Installation and Servicing Instructions

Alpha 240X

Wall Mounted, Fan Assisted, Room Sealed, Gas Fired Combination Boiler

For Technical help or for Service call ...
ALPHA HELPLINE
Tel: 0870 3001964

Alpha
HEATING INNOVATION

Nepicar House, London Road,
Wrotham Heath, Sevenoaks,
Kent TN15 7RS

British Gas
Service Listed

CE 0051

Alpha 240X G.C. No. 47 532 13

WATER BYELAWS SCHEME WRc APPROVED PRODUCT

For use with Natural Gas only

Leave these instructions with the User

CONTENTS

1 Introduction 2
2 Technical data 3
3 General boiler information 6
4 Installation 10
5 Commissioning 15
6 Boiler operation 17
7 Routine servicing 18
8 Component replacement 19
9 Wiring diagrams 29
10 Fault finding 31
11 Short parts list 35
12 Service history 36

1 INTRODUCTION

The Alpha 240X boiler is a wall mounted, fan assisted room-sealed combination boiler. Heat output is controlled by a modulating gas valve and it uses a permanent pilot for lighting the burner.

The boiler, providing both central heating and domestic hot water at mains pressure, is designed for use with a fully pumped, sealed and pressurised heating system using **only Natural Gas**.

The boiler is supplied with a pump, diverter valve, pressure relief valve, expansion vessel and pressure gauge fully assembled and tested.

As supplied, the boiler will automatically modulate to provide central heating outputs between 9.3 and 23.3 kW (31 700 and 79 500 Btu/h).

The maximum output available for domestic hot water is 23.3 kW (79 500 Btu/h), capable of providing 9.5 litres/min with a temperature rise of 35°C.

IMPORTANT

It is the law that all gas appliances are installed by a competent person, ie CORGI registered personnel, in accordance with the following recommendations:-

Gas Safety (Installation and Use) Regulations

All relevant Building Regulations issued by the Department of the Environment

Building Standards (Scotland) (Consolidation) Regulations issued by the Scottish Development Department

Local Water Bye Laws

Health & Safety Document No. 635 (The Electricity At Work Regulations 1989)

The installation should also be in accordance with the following British Standard Codes of Practice:-

BS 5440:1:1990	Flues
BS 5449:1990	Forced circulation hot water systems
BS 5546:1990	Installation of hot water supplies for domestic purposes
BS 6700:1987	Design, installation, testing and maintenance of services supplying water
BS 6798:1987	Installation of gas fired hot water boilers
BS 6891:1989	Gas installation
BS 7593:1992	Code of Practice for treatment of water in heating systems
BS 7671:1992	Requirements for electrical installations, IEE Wiring Regulations

If installation is in a timber framed building, refer to the British Gas publication 'Guide for Gas Installations in Timber Frame Housing' reference DM2.

This appliance meets the requirements of IP20, ie degree of protection against moisture.

Failure to install this appliance correctly could lead to prosecution. It is in your own interest and that of safety to ensure that the law is complied with.

Manufacturer's instructions must **NOT** be taken in anyway as over-riding statutory obligations.

Note: Ensure that the Benchmark Log Book has been completed after the boiler has been installed and commissioned.

2 TECHNICAL DATA

2.1 PERFORMANCE - NATURAL GAS

Central Heating			MAX.	MIN.
Heat Input		kW	28.63	11.76
(Gross)		Btu/h	97 700	40 150
Heat Output (modulating)		kW	23.3	9.3
		Btu/h	79 500	31 700
Burner Pressure Settings	Room sealed chamber panel fitted	mbar	9.6	1.1
		in wg	3.84	0.44
	Room sealed chamber panel removed	mbar	10.6	2.1
		in wg	4.24	0.84
Gas Rate		m³/h	2.74	1.13
		ft³/h	96.76	39.9

Domestic Hot Water			MAX.	MIN.
Heat Input		kW	28.63	11.76
(Gross)		Btu/h	97 700	40 150
Output to Water (modulating)		kW	23.3	9.3
		Btu/h	79 500	31 700
Burner Pressure Settings	Room sealed chamber panel fitted	mbar	9.6	1.1
		in wg	3.84	0.44
	Room sealed chamber panel removed	mbar	10.6	2.1
		in wg	4.24	0.84
Gas Rate		m³/h	2.74	1.13
		ft³/h	96.76	39.9
Flow Rate at 35°C Rise		L/min	9.5	
		G.P.M.	2.1	

2.2 SYSTEM

Central Heating (Sealed System)		
Max. System Pressure		2.5 bar
Min. System Pressure		0.5 bar
Max. System temperature		82°C
Pressure Relief Valve Setting		3 bar (44 PSI)
Expansion Vessel Size (pre-charge press.)		8 L at 0.8 bar
Flow Connection		22 mm
Return Connection		22 mm
Relief Valve Connection		15 mm
Recommended System Pressure (cold)		1.0 bar
CH Water Temp. (Approx. max.)	°C	82
	°F	180

Domestic Hot Water		
Max. Mains Inlet Water Pressure		8 bar
Min. Mains Water Pressure		0.2 bar
Min. DHW Flow Rate		2.5 l/min
Mains Inlet Connection		15 mm
DHW Outlet Connection		15 mm
DHW Water Content		0.17 L
Outlet Water Temp. (Approx. max.)	°C	62
	°F	144

2.3 COMPONENTS

Burner (15 blade)	Stainless steel
Main Heat exchanger	Copper
DHW Heat Exchanger	Stainless Steel
Main Burner Injectors	1.18 mm
Pilot Injector	0.27 mm
Flue - Outer Duct	Epoxy coated
Flue - Inner Duct	Aluminium

2.4 INSTALLATION

Min. Clearances for Servicing	Top	220 mm
	Bottom	250 mm
	Sides	5 mm
	Front	450 mm
Flue Terminal Size		100 mm Dia.
Flue Terminal Protruding		115 mm
Hole Size Required For Flue Assy.		107 mm Dia.
Lift Weight		39 kg

2.5 GENERAL

Dimensions	Height	900 mm
	Width	450 mm
	Depth	360 mm
Gas Connection		22 mm
Primary Water Content		1.7 L
Air Duct Diameter		100 mm
Flue Duct Diameter		60 mm

2.6 ELECTRICAL

Supply	230/240 V ~ 50 Hz
External Fuse	3 A
Power Consumption	170 W
Internal Fuse	F2 A
Electrode Spark Gap	5 mm
Thermocouple:- min. closed circuit output	10 mV

2.7 FLUE LENGTHS

Flue length = 0.75 m (not including the terminal, which is supplied with the boiler)

Note: Additional flues (of the same length) are available.

Length of Flue Required:-

Rear Flue = wall thickness +150 mm

Side Flue = wall thickness + distance between wall and side of boiler + 185 mm

Vertical Flue = distance from top of boiler side panel to required roof position minus 1 m for vertical terminal assembly

Maximum flue length = 4 m

Each additional 90° Bend is equivalent to 1 m of flue length

Each 45° Bend is equivalent to 0.5 m of flue length

The Vertical Flue terminal assembly is equivalent to 1 m of flue length

2.8 AVAILABLE PUMP HEAD FOR CENTRAL HEATING

Output		Available pump head				Flow rate				Pressure loss across boiler			
kW	Btu/h	17°C		20°C		17°C		20°C		17°C		20°C	
		metres	feet	metres	feet	litre/min	gal/min	litre/min	gal/min	metres	feet	metres	feet
23.3	79 500	2.33	7.7	2.95	9.7	18.10	4.00	15.10	3.32	2.50	8.2	2.25	7.4
17.58	60 000	3.00	9.8	3.45	11.3	14.80	3.27	12.60	2.78	2.20	7.2	2.00	6.6
14.65	50 000	3.45	11.3	3.75	12.3	12.36	2.72	10.50	2.32	2.00	6.6	1.75	5.7
11.63	40 000	3.85	12.6	4.05	13.3	9.89	2.18	8.40	1.85	1.70	5.6	1.50	4.9
9.3	31 700	4.20	13.8	4.35	14.3	7.84	1.73	6.70	1.47	1.45	4.8	1.35	4.4

This information is based on 17°C and 20°C system design temperature difference.

2.9 ELECTRICAL CONNECTIONS

Note: This Appliance Must Be Earthed

An optional integral Clock kit is available if required.

Not Used	Black Wire	Black Wire	Brown Wire	Blue Wire
5	4	3	2	1

Internal Clock Terminals

WARNING

1. Ensure wires are connected correctly
2. Only fit the Alpha recommended clock. Other clocks could cause damage.

Clock connections

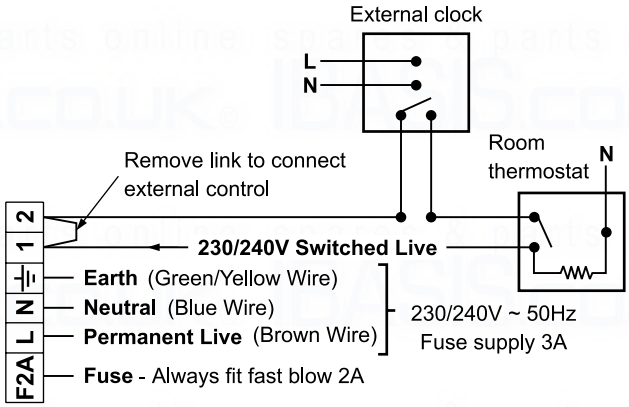

Boiler terminal block

Fig. 1

2.10 BOILER SCHEMATIC - Alpha 240X

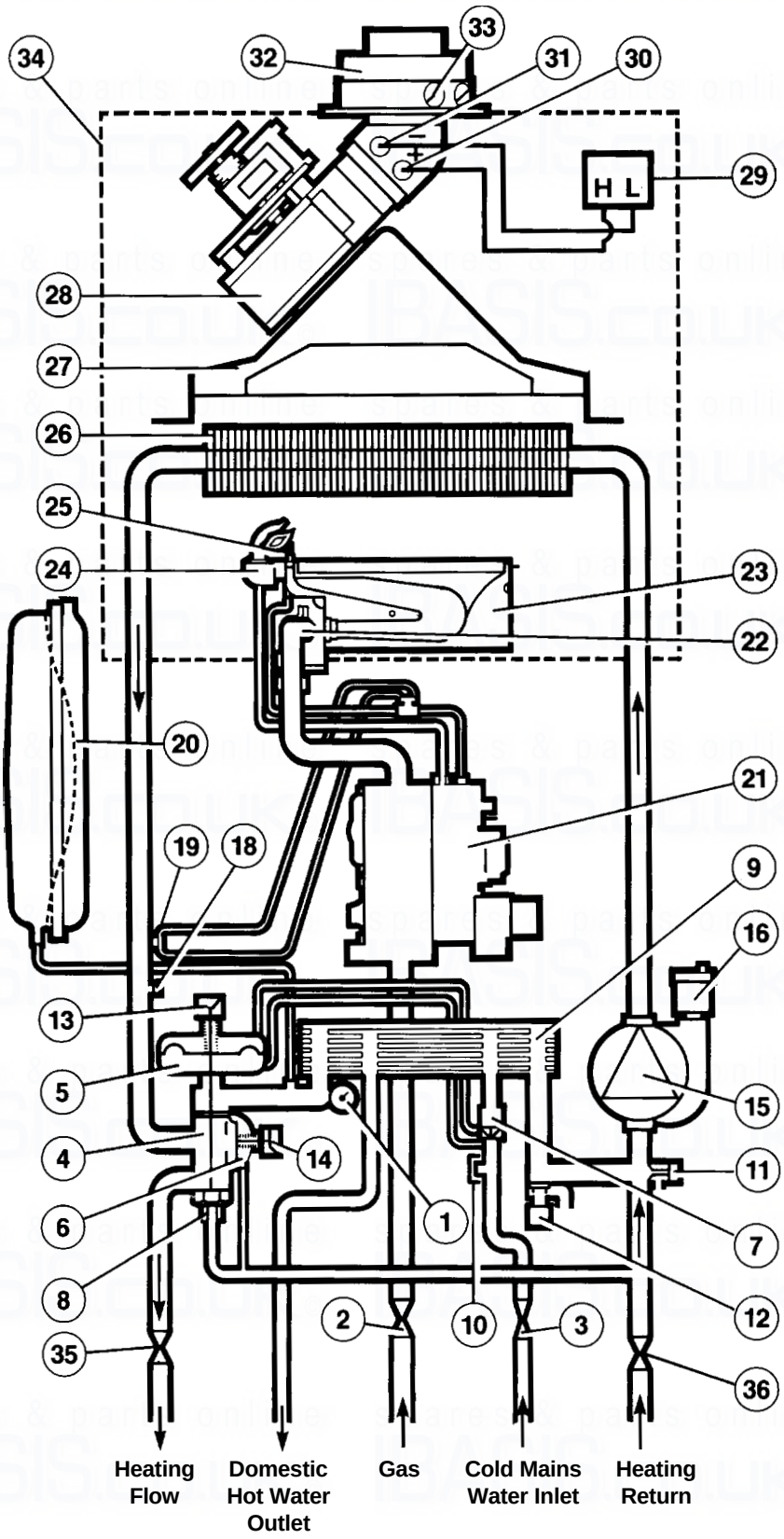

1 - Pressure gauge
2 - Gas service cock
3 - Mains inlet on/off valve and filter
4 - Diverter valve assy.
5 - DHW flow valve
6 - Primary flow valve
7 - Differential pressure sensor
8 - Automatic by-pass
9 - DHW heat exchanger
10 - DHW expansion device (if fitted)
11 - Drain point
12 - Pressure relief valve
13 - DHW flow valve microswitch
14 - Primary flow valve microswitch
15 - Pump and air separator
16 - Automatic air vent
17 - Not applicable
18 - Primary temperature sensor
19 - Overheat thermostat
20 - Expansion vessel
21 - Gas valve
22 - Main burner injector
23 - Main burner
24 - Pilot burner
25 - Thermocouple
26 - Main heat exchanger
27 - Flue hood
28 - Fan
29 - Air pressure switch
30 - Positive pressure point
31 - Negative pressure point
32 - Flue adaptor
33 - Flue sample point
34 - Room sealed chamber
35 - On/off valve
36 - On/off valve and filter

Fig. 2

3 GENERAL BOILER INFORMATION

3.1 GAS SUPPLY

The boilers require a gas rate of 2.74 m^3/h (96.76 ft^3/h).

The meter and supply pipes must be capable of delivering this quantity of gas in addition to the demand from any other appliances in the house. The boiler requires at least a 22 mm gas supply pipe.

The complete installation, including the meter, must be tested for gas soundness and purged as described in BS 6891.

3.2 ELECTRICAL SUPPLY

The boiler requires a 230/240 V ~ 50 Hz mains supply, fused at 3 A

The boiler must be earthed.

There must only be one common isolator, providing complete electrical isolation, for the boiler and any external controls.

Using PVC insulated cable not less than 0.75 mm^2 (24 x 0.2 mm) to BS 6500 Table 16, the boiler should be connected to a fused three pin plug and unswitched shuttered socket outlet (both complying with BS 1363), or a fused double pole switch with a contact separation of at least 3 mm in both poles.

Wiring external to the boiler must be in accordance with the current IEE Wiring Regulations (BS 7671).

Note: If a room thermostat is fitted, it must be suitable for 230/240 V switching.

3.3 AIR SUPPLY

The boiler does not require any air vents for cooling in the room in which it is installed or when installed in a cupboard or compartment. The minimum clearances for servicing must always be maintained.

Note: A cupboard or compartment used to enclose the boiler must be designed and constructed specifically for the purpose, i.e. comply with the Building Regulations.

3.4 FLUE SYSTEM - Fig. 3

The flue system must be installed in accordance with BS 5440:1.

The flue assembly supplied for the boiler is 0.75 m in length.

For horizontal flues ensure there is a slight downward slope towards the terminal.

Additional flue components are available as follows:-

0.75 m flue
90° bend
45° bend
Vertical flue terminal assembly. Refer to the separate installation instructions supplied with the assembly.
A twin pipe flue system and an easy flue system are available for use with the boiler. Refer to the separate instructions for details.

The following methods determine the correct length of flue required.

For rear exit flue L = B + 150 mm

For side exit flue L = B + C + 185 mm (min. side clearance required is 5 mm)

For vertical flue L = H minus 1000 mm for vertical terminal assembly

Where L = Required flue length
B = Finished wall thickness
C = Distance from the inside wall to the side of the boiler
H = Distance from top of boiler side panel to roof position

Note:
1. If an extra 90° bend is used, this reduces the maximum flue length by 1 m. Each 45° bend used reduces the maximum flue length by 500 mm.
2. Under no circumstances must the flue length (including allowances for extra bends) exceed 4 metres.
3. Failure to use Alpha flue components with the boiler will invalidate the boilers CE approval, warranty and may be unsafe.

HORIZONTAL FLUE OPTIONS - Lmax = 4 metres

L = B + C + 185 mm

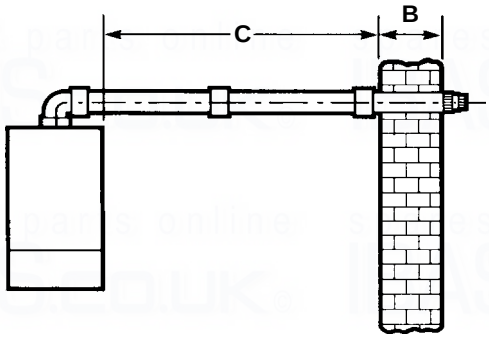

L = B + C + E + 185 mm

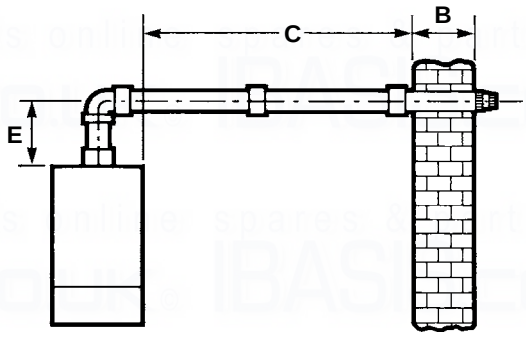

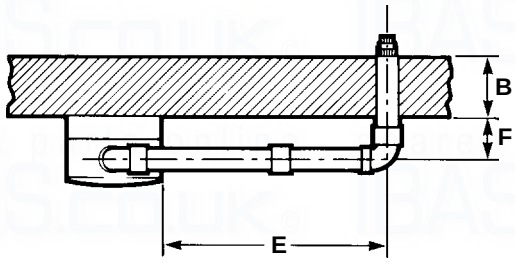

L = B + E + F + 185 mm + (90° bend = 1 metre)

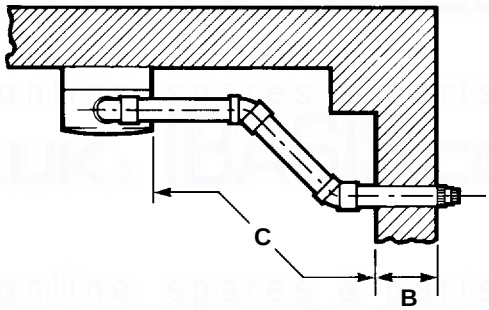

L = B + C + 185 mm + (2 x 45° bends = 1 metre)

VERTICAL FLUE OPTIONS

Hmax = 4 metres

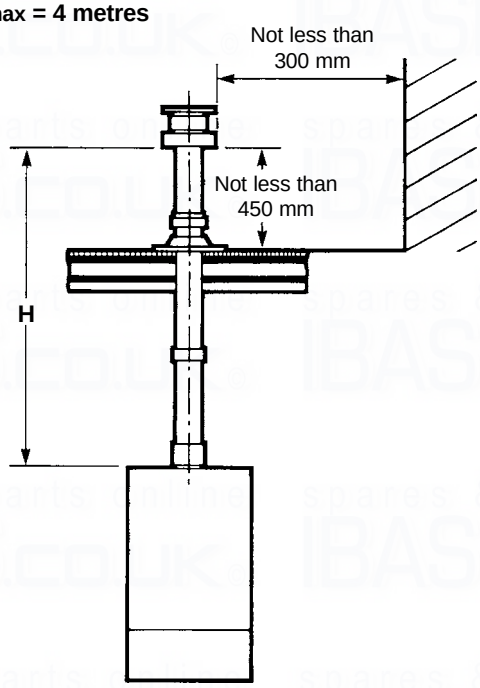

Hmax = 3 metres

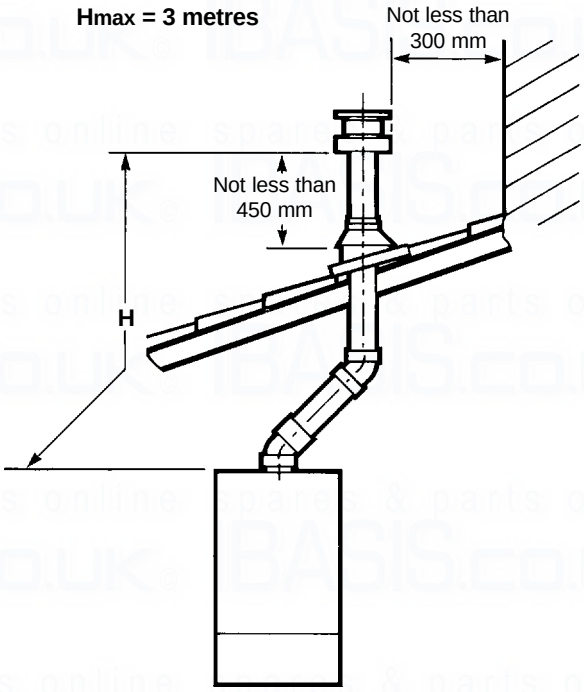

Fig. 3

3.5 FLUE TERMINAL LOCATION - Fig. 4

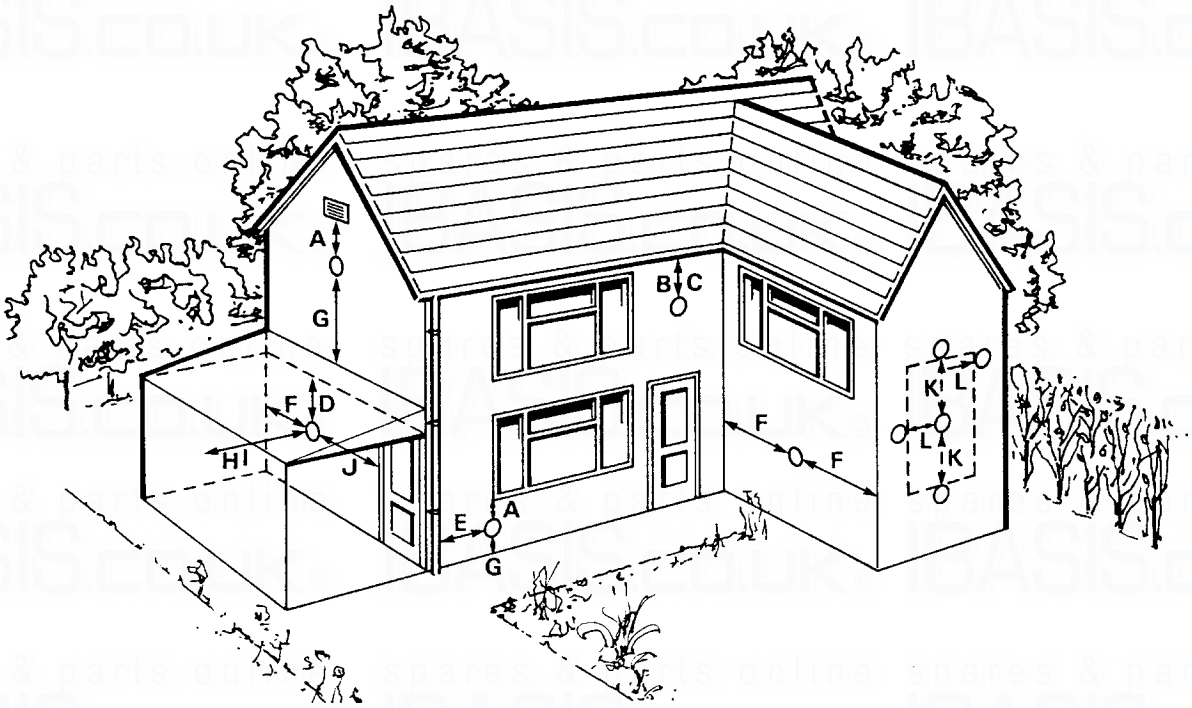

Fig. 4

	Terminal position	Min. distance
A	Directly below an opening, air brick, windows, etc.	300 mm
B	Below gutters, soil pipes or drain pipes	75 mm
C	Below eaves	25 mm
D	Below balconies or car port roof	25 mm
E	From a vertical drain pipe or soil pipe	25 mm
F	From an internal or external corner	25 mm
G	Above ground, roof or balcony level	300 mm
H	From a surface facing the terminal	600 mm
I	From a terminal facing the terminal	1200 mm
J	From an opening in the car port (e.g. door, window) into dwelling	1200 mm
K	Vertically from a terminal on the same wall	1500 mm
L	Horizontally from a terminal on the same wall	300 mm

The flue terminal must be exposed to the external air and the position must allow the free passage of air across it at all times. In certain weather conditions the terminal may emit a plume of steam. Avoid positioning the terminal where this may cause a nuisance.

If the terminal is fitted within 850 mm of a plastic or painted gutter or 450 mm of painted eaves or 300 mm of a plastic car port roof, an aluminium shield at least 1 m long should be fitted to the underside of the gutter or painted surface. If the terminal is fitted less than 2 m above a surface to which people have access, the terminal must be protected by a terminal guard.
A suitable guard (type K3 - G.C. No. 393 554) is available from:
Tower Flue Components Ltd., Vale Rise, Tonbridge, Kent TN9 1TB

3.6 BOILER LOCATION

The boiler is not suitable for external installation.

The boiler must be installed on a flat vertical wall which is capable of supporting the weight of the boiler.

If the boiler is to be fitted in a timber framed building, it should be fitted in accordance with the British Gas publication 'Guide for Gas Installations in Timber Frame Housing', reference DM2.

The boiler may be installed in any room or internal space, although particular attention is drawn to the requirements of the current IEE Wiring Regulations, and in Scotland, the electrical provisions of the Building Regulations applicable in Scotland, with respect to the installation of the boiler in a room or internal space containing a bath or shower. Where a room-sealed boiler is installed in a room containing a bath or shower, it must not be possible for a person using the bath or shower to touch any electrical switch or boiler control utilising mains electricity.

The boiler may be installed in a cupboard or compartment, provided it is correctly designed for that purpose, i.e. complies with the Building Regulations and the requirements of BS 6798.

3.7 CENTRAL HEATING SYSTEM - Fig. 5

The boiler is designed for use in a sealed central heating system in accordance with the requirements of BS 5449 and BS 6798. The system should be designed to operate with flow temperatures of up to 82°C. When designing the system, the pump head, expansion vessel size, mean radiator temperature, etc. must all be taken into account. Refer to the pump performance table for guidelines.

System volume - The expansion vessel incorporated into the boiler is suitable for a sealed heating system with a maximum water content of 80 litres (18 gal). Above that, consideration should be given to fitting an additional expansion vessel fitted in the position shown in Fig. 5. To check correct operation of the expansion vessel(s) the system pressure should not be more than 2.5 bar when the system is at maximum operating temperature (for further guidance refer to BS 7074:1).

The boiler is supplied with the following components built in:-

Pressure relief valve - complying with BS 6759 and set to operate at 3 bar. The discharge pipe must be routed clear of the boiler to a drain, in such a manner that it can be seen, but cannot cause injury to persons or property.

Pressure gauge - To indicate the system pressure to be maintained.

Expansion vessel - Conforming to BS 4814 with a capacity of 8 litres and pre-charged to a pressure of 0.8 bar.

By-pass - Where all radiators are fitted with thermostatic radiator valves an external by-pass may be required.

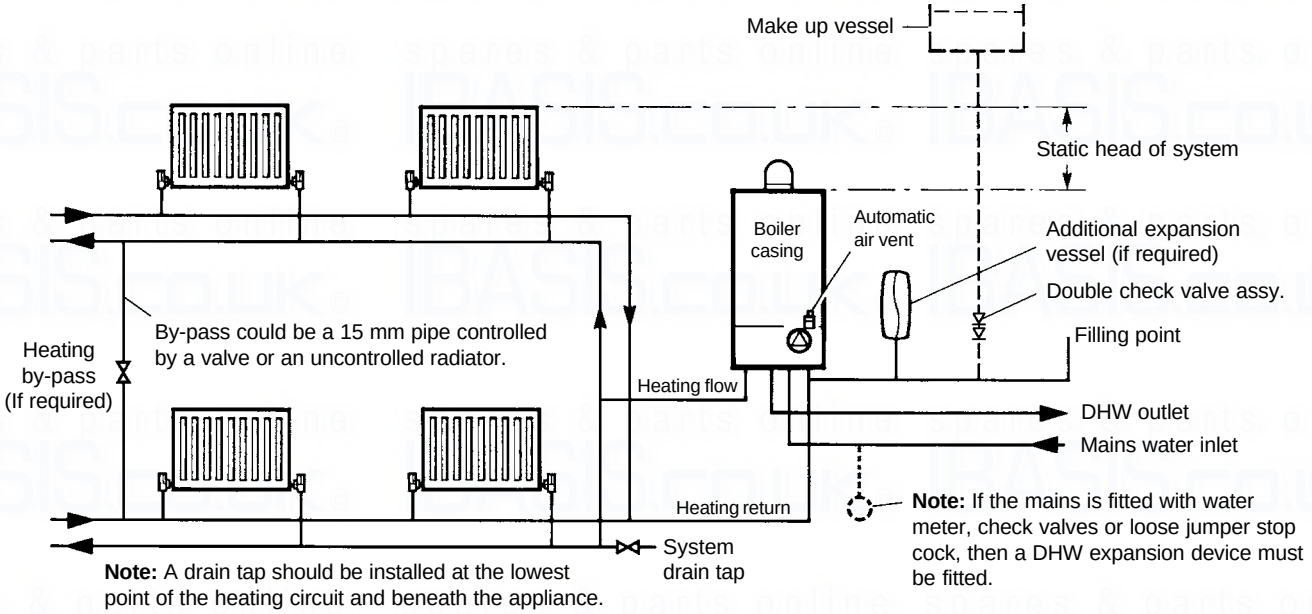

Fig. 5

3.8 FILLING THE CENTRAL HEATING SYSTEM - Figs. 6, 7

The system design pressure (cold) should be set to 1.0 bar. This pressure is equivalent to a static head (see Fig. 5) of 10.2 metres of water.

Provision should be made to replace water lost from the system. This can be by manual or automatic means, as shown in Figs. 6 and 7. The position for connecting an automatic make-up vessel is indicated in Fig. 5. A double check valve assembly must be used, as shown in Fig. 7.

Filling of the system must be carried out in a manner approved by the local Water Undertaking. Where allowed, the system may be filled via a temporary connection as shown in Fig. 6. After filling, always disconnect the flexible hose of the filling loop.

All fittings used in the system must be able to withstand pressures up to 3 bar.

Drain taps (to BS 2879) must be used to allow the system to be completely drained.

The heating system should be thoroughly flushed before the boiler is connected and again after the first heating.

If it is required to add inhibitor to the system, refer to Alpha Therm Ltd. for guidance.

Refer to BS 5449 and BS 6798 for further information.

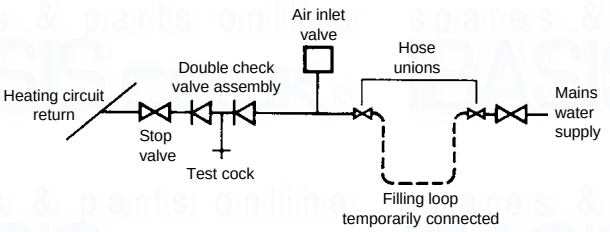

Fig. 6

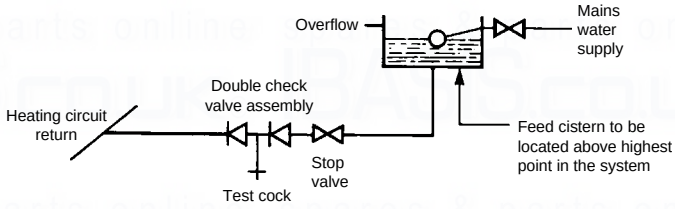

Fig. 7

3.9 DOMESTIC HOT WATER SYSTEM

The minimum flow rate needed for the flow switch and burner to operate is 2.5 litres/min.

The incoming mains water pressure should be between 0.2 and 8 bar to ensure efficient operation. If the pressure is above 7 bar a pressure reducing valve must be fitted.

To ensure economic use, the pipe runs between the boiler and taps should be in 15 mm copper pipe and be as short as possible. Where possible the pipework should be insulated to reduce heat loss.

All taps and mixing valves used with the hot water system must be suitable for operating at a mains pressure of up to 8 bar.

Showers - A shower may be used with the boiler if required.
If a loose or flexible head type shower is used it may require the fitting of a double check valve, to comply with Water Bye Law 17.

Bidets - No anti-syphonage arrangements are necessary, provided the outlets are shrouded and it is not possible to attach a temporary hand held spray. A supply of direct mains fed hot and cold water is permitted provided the appliance is of the over-rim flushing type.

Before the mains water supply pipe is connected to the boiler, it should be thoroughly flushed out to avoid the danger of dirt or foreign matter entering the boiler.

The mains water supply connection to the boiler must be the first connection from the mains supply.

Note: The boiler has been provided with the facility for fitting an expansion device, i.e. shock arrestor or expansion vessel in the DHW circuit (see Fig. 32). An optional kit is available from Alpha Therm Ltd., Goldsel Road, Swanley, Kent BR8 8EX.

If the mains water supply has been fitted with check valves, water meter or a loose jumper stop cock, then an expansion device must be fitted.

4 INSTALLATION

4.1 UNPACKING

1. The boxes required when the boiler is installed with a horizontal flue are as follows:-

   Box 1 Cased boiler
   Water and gas valves plus washers
   Water fittings
   Mounting bracket plus screws and wall plugs
   Flue terminal and flue sealing collar plus 2 screws
   Literature pack and Wall template

   Box 2 90° flue bend with clamp (not required for vertical flue)

   Box 3 0.75 m flue (for side and rear flue) with two clamps and inner duct support
2. Unpack boiler and remove loose items packs.
3. Remove the two screws at the top of the front casing. Slide it up and lift it off.

4.2 CLEARANCES REQUIRED - Fig. 8

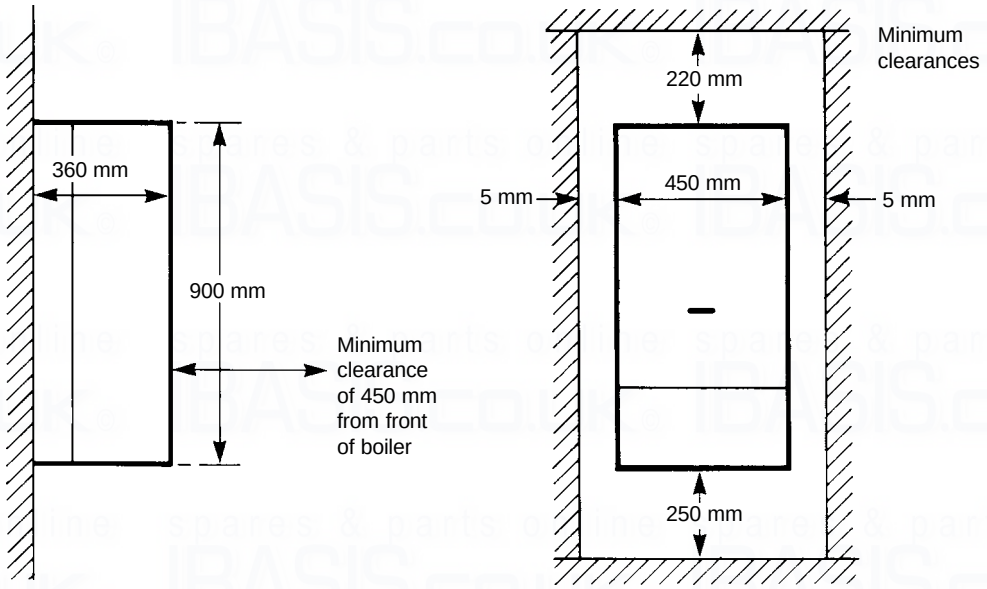

Fig. 8

4.3 PREPARE THE WALL - Figs. 9, 10

1. Decide upon the position of the boiler taking into account the clearances required for servicing and the flue terminal position.
2. Tape the template to the wall (ensure it is level and the right way up) and mark the position of the holes for the boiler mounting bracket and bottom fixings. If rear exit flue is used, mark the position of the hole for the flue.
   Note: If pipework is routed at the rear of the boiler (top pipe connections), mark the four fixing holes shown in Fig. 10.
3. **Side exit flue -** Continue the horizontal centre line of the flue across the wall to the side wall, then along the side wall 190 mm (ensure the lines are horizontal). This will give the position of the centre of the hole for the flue.
4. Cut the 110 mm diameter hole (or use a 107 mm core drill) in the wall for the flue.
   Note: For internal fitting of the flue, using the flue sealing collar supplied, cut a 127 mm dia. flue hole using a 127 mm core drill.
5. Drill the fixing holes (8 mm dia.) to accept the No.10 plugs supplied. Using the washers supplied with the screws, fit the mounting bracket.
   Note: When pipework is routed at the rear of the boiler, i.e. top pipe connections the mounting bracket is not used. (Refer to Fig. 10). Fit the top fixing screws, leaving just enough protruding, to hang the boiler on.
6. **Top pipe connections -** Remove the mounting cross bar from the rear of the boiler and fit it to the top as shown in Fig. 10.

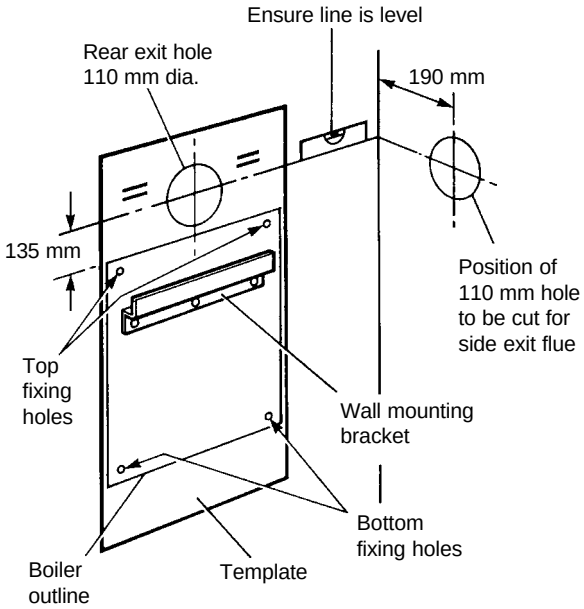

Fig. 9

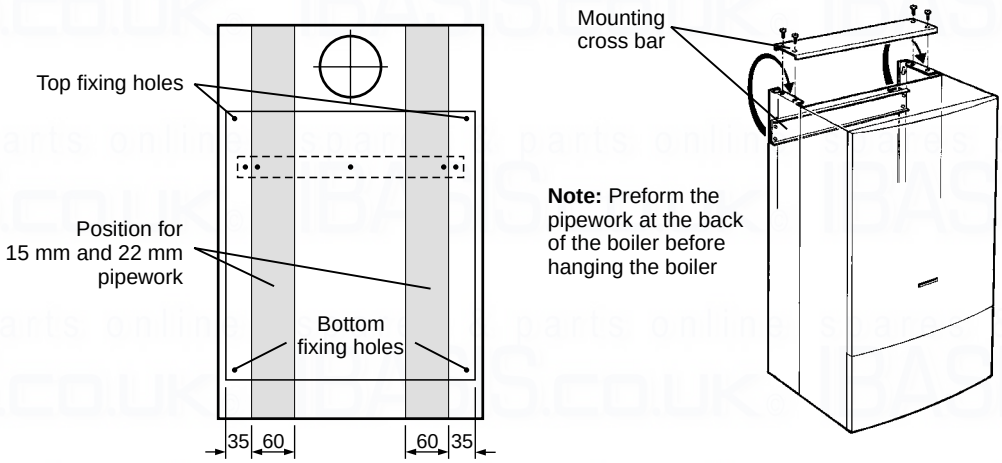

Fig. 10

4.4 FIT THE BOILER - Refer to Fig. 9

1. Lift the boiler and locate it on the mounting bracket or the top fixing screws when piping from above.
2. Adjust the position of the boiler, as necessary. Fit the bottom screws to secure the boiler in position (do not forget to tighten the top screws when piping from above).

4.5 CONNECT THE PIPEWORK - Fig. 11

1. Thoroughly flush out all the water pipework.
   Note: Ensure that all the plastic caps are removed from the boiler connections.
2. Secure all the valves/fittings to the boiler- use the washers supplied, ensuring they are facing the rear wall. Fit the union bends to the valves.
   Note: 1. If soldering to the boiler union bends, ensure the bends are not connected to the valves, otherwise the internal seals may be damaged.
   2. Ensure the 22 mm isolating valve with the filter is fitted to the heating return connection. (Refer to Fig. 11).
   3. Fit the pressure relief valve connection before the isolating valves.
3. Connect the system pipework to the boiler.
   Note: Do not forget that the pressure relief valve discharge pipe must be routed clear of the boiler to a drain in such a manner that it may be seen, but cannot cause injury to persons or property.
4. Ensure that all the valves are closed (spindle flats at right angles to valve) and do not turn on the water or gas supplies at this stage.

A - Heating flow (22 mm)
B - Hot water outlet (15 mm)
C - Gas inlet (22 mm)
D - Cold water mains inlet (15 mm)
E - Heating return (22 mm)
F - Pressure relief valve (15 mm)

Note: Both Heating return and Cold water mains inlet valves contain serviceable filters.

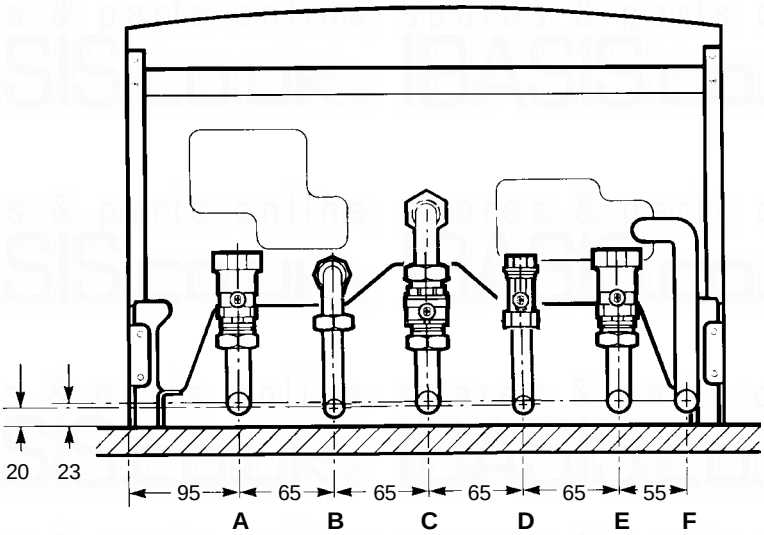

Fig. 11

4.6 FIT THE FLUE - Figs. 12, 13

1. The following procedure applies to both rear or side exit flue. The only difference being the lengths to which the ducts are cut.
   Rear flue Outer air duct length = finished wall thickness + 110 mm.
   Inner flue duct length = finished wall thickness + 147 mm.
   Side flue Outer air duct length = finished wall thickness + the distance from the inside wall to the side of the boiler + 145 mm.
   Inner flue duct length = finished wall thickness + the distance from the inside wall to the side of the boiler + 182 mm.
2. If the overall length of the inner duct is greater than 750 mm then a flue extension is required. To fit an extension refer to the following section.
3. Withdraw the inner flue duct from the outer air duct.
4. Mark the outer air duct to match the length given above, measure from the end of the tube as shown in Figs. 12 and 13.
5. Mark the inner flue duct to match the length given above.
6. Cut both the inner and outer ducts to length.
   Note: Do not cut the outer duct end with the two holes, these are for securing the terminal.
   Ensure that all cuts are square and burr free.
7. Fit the flue terminal to the outer duct by inserting it into the end with two holes. Align the holes and secure with the two screws provided.
8. Place the inner flue duct back into the outer duct.
9. Pass the flue assembly through the wall (from inside or outside).
   Note: Internal fitting - If there is no access to make good the outside wall, locate and secure the flue sealing collar onto the outer duct of the flue immediately before the terminal. Push the flue assembly through the 127 mm flue hole, so that the collar completely passes through the wall. Then pull the flue assembly back into the correct position. Visually check that the collar is sealing the outside wall and that it is not restricting any of the openings of the flue terminal.
10. Position the seal and clamp (two screws), supplied with the bend, over the boiler flue adaptor. Fit the bend and rotate to the correct position, then secure in position. See Fig 12.
    Note: Ensure that the seal is located over both the bend and the flue adaptor.
11. Place the inner (no seal) duct clamp in position over the bend outlet as shown in Figs. 12 and 13, and position the outer duct seal over the bend.
12. Push the outer duct into the wall slightly at the same time as pulling the inner duct towards the bend, inserting it fully into the clamp on the bend. Tighten the clamp to secure the inner duct.
    Note: Ensure the inner duct clamp screwed joint is at the bottom.
13. Pull the outer duct towards the bend. Check that the flue terminal protrudes 120 mm out of the wall, then position the seal equally over the joint between the bend and the outer duct. Dismantle the clamp, position it over the seal and secure in position.
14. Make good the inside and outside walls. The flue sealing collar could be used for making good either the outside or inside by locating it over the outer duct of the flue and pushing it tight against the wall. If fitting the collar externally, ensure it does not restrict any of the openings of the flue terminal.

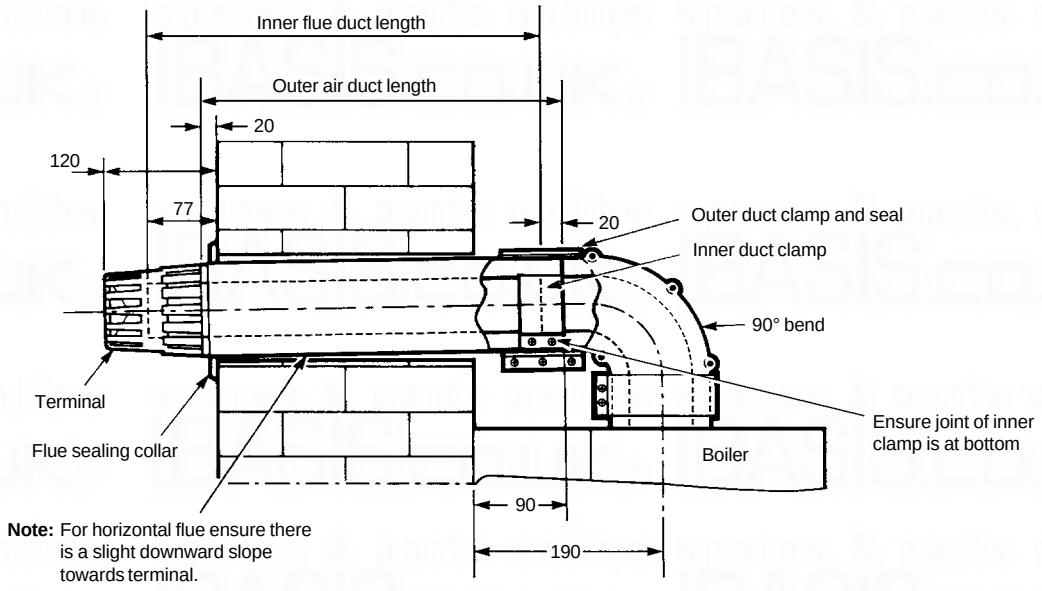

Fig. 12 - Rear flue

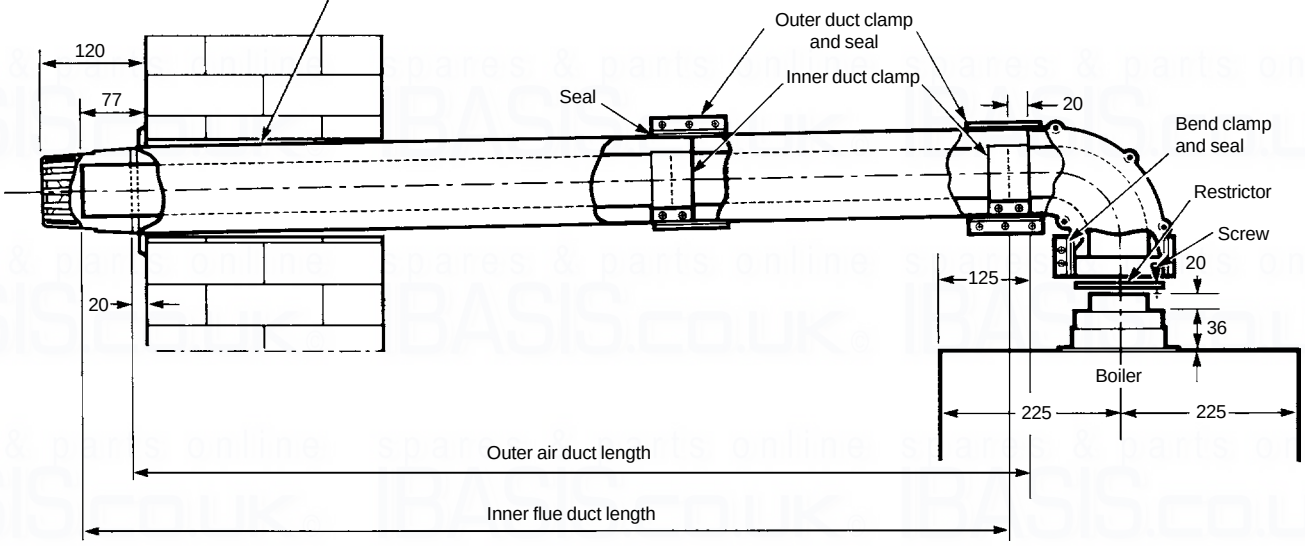

Fig. 13 - Side flue

4.7 FIT A FLUE EXTENSION - Figs. 12, 13

Note: **1.** The maximum flue assembly length must not exceed a length of 4 metres.
2. If the flue is more than 1 m, the restrictor must be removed from the flue adaptor (see Fig. 13), by removing the screw and lifting out the restrictor.

1. Withdraw the inner flue duct from the outer air duct supplied with the boiler.
2. Withdraw the inner flue duct from the extension. Secure the two ducts together using the clamp supplied with the extension, ensure that the ducts are butted together and the clamp is central over the joint.
3. Secure the outer ducts together using the silicone seal and clamp supplied with the extension. Lubricating the silicone seal with a soap solution will aid assembly.
4. With all the ducts assembled together, cut to the following lengths:-
   Rear flue Outer air duct length = finished wall thickness + 110 mm.
   Inner flue duct length = finished wall thickness + 147 mm.
   Side flue Outer air duct length = finished wall thickness + the distance from the inside wall to the side of the boiler + 145 mm.
   Inner flue duct length = finished wall thickness + the distance from the inside wall to the side of the boiler + 182 mm.
5. When measuring the outer duct, measure from the end of the tube as shown in Figs. 12 and 13.
6. Cut both the inner and outer ducts to length.
   Note: Do not cut the outer duct end with the two holes, these are for securing the terminal.
   Ensure that all cuts are square and burr free.

7. Fit the flue terminal to the outer duct by inserting it into the end with two holes. Align the holes and secure with the two screws provided.
8. Place the inner flue duct back into the outer duct. Use the inner duct supports to centralise the duct in the outer duct.
9. Fit the flue assembly as described in the previous section. Due to the size of the flue clamps the flue must be fitted from inside the building.
10. It may be necessary to support the flue with suitable brackets (every metre) when flue lengths approaching the maximum are used.

4.8 CONNECT THE MAINS SUPPLY - Fig. 14

1. Gain access to the boiler terminal block by lowering the front cover and removing the two fixing screws (one each side) securing the control panel. Close the front cover, raise the complete control panel slightly, hinging it forward at the same time. Refer to Technical Data, section 2.9 for connection details.
2. Remove the screw securing the terminal block cover from the back of the control box (see Fig. 14). Pass the mains supply cable through the cable clamp and connect as follows:- Brown to L, Blue to N and Green/Yellow to ⏚. Ensure correct polarity.
   Note: Ensure that the length of the earth wire is such that if the supply cable is pulled out of its clamp the live and neutral wires become taut before the earth wire.
   The main terminal block can be removed by pulling it off the pins to give easy access to the terminals.
   Do not switch on the electrical supply at this stage.

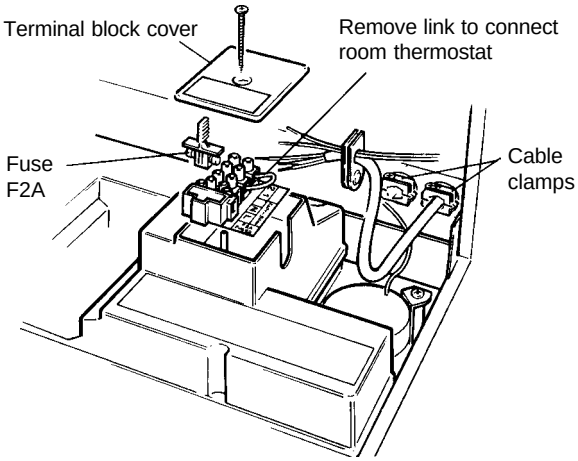

Fig. 14

3. If an external control, i.e. room thermostat or external clock is to be fitted, remove the terminal block cover and remove the link between terminals 1 and 2. Pass the cable through the cable clamp, through the grommet (cut as necessary) and connect it to terminals 1 and 2. Replace the terminal block cover. (Refer to section 2.9).
4. Replace the terminal block, ensuring it is located correctly on the plastic pins and replace the cover.
5. Ensure that there is sufficient free cable to allow the control panel to be raised and lowered then tighten the cable clamp screws.
6. Leave the control panel open until commissioning procedures have been completed.
7. Carry out electrical system checks - Short circuit, Polarity, Earth continuity and Resistance to earth with a suitable multimeter.

4.9 FIT THE CLOCK KIT - Fig. 15

Ensure the electrical supply to the boiler is isolated.

1. Remove the five screws securing the rear cover of the control panel and carefully raise the cover from the front.
2. Remove the ignition PCB as described in section 8.16.
3. Remove and discard the clock blanking panel.
4. Insert the clock into the opening and secure in place with the screws supplied.
5. Disconnect the clock wiring from the terminal block and connect it to the clock as follows:-
   Blue wire to terminal 1, Brown wire to terminal 2 and Black wires to terminals 3 and 4, (or as per the instructions supplied with the clock). Ensure wiring is correct.
6. Re-assemble in reverse order. When replacing the rear cover, ensure no wires are trapped and all wiring grommets are in position. Do not overtighten the fixing screws.
7. Leave the control panel open until commissioning procedures have been completed.

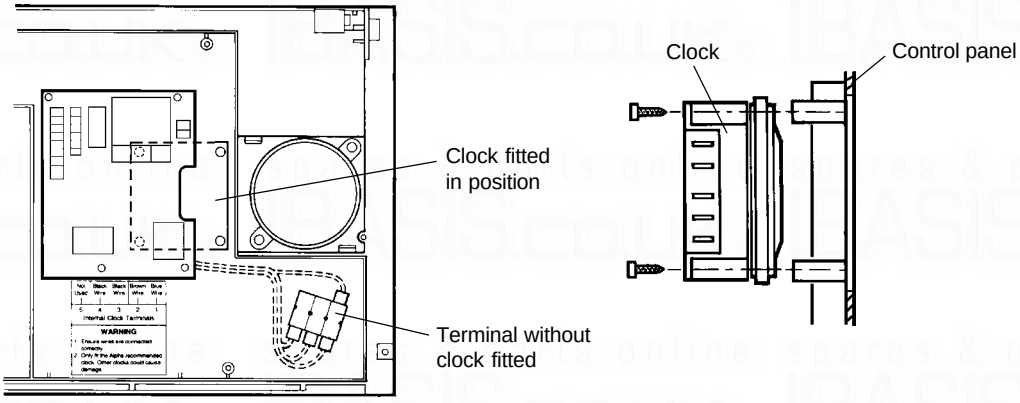

Fig. 15

5 COMMISSIONING

When commissioning the boiler, ensure the Benchmark Log Book is completed.

5.1 FILL THE SYSTEM

1. The boiler is fitted with an automatic air vent positioned on the pump (see Fig. 2). The vent is fitted with a non-sealing cap.
2. Open the central heating flow and return valves (spindle flats in-line with valve) (see Fig. 11).
3. Open the fill point valve on the filling loop until water is heard to flow. To aid venting, the boiler drain point (see Fig. 32) may be opened until water flows out. Close the drain point as soon as water appears.
4. To remove the air - Vent each radiator in turn, starting with the lowest in the system.
5. It is important that the pump is properly vented to avoid it running dry and damaging its bearings. Unscrew and remove the cap from the centre of the pump. Using a suitable screwdriver rotate the exposed spindle about half a turn, then replace the cap.
6. Check the operation of the pressure relief valve (see Fig. 32) by turning the head anti-clockwise until it clicks. The click is the valve lifting off its seat allowing water to escape from the system - check that this is actually happening.
7. Continue to fill the system until the pressure gauge indicates 1.0 bar. Close the fill point valve and check the system for water soundness, rectifying where necessary. Disconnect the filling loop from the mains supply.
   Water may be released from the system by manually operating the drain point (see Fig. 32) until the system design pressure is obtained. The system design pressure (cold) should be between 0.75 and 1.25 bar.
   Refer to sections 3.7 and 3.8. System volume and Filling the system.
8. Open the mains water inlet valve (see Fig. 11). Turn on all hot water taps and allow water to flow until no air is present. Turn off taps.

5.2 BOILER CONTROLS - Fig. 16

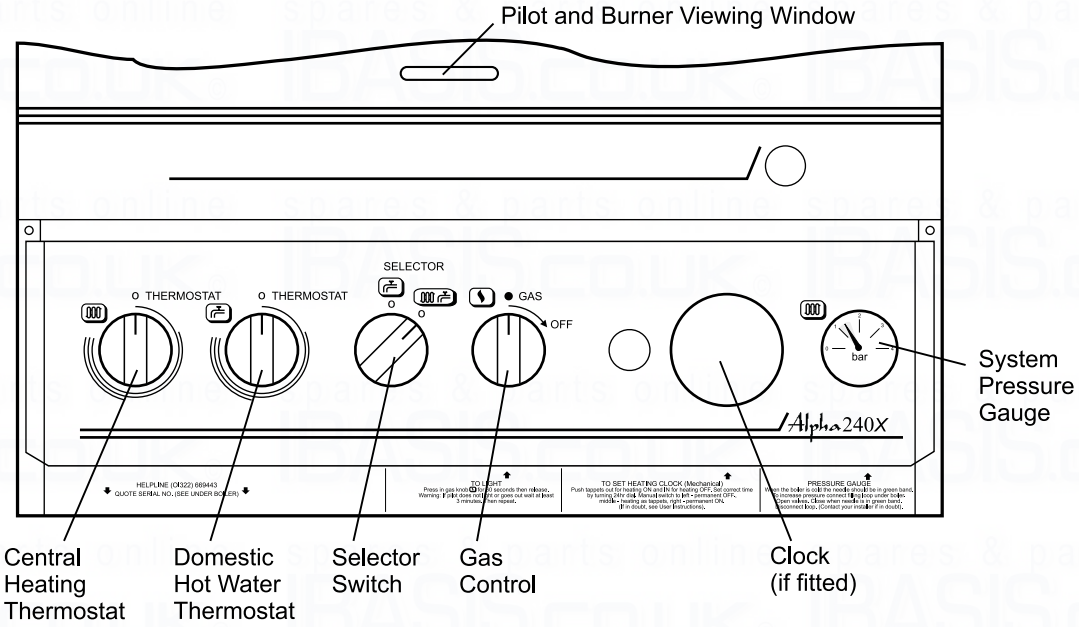

Fig. 16

5.3 TEST FOR GAS SOUNDNESS AND PURGE THE SUPPLY

1. With the boiler gas service cock closed (spindle flats at right angles to valve). Pressure test the gas supply and inlet pipework connection to the boiler gas service cock for soundness in accordance with BS 6891.
2. Loosen the gas inlet pressure test point screw on the gas valve (see Fig. 17). Ensure the gas supply is on and open the boiler service cock to purge in accordance with BS 6891.
3. Retighten the test point screw and test for gas soundness. Close the boiler gas service cock.

5.4 INITIAL LIGHTING - Refer to Fig. 16

Note: Remove the protective plastic coating from the boiler painted panels before lighting.

1. Ensure that the gas and electrical supplies to the boiler are off and that the mains water inlet valve and the central heating flow and return valves are open.
2. Turn on the gas and electrical supplies to the boiler.
3. Ensure all external controls are calling for heat. If the optional Clock is fitted, refer to the User's instructions, set the time and ensure the Clock is in an 'on' mode.
4. Set the hot water and central heating temperature selectors to maximum.

5. Set the selector switch to (DHW only).

   Light the pilot.
   Depress the gas valve control, allowing gas to the pilot. The micro switch on the gas valve is switched on when the control is depressed. The fan will operate at full speed. When the air pressure switch is proved, after a delay of about 10 seconds, a spark will light the pilot.

   Warning: If the pilot does not stay alight, release the gas control and turn it clockwise (about ¼ turn). Wait 3 minutes and repeat lighting procedure.

   When the pilot remains alight, continue to hold the gas control in for a further 20 seconds, then release it: the pilot should remain alight and can be viewed through the window in the room sealed chamber panel.
   When the gas control is released, the fan goes to slow speed.
6. Open a hot water tap, the main burner will light and the boiler will provide hot water. Close the tap and the burner will go out.
7. Set the selector switch to (CH and DHW). The boiler will now run in the central heating mode. The pump will start, the fan will start; once the pressure switch is proved, the main gas valve solenoid will open allowing the main burner to light from the pilot.

5.5 CHECK THE BURNER PRESSURES - Fig. 17

Turn the boiler off. Loosen the burner pressure test point screw on the gas valve and connect a pressure gauge. Allow the boiler to run for 10 minutes and check the burner pressures.

Hot water mode

1. Set the selector switch to (DHW only) and fully open a hot water tap.
2. The burner will light at the ignition rate and the burner pressure will increase to maximum.
3. Gradually close the hot tap and check that the burner pressure decreases to its minimum. Fully open the tap and check that the burner pressure increases. Close the tap and check that the burner goes off.
   The burner pressure settings have been factory set and do not require adjusting. If incorrect, check that the inlet gas pressure is 20 mbar. If the inlet gas pressure is not 20 mbar, either the pipework is too small or the gas supply to the house is insufficient, in which case contact your gas supplier.

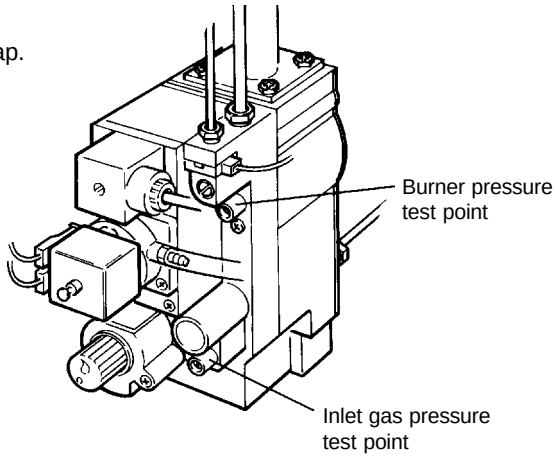

Fig. 17

Central heating mode

1. Set the selector switch to (DHW and CH).
2. The burner will light at the ignition rate and will increase to the factory pre-set maximum output.
3. Turn off the boiler. Disconnect the pressure gauge and tighten the test point screw.

Test for gas soundness using suitable leak detection fluid.

Note: Refer to Technical Data, section 2.1 for burner pressure settings.

5.6 FINAL COMMISSIONING

1. Allow the heating system to heat up, then balance the system to achieve the necessary temperature difference across the heating flow and return pipes at the boiler and check the system volume and pressure. (Refer to Technical Data, sections 2.8 and 2.10).
2. Turn off the boiler.
3. Thoroughly flush out the water pipework and clean the filters in the heating return and mains water inlet isolating valves.
4. Re-pressurise the system as described in section 5.1.

5.7 FINAL ASSEMBLY

1. Raise the control panel and secure in position with the screws previously removed.
   Note: Ensure the gas control locates correctly over the black cap on the gas valve knob.
2. Place the front casing in position over the boiler ensuring the bottom is located behind the control panel and secure in position at the top using the screws previously removed.
3. If the boiler is to be left in service with the User, set the controls, clock (if fitted, see User's Operating manual) and room thermostat (if fitted) to the User's requirements.
4. If the boiler is not to be handed over immediately, close the boiler gas service cock and switch off the electrical supply.
5. If there is any possibility of the boiler being left during frost conditions, then the boiler and system should be drained. (Refer to Component Replacement, section 8.2).
   It is recommended that a label is attached to the boiler drawing attention to the fact that the system has been drained.
6. Complete the details of the installation on the back page of this manual.

5.8 USER INFORMATION

The User must be advised (and demonstrated if necessary) of the following important points:-

1. How to light and turn off the boiler and how to operate the system controls.
2. The importance of annual servicing of the boiler to ensure safe and efficient operation.
3. That any servicing or replacement of parts must only be carried out by CORGI registered personnel.
4. Ensure that the boiler controls and room thermostat (if fitted) are set to the User's requirements.
5. Tell the User about the sealed system pressure.
6. Show the User the position of the pressure relief valve discharge pipe.
7. Hand the User's instructions and the Benchmark Log Book to the User.
8. Leave these Installation and Servicing instructions with the User for use on future calls.

6 BOILER OPERATION

The boiler operating mode is controlled by the selector switch on the facia panel. When set to , the boiler will only operate in the Domestic Hot Water mode. When set to , it will operate in the Domestic Hot Water and Central Heating mode.
Note: The clock (if fitted) only controls the operating times of the central heating, not domestic hot water - DHW is available continuously.

Domestic hot water supply always takes priority over central heating. If a demand for hot water is required during a central heating period, the boiler will automatically switch to the hot water mode until the demand is satisfied. This interruption in the central heating is only when the demand for hot water is present and should not be noticed by the User.

6.1 CENTRAL HEATING MODE

If there is a call for heat, the pump will start to circulate the central heating water, operating the flow switch. The fan will run at full speed; once the air pressure switch is proved the burner will light. The burner output then automatically adjusts to suit the system demand; as the temperature of the water in the boiler approaches that set by the adjustable temperature selector, the burner output is reduced. When the set temperature is reached, the burner is turned off and fan drops to low speed. The burner will not relight for 3 minutes. If the CH sensor has not registered the pre-set temperature but the room thermostat is satisfied the burner is turned off, the fan drops to low speed. In this instance there is no 3 minute delay before the burner will relight.

If there is a demand for DHW during the 3 minute burner delay, the boiler will operate to provide DHW until the tap is closed; the boiler will then immediately revert to provide CH if there is a demand.

6.2 DOMESTIC HOT WATER MODE

When a demand for hot water (by opening a hot tap, etc.) is sensed by the flow switch, the pump starts and the burner lights at its middle output, increasing to its maximum output. Water in the boiler is then diverted from the central heating system to the domestic hot water heat exchanger, heating the incoming mains water. The burner output is varied to maintain the temperature of the hot water as that set by the adjustable temperature selector. When the flow switch senses that hot water is no longer required the burner is turned off and the boiler immediately returns to the central heating mode.

In both modes the fan operates at full speed before the burner lights, remaining at that speed until the demand is satisfied.

7 ROUTINE SERVICING

To ensure efficient operation of the boiler it is recommended that it is checked and serviced as necessary at regular intervals. The frequency of servicing will depend upon the particular installation conditions and usage, but in general once per year should be adequate.

It is the law that any service work must be carried out by a competent person, i.e. CORGI registered personnel.

7.1 IMPORTANT NOTES PRIOR TO SERVICING

1. Check the flue terminal outside and ensure it is not blocked.
2. Run the boiler and check the operation of its controls.
3. Refer to Fig. 2 or 3 for location of flue sampling point.
4. Ensure that all system connections and fittings are sound. Remake any joints and check the tightness of any fittings that may be leaking.
5. It is recommended that the operation of the safety valve is checked by turning the head anti-clockwise until it clicks. The click is the safety valve lifting off its seat allowing water to escape from the system - check that this is actually happening.
6. Refill, vent and re-pressurise the system as necessary. (Refer to Commissioning, section 5.1).
   If the system pressure exceeds 2.5 bar when operating at maximum temperature, the heating expansion vessel should be checked and re-pressurised, if necessary.
   Note: 1. Check the expansion vessel charge only when the system pressure is zero.
   2. The expansion vessel pressure test point is accessible from the top and rear of the boiler.
7. Record details of the service in the Service History section on page 37 of this manual.

Warning: Before servicing the boiler, isolate the electrical supply and close the boiler gas service cock. Allow the boiler to cool.

The data label is positioned on the right hand case side panel and is visible after removing the front casing.

Always test for gas soundness after servicing any gas carrying components.

7.2 PREPARE FOR SERVICING - Fig. 18

1. Ensure the electrical supply is isolated and the gas supply is off.
2. Remove the two screws securing the top of the front casing. Lift the cover up slightly and remove.
3. Remove the four screws securing the room sealed chamber panel and remove the panel, taking care not to damage the seal.
4. Remove the two fixing screws (one each side) securing the control panel. Close the front cover, raise the complete control panel slightly, hinging it forward at the same time.
5. Disconnect the thermocouple and pilot supply from the gas valve. Remove the two screws securing the pilot assembly to the burner. Remove the pilot shield and withdraw the complete pilot assembly.
6. Remove the five screws securing the combustion chamber front cover and remove the cover.
7. Withdraw the main burner out of the boiler. Take care not to damage the side insulation panels.

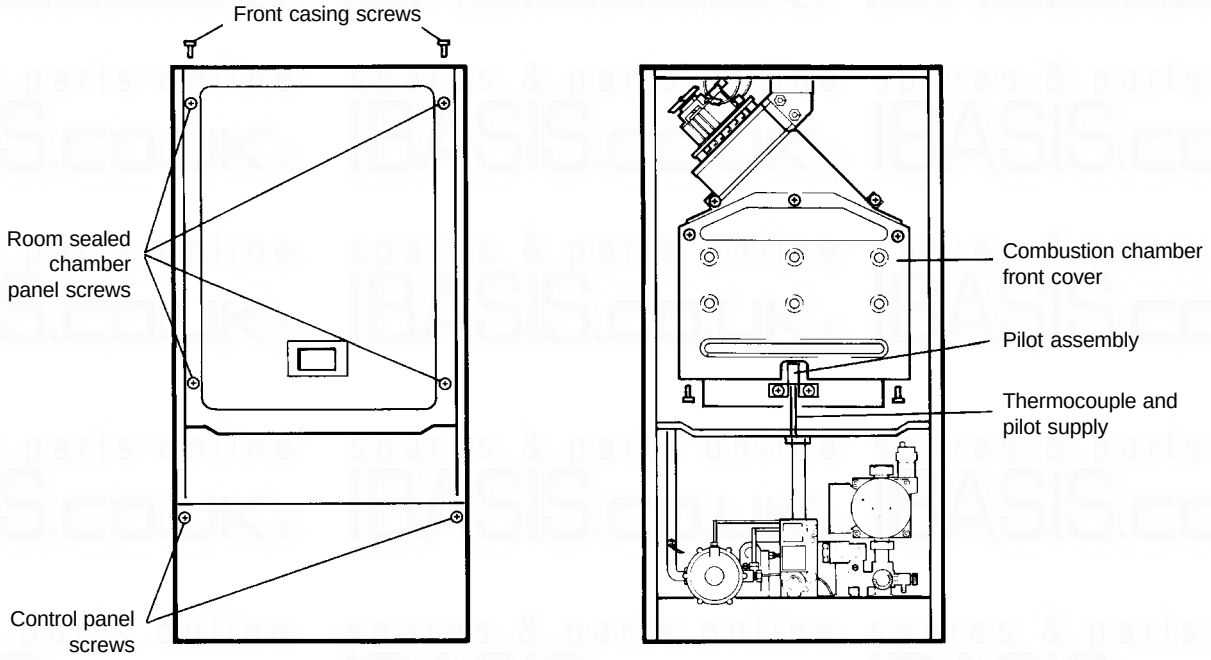

Fig. 18

7.3 CLEANING THE BOILER

1. Remove any deposits from heat exchanger using a suitable soft brush. Do not use a brush with metallic bristles.
2. Check the condition of the combustion chamber insulation panels. Any damaged panels must be replaced. (Refer to Component Replacement, section 8.22).
3. Check the condition of the burner injectors on the manifold, carefully clean them with a soft brush if necessary. Do not use a brush with metallic bristles as this might damage the injectors.
4. Remove any fallen deposits from the bottom of the inner case.
5. Unscrew and replace any injector that appears damaged.
6. Clean the top of the burner with a soft brush and check that the flame ports are clear. Blockages may be removed with a stiffer brush. Tap the burner, open end down, to remove any deposits from inside.
7. Check the condition of the pilot assembly, removing any carbon deposits from the thermocouple tip. Disconnect the pilot supply from the pilot burner, carefully withdraw it and remove the injector. Check the condition of the pilot injector and clean if necessary. Refit the pilot injector over the pilot supply and reconnect it to the pilot burner (see Fig. 18).
9. Check the spark gap, positioning and height of the electrodes (see Fig. 19).
10. Check that the fan impeller is clean and free to rotate.

7.4 RE-ASSEMBLE THE BOILER

1. Replace the burner, ensuring it is located correctly over the injectors and the four locating pins (two each side).
2. Replace the combustion chamber front cover, ensuring the bottom is correctly located in the burner.
3. Refit the pilot assembly and pilot shield to the burner. Ensure the ignition lead is still connected and the seal is in position in the bottom of the inner case. Reconnect the pilot supply and thermocouple
4. Test the connections for gas soundness and check the burner pressures. (Refer to Commissioning, sections 5.4 and 5.5).
5. Ensure that the room sealed chamber panel seal is intact and in position, replace the panel and secure it in position with the screws previously removed.
6. Raise the control panel and secure in position with the screws previously removed.
7. Place the front casing in position over the boiler ensuring the bottom tags are located behind the control panel and secure in position at the top using the screws previously removed.
8. Check the operation of the boiler. (Refer to Boiler Operation, section 6).
9. Return all controls to their original settings.

8 COMPONENT REPLACEMENT

It is the law that any service work must be carried out by a competent person, i.e. CORGI registered personnel.

Warning: Before replacing any boiler components, isolate the electrical supply and close the boiler gas service cock. Allow the boiler to cool.

Always test for gas soundness after replacing any gas carrying components or disturbing any gas connections.

Check the operation of the boiler. (Refer to Boiler Operation, section 6).

Ensure that all the controls are returned to their original settings.

The replacement of components in sections 8.3 to 8.20 does not require draining of the boiler.

8.1 GENERAL ACCESS - Fig. 17

Ensure the electrical supply is isolated and the gas supply is off.

Remove the two screws securing the top of the front casing. Lift the cover up slightly and remove.

1. **If access is required behind the control panel -** Remove the two fixing screws (one each side) securing the control panel. Raise the complete control panel slightly, hinging it forward at the same time.
   When replacing the control panel, ensure that the gas control locates correctly over the black cap on the gas valve knob.
2. **To gain access to the combustion chamber -** Remove the four screws securing the room sealed chamber panel and remove the panel, taking care not to damage the seal. When replacing the panel, ensure the seal is intact and in position.
3. **To gain access to the control panel components -** Remove the five screws securing the rear cover and carefully raise the cover from the front. When replacing the cover, ensure no wires are trapped and all wiring grommets are in position. Secure with five screws - do not overtighten.

8.2 DRAINING THE BOILER - Refer to Figs. 2, 11

Isolate the electricity supply and close the boiler gas service cock (see Fig. 11). Allow the boiler to cool.

Remove the two screws securing the top of the front casing. Lift the cover up slightly and remove.

Remove the two fixing screws (one each side) securing the control panel. Raise the complete control panel slightly, hinging it forward at the same time.

1. **Heating circuit**
   Close the central heating flow and return valves (see Fig. 11).
   Connect a suitable pipe to the drain point (see Fig. 2) and route it to a suitable container. Open the drain tap.
2. **Hot water circuit**
   Close the mains water inlet valve (see Fig. 11).
   Open any hot tap below the level of the boiler to allow as much draining as possible.

Note: Some water will remain in the components and care must be taken when removing them.

8.3 PILOT COMPONENTS - Fig. 19

Gain access as in section 8.1.

Disconnect the thermocouple and pilot supply from the gas valve. Remove the pilot assembly from the burner.

1. **Thermocouple**
   Disconnect from the pilot burner and withdraw through the grommet. Carefully bend new thermocouple to match the old one, pass it through the seal and connect to the pilot burner.
2. **Electrode**
   Disconnect the lead from the electrode, unscrew the nut and withdraw the electrode. It will be necessary to remove the thermocouple first. Fit the new electrode and check the spark gap (see Fig. 19).
3. **Pilot injector**
   Disconnect the pilot supply and remove the injector. Fit the new injector over the pilot supply as shown in Fig. 19, and reconnect it to the pilot burner.

Re-assemble

1. Replace the pilot assembly and pilot shield then reconnect the pilot supply and thermocouple to the gas valve. Ensure that the overheat thermostat connection is in position in the gas valve before securing the thermocouple.
2. Light the boiler and test the pilot supply for gas soundness. (Refer to Commissioning, section 5.4).
3. Complete re-assembly as described in Routine Servicing, section 7.4 paragraphs 5 to 9.

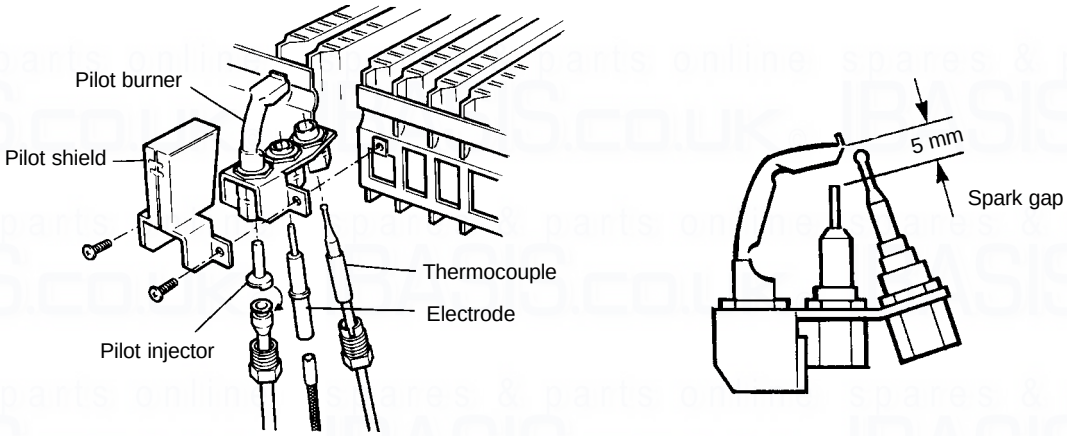

Fig. 19

8.4 IGNITION LEAD - Refer to Fig. 25

1. Gain access as in section 8.1.
2. Disconnect the lead from the electrode.
3. Disconnect the lead from the ignition PCB, noting its position (see Fig. 25).
4. Fit the new lead ensuring it passes through the grommets in the control panel cover and base of the combustion chamber.
5. Re-assemble in reverse order.

8.5 MAIN BURNER

1. Remove the burner as described in Routine Servicing, section 7.2.
2. Re-assemble with a new burner as described in Routine Servicing, section 7.4.

8.6 BURNER INJECTORS

1. Remove the burner as described in Routine Servicing, section 7.2.
2. Unscrew the damaged injector and screw in a replacement.
3. Re-assemble as described in Routine Servicing, section 7.4.

8.7 FAN - Fig. 20

1. Gain access as in section 8.1.
2. Remove the five screws securing the combustion chamber front cover and remove the cover.
3. Disconnect the air pressure tubes from the fan outlet.
4. Loosen the fan to flue adaptor clamp screws and raise the clamp as far as possible.
5. Remove the two screws securing the flue hood to the back panel and withdraw the assembly sufficiently to disconnect the fan wiring.
6. Remove the four screws securing the fan to the flue hood. Transfer the fan outlet casing to the new fan and re-assemble in reverse order.
   Connect the fan wiring, blue to terminal 'MIN', brown to terminal 'MAX' and black to terminal 'COM'.
   Ensure the pressure tubes are connected correctly (see Fig. 20). (**−** and **+** marked on the fan outlet), and that the bottom of the combustion chamber cover is located in the burner.
7. Re-assemble and test the boiler as described in Routine Servicing, section 7.4 paragraphs 5 to 9.

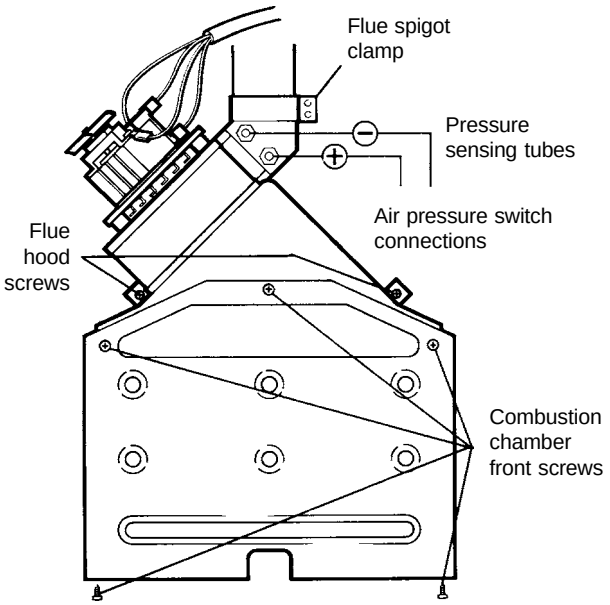

Fig. 20

8.8 AIR PRESSURE SWITCH - Fig. 21

1. Gain access as in section 8.1, remove the five screws securing the combustion chamber front cover and remove the cover.
2. Disconnect the pressure sensing tubes.
3. Remove the two fixing screws and disconnect the wiring.
4. Connect the wiring to the new switch, black to C, brown to NC, blue to NO and reconnect the pressure tubes (see Fig. 21).
5. Secure the new switch in position.
6. Re-assemble in reverse order.

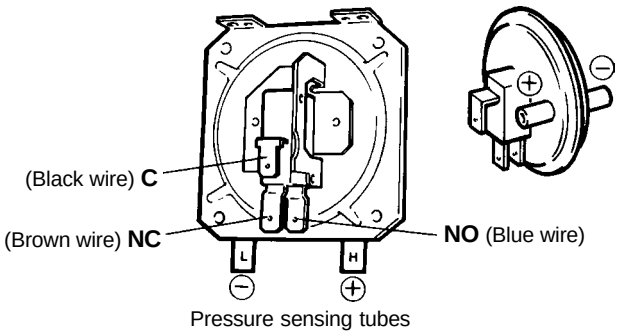

Fig. 21

8.9 OVERHEAT THERMOSTAT - Fig. 22

1. Gain access as in section 8.1.
2. Disconnect the thermocouple from the gas valve and withdraw the overheat thermostat lead. Unscrew the other overheat thermostat lead from the back of the gas valve - accessible from the boiler base.
3. Remove the two fixing screws and remove the overheat thermostat from the CH flow pipe.
4. Fit the new overheat thermostat and re-assemble in reverse order.

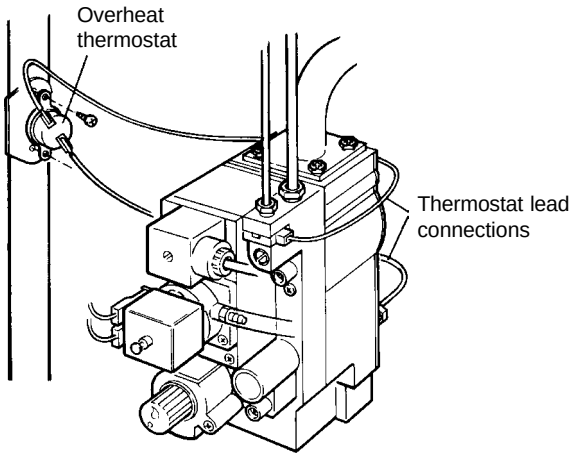

Fig. 22

8.10 GAS VALVE - Fig. 23

1. Gain access as in section 8.1.
2. Disconnect the thermocouple, pilot supply and overheat thermostat leads from the gas valve.
3. Disconnect the wiring and pressure tube from the gas valve.
4. Remove the screw securing the light grey cover around the gas control knob.
5. Remove the screw securing the microswitch assembly to the valve (access from beneath the boiler).
6. Remove the four manifold screws from beneath the boiler.
7. Disconnect the burner manifold union underneath the room sealed chamber.
8. Carefully push the manifold towards the rear of the boiler (take care not to damage the manifold sealing washer) and lift out the valve assembly.
9. Remove the burner manifold and fit it to the new valve using the new 'O' ring seal supplied.
10. Fit the new assembly, using the new 'O' ring supplied in the bottom of the gas valve.

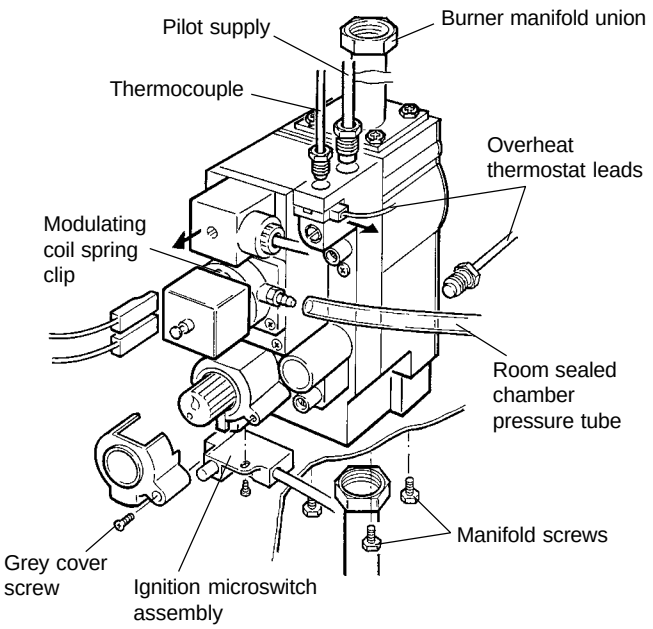

Fig. 23

11. Remove light grey cover from the new valve and fit the microswitch assembly. Replace the cover (ensure the operating arm is located under the cover).
12. Re-assemble in reverse order.
13. Light the boiler and test for gas soundness. (Refer to Commissioning, section 5.4).
14. Complete re-assembly as described in Routine Servicing, section 7.4 paragraphs 5 to 9.

8.11 GAS VALVE MODULATING COIL - Refer to Fig. 23

1. Gain access as in section 8.1.
2. Disconnect the wires from the coil and remove the spring clip.
3. Lift off the coil and re-assemble in reverse order with a new coil. The polarity of the wires is not important.

8.12 IGNITION MICROSWITCH ASSEMBLY - Fig. 24

1. Gain access as in section 8.1.
2. Remove the screw securing the light grey cover around the gas control knob.
3. Remove the screw securing the microswitch assembly to the valve (access from beneath the boiler).
4. Remove the 2-pin connector from the ignition PCB and remove the microswitch complete with cable.
5. Re-assemble in reverse order.

8.13 VIEWING WINDOW

1. Gain access as in section 8.1.
2. Remove the two screws securing the window frame and remove the damaged glass and gasket.
3. Re-assemble in reverse order with a new glass and gasket. Ensure the gasket is next to the inner case front panel.

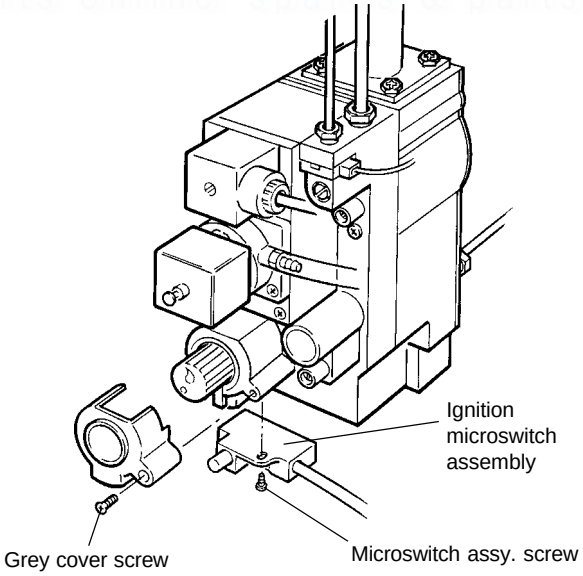

Fig. 24

8.14 INTERNAL FUSE - Refer to Fig. 14

The fuse is located in the boiler terminal block.

1. Gain access as described in Installation, section 4.8.
2. Lift out the fuse holder and remove the fuse. Fit a fast blow 2 A fuse as a replacement, ensuring that the holder snaps into position.
3. Re-assemble in reverse order, ensuring the terminal block is located correctly on the plastic pin.

8.15 IGNITION PCB - Refer to Fig. 25

1. Gain access as described in section 8.1.
2. Remove the four fixing screws and disconnect the wiring.
3. Refer to Fig. 25, connect the wiring to the new PCB and re-assemble in reverse order.

8.16 SELECTOR SWITCH - Refer to Fig. 26

1. Gain access as described in section 8.1.
2. Remove the selector knob and remove the two screws securing the switch.
3. Disconnect the wiring connectors from the switch.
4. Re-assemble in reverse order using a new switch. Ensure the wiring is connected as follows:-
   Black and Brown to terminal '1', Red to terminal 'A'.

8.17 MAIN PCB - Fig. 26

1. Gain access as described in section 8.1.
2. Disconnect all the wiring connectors from the PCB.
3. Remove the four fixing screws and carefully withdraw the board from the switch spindles.
4. Re-assemble in reverse order. Refer to the Wiring Diagram on page 29 or 30 for connections.

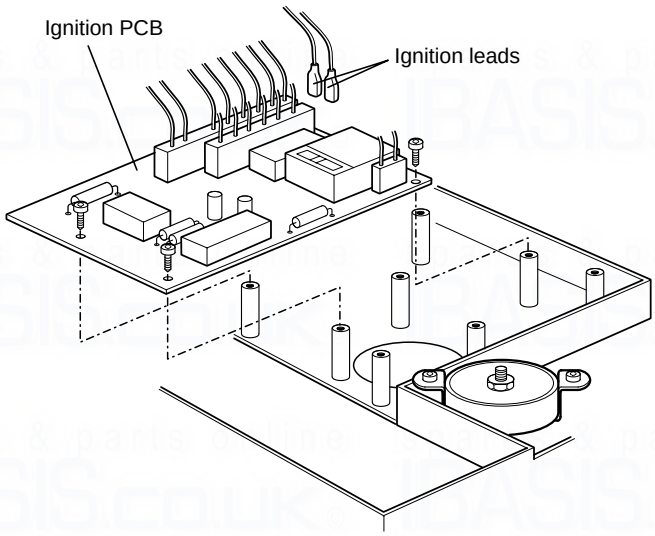

Fig. 25

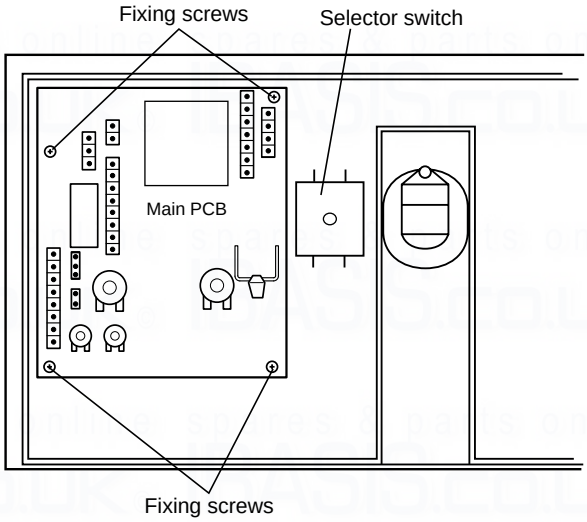

Fig. 26

8.18 SUPPRESSOR - Fig. 27

1. Gain access as described in section 8.1.
2. Withdraw the suppressor from the control panel cover.
3. Disconnect the wiring and re-assemble with a new suppressor. Connect the wiring as follows:-
   Mains Brown to L2, Mains Blue to N4, Brown to U1,
   Blue to 3U, Green/Yellow to ⏚.

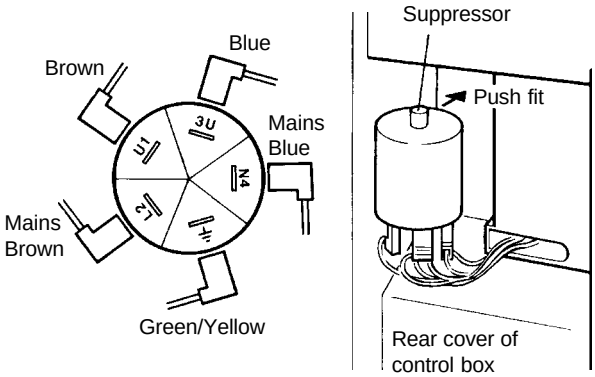

Fig. 27

8.19 CLOCK (if fitted) - Refer to Fig. 15

1. Gain access as described in section 8.1.
2. Remove the ignition PCB as described in section 8.16.
3. Disconnect the wiring from the clock.
4. Remove the clock retaining screws and withdraw the clock from the control panel.
5. Fit the new clock, and connect the wires as follows:-
   Blue to terminal 1, Brown to terminal 2 and Black wires to terminals 3 and 4, (or as per the instructions supplied with the clock).
6. Re-assemble in reverse order. Refer to the User's instructions and the boiler's control cover to set the clock.

8.20 DHW AND PRIMARY FLOW SWITCHES - Fig. 28

1. Gain access as described in section 8.1.
2. Remove the screw securing the switch bracket to the diverter valve, disconnect the wiring and remove. Re-assemble in reverse order with a new switch. Ensure that the bracket is located under the nut flange.
3. Connect the wiring as follows:-
   PRIMARY flow switch (back of diverter valve), red wires to terminals as shown in Fig. 28.
   DHW flow switch (front of diverter valve), Connect the plug to the switch shown in Fig. 28.

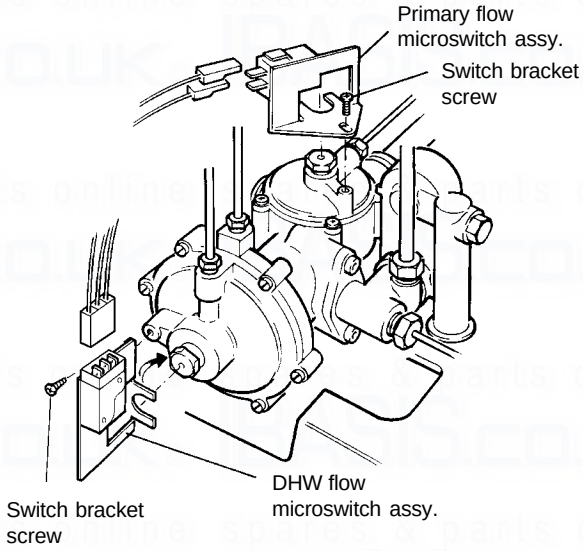

Fig. 28

8.21 HEAT EXCHANGER

1. Drain the boiler heating circuit as described in section 8.2.
2. Remove the fan and flue hood assembly as described in section 8.7.
3. Carefully prise off the two clips from the heat exchanger to flow/return pipes.
4. Lift up the heat exchanger off the pipes.
5. Fit a new heat exchanger, ensuring the 'O' rings are in position in the flanges. Lubricating the 'O' rings with a soap solution with aid assembly. Ensure the base of the heat exchanger is correctly located over the combustion chamber sides.
6. Replace the clips - narrow side to the bottom, ensuring the tops are correctly engaged in the slots.
7. Re-assemble in reverse order.
   Connect the fan wiring, blue to terminal 'MIN', brown to terminal 'MAX' and black to terminal 'COM'.
   Ensure the pressure tubes are connected correctly - refer to Fig. 20, and that the bottom of the combustion chamber cover is located in the burner.
8. Refill and pressurise the system. (Refer to Commissioning, section 5.1).

8.22 COMBUSTION CHAMBER INSULATION

1. Gain access as described in section 8.1.
2. Side and front panels slide out.
3. To replace the rear panel remove the heat exchanger as described in section 8.21 and slide out the side insulation panels. Prise out the top of the rear insulation panel and lift it up and out of the boiler.
4. Fit a new panel and re-assemble in reverse order.
   Connect the fan wiring, blue to terminal 'MIN', brown to terminal 'MAX' and black to terminal 'COM'.
   Ensure the pressure tubes are connected correctly - refer to Fig. 20, and that the bottom of the combustion chamber cover is located in the burner.
5. Refill and pressurise the system. (Refer to Commissioning, section 5.1).

8.23 PRESSURE GAUGE - Fig. 29

1. Drain the boiler heating circuit as described in section 8.2.
2. Remove the nut securing the pressure gauge sensor to the R/H side of the diverter valve and withdraw the sensor.
3. Remove two screws securing the gauge to the control panel and withdraw.
4. Fit the new gauge using a new washer on the diverter valve connection if necessary.
5. Refill and pressurise the system. (Refer to Commissioning, section 5.1).

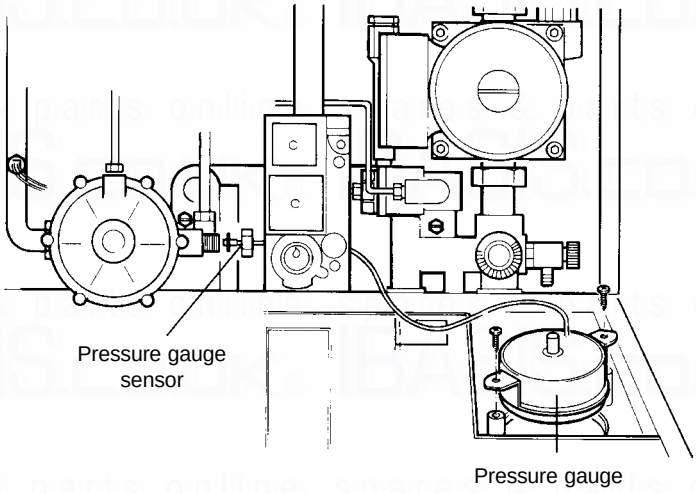

Fig. 29

8.24 PRIMARY TEMPERATURE SENSOR - Fig. 30

1. Gain access as described in section 8.1.
2. Disconnect the wiring and unscrew the sensor. Re-assemble in reverse order with a new sensor (Blue type).

8.25 AUTOMATIC AIR VENT - Fig. 30

1. Drain the boiler heating circuit as described in section 8.2.
2. Unscrew the automatic air vent from the pump outlet. Fit a new one using a new 'O' ring.
3. Refill and pressurise the system. (Refer to Commissioning, section 5.1).

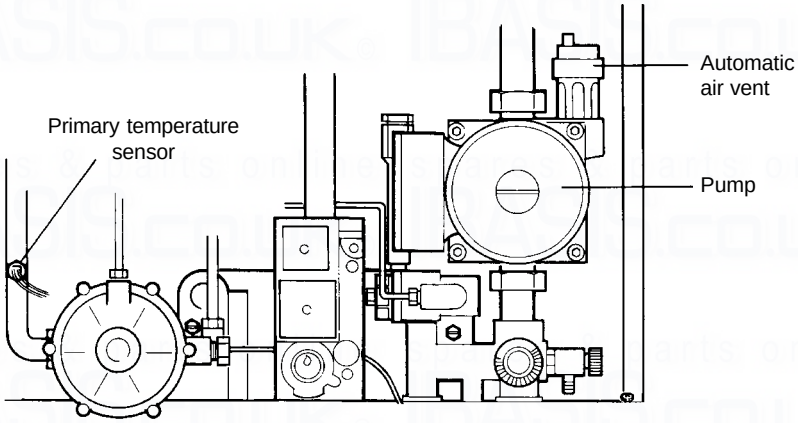

Fig. 30

8.26 PUMP - Refer to Fig. 30

Drain the boiler heating as described in section 8.2.

Pump Head

1. Remove the four socket head screws securing the pump head to the body. Withdraw the head, remove the wiring cover and disconnect the wiring.
2. Connect the wiring to the new head as follows:-
   Brown to L, Blue to N, Green/yellow to ⏚.
   Ensure the pump is set to maximum (3) and re-assemble in reverse order.
3. Refill and pressurise the system. (Refer to Commissioning, section 5.1).

Complete pump

1. Unscrew the automatic air vent from the pump outlet.
2. Disconnect the pump unions and withdraw the pump, remove the wiring cover and disconnect the wiring.
3. Connect the wiring as described above, ensure that pump is set to maximum and re-assemble using new sealing washers.
4. Refill and pressurise the system. (Refer to Commissioning, section 5.1).

8.27 DHW HEAT EXCHANGER - Refer to Fig. 31

1. Drain the boiler heating and hot water circuits as described in section 8.2.
2. Remove two screws securing manifolds to heat exchanger and remove heat exchanger.
   Note: Be careful not to allow water to drip onto any electrical components.
3. Using the new seals supplied in the manifolds, re-assemble in reverse order.
   Note: Ensure the heat exchanger is fitted the right way up - see label on heat exchanger.
4. Refill and pressurise the system. (Refer to Commissioning, section 5.1).

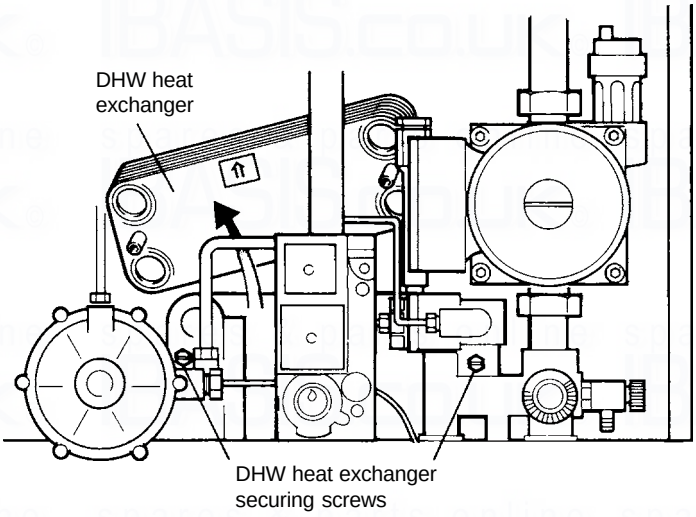

Fig. 31

8.28 PRESSURE RELIEF VALVE OR DHW INLET MANIFOLD - Fig. 32

1. Remove the DHW heat exchanger as described in section 8.37.
2. Disconnect the pump unions and withdraw the pump.
3. Disconnect the pressure relief valve outlet fitting, central heating return and mains water inlet valves.
4. Disconnect the two small flow sensing pipes from the manifold, and the small by-pass pipe from the rear of the diverter valve.
5. Remove the clips (accessible from under the boiler) retaining the by-pass pipe to the manifold and diverter valve and withdraw the pipe.
6. Remove the screw securing the manifold to the chassis (accessible from under the boiler) and remove the manifold.
7. Unscrew the pressure relief valve from the manifold. Fit the replacement valve using a small amount of jointing compound.
   If replacing the manifold, transfer the drain point fitting to the new manifold.
8. Re-assemble in reverse order. Ensure that all seals are in good condition and in position and that the by-pass retaining clips are correctly fitted and locate in the slots.
9. Refill and pressurise the system. (Refer to Commissioning, section 5.1).

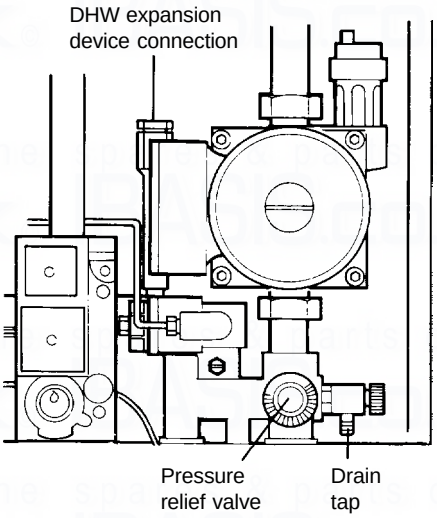

Fig. 32

8.29 DRAIN TAP - Fig. 32

1. Drain the boiler heating circuit as described in section 8.2.
2. Disconnect the pump unions and withdraw the pump.
3. Remove the drain tap fitting from the manifold and fit the replacement. Re-assemble in reverse order.
4. Refill and pressurise the system. (Refer to Commissioning, section 5.1).

8.30 DIFFERENTIAL PRESSURE SENSOR - Refer to Fig. 33

If required, more access may be gained by removing the pump head as described in section 8.26.

1. Drain the boiler hot water circuit as described in section 8.2.
2. Disconnect the two small flow sensing pipes from the R/H manifold.
3. Unscrew and remove the end fitting containing the filter/restrictor.
4. Replace or clean components as necessary and re-assemble in reverse order.
5. Refill and pressurise the system (if necessary). (Refer to Commissioning, section 5.1).

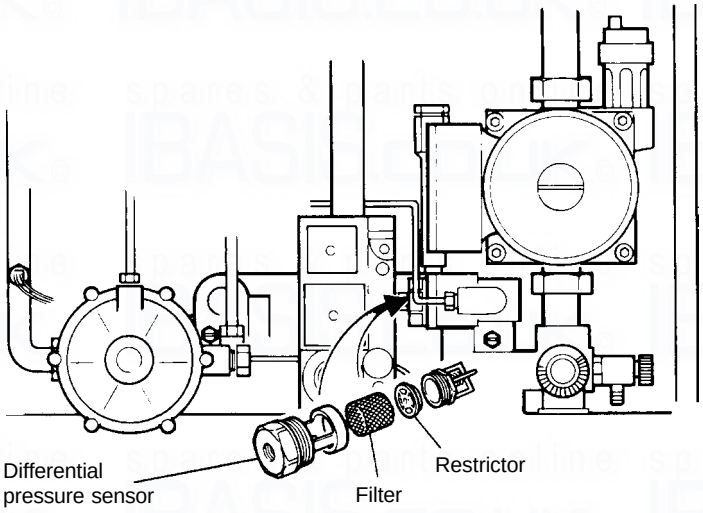

Fig. 33

8.31 MAINS WATER INLET VALVE FILTER - Fig. 34

1. Drain the boiler hot water circuit as described in section 8.2.
2. Unscrew the valve end cap fitting and withdraw the filter.
3. Clean or replace and re-assemble in reverse order.

8.32 HEATING RETURN FILTER - Fig. 34

1. Drain the boiler heating circuit as described in section 8.2.
2. Unscrew the heating return valve end cap fitting and withdraw the filter.
3. Clean or replace and re-assemble in reverse order.

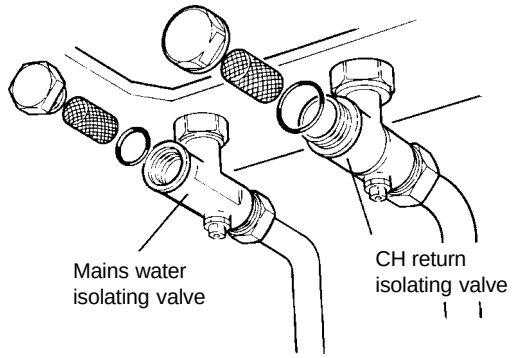

Fig. 34

8.33 DIVERTER VALVE ASSEMBLY - Fig. 35

1. Drain the boiler heating and hot water circuits as described in section 8.2.
2. Remove the two flow switch assemblies from the diverter valve.
3. To avoid damage to the CH temperature sensor on the flow pipe, disconnect its wires (red).
4. Disconnect the following connections from the diverter valve:-
   Two flow sensing pipes, pressure gauge sensor, expansion vessel connection (release the other end to allow the pipe to be moved out of the way), CH flow pipe, small by-pass pipe, CH flow isolating valve.
5. Remove the clips (accessible from under the boiler) retaining the by-pass pipe to the manifold and diverter valve, and withdraw the pipe.
6. Remove the screw securing the diverter valve to the chassis (accessible from under the boiler). Withdraw the valve slightly to disengage it from the manifold, then lift it out of the boiler.
7. Re-assemble in reverse order using the new seals supplied.
8. Refill and pressurise the system. (Refer to Commissioning, section 5.1).

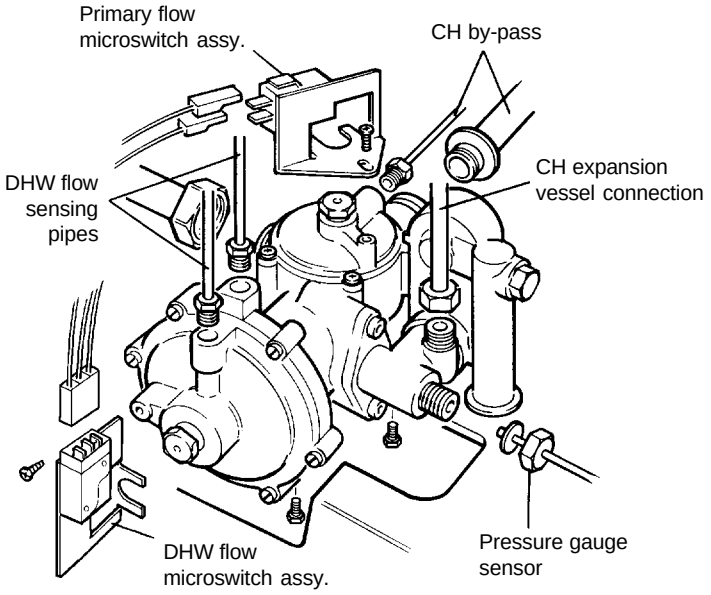

Fig. 35

8.34 DHW FLOW VALVE - Fig. 36

1. Drain the boiler hot water circuit as described in section 8.2.
2. Remove the flow switch assembly from the front of the diverter valve.
3. Disconnect the two flow sensing pipes from the flow valve.
4. Unscrew (not necessary to remove) the two screws securing the DHW flow valve to the diverter valve (one screw accessible from beneath the boiler) and withdraw the valve.
5. When re-assembling, push the new valve into position, holding it in, while tightening the fixing screws.
6. Re-assemble in reverse order.

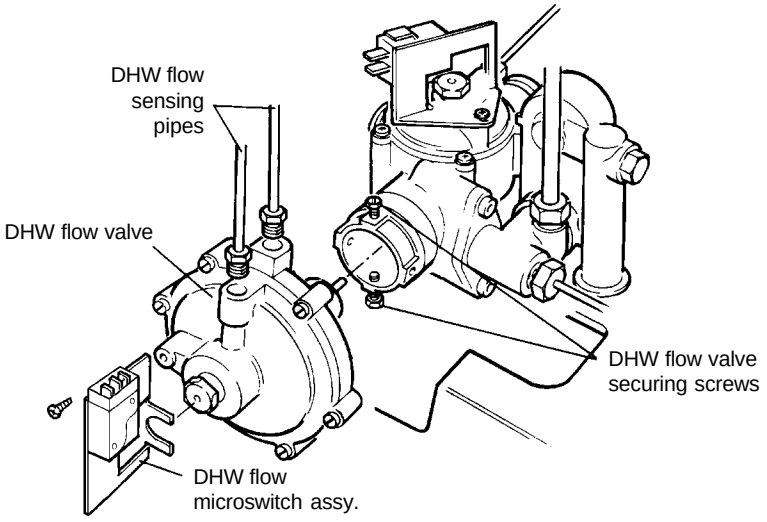

Fig. 36

8.35 PRIMARY FLOW VALVE DIAPHRAGM - Fig. 37

1. Drain the boiler heating circuit as described in section 8.2.
2. Remove the flow switch assembly from the top of the diverter valve.
3. Disconnect the small pipe from the back of the flow valve.
4. Remove the four screws securing the flow valve and carefully remove it from the diverter valve.
5. Replace the diaphragm and re-assemble in reverse order.
6. Refill and pressurise the system. (Refer to Commissioning, section 5.1).

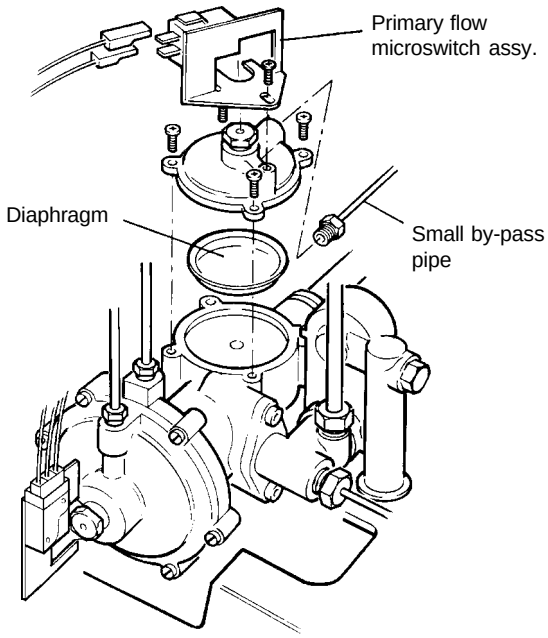

Fig. 37

8.36 EXPANSION VESSEL

1. Drain the boiler heating circuit as described in section 8.2.
2. Disconnect the pipe from the diverter valve and expansion vessel.
3. Remove the nut and washer securing the expansion vessel to the boiler and lift the vessel out of the boiler.
4. When replacing the vessel, ensure that the connection is towards the front of the boiler and re-assemble in reverse order using new seals as necessary.
5. Refill and pressurise the system. (Refer to Commissioning, section 5.1).

Note: If there is less than 350 mm clearance above the boiler or rear exit flue, it is not possible to replace the vessel, in which case an additional vessel should be fitted external to the boiler in the central heating return pipe, as close to the boiler as possible (see Fig. 5).

8.37 DHW EXPANSION DEVICE (if fitted) - Refer to Fig. 32

1. Drain the boiler hot water circuit as described in section 8.2.
2. Unscrew the device from its fitting.
3. Fit the replacement using a new seal.
4. Re-assemble in reverse order.

9 WIRING DIAGRAMS

9.1 ILLUSTRATED WIRING DIAGRAM

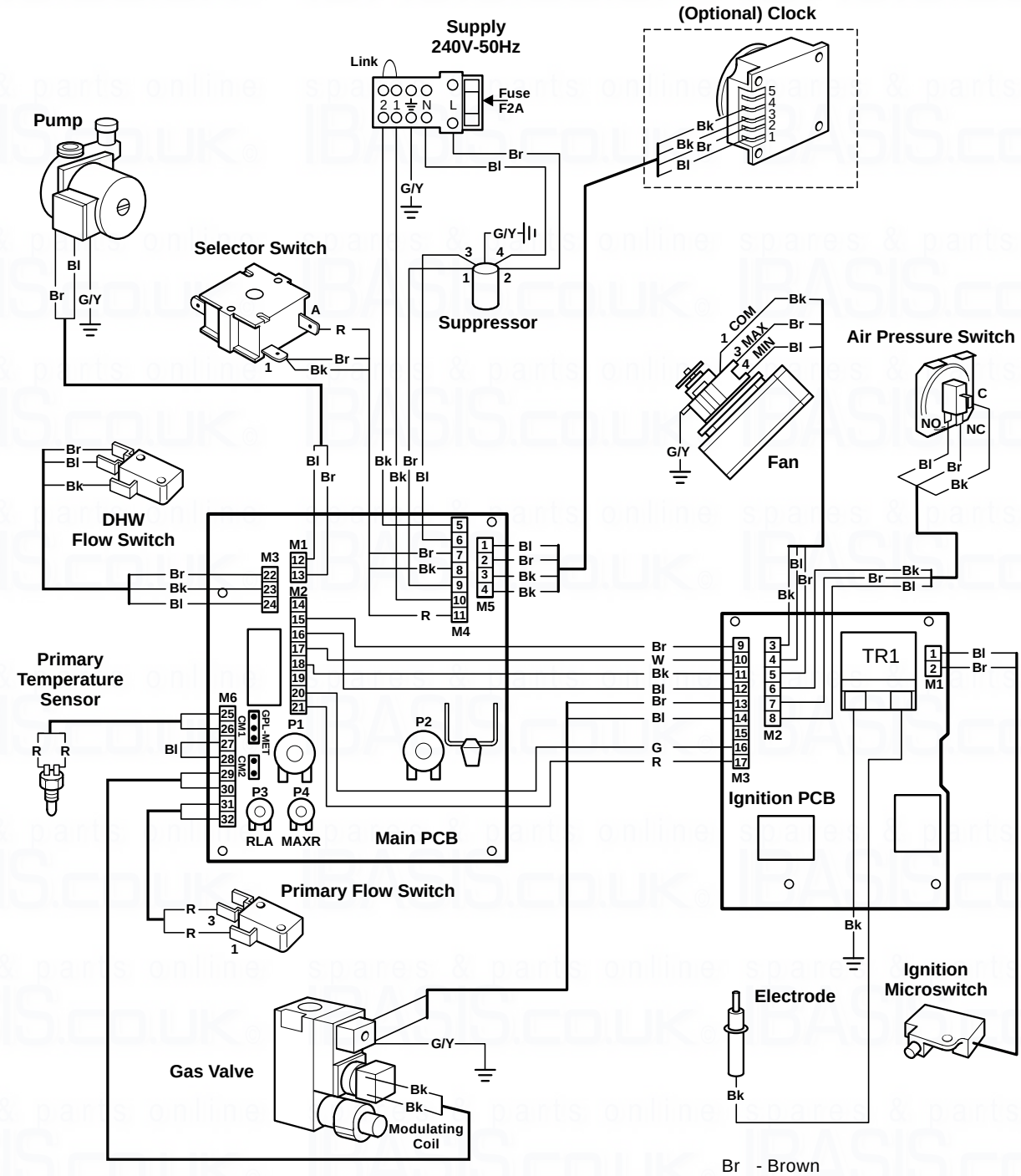

NOTE: REMOVE LINK FROM TERMINALS 1 & 2 TO CONNECT EXTERNAL CONTROL (240V SWITCHING)

Br - Brown
Bk - Black
Bl - Blue
R - Red
Y - Yellow
G - Green
G/Y - Green/Yellow
W - White

9.3 FUNCTIONAL FLOW WIRING DIAGRAM

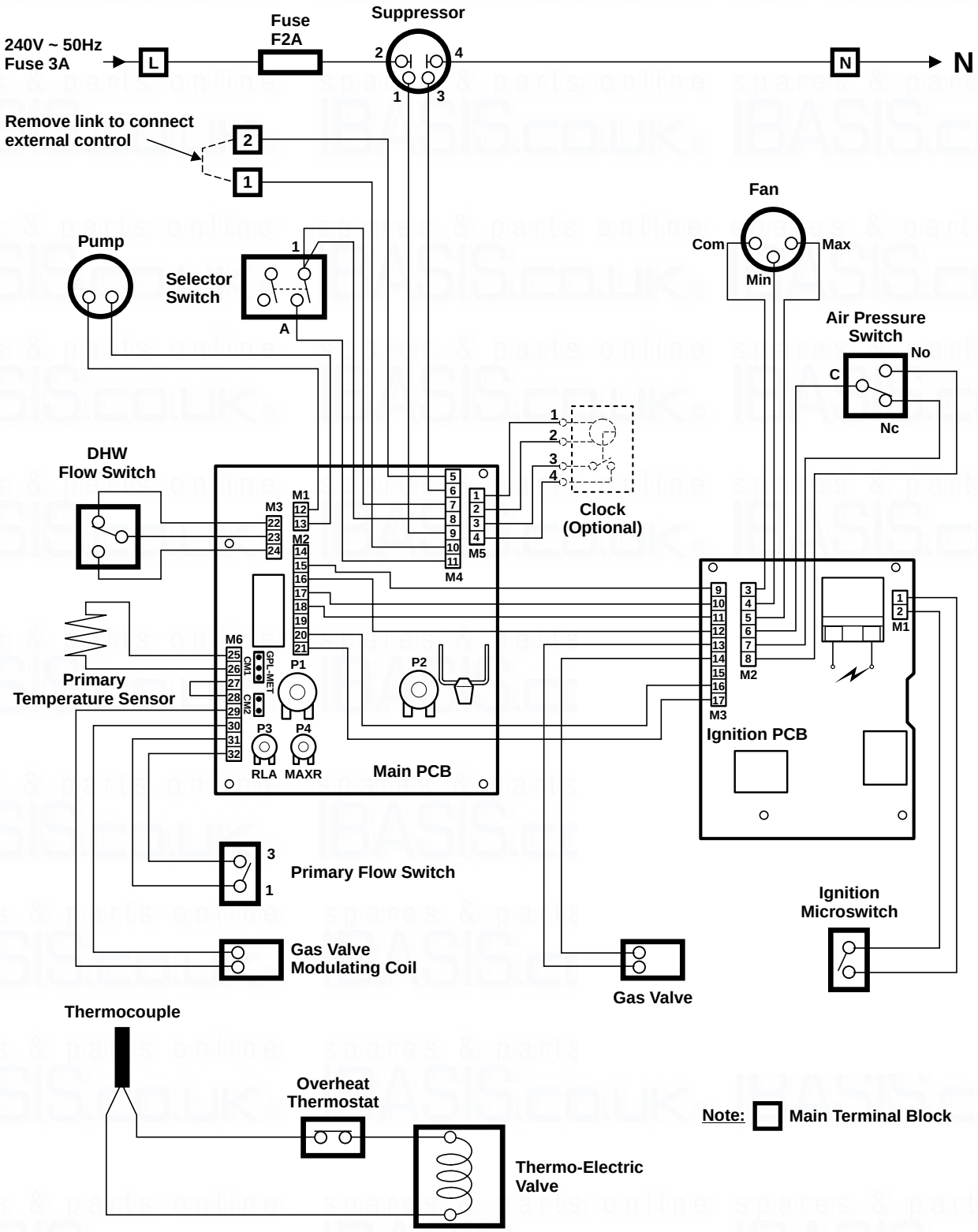

10 FAULT FINDING

10.1 CARRY OUT INITIAL FAULT FINDING CHECKS

1. Check that gas, water and electrical supplies are available at the boiler.
   i.e. Inlet gas pressure = 20 mbar
   Electrical supply = 230/240 V ~ 50 Hz
   CH water system pressurised to between 0.75 and 1.25 bar
   DHW flow rate is more than 2.5 litre/min
2. Carry out electrical system checks, i.e. Earth Continuity, Resistance to Earth, Short Circuit and Polarity with a suitable meter.
   Note: These checks must be repeated after any servicing or fault finding.
3. Ensure all external controls are calling for heat and check all external and internal fuses.

Before any servicing or replacement of parts ensure the gas and electrical supplies are isolated.

10.2 LIGHTING PILOT - Follow operational sequence

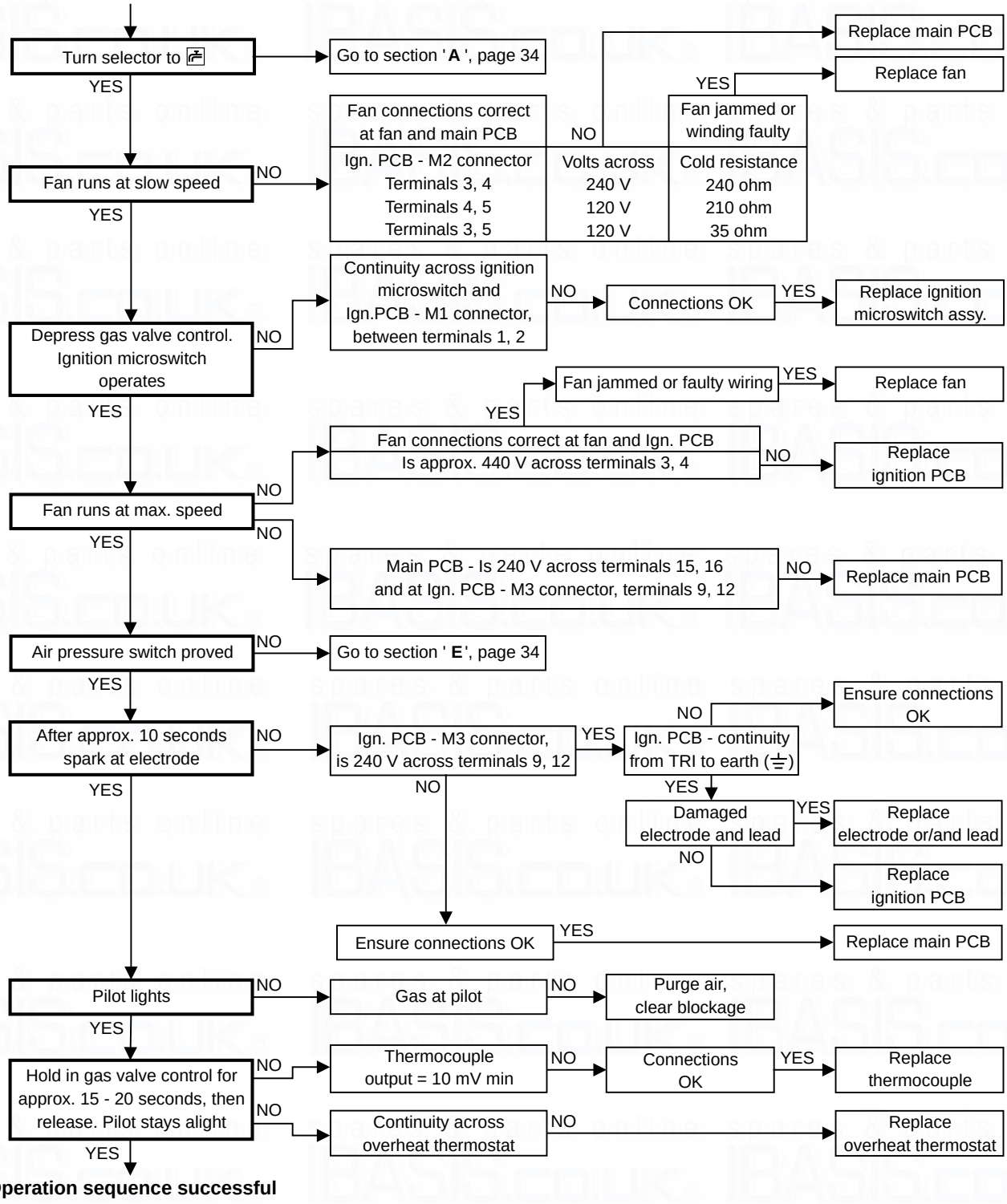

10.3 DOMESTIC HOT WATER - Follow operational sequence

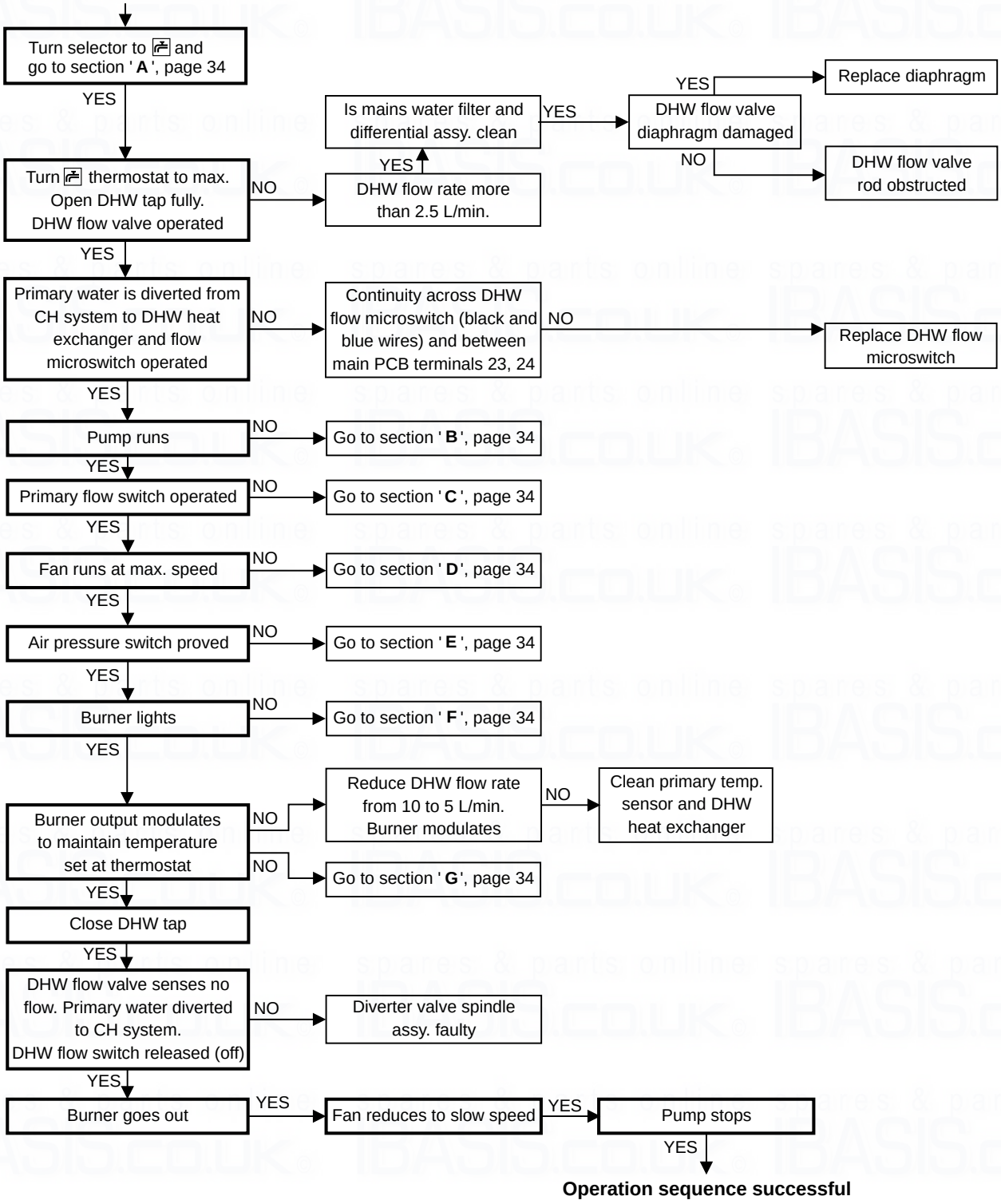

10.4 CENTRAL HEATING - Follow operational sequence

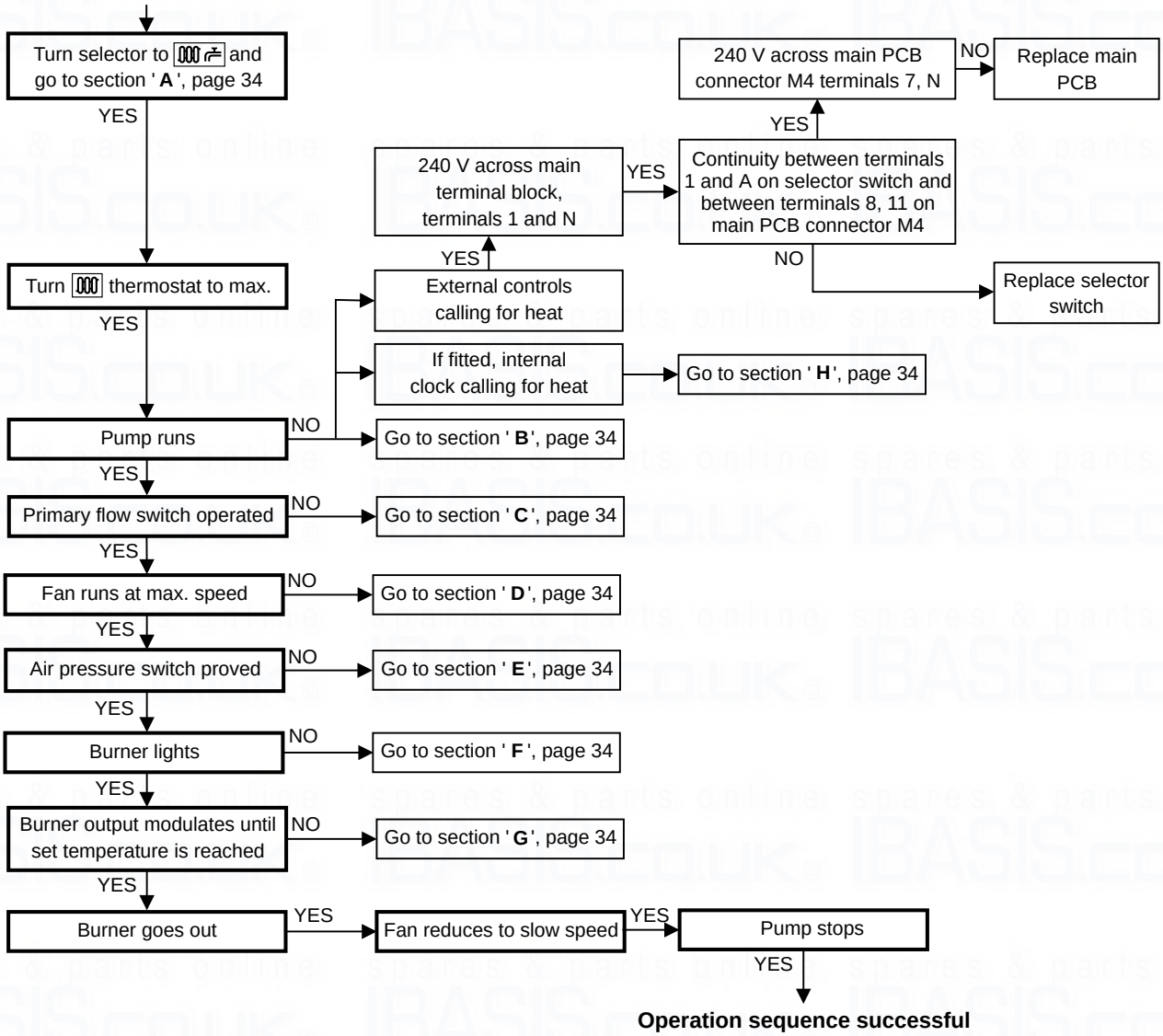

10.5 FAULT FINDING SOLUTION SECTIONS A to L

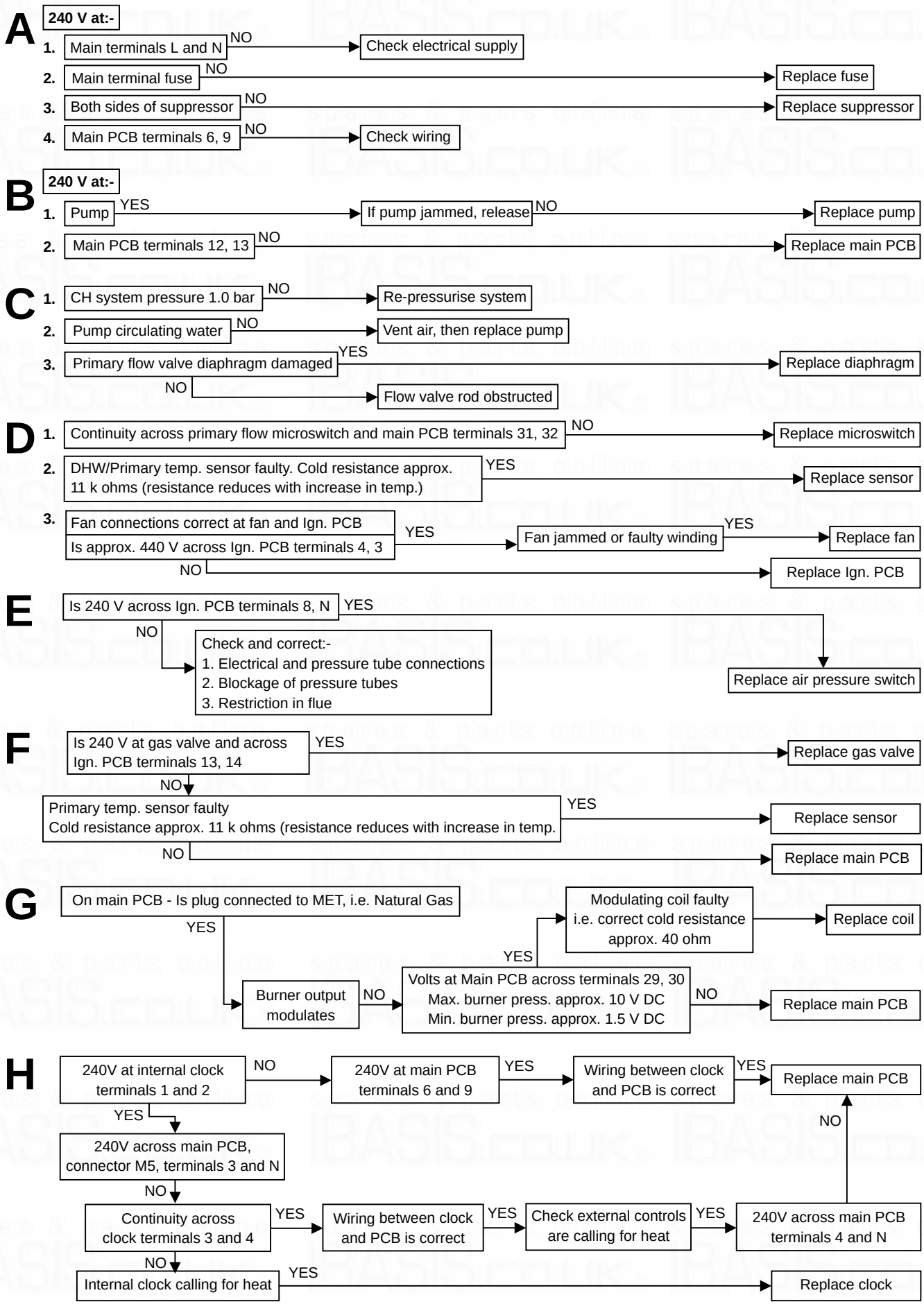

11 SHORT PARTS LIST

Reference	Description	Qty.	Alpha Pt. No.	British Gas GC No.
Fig. 2, item 23	Burner assembly	1	5632490	343 557
Fig. 2, item 22	Main injector 1.18 mm	15	5202820	385 830
Fig. 2, item 26	Primary heat exchanger and seals	1	5632470A	343 558
Fig. 2, item 9	DHW heat exchanger and seals	1	5635540	E00 696
Fig. 2, item 21	Gas valve - Honeywell V4600A1098	1	5630520	343 716
Fig. 23	Gas valve modulating coil	1	8440130	343 560
Fig. 2, item 15	Pump - Grundfos UPS 15/16 AO and seals	1	5628910A	343 562
Fig. 2, item 28	Fan assembly - Fime type L25R7525	1	5640930	E00 695
Fig. 2, item 29	Air pressure switch - Honeywell C6065F1100	1	5629560	393 947
Fig. 37	Primary flow valve and seals	1	5629960A	343 564
Fig. 37	Primary flow valve diaphragm	1	5405320	343 565
Fig. 36	DHW flow valve	1	5629950	343 619
Fig. 36	DHW flow valve diaphragm	1	5405330	343 567
Fig. 28	Primary flow microswitch assembly	1	5625770	343 568
Fig. 28	DHW flow microswitch assembly	1	5643230	E05 232
Fig. 26	Main PCB	1	5643590	E05233
Fig. 30	Temperature sensor	1	8434250	E05234
Fig. 27	Suppressor - Procond 411.10.5060	1	8450200	379 764
Fig. 14	Fuse F2A	1	8421410	343 572
Fig. 22	Overheat thermostat - TOD 36TE21 with leads	1	5626230	343 573
Fig. 2, item 20	Expansion vessel 8 Litre	1	5625560	386 765
Fig. 32	Pressure relief valve 3 bar	1	5619620	397 677
-	Insulation panel set (combustion chamber)	1	5629970	343 577
Fig. 30	Automatic air vent and seals	1	5625830A	343 578
Fig. 29	Pressure gauge	1	8922220	385 839
Fig. 32	Drain tap	1	5625450	343 579
Fig. 19	Pilot injector 0.27 mm	1	5201550	392 935
Fig. 19	Pilot tube	1	5207160	343 574
Fig. 19	Thermocouple	1	5625660	343 575
Fig. 19	Electrode	1	8420930	343 432
Fig. 19	Electrode lead	1	8417441	343 576
Fig. 25	Ignition PCB	1	5645600	E05 235
Fig. 24	Ignition microswitch and cable	1	5645050	E01 725
Fig. 26	Selector switch	1	8630320	E05 236

12 SERVICE HISTORY

DETAILS OF BOILER INSTALLATION

Date of Installation: .....

Name of Installer: .....

Address: .....

.....

.....

.....

Postcode: .....

Telephone No: .....

Boiler Serial Number: .....
(see data label on inside of left hand case panel)

DETAILS OF BOILER SERVICE HISTORY

Date of Service	Details of Service	Service Engineer
.....	.....	.....
	.....	
	.....	
	.....	
.....	.....	.....
	.....	
	.....	
	.....	
.....	.....	.....
	.....	
	.....	
	.....	
.....	.....	.....
	.....	
	.....	
	.....	

Alpha
HEATING INNOVATION

Alpha Therm Limited.
Nepicar House, London Road, Wrotham Heath
Sevenoaks, Kent TN15 7RS

email: info@alphatherm.co.uk
website: www.alpha-innovation.co.uk

These instructions have been carefully prepared but we reserve the right to alter the specification at any time in the interest of product improvement.
© Alpha Therm Limited 1999.

Part No. 920.681.1

Manual compiled and designed by Publications 2000 - Tel: (01670) 356211

11/99/D107