Installation and Servicing Instructions

Alpha 500E

Wall Mounted, Fan Assisted, Room Sealed, Gas Fired Combination Boiler with Unvented Hot Water Storage

For Technical help or for Service call ...

ALPHA HELPLINE

Tel: (01322) 669443

Alpha BOILERS

Goldsel Road,
Swanley, Kent BR8 8EX
Fax: (01322) 615017

British Gas
Service Listed

WRc

CE 0051

Alpha 500E G.C. No. 47 532 07

Building Regulations
Certificate No. ETC 00795

For use with Natural Gas only

Leave these instructions with the User

CONTENTS

1 Introduction 2
2 Technical data 3
3 General boiler information 6
4 Installation 12
5 Commissioning 17
6 Boiler operation 19
7 Routine servicing 20
8 Component replacement 22
9 Wiring diagrams 29
10 Fault finding 31
11 Short parts list 35
12 Service history 36

1 INTRODUCTION

The Alpha 500E boiler is a wall mounted, fan assisted room-sealed combination boiler, incorporating a 54 litre unvented hot water storage cylinder. Heat output is controlled by a modulating gas valve, with fully automatic direct burner ignition.

The boiler, providing both central heating and domestic hot water at mains pressure, is designed for use with a fully pumped, sealed and pressurised heating system using **only Natural Gas**.

The boiler is supplied with a pump, diverter valve, pressure relief valve, expansion vessel and pressure gauge fully assembled and tested.

As supplied, the boiler will automatically modulate to provide central heating outputs between 10.4 and 28.0 kW (35 500 and 95 550 Btu/h).

The maximum output available for domestic hot water is 28.0 kW (95 550 Btu/h) and provides hot water at temperatures of up to 65°C and flow rates of up to 20 litres/min (4.4 gal/min).

IMPORTANT

This boiler has been approved to the Building Regulations for unvented hot water storage systems and the Local Authority must be notified of the intention to install. Therefore the installation must be carried out by a person competent to install unvented hot water systems.

It is the law that all gas appliances are installed by a competent person, ie CORGI registered personnel, in accordance with the following recommendations:-

Gas Safety (Installation and Use) Regulations 1984 (as amended)

All relevant Building Regulations issued by the Department of the Environment

Building Standards (Scotland) (Consolidation) Regulations issued by the Scottish Development Department

Local Water Bye Laws

Health & Safety Document No. 635 (The Electricity At Work Regulations 1989)

The installation should also be in accordance with the following British Standard Codes of Practice:-

BS 5440:1:1990	Flues
BS 5440:2:1989	Air supply
BS 5449:1990	Forced circulation hot water systems
BS 5546:1990	Installation of hot water supplies for domestic purposes
BS 6700:1987	Design, installation, testing and maintenance of services supplying water
BS 6798:1987	Installation of gas fired hot water boilers
BS 6891:1989	Gas installation
BS 7593:1992	Code of Practice for treatment of water in heating systems
BS 7671:1992	Requirements for electrical installations, IEE Wiring Regulations

If installation is in a timber framed building, refer to the British Gas publication 'Guide for Gas Installations in Timber Frame Housing' reference DM2.

This appliance meets the requirements of IP20, ie degree of protection against moisture.

Failure to install this appliance correctly could lead to prosecution. It is in your own interest and that of safety to ensure that the law is complied with.

Manufacturer's instructions must **NOT** be taken in anyway as over-riding statutory obligations.

Note: Ensure that the Benchmark Log Book has been completed after the boiler has been installed and commissioned.

Notes: 1. Prior to installation ensure the appliance is stored upright in dry conditions and is transported in an upright position.
2. Ensure the appliance has been supplied with the unvented package and flue system.

2 TECHNICAL DATA

2.1 PERFORMANCE - NATURAL GAS (Cat I_{2H})

Central Heating			MAX.	MIN.
Heat Input		kW	34.5	13.2
(Gross)		Btu/h	117 700	45 000
Heat Output (modulating)		kW	28.0	10.4
		Btu/h	95 550	35 500
Burner Pressure Settings	Room sealed chamber panel fitted	mbar	10.8	1.9
		in wg	4.32	0.76
	Room sealed chamber panel removed	mbar	11.5	2.6
		in wg	4.6	1.04
Gas Rate		m³/h	3.25	1.24
		ft³/h	114.8	43.9
CH Water Temp. (Approx.)		°C	82	30
		°F	180	86

Domestic Hot Water			MAX.	MIN.
Heat Input		kW	34.5	13.2
(Gross)		Btu/h	117 700	45 000
Output to Water (modulating)		kW	28.0	10.4
		Btu/h	95 550	35 500
Burner Pressure Settings	Room sealed chamber panel fitted	mbar	10.8	1.9
		in wg	4.32	0.76
	Room sealed chamber panel removed	mbar	11.5	2.6
		in wg	4.6	1.04
Gas Rate		m³/h	3.25	1.24
		ft³/h	114.8	43.9
Flow Rate		L/min	20.0	1.0
		G.P.M.	4.4	0.22
Outlet Water Temp. (Approx.)		°C	65	5
		°F	149	41
Time to raise water storage 50°C			12.0 minutes	
Reheat time for 70% of storage			5.0 minutes	

2.2 SYSTEM

Central Heating (Sealed System)	
Max. Working System Pressure	2.5 bar
Min. System Pressure	0.5 bar
Max. System temperature	82°C
Pressure Relief Valve Setting	3 bar (44 PSI)
Expansion Vessel Size (pre-charge press.)	7.5 L at 0.8 bar
Flow Connection	22 mm
Return Connection	22 mm
Relief Valve Connection	15 mm
Recommended System Pressure (cold)	1.0 bar

Domestic Hot Water	
Max. Hot Water Pressure	8 bar
Max. Mains Inlet Pressure (inlet of pressure reducing valve)	16 bar
Min. Mains Water Pressure	0.1 bar
Mains Inlet Connection	15 mm
DHW Outlet Connection	15 mm
DHW Water Storage	54 L
Expansion Vessel Size (pre-charge press.)	5L at 3.5 bar
Pressure Reducing Valve Setting	3.5 bar
Temperature and Pressure Relief Valve	90°C/7 bar
Expansion Relief Valve Setting	6 bar

2.3 COMPONENTS

Burner (18 blade)	Stainless steel
Main Heat exchanger	Copper
DHW Storage Cylinder	Stainless Steel
Main Burner Injectors	1.18 mm
Flue - Outer Duct	Epoxy coated
Flue - Inner Duct	Aluminium

2.4 INSTALLATION

Minimum Clearances for Servicing		
	Top	200 mm
	Bottom	250 mm
	Side (L/H)	20 mm
	Side (R/H)	5 mm
	Front	450 mm
Flue Terminal Size		100 mm Dia.
Flue Terminal Protruding		115 mm
Hole Size Required For Flue Assy.		110 mm Dia.
Lift Weight		70 kg
Weight Full and Operational		130 kg

2.5 GENERAL

Dimensions	Height	950 mm
	Width	600 mm
	Depth	450 mm
Gas Connection		22 mm
Primary Water Content		3.2 L
Air Duct Diameter		100 mm
Flue Duct Diameter		60 mm

2.6 ELECTRICAL

Supply	230/240 V ~ 50 Hz
External Fuse	3 A
Power Consumption	190 W
Internal Fuse	F2 A
Electrode Spark Gap	2.0 to 3.5 mm

2.7 FLUE LENGTHS

Flue length = 0.75 m (not including the terminal, which is supplied with the boiler)

Note: Additional flues (of the same length) are available.

Length of Flue Required:-

Rear Flue = wall thickness +115 mm

Side Flue = wall thickness + distance between wall and side of boiler + X mm (L/H side X = 380, R/H side X = 130)

Vertical Flue = distance from top of boiler side panel to required roof position minus 1 m for vertical terminal assembly

Maximum flue length = 4 m horizontal or 4 m vertical.

Each additional 90° Bend is equivalent to 1 m of flue length.

Each 45° Bend is equivalent to 0.5 m of flue length.

The Vertical Flue terminal assembly is equivalent to 1 m of flue length.

2.8 AVAILABLE PUMP HEAD FOR CENTRAL HEATING

Output		Available pump head				Flow rate				Pressure loss across boiler			
kW	Btu/h	17°C		20°C		17°C		20°C		17°C		20°C	
		metres	feet	metres	feet	litre/min	gal/min	litre/min	gal/min	metres	feet	metres	feet
28.00	95563	1.0	3.28	2.1	6.9	21.7	4.8	18.4	4.1	3.5	11.5	2.7	8.9
23.44	80 000	2.2	7.22	3.4	11.1	18.3	4.0	15.2	3.4	2.6	8.5	1.8	5.9
17.58	60 000	3.6	11.8	4.2	13.7	14.82	3.27	12.60	2.78	1.6	5.2	1.2	3.9
14.65	50 000	4.2	13.7	4.6	15.1	12.35	2.73	10.50	2.32	1.2	3.9	1.0	3.3
11.72	40 000	4.8	15.7	5.1	16.7	9.88	2.18	8.40	1.86	0.9	2.9	0.7	2.3
10.40	35 495	5.0	16.4	5.3	17.3	8.77	1.94	7.45	1.65	0.8	2.6	0.6	2.0

This information is based on 17°C and 20°C system design temperature difference.

2.9 ELECTRICAL CONNECTIONS

Note: This Appliance Must Be Earthed

An optional integral Clock kit is available if required.

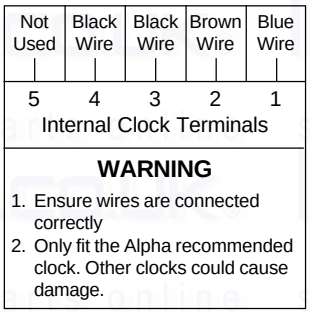

Clock connections

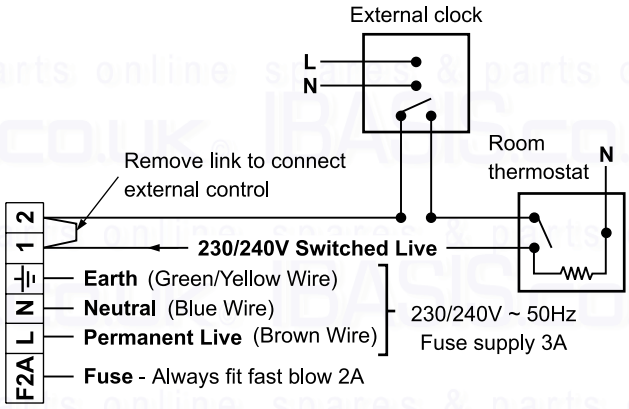

Boiler terminal block

Fig. 1

2.10 BOILER SCHEMATIC

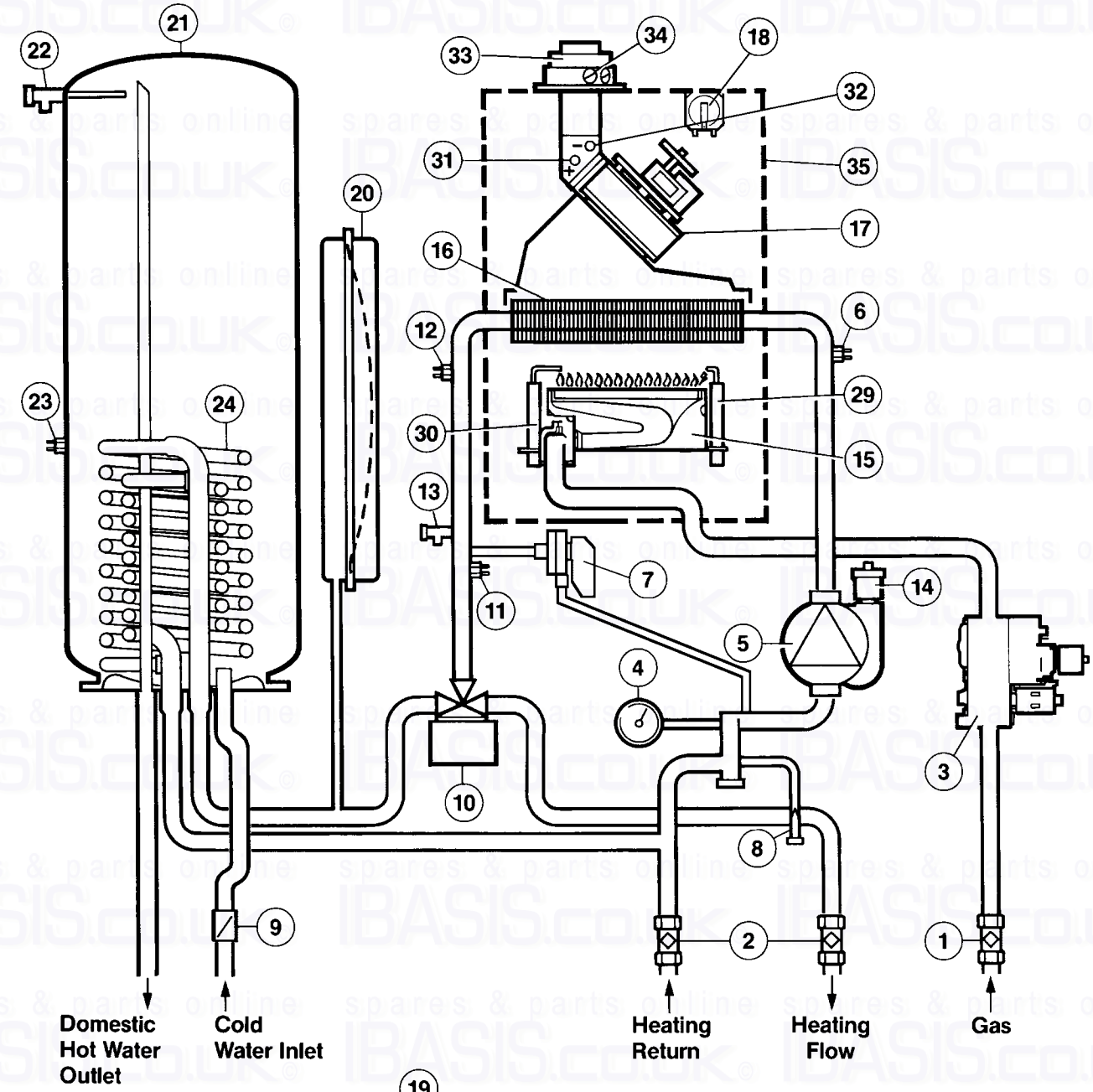

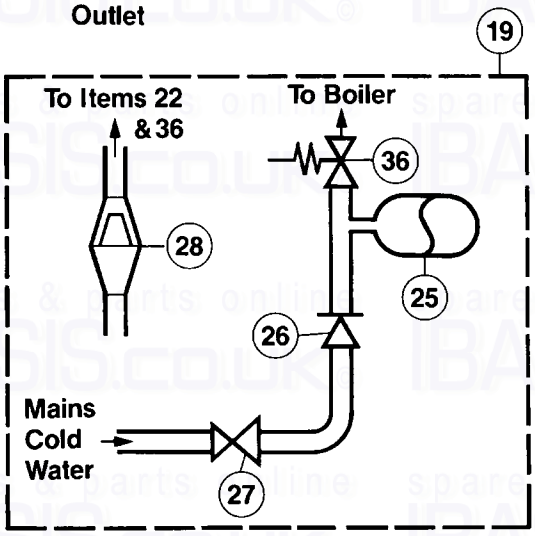

1. Gas Service Cock
2. Heating On/Off Valve
3. Gas Valve
4. Pressure Gauge
5. Pump and Air Separator
6. Primary Return Temperature Sensor
7. Differential Water Flow Switch
8. Adjustable By-Pass
9. Flow restrictor
10. 3-Port Diverter Valve
11. Primary Flow temperature Sensor
12. Overheat Thermostat
13. C.H. Pressure Relief Valve
14. Auto Air Vent
15. Main Burner
16. Main Heat Exchanger
17. Fan
18. Air pressure Switch
19. Unvented Kit
20. C.H. Expansion Vessel
21. Storage Cylinder
22. Temperature/Pressure Relief Valve
23. Hot Water Storage Temperature Sensor
24. Secondary Heat Exchanger
25. DHW Expansion Vessel
26. Check Valve
27. Pressure Reducing Valve with Filter
28. Tundish
29. Ignition Electrodes
30. Flame Sensing Electrodes
31. Positive Pressure Point
32. Negative Pressure point
33. Flue Adaptor
34. Flue Sample Point
35. Room Sealed Chamber
36. Expansion Relief Valve

Fig. 2

3 GENERAL BOILER INFORMATION

3.1 GAS SUPPLY

The boiler requires a gas rate of 3.25 m³/h (114.8 ft³/h).

The meter and supply pipes must be capable of delivering this quantity of gas in addition to the demand from any other appliances in the house. The boiler requires at least a 22 mm gas supply pipe.

The complete installation, including the meter, must be tested for gas soundness and purged as described in BS 6891.

3.2 ELECTRICAL SUPPLY

The boiler requires a 230/240 V ~ 50 Hz mains supply, fused at 3 A

The boiler must be earthed.

There must only be one common isolator, providing complete electrical isolation, for the boiler and any external controls.

Using PVC insulated cable not less than 0.75 mm² (24 x 0.2 mm) to BS 6500 Table 16, the boiler should be connected to a fused three pin plug and unswitched shuttered socket outlet (both complying with BS 1363), or a fused double pole switch with a contact separation of at least 3 mm in both poles.

Wiring external to the boiler must be in accordance with the current IEE Wiring Regulations (BS 7671).

Note: If a room thermostat is fitted, it must be suitable for 240 V switching

3.3 AIR SUPPLY

The boiler does not require any air vents in the room in which it is installed. If the boiler is installed in a cupboard or compartment, permanent air vents are required in the cupboard or compartment at high and low levels. The vents must communicate with the same room or be direct to outside air on the same wall.

Position of vent	Air from room/internal space	Air direct from outside
High	310 cm² (48 in²)	155 cm² (24 in²)
Low	310 cm² (48 in²)	155 cm² (24 in²)

If the boiler is installed in a cupboard or compartment with a door, allow at least 75 mm clearance between the front of the boiler and the door for air movement.

3.4 FLUE SYSTEM - Fig. 3

The flue system must be installed in accordance with BS 5440:1.

The flue assembly supplied for the boiler is 0.75 m in length.

For horizontal flues ensure there is a slight downward slope towards the terminal.

Additional flue components are available as follows:-

0.75 m flue
90° bend
45° bend
Vertical flue terminal assembly. Refer to the separate installation instructions supplied with the assembly.
A Twin Pipe Flue system and an Easy Flue system are available for use with the boiler. Refer to the separate instructions for details.

The following methods determine the correct length of flue required.

For rear exit flue L = B + 115 mm

For side exit flue L = B + C + X mm (L/H side X = 380, R/H side X = 130).

For vertical flue L = H minus 1000 mm for vertical terminal assembly

Where L = Required flue length
B = Finished wall thickness
C = Distance from the inside wall to the side of the boiler
H = Distance from top of boiler side panel to roof position

Notes:
1. If an extra 90° bend is used, this reduces the maximum flue length by 1 m. Each 45° bend used reduces the maximum flue length by 500 mm.
2. Minimum side clearance required is L/H side 20 mm, R/H side 5 mm.
3. Under no circumstances must the flue length (including allowances for extra bends) exceed the maximum recommended length.
4. Failure to use Alpha flue components with the boiler will invalidate the boilers CE approval, warranty and may be unsafe.

HORIZONTAL FLUE OPTIONS

Lmax = 4 metres, For L/H side flue X = 380, for R/H side flue X = 130

L = B + C + X mm

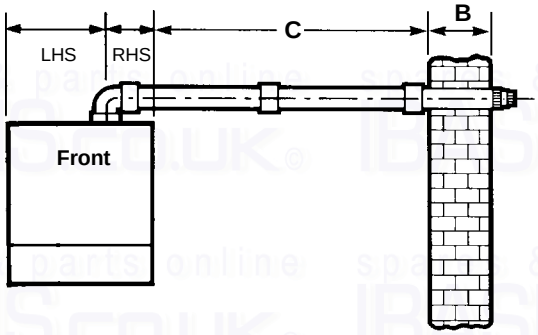

L = B + C + E + X mm

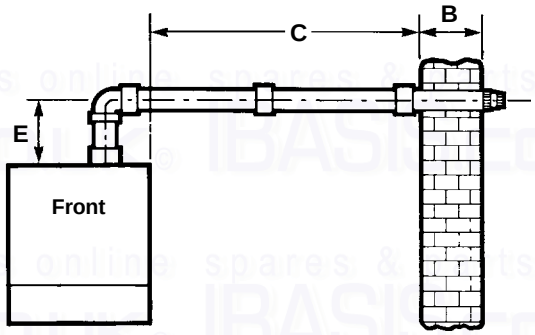

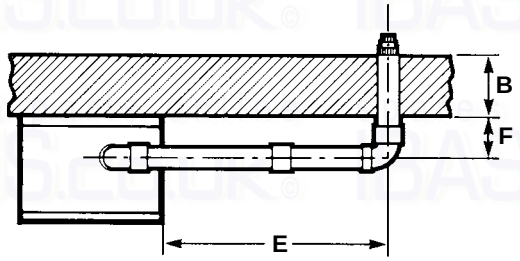

L = B + E + F + X mm + (90° bend = 1 metre)

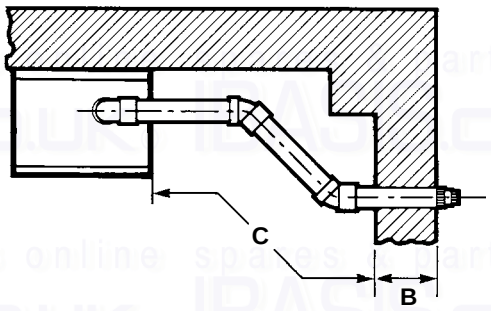

L = B + C + X mm + (2 x 45° bends = 1 metre)

VERTICAL FLUE OPTIONS

Hmax = 4 metres

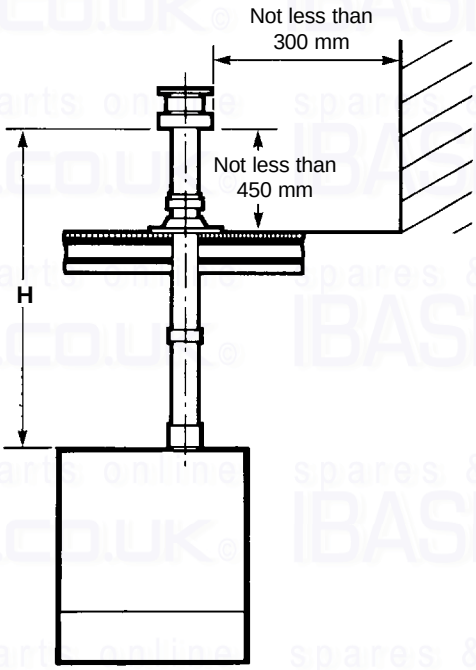

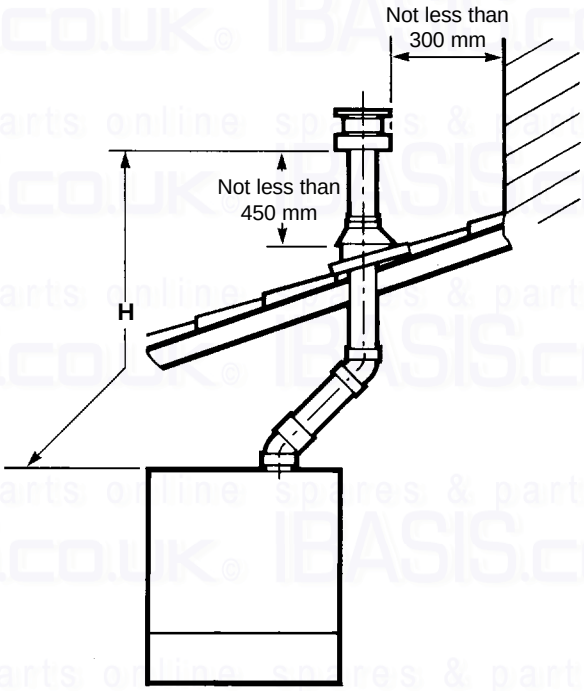

Fig. 3

3.5 FLUE TERMINAL LOCATION - Fig. 4

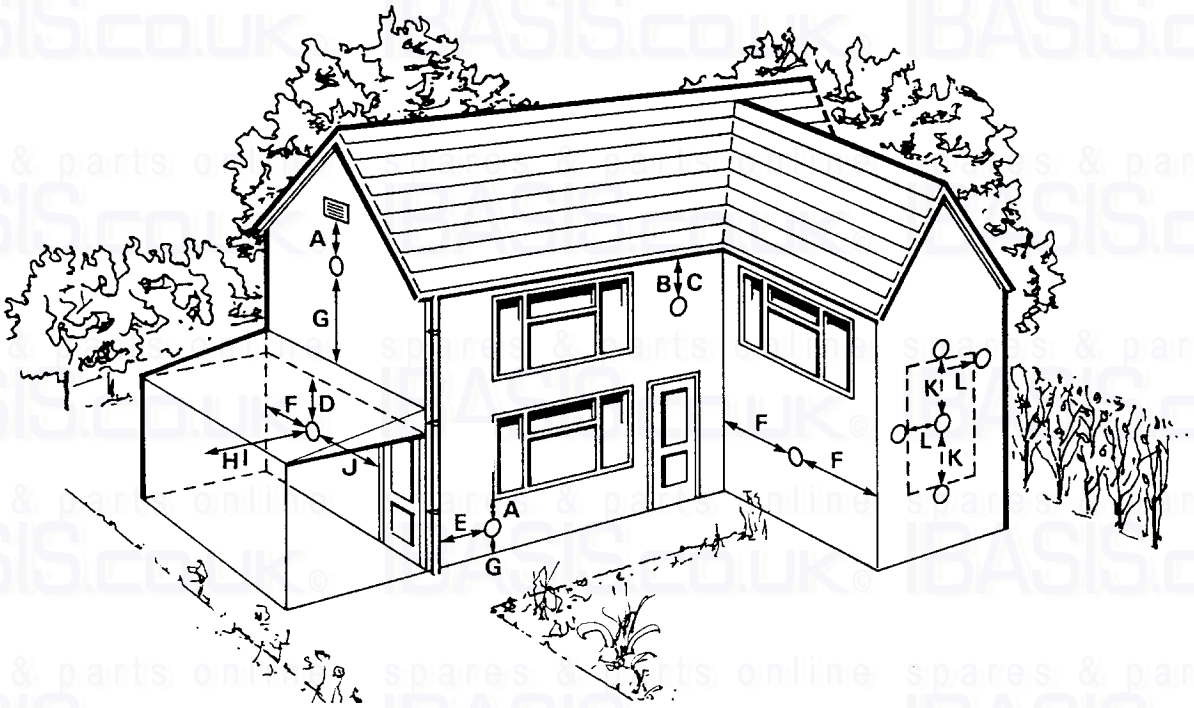

Fig. 4

	Terminal position	Min. distance
A	Directly below an opening, air brick, windows, etc.	300 mm
B	Below gutters, soil pipes or drain pipes	75 mm
C	Below eaves	25 mm
D	Below balconies or car port roof	25 mm
E	From a vertical drain pipe or soil pipe	25 mm
F	From an internal or external corner	25 mm
G	Above ground, roof or balcony level	300 mm
H	From a surface facing the terminal	600 mm
I	From a terminal facing the terminal	1200 mm
J	From an opening in the car port (e.g. door, window) into dwelling	1200 mm
K	Vertically from a terminal on the same wall	1500 mm
L	Horizontally from a terminal on the same wall	300 mm

The flue terminal must be exposed to the external air and the position must allow the free passage of air across it at all times. In certain weather conditions the terminal may emit a plume of steam. Avoid positioning the terminal where this may cause a nuisance.

If the terminal is fitted within 850 mm of a plastic or painted gutter or 450 mm of painted eaves, an aluminium shield at least 1 m long should be fitted to the underside of the gutter or painted surface. If the terminal is fitted less than 2 m above a surface to which people have access, the terminal must be protected by a terminal guard.
A suitable guard (type K3 - G.C. No. 393 554) is available from:
Alpha Therm Ltd., Goldsel Road, Swanley, Kent BR8 8EX, or Tower Flue Components Ltd., Vale Rise, Tonbridge, Kent TN9 1TB

3.6 BOILER LOCATION

The boiler is not suitable for external installation.

The boiler must be installed on a flat vertical wall which is capable of supporting the weight of the boiler, i.e. 130 kg.

If the boiler is to be fitted in a timber framed building, it should be fitted in accordance with the British Gas publication 'Guide for Gas Installations in Timber Frame Housing', reference DM2.

The boiler may be installed in any room or internal space, although particular attention is drawn to the requirements of the current IEE Wiring Regulations, and in Scotland, the electrical provisions of the Building Regulations applicable in Scotland, with respect to the installation of the boiler in a room or internal space containing a bath or shower. Where a room-sealed boiler is installed in a room containing a bath or shower, it must not be possible for a person using the bath or shower to touch any electrical switch or boiler control utilising mains electricity.

The boiler may be installed in a cupboard or compartment, provided it is correctly designed and sufficiently ventilated for that purpose and that the requirements of BS 6798 and BS 5440:2 are complied with.

3.7 CENTRAL HEATING SYSTEM - Fig. 5

The boiler is designed for use in a sealed central heating system in accordance with the requirements of BS 5449 and BS 6798.

The system should be designed to operate with flow temperatures of up to 82°C. When designing the system, the pump head, expansion vessel size, mean radiator temperature, etc. must all be taken into account. Refer to the pump performance table for guidelines.

System volume - The expansion vessel incorporated into the boiler is suitable for a sealed heating system with a maximum water content of 80 litres (18 gal). For guidance on water contents contact Alpha Therm Ltd. for Technical Data Sheet 15. Above 80 litres, consideration should be given to fitting an additional expansion vessel fitted in the position shown in Fig. 5. To check correct operation of the expansion vessel(s) the system pressure should not be more than 2.5 bar when the system is at maximum operating temperature (for further guidance refer to BS 7074:1).

The boiler is supplied with the following components built in:-

CH Pressure relief valve - complying with BS 6759 and set to operate at 3 bar. The discharge pipe must be routed clear of the boiler to a drain, in such a manner that it can be seen, but cannot cause injury to persons or property.

Pressure gauge - to indicate the system pressure to be maintained.

Expansion vessel - conforming to BS 4814 with a capacity of 7.5 litres and pre-charged to a pressure of 0.5 bar.

By-pass - The boiler incorporates an adjustable by-pass. However, where all radiators are fitted with thermostatic radiator valves, an external by-pass may be required.

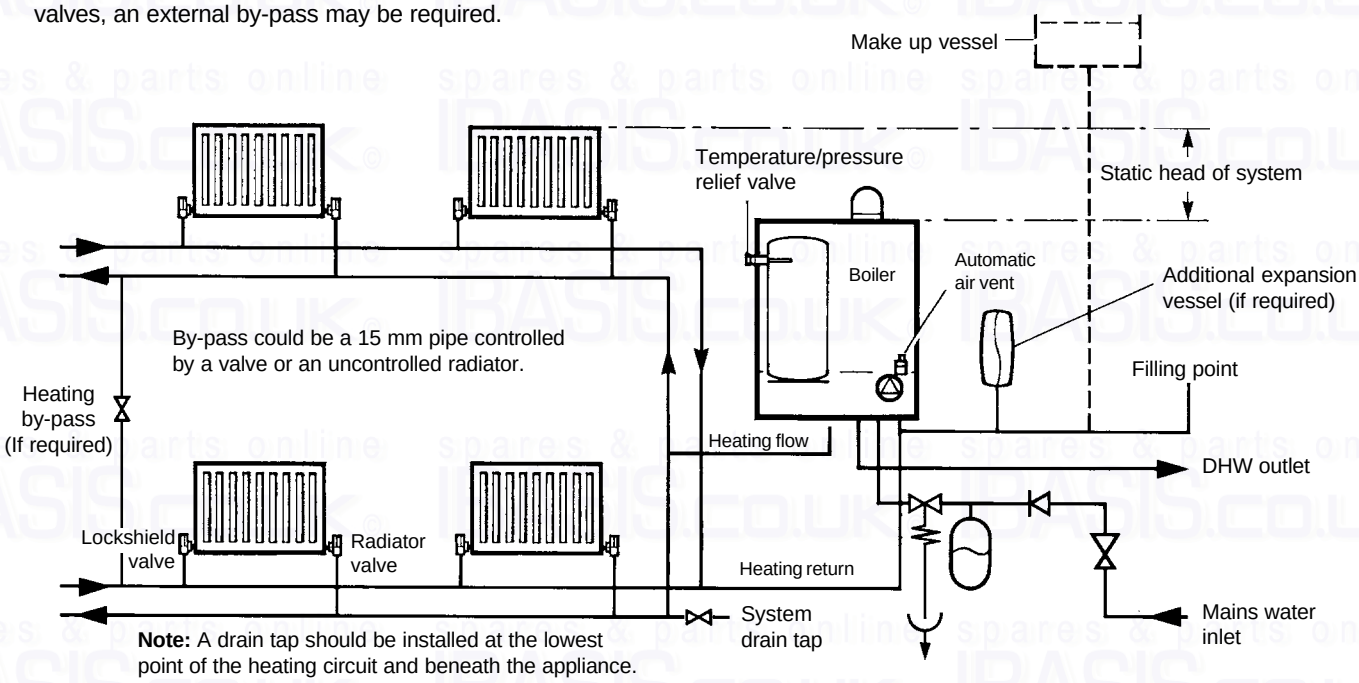

Fig. 5

3.8 FILLING THE CENTRAL HEATING SYSTEM - Figs. 6, 7

The system design pressure (cold) should be set to 1.0 bar. This pressure is equivalent to the maximum static head (see Fig. 5) of 10.2 metres of water.

Provision should be made to replace water lost from the system. This can be by manual or automatic means, as shown in Figs. 6 and 7. The position for connecting an automatic make-up vessel is indicated in Fig. 5. A double check valve assembly must be used, as shown in Fig. 7.

Filling of the system must be carried out in a manner approved by the local Water Undertaking. Where allowed, the system may be filled via a temporary connection as shown in Fig. 6. After filling, always disconnect the flexible hose of the filling loop.

All fittings used in the system must be able to withstand pressures up to 3 bar.

Drain taps (to BS 2879) must be used to allow the system to be completely drained.

The heating system should be thoroughly flushed before the boiler is connected and again after the first heating.

If it is necessary to add inhibitor to the central heating system, contact Alpha Therm Ltd. for guidance.

Refer to BS 5449 and BS 6798 for further information.

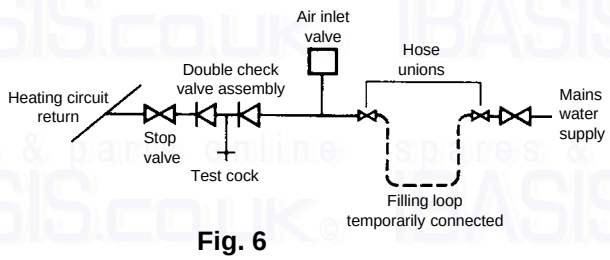

Fig. 6

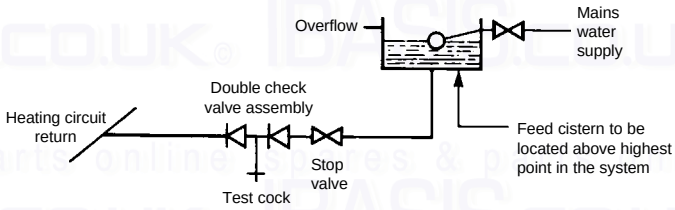

Fig. 7

3.9 DOMESTIC HOT WATER SYSTEM

The mains water supply must be first connected to the components detailed in section 3.10 before the boiler. No valves must be fitted between these components and the boiler. The incoming mains water pressure to the boiler is regulated to 3.5 bar by the pressure reducing valve supplied in the unvented package. However, all taps and mixing valves used with the hot water system must be suitable for operating at a pressure of up to 8 bar.

To ensure economic use, the pipe runs between the boiler and taps should be in 15 mm copper pipe and be as short as possible. Where possible the pipework should be insulated to reduce heat loss.

Showers - A shower may be used with the boiler if required.
If a loose or flexible head type shower is used it may require the fitting of a double check valve, to comply with Water Bye Law 17.

Bidets - No anti-syphonage arrangements are necessary, provided the outlets are shrouded and it is not possible to attach a temporary hand held spray. A supply of direct mains fed hot and cold water is permitted provided the appliance is of the over-rim flushing type.

Before the mains water supply pipe is connected to the boiler, it should be thoroughly flushed out to avoid the danger of dirt or foreign matter entering the boiler and the filter incorporated within the pressure reducing valve cleaned.

The stored water temperature is adjustable to a maximum of 65°C. In hard water areas this should avoid possible scale build-up, although it is still advisable to reduce the DHW thermostat setting in such areas. However, if descaling is necessary contact Alpha Therm Ltd. for guidance.

3.10 UNVENTED HOT WATER STORAGE SYSTEM

To comply with the Building Regulations for unvented hot water storage, it is required that the components detailed in Fig. 8 are fitted before the mains cold water inlet to the boiler. No isolating valves must be fitted between these components and the boiler.

All these components are supplied with the boiler in a separate package and must be fitted by a competent person in accordance with the instructions.
The installation is subject to Building Regulations approval and the Local Authority must be notified of the intention to install.

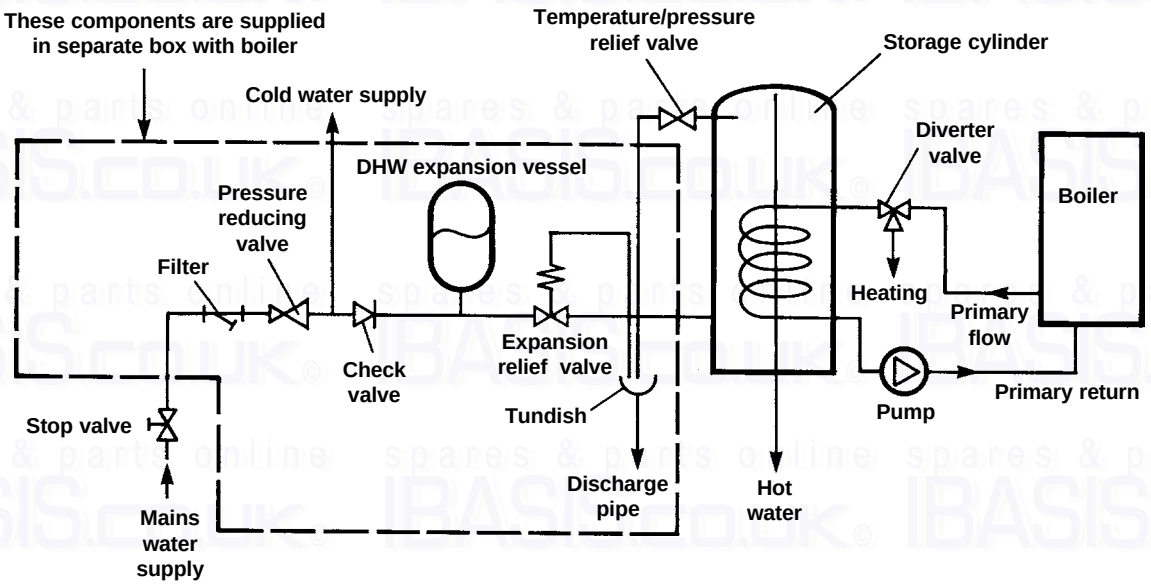

Fig. 8

Discharge pipe - The discharge pipes from the temperature/pressure and expansion relief valves must be routed to the tundish supplied and in 15 mm pipe. The discharge pipework from both relief valves may be joined together in the same sized pipe, providing at least 22 mm pipework is connected downstream of the tundish.

Tundish - The tundish must be positioned within 500 mm horizontally of the temperature/pressure relief valve, so that it is visible to the User and away from electrical devices. The minimum size of the discharge pipe downstream of the tundish is given in the following table.

Sizing of copper discharge pipe 'D2' - refer also to Fig. 9				
Valve outlet size	Minimum size of discharge pipe 'D1' to tundish	Minimum size of discharge pipe 'D2' from tundish	Maximum resistance allowed, expressed as a length of straight pipe (i.e. no elbows or bends)	Resistance created by each elbow or bend
G½	15 mm	22 mm	up to 9 m	0.8 m
		28 mm	up to 18 m	1.0 m
		35 mm	up to 27 m	1.4 m

The discharge pipework from the tundish:-

1. Shall fall continuously through its length.
2. Shall be of a heat resistant material, e.g. metal.
3. Shall not be fitted with any valves or taps.
4. Shall discharge to a safe visible position, e.g. onto the surface of an external wall or into a gulley.
5. Shall have a minimum of 300 mm straight pipework directly from the tundish.

Note: Where children may play or otherwise come into contact with discharges, a wire cage or similar guard must be positioned to prevent contact whilst maintaining visibility.

Refer to Fig. 9 for suggested methods of terminating the discharge pipe safely.

Where a single pipe serves a number of discharges, such as in blocks of flats, the number served should be limited to not more than 6 systems so that any installation can be traced reasonably easily. The single common discharge pipe should be at least one pipe size larger than the largest individual discharge pipe to be connected.

If the system is installed where discharges from safety devices may not be apparent, i.e. in dwellings occupied by blind, infirm or disabled people, consideration should be given to the installation of an electronically operated device to warn when discharge takes place.

LOW LEVEL TERMINATION

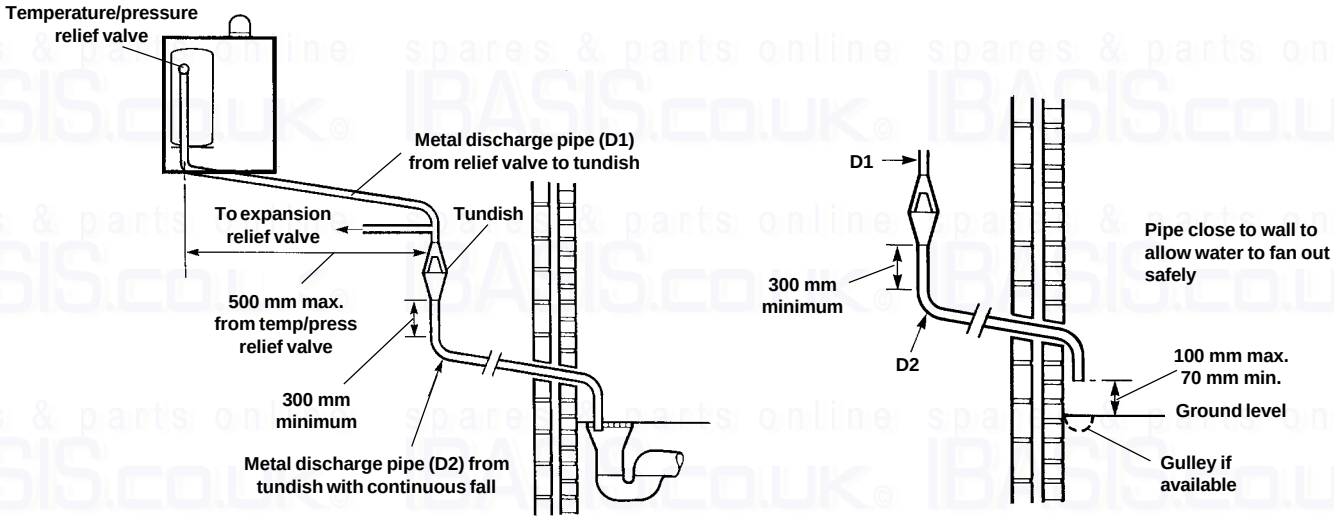

HIGH LEVEL TERMINATION

At high level, discharge onto a roof is acceptable providing the roof is capable of withstanding high temperatures and there is a distance of 3 m from any plastic guttering systems that would collect such discharge.

Note: The discharge will consist of scalding water and steam. Asphalt, roofing felt and non-metallic rainwater goods may be damaged by such discharges.

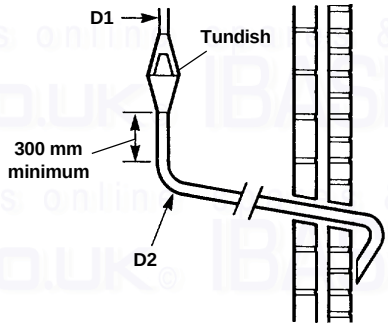

TERMINATION INTO A HOPPER

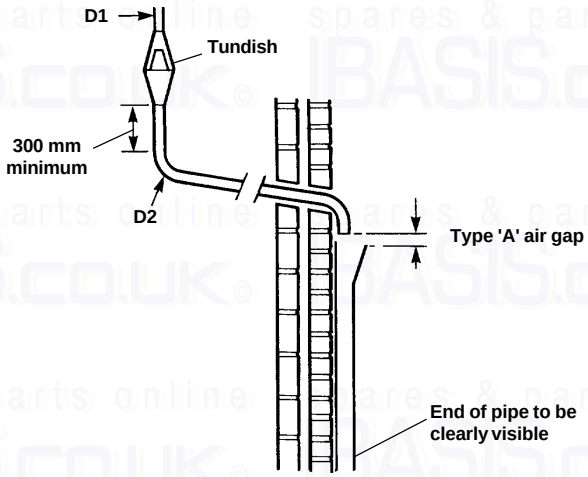

Fig. 9

4 INSTALLATION

4.1 UNPACKING

1. The boxes required when the boiler is installed with a horizontal flue are as follows:-

   Box 1 Cased boiler
   Water and gas valves plus washers
   Water fittings
   Mounting bracket plus screws and wall plugs
   Flue terminal and wall sealing plate plus 2 screws and mastic
   Literature pack and Wall template

   Box 2 90° flue bend with clamp (not required for vertical flue)

   Box 3 0.75 m flue (for side and rear flue) with two clamps and inner duct support

   Box 4 Pressure reducing valve
   5 litre expansion vessel, mounting bracket plus screws and wall plugs
   Tundish
   Expansion relief valve/check valve

2. Unpack boiler and remove loose items packs.
3. Remove the two screws at the top of the front casing. Slide it up and lift it off.

4.2 CLEARANCES REQUIRED - Fig. 10

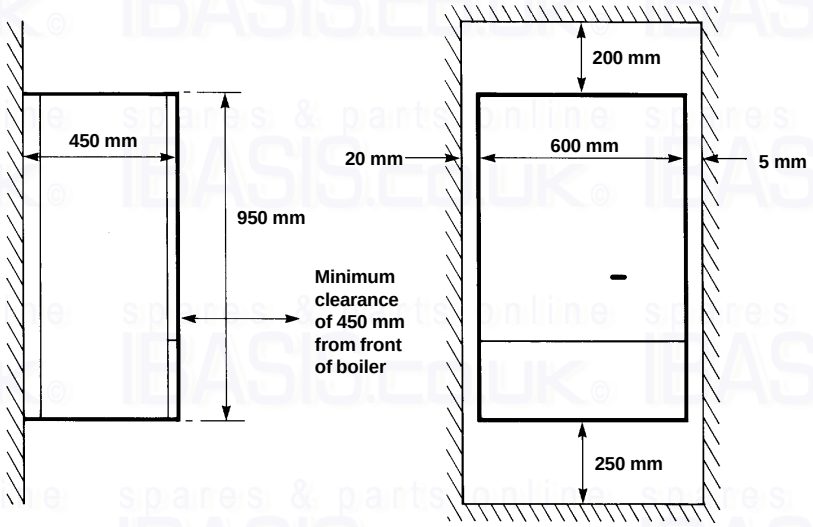

Fig. 10

4.3 PREPARE THE WALL - Fig. 11

1. Decide upon the position of the boiler taking into account the clearances required for servicing and the flue terminal position.
2. Tape the template to the wall (ensure it is level and the right way up) and mark the position of the holes for the boiler mounting bracket and bottom fixings. If rear exit flue is used, mark the position of the hole for the flue.
3. If side exit flue is to be used, continue the horizontal centre line of the flue across the wall to the side wall, then along the side wall 160 mm (ensure the lines are horizontal). This will give the position of the centre of the hole for the flue.
4. Cut the 110 mm diameter hole in the wall for the flue.
5. Drill the fixing holes (8 mm dia.) to accept the plugs supplied. Using the washers supplied with the screws, fit the mounting bracket.

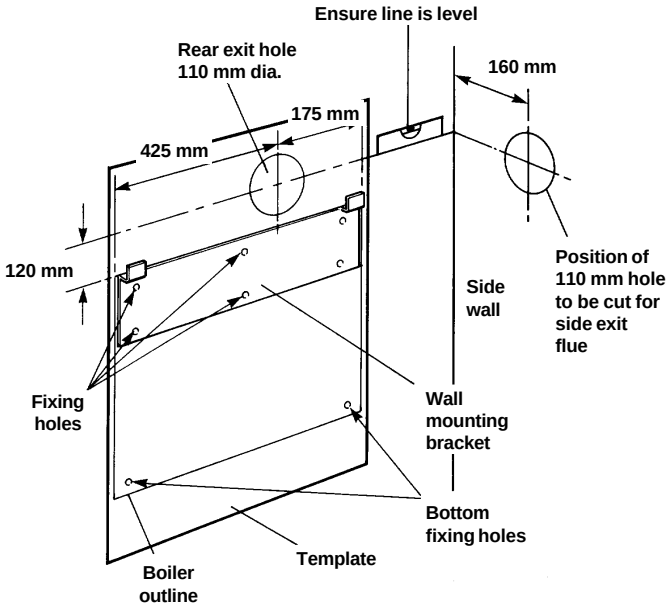

Fig. 11

4.4 FIT THE BOILER - Refer to Fig. 11

1. Lift the boiler and locate it on the mounting bracket.
2. Adjust the position of the boiler, as necessary. Fit the bottom screws to secure the boiler in position.

4.5 FIT THE UNVENTED KIT (BOX 4) - Fig 12

1. Unpack Box 4 and check the contents.
2. Locate the expansion vessel mounting bracket in a suitable position as close to the boiler as possible and secure in position with the screws and wall plugs provided.
3. Secure the expansion vessel to the mounting bracket using the metal band, nut, washers and bolt.
4. Connect the expansion relief valve to the expansion vessel as shown in Fig. 12.

   Notes: 1. The plug must be removed from the capped connection on the expansion vessel relief valve to enable connection to the expansion vessel.
   2. Mount the valve in either the horizontal or vertical orientation. An inverted orientation may allow debris deposits onto the valve seating and cause the valve to malfunction.
   3. Ensure the valve is mounted correctly, i.e. the arrow marking on the valve body is pointing in the direction of flow.
5. Connect the mains water supply to the pressure reducing valve and thoroughly flush out the water pipework.
   Refer to Domestic Hot Water System, section 3.9.

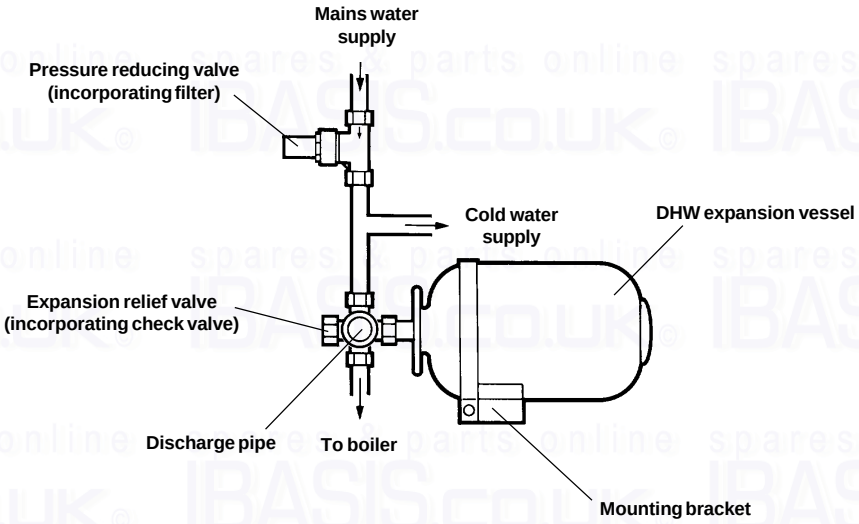

Fig. 12

4.6 CONNECT THE PIPEWORK - Fig. 13

1. Thoroughly flush out all the water pipework.
   Ensure that all the plastic caps are removed from the boiler connections.
2. Secure all the valves/fittings to the boiler- use the washers supplied, ensuring they are facing the rear wall. Fit the union bends to the valves.
   Note: If soldering to the boiler union bends, ensure that the bends are not connected to the valves, otherwise the internal seals may be damaged.
3. Connect the pipework from the boiler to the unvented kit.
   Note: No valves must be fitted between the boiler and the unvented kit.
4. Connect the system pipework to the boiler and the discharge pipe to the heating system pressure relief valve.
   Do not forget that the pressure relief valve discharge pipe must be routed clear of the boiler to a drain in such a manner that it may be seen, but cannot cause injury to persons or property.
5. Connect the discharge pipework to the temperature/pressure relief and expansion relief valves via the tundish supplied.
   This pipework must be installed as recommended in Unvented Hot Water Storage System, section 3.10.
6. Ensure that all the valves are closed (spindle flats at right angles to valve) and do not turn on the water or gas supplies at this stage.

A - Hot water outlet (15 mm)
B - Cold water inlet (15 mm)
C - Heating return (22 mm)
D - Heating flow (22 mm)
E - Gas inlet (22 mm)
F - Heating pressure relief valve (15 mm)
G - Heating return filter and drain point
H - Adjustable heating by-pass
I - Drain point for DHW storage
J - Flow restrictor housing

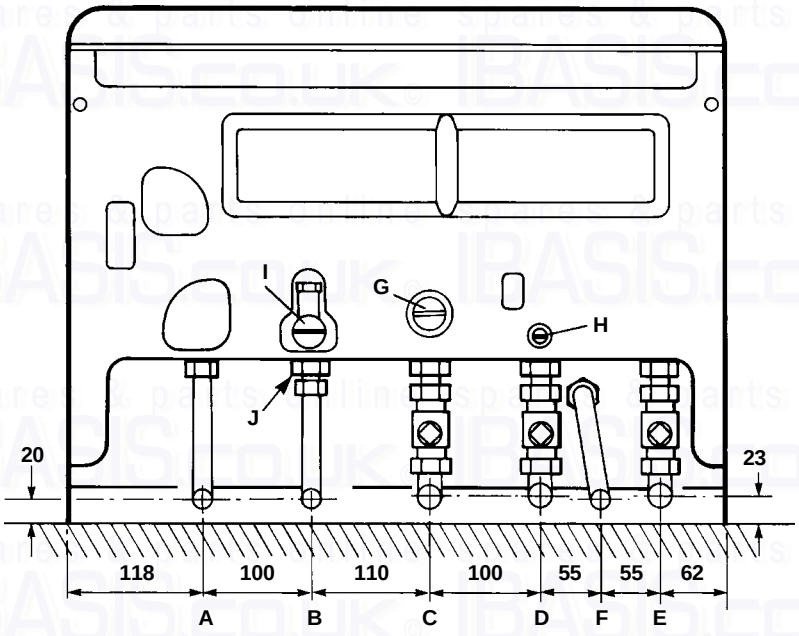

Fig. 13

4.7 FIT THE FLUE - Figs. 14, 15

1. The following procedure applies to both rear or side exit flue. The only difference being the lengths to which the ducts are cut.
   Rear flue Outer air duct length = finished wall thickness + 35 mm.
   Inner flue duct length = finished wall thickness + 112 mm.
   Side flue Outer air duct length = finished wall thickness + the distance from the inside wall to the side of the boiler + a mm.
   Inner flue duct length = finished wall thickness + the distance from the inside wall to the side of the boiler + b mm.
   Note: L/H side a = 300, b = 377. R/H side a = 50, b = 127.
2. If the overall length of the inner duct is greater than 750 mm, a flue extension is required. To fit an extension refer to the following section.
3. Withdraw the inner flue duct from the outer air duct.
4. Mark the outer air duct to match the length given above, measure from the end of the tube as shown in Figs. 14 and 15.
5. Mark the inner flue duct to match the length given above.
6. Cut both the inner and outer ducts to length.
   Note: Do not cut the outer duct end with the two holes, these are for securing the terminal.
   Ensure that all cuts are square and burr free.
7. Fit the flue terminal to the outer duct by inserting it into the end with two holes. Align the holes and secure with the two screws provided.
8. Place the inner flue duct back into the outer duct.
9. Pass the flue assembly through the wall (from inside or outside).
   Note: Internal fitting - If there is no access to make good the outside wall, locate and secure the flue sealing collar onto the outer duct of the flue immediately before the terminal. Push the flue assembly through the 127 mm flue hole, so that the collar completely passes through the wall. Then pull the flue assembly back into the correct position. Visually check that the collar is sealing the outside wall and that it is not restricting any of the openings of the flue terminal.
10. Position the seal and clamp (two screws), supplied with the bend, over the boiler flue adaptor. Fit the bend and rotate to the correct position, then secure in position. See Fig 14.
    Note: Ensure that the seal is located over both the bend and the flue adaptor.
11. Place the inner (no seal) duct clamp in position over the bend outlet as shown in Figs. 14, 15. Position the outer duct seal over the bend.
12. Push the outer duct into the wall slightly at the same time as pulling the inner duct towards the bend, inserting it fully into the clamp on the bend. Tighten the clamp to secure the inner duct.
13. Pull the outer duct towards the bend, to within 40 mm of the bend. Check that the flue terminal protrudes 115 mm out of the wall, then position the seal equally over the gap. Dismantle the clamp, position it over the seal and secure in position.
14. Make good the inside and outside walls. The flue sealing collar could be used for making good either the outside or inside by locating it over the outer duct of the flue and pushing it tight against the wall. If fitting the collar externally, ensure it does not restrict any of the openings of the flue terminal.

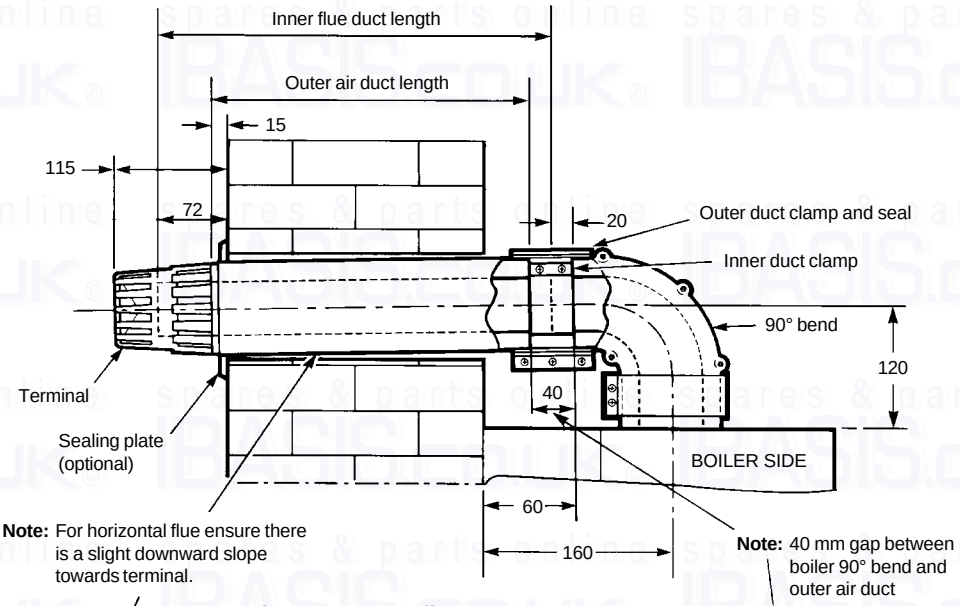

Fig. 14 - Rear flue

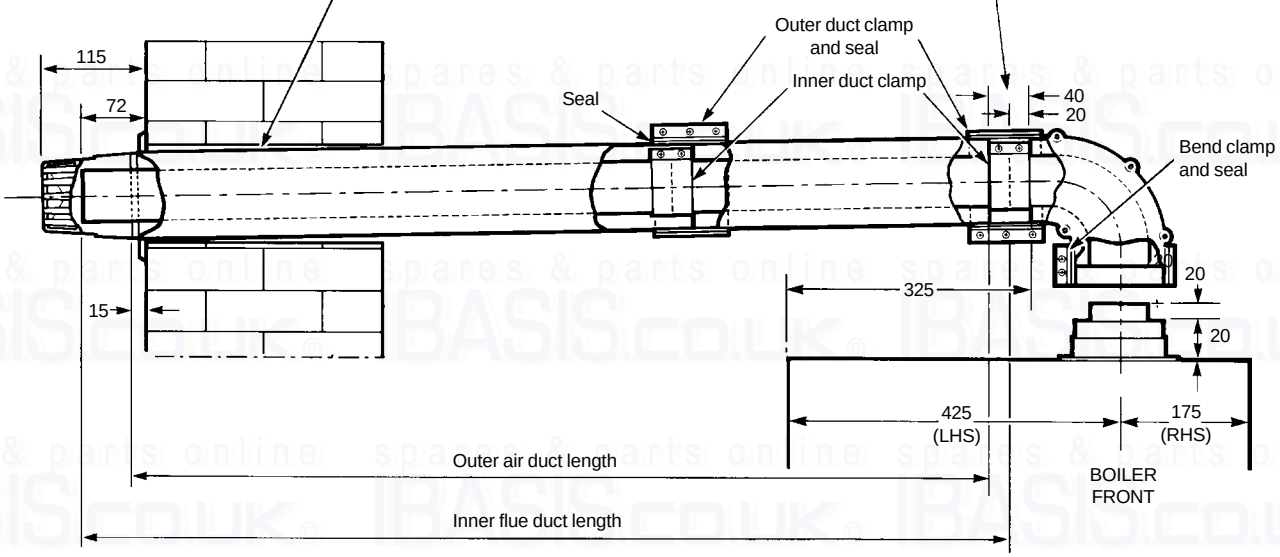

Fig. 15 - Side flue

4.8 FIT A FLUE EXTENSION - Figs. 14, 15

Note: The maximum flue assembly length must not exceed a length of 4 metres.

1. Withdraw the inner flue duct from the outer air duct supplied with the boiler.
2. Withdraw the inner flue duct from the extension. Secure the two ducts together using the clamp supplied with the extension, ensure that the ducts are butted together and the clamp is central over the joint.
3. Secure the outer ducts together using the silicone seal and clamp supplied with the extension. Lubricating the silicone seal with a soap solution will aid assembly.
4. With all the ducts assembled together, cut to the following lengths:-
   Rear flue Outer air duct length = finished wall thickness + 35 mm.
   Inner flue duct length = finished wall thickness + 112 mm.
   Side flue Outer air duct length = finished wall thickness + the distance from the inside wall to the side of the boiler + a mm.
   Inner flue duct length = finished wall thickness + the distance from the inside wall to the side of the boiler + b mm.
   Note: L/H side a = 300, b = 377. R/H side a = 50, b = 127.
5. When measuring the outer duct, measure from the end of the tube as shown in Figs. 14 and 15.
6. Cut both the inner and outer ducts to length.
   Note: Do not cut the outer duct end with the two holes, these are for securing the terminal.
   Ensure that all cuts are square and burr free.
7. Fit the flue terminal to the outer duct by inserting it into the end with two holes. Align the holes and secure with the two screws provided.

8. Place the inner flue duct back into the outer duct. Use the inner duct supports to centralise the duct in the outer duct.
9. Fit the flue assembly as described in the previous section. Due to the size of the flue clamps the flue must be fitted from inside the building.
10. It may be necessary to support the flue with suitable brackets (every metre) when flue lengths approaching the maximum are used.

4.9 CONNECT THE MAINS SUPPLY - Fig. 16

1. Gain access to the boiler terminal block by removing the two fixing screws (one each side) securing the control panel. Lower the control panel forwards on its hinge. Refer to Technical Data, section 2.9 for connection details.
2. Remove the screw securing the terminal block cover from the back of the control box (see Fig. 16). Pass the mains supply cable through the cable clamp, terminal block grommet and connect as follows:- Brown to L, Blue to N and Green/Yellow to ⏚. Ensure correct polarity.
   Note: Ensure that the length of the earth wire is such that if the supply cable is pulled out of its clamp the live and neutral wires become taut before the earth wire.
   The main terminal block can be removed by pulling it off the pins to give easy access to the terminals.
   Do not switch on the electrical supply at this stage.

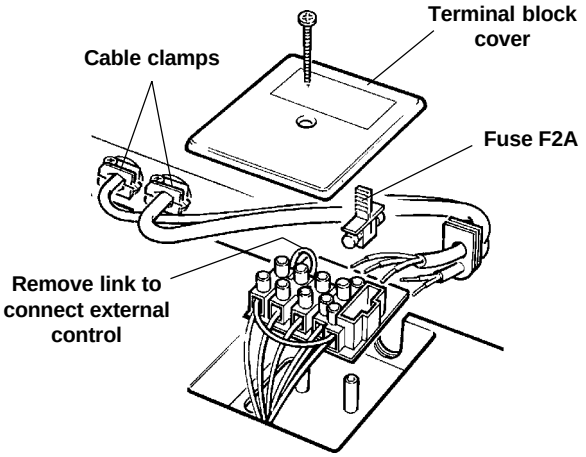

Fig. 16

3. If an external control, i.e. room thermostat or external clock is to be fitted, remove the terminal block cover and remove the link between terminals 1 and 2. Pass the cable through the cable clamp, through the grommet (cut as necessary) and connect it to terminals 1 and 2. (Refer to section 2.9).
4. Replace the terminal block, ensuring it is located correctly on the plastic pins and replace the cover.
5. Ensure that there is sufficient free cable to allow the control panel to be raised and lowered then tighten the cable clamp screws.
6. Leave the control panel open until commissioning procedures have been completed.
7. Carry out electrical system checks - Short circuit, Polarity, Earth continuity and Resistance to earth with a suitable multimeter.

4.10 FIT THE CLOCK KIT - Fig. 17

Ensure the electrical supply to the boiler is isolated.

1. Remove and discard the clock blanking panel.
2. Insert the clock into the opening and secure in place with the screws supplied.
3. Disconnect the clock wiring from the terminal block and connect it to the clock as follows:-
   Black wires to terminals 3 and 4, Brown to terminal 2 and Blue to terminal 1, (or as per the instructions supplied with the clock).
   Ensure wiring is correct.
4. Leave the control panel open until commissioning procedures have been completed.

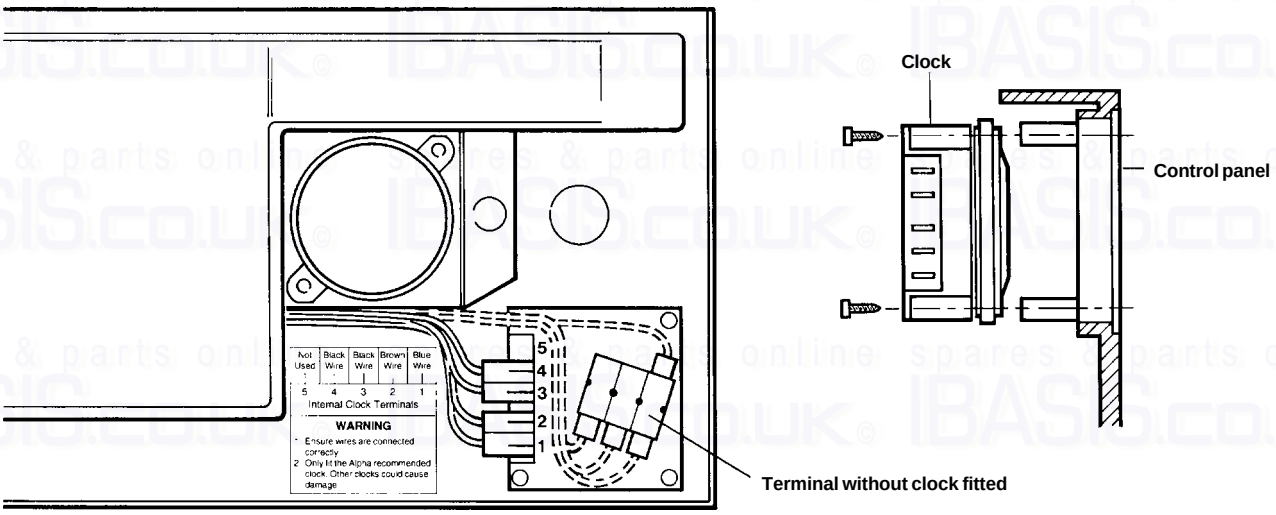

Fig. 17

5 COMMISSIONING

When commissioning the boiler, ensure the Benchmark Log Book is completed.

5.1 FILL THE SYSTEM

1. The boiler is fitted with an automatic air vent positioned on the pump (see Fig. 2). The vent is fitted with a non-sealing cap.
2. Open the central heating flow and return valves (spindle flats in-line with valve) (see Fig. 13).
3. Open the fill point valve on the filling loop until water is heard to flow.
4. To remove the air - Vent each radiator in turn, starting with the lowest in the system.
5. It is important that the pump is properly vented to avoid it running dry and damaging its bearings. Unscrew and remove the cap from the centre of the pump. Using a suitable screwdriver rotate the exposed spindle about half a turn, then replace the cap.
6. Check the operation of the heating pressure relief valve (see Fig. 2) by turning the head anti-clockwise until it clicks. The click is the valve lifting off its seat allowing water to escape from the system - check that this is actually happening.
7. Continue to fill the system until the pressure gauge indicates 1.0 bar. Close the fill point valve and check the system for water soundness, rectifying where necessary.
   Disconnect the filling loop from the mains supply.
   Water may be released from the system by manually venting a radiator until the system design pressure is obtained.
   The system design pressure (cold) should be between 0.75 and 1.25 bar.
   Refer to sections 3.7 and 3.8. System volume and Filling the system.
8. Open the mains water supply valve and allow the storage cylinder in the boiler to fill. Turn on all hot water taps and allow water to flow until no air is present. Turn off taps.

5.2 BOILER CONTROLS - Fig. 18

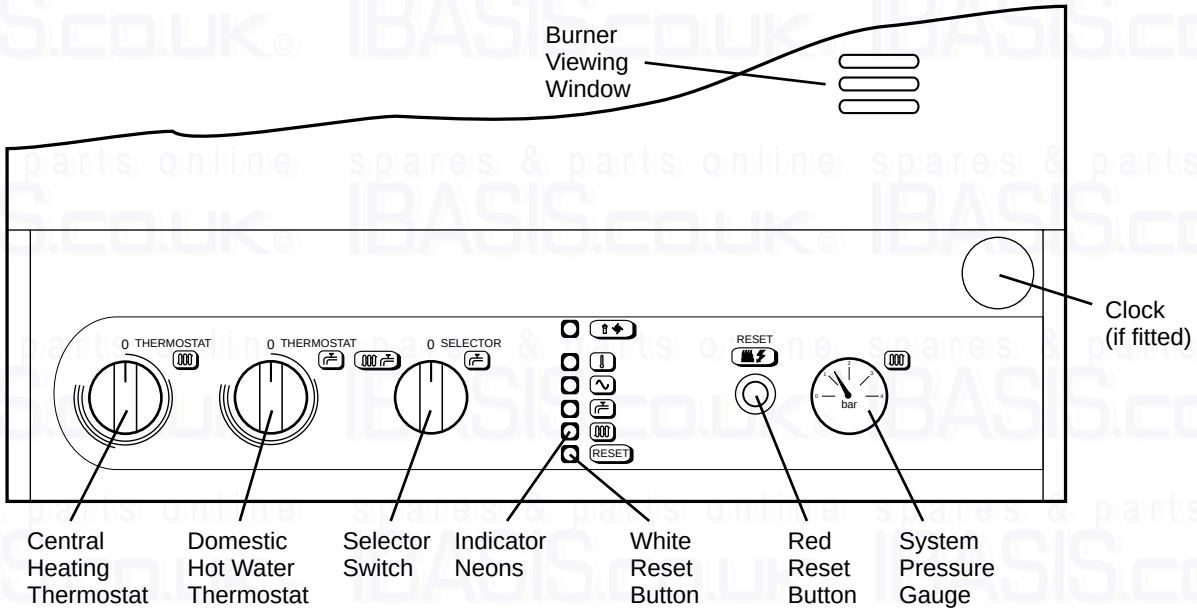

Fig. 18

5.3 TEST FOR GAS SOUNDNESS AND PURGE THE SUPPLY

1. With the boiler gas service cock closed (spindle flats at right angles to valve). Pressure test the gas supply and inlet pipework connection to the boiler gas service cock for soundness in accordance with BS 6891.
2. Loosen the gas inlet pressure test point screw on the gas valve (see Fig. 19). Ensure the gas supply is on and open the boiler service cock to purge in accordance with BS 6891.
3. Retighten the test point screw and test for gas soundness. Close the boiler gas service cock.

5.4 INITIAL LIGHTING - Refer to Fig. 18

Note: Remove the protective plastic coating from the boiler painted panels before lighting.

1. Ensure that the gas and electrical supplies to the boiler are off, the selector switch is set to '0' and the central heating flow and return valves are open.
2. Turn on the gas and electrical supplies to the boiler.
3. Ensure all external controls are calling for heat. If the optional Clock is fitted, refer to the User's instructions, set the time and ensure the Clock is in an 'on' mode.
4. Set the hot water and central heating temperature selectors to maximum.

5.5 CHECK THE BURNER PRESSURES - Fig. 19

Ensure the selector switch is set to 0, to turn off the boiler. Loosen the burner pressure test point screw on the gas valve and connect a pressure gauge.

Hot water mode

1. Set the selector switch to (DHW only) and the DHW thermostat to maximum, the electrical supply neon will illuminate.
2. The burner will light and the burner pressure will increase to maximum.
3. The burner will stay at maximum output for approximately 3 minutes and then the burner pressure will decrease slowly to its minimum, until the hot water store obtains a temperature of 65°C.
4. Check the burner pressures and that the burner goes out when the store is satisfied.
   The burner pressure settings have been factory set and do not require adjusting. If incorrect, check that the inlet gas pressure is 20 mbar. If the inlet gas pressure is not 20 mbar, either the pipework is too small or the gas supply to the house is insufficient, in which case contact British Gas.

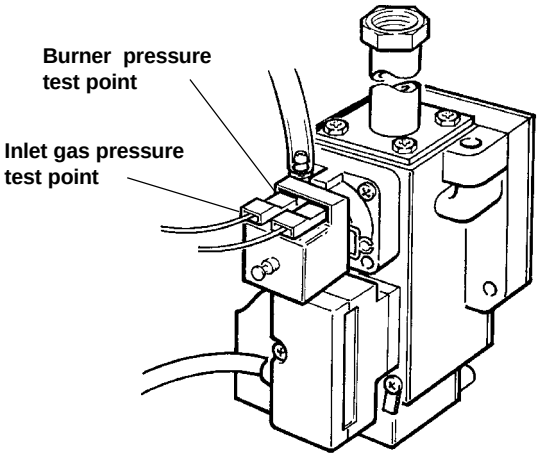

Fig. 19

Central heating mode

1. Set the selector switch to (DHW and CH) and turn the CH thermostat to maximum.
2. The burner will light at the factory pre-set maximum output.
3. Set the selector switch to 0 to turn off the boiler. Disconnect the pressure gauge and tighten the test point screw.

Test for gas soundness using suitable leak detection fluid.

Note: Refer to Technical Data, section 2.1 for burner pressure settings.

5.6 FINAL COMMISSIONING

1. Allow the heating system to heat up, then balance the system to achieve the necessary temperature difference across the heating flow and return pipes at the boiler and check the system volume and pressure. (Refer to Technical Data, section 2.8).
2. Set the selector switch to 0 to turn off the boiler.
3. Thoroughly flush out the water pipework and clean the filters in the heating return and pressure reducing valve on the unvented kit.
4. Re-pressurise the system as described in section 5.1.

5.7 FINAL ASSEMBLY

1. Raise the control panel and secure in position with the screws previously removed.
2. Place the front casing in position over the boiler ensuring the bottom is located behind the control panel and secure in position at the top using the screws previously removed.
3. If the boiler is to be left in service with the User, set the controls, clock (if fitted, see User's Operating manual) and room thermostat (if fitted) to the User's requirements.
4. If the boiler is not to be handed over immediately, close the boiler gas service cock and switch off the electrical supply.
5. If there is any possibility of the boiler being left during frost conditions, then the boiler and system should be drained. (Refer to Component Replacement, section 8.2).
   It is recommended that a label is attached to the boiler drawing attention to the fact that the system has been drained.
6. Complete the details of the installation on the back page of this manual.

5.8 USER INFORMATION

The User must be advised (and demonstrated if necessary) of the following important points:-

1. How to light and turn off the boiler and how to operate the system controls.
2. The importance of annual servicing of the boiler to ensure safe and efficient operation.
3. That any servicing or replacement of parts must only be carried out by CORGI registered personnel.
4. Ensure that the boiler controls and room thermostat (if fitted) are set to the User's requirements.
5. Tell the User about the sealed system pressure.
6. Tell the User that if the electrical supply neon ∿ is illuminated and the boiler has not operated for 24 hours for heating or hot water, the pump will automatically operate for 5 minutes.
7. Explain to the User that an internal frost thermostat is fitted in the boiler, and that electrical supply to the boiler must be left on (electrical supply neon ∿ illuminated) for the thermostat to operate.
8. Show the User the position of the pressure relief valve discharge pipes and tundish for the heating and DHW systems.
9. Hand the User's instructions and the Benchmark Log Book to the User.
10. Leave these Installation and Servicing instructions with the User for use on future calls.

6 BOILER OPERATION

The boiler operating mode is controlled by the selector switch on the facia panel. When set to , the boiler will only operate in the Domestic Hot Water mode. When set to , it will operate in the Domestic Hot Water and Central Heating mode.

Note: The clock (if fitted) only controls the operating times of the central heating, not domestic hot water - DHW is available continuously.

Domestic hot water supply always takes priority over central heating. If a demand for hot water is required during a central heating period, the boiler will automatically switch to the hot water mode until the demand is satisfied i.e. storage water is to the required temperature. This interruption in the central heating is only when the demand for hot water is present and should not be noticed by the User.

6.1 CENTRAL HEATING MODE

If there is a call for central heating the diverter valve is operated, the pump will start to circulate the primary heating water, operating the flow switch. The fan will run at full speed; once the air pressure switch is proved the burner will light. The burner output then automatically adjusts to suit the system demand; as the temperature of the heating water in the boiler approaches that set by the adjustable central heating thermostat the burner output is reduced. When this set temperature is reached, the burner is turned off and the fan stops. The pump continues to run for 3 minutes to remove residual heat build up in the boiler. The burner will not relight for 3 minutes; unless there is a demand for domestic hot water during this delay.

In this instance, the boiler will operate to satisfy the domestic hot water demand and the boiler will then immediately revert to provide central heating, if there is a demand.

6.2 DOMESTIC HOT WATER MODE

When there is a demand for hot water (temperature of stored hot water is below that set by the thermostat), the pump will start to circulate the primary heating water, operating the flow switch. The fan will run at full speed; once the air pressure switch is proved the burner will light. The burner output then automatically adjusts to suit the demand required to raise the temperature of the domestic hot water within the store to the temperature set by the adjustable domestic hot water thermostat. When this set temperature is reached the burner is turned off and the fan stops. The pump continues to run for 3 minutes to remove residual heat build up in the boiler.

When the hot water demand has been satisfied, the 3-way diverter valve operates to divert the primary heating water to the central heating, if there is a demand.

6.3 FROST THERMOSTAT

The boiler incorporates a built in frost thermostat which automatically turns on the boiler and pump if the water in the boiler falls below 5°C, providing the electrical supply neon ∿ is illuminated. The boiler will operate until the water temperature in the system reaches approximately 30°C.

6.4 PUMP

If the electrical supply neon ∿ is illuminated and the boiler has not operated for 24 hours for heating or hot water, the pump will operate automatically for five minutes every 24 hours.

6.5 INDICATOR NEONS

When illuminated, the following conditions apply:-

Warning light (continuously on) - blocked flue or fan fault, contact your Service Engineer.

Overheat thermostat has operated - press **white** reset button (see Fig. 18) to reset.

Electrical supply to the boiler is on.

Boiler is supplying hot water.

Boiler is supplying central heating.

When the red reset button ( ) is illuminated it indicates that the burner has failed to light - Press the **red** reset button (see Fig. 18) and the ignition sequence will restart.

7 ROUTINE SERVICING

To ensure efficient operation of the boiler it is recommended that it is checked and serviced as necessary at regular intervals. The frequency of servicing will depend upon the particular installation conditions and usage, but in general once per year should be adequate.

It is the law that any service work must be carried out by a competent person, i.e. CORGI registered personnel.

7.1 IMPORTANT NOTES PRIOR TO SERVICING

1. Check the flue terminal outside and ensure it is not blocked.
2. Run the boiler and check the operation of its controls.
3. Refer to Fig. 2 for location of flue sampling point.
4. Ensure that all system connections and fittings are sound. Remake any joints and check the tightness of any fittings that may be leaking.
5. It is recommended that the operation of the heating pressure relief valve is checked by turning the head anti-clockwise until it clicks. The click is the valve lifting off its seat allowing water to escape from the system - check that this is actually happening.
6. Refill, vent and re-pressurise the system as necessary. (Refer to Commissioning, section 5.1).
7. If the boiler is in a cupboard or compartment, ensure that the ventilation openings are adequate and are clear. (Refer to General Boiler Information, section 3.3).
8. Record details of the service in the Service History section on page 37 of this manual.
9. Inspect and clean, if required, the filter and cartridge in the pressure reducing valve and cartridge in the expansion relief valve fitted to the unvented kit.
10. Check the charge in the central heating and domestic hot water expansion vessels and re-pressurise, if necessary.

Warning: Before servicing the boiler, set the selector switch to 0, isolate the electrical supply and close the boiler gas service cock. Allow the boiler to cool.

The data label is positioned on the left hand case side panel and is visible after removing the front casing.

Always test for gas soundness after servicing any gas carrying components.

7.2 PREPARE FOR SERVICING - Fig. 20

1. Ensure the electrical supply is isolated and the gas supply is off.
2. Remove the two screws securing the top of the front casing. Lift the cover up slightly and remove.
3. Remove the four screws securing the room sealed chamber panel and remove the panel, taking care not to damage the seal.
4. Remove the two fixing screws (one each side) securing the control panel and hinge it forward.
5. Disconnect the electrode leads from the ignition electrodes.
6. Remove the four screws securing the combustion chamber front cover and remove the cover.
7. Disconnect the main burner's union and withdraw the burner out of the boiler. During removal of the burner, disconnect the flame sensing electrode lead and take care not to damage the side insulation panels.

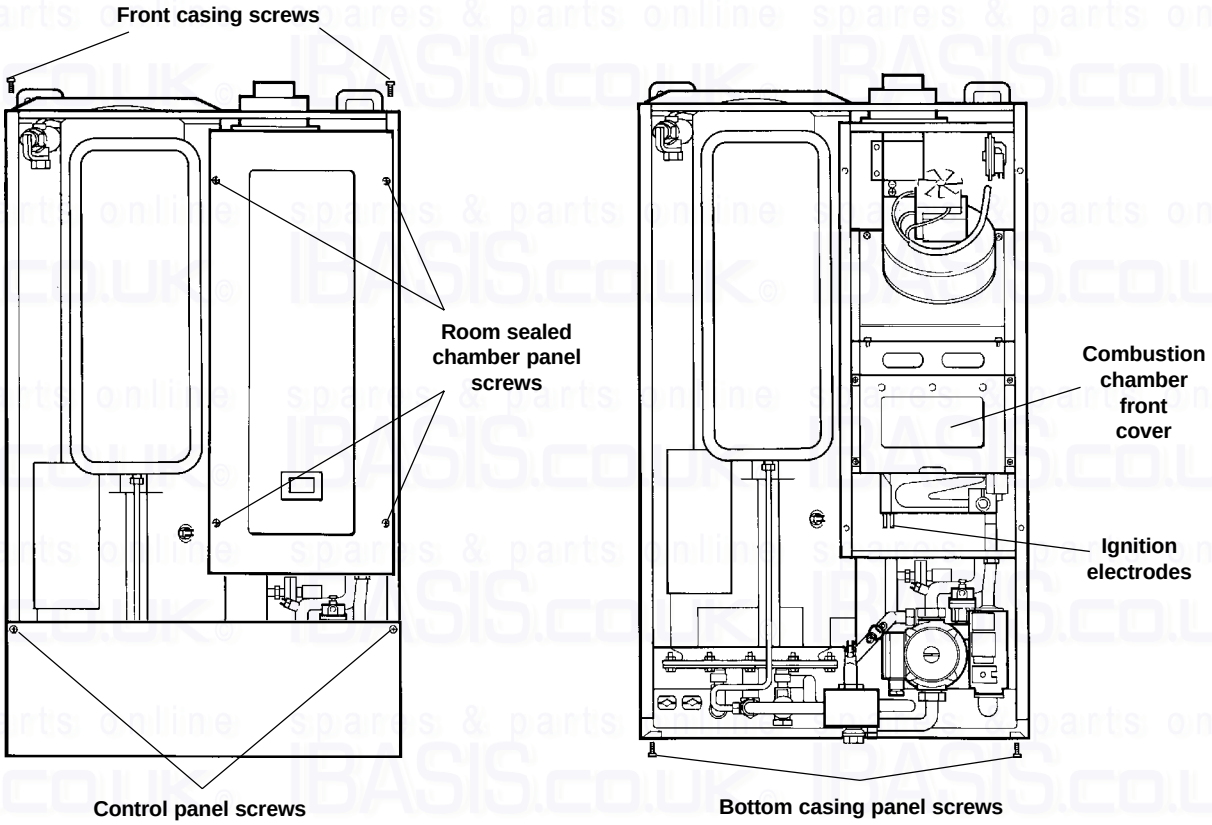

Fig. 20

7.3 CLEANING THE BOILER

1. Remove any deposits from heat exchanger using a suitable soft brush. Do not use a brush with metallic bristles.
2. Check the condition of the combustion chamber insulation panels. Any damaged panels must be replaced. (Refer to Component Replacement, section 8.23).
3. Check the condition of the burner injectors on the manifold, carefully clean them with a soft brush if necessary. Do not use a brush with metallic bristles as this might damage the injectors.
4. Remove any fallen deposits from the bottom of the inner case.
5. Unscrew and replace any injector that appears damaged.
6. Clean the top of the burner with a soft brush and check that the flame ports are clear. Blockages may be removed with a stiffer brush. Tap the burner, open end down, to remove any deposits from inside.
7. Check the condition of the electrodes.
9. Check the spark gap, positioning and height of the electrodes (see Figs. 21 and 22).
10. Check that the fan impeller is clean and free to rotate.

7.4 RE-ASSEMBLE THE BOILER

1. Replace the burner, ensuring it is located correctly onto the side panels and that the leads to the flame sensing and ignition electrodes are connected. Connect the main burner's union nut and tighten.
2. Replace the combustion chamber front cover, ensuring the bottom is correctly located in the burner.
3. Ensure the electrode leads are connected and the seals are in position in the bottom of the inner case.
4. Test the connections for gas soundness and check the burner pressures. (Refer to Commissioning, sections 5.4 and 5.5).
5. Ensure that the room sealed chamber panel seal is intact and in position, replace the panel and secure it in position with the screws previously removed.
6. Raise the control panel and secure in position with the screws previously removed.
7. Place the front casing in position over the boiler ensuring the bottom tags are located behind the control panel and secure in position at the top using the screws previously removed.
8. Check the operation of the boiler. (Refer to Boiler Operation, section 6).
9. Return all controls to their original settings.

8 COMPONENT REPLACEMENT

It is the law that any service work must be carried out by a competent person, i.e. CORGI registered personnel.

Warning: Before replacing any boiler components, set the selector switch to 0, isolate the electrical supply and close the boiler gas service cock. Allow the boiler to cool.

Always test for gas soundness after replacing any gas carrying components or disturbing any gas connections.

Check the operation of the boiler. (Refer to Boiler Operation, section 6). Ensure that all the controls are returned to their original settings.
The replacement of components in sections 8.3 to 8.21 does not require draining of the boiler.
The replacement of components incorporated within the unvented kit are detailed in sections 8.35 to 8.38.

8.1 GENERAL ACCESS - Fig. 20

Ensure the electrical supply is isolated and the gas supply is off.
Remove the two screws securing the top of the front casing. Lift the cover up slightly and remove.

1. **If access is required behind the control panel -** Remove the two fixing screws (one each side) securing the control panel and hinge it forward.
2. **To gain access to the combustion chamber -** Remove the four screws securing the room sealed chamber panel and remove the panel, taking care not to damage the seal. When replacing the panel, ensure the seal is intact and in position.
3. **To gain access to the control panel components -** Remove the five screws securing the rear cover and carefully raise the cover from the front. When replacing the cover, ensure no wires are trapped and all wiring grommets are in position. Secure with five screws - do not overtighten.
4. **If access is required from underneath the boiler -** Remove the two screws securing the bottom casing panel and, by pulling the panel forward, lift it from its location.

8.2 DRAINING THE BOILER - Refer to Fig. 13

Set the selector switch to 0, isolate the electrical supply and close the boiler gas service cock (see Fig. 13). Allow the boiler to cool. Remove the two screws securing the top of the front casing. Lift the cover up slightly and remove. Remove the two fixing screws (one each side) securing the control panel and hinge it forward.

1. **Heating circuit** (refer to Fig. 13)
   Close the central heating flow and return valves and drain the heating circuit via the drain point.
2. **Hot water circuit** (refer to Fig. 13)
   Close the mains water supply valve and drain the hot water storage cylinder via the drain tap at point I, Fig. 13 - Access to the drain tap is gained by removing the bottom casing panel (refer to section 8.1 paragraph 4). Open any hot tap below the level of the boiler to allow as much draining as possible.

Note: Some water will remain in the components and care must be taken when removing them.

8.3 ELECTRODES - Figs. 21, 22

Gain access as in section 8.1.

1. Remove the four screws securing the combustion chamber front cover and remove the cover.
2. Disconnect the leads from the ignition electrodes.
3. Disconnect the main burner's union and withdraw the burner out of the boiler. During removal of the burner, disconnect the flame sensing electrode lead and take care not to damage the side insulation panels.
4. **Flame sensing electrode - Fig. 21**
   Remove the screw securing the electrode and withdraw the electrode.
   Fit the new electrode, ensuring it is positioned correctly (see Fig. 21).
5. **Ignition electrodes - Fig. 22**
   Remove the screws securing the electrodes and withdraw the electrodes.
   Fit the new electrodes, ensuring they are positioned correctly and the spark gap is correct (see Fig. 22).

Re-assemble

1. Replace the burner, ensuring it is located correctly onto the side panels and that the leads to the flame sensing and ignition electrodes are connected. Connect the main burner's union nut and tighten.
2. Replace the combustion chamber front cover, ensuring the bottom is correctly located in the burner.
3. Complete re-assembly as described in Routine Servicing, section 7.4 paragraphs 3 to 9.

8.4 IGNITION ELECTRODE LEAD - Refer to Fig. 27

1. Gain access as in section 8.1.
2. Disconnect the lead from the electrodes.
3. Disconnect the lead from the ignition PCB, noting its position (see Fig. 27).
4. Fit the new lead ensuring it passes through the grommets in the control panel cover and base of the combustion chamber.
5. Re-assemble in reverse order.

8.5 MAIN BURNER

1. Remove the burner assembly as described in Routine Servicing, section 7.2.
2. Re-assemble with a new burner as described in Routine Servicing, section 7.4.

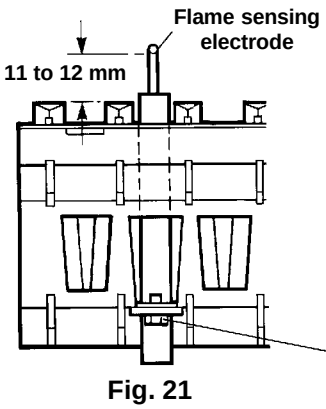

Fig. 21

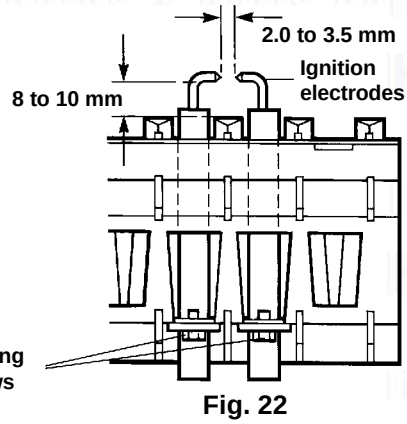

Fig. 22

8.6 BURNER INJECTORS

1. Remove the burner assembly as described in Routine Servicing, section 7.2.
2. Remove the two screws securing the burner to the injector manifold and remove the burner.
3. Unscrew the damaged injector and screw in a replacement.
4. Re-assemble as described in Routine Servicing, section 7.4.

8.7 FAN - Fig. 23

1. Gain access as in section 8.1.
2. Remove the four screws securing the combustion chamber front cover and remove the cover.
3. Disconnect the air pressure tubes from the fan outlet.
4. Loosen the fan to flue adaptor clamp screws and raise the clamp as far as possible.
5. Remove the two screws securing the fan to the flue hood and withdraw the assembly sufficiently to disconnect the fan wiring.
6. Remove the four screws securing the fan to the flue hood. Transfer the fan outlet casing to the new fan and re-assemble in reverse order.
   Note: Connect the fan wiring, blue to terminal 1 and brown to terminal 2. Ensure the pressure tubes are connected correctly, (red tube to +, clear tube to ─ marked on the fan outlet as shown in Fig. 23), and that the bottom of the combustion chamber cover is located correctly.
7. Re-assemble and test the boiler as described in Routine Servicing, section 7.4 paragraphs 5 to 9.

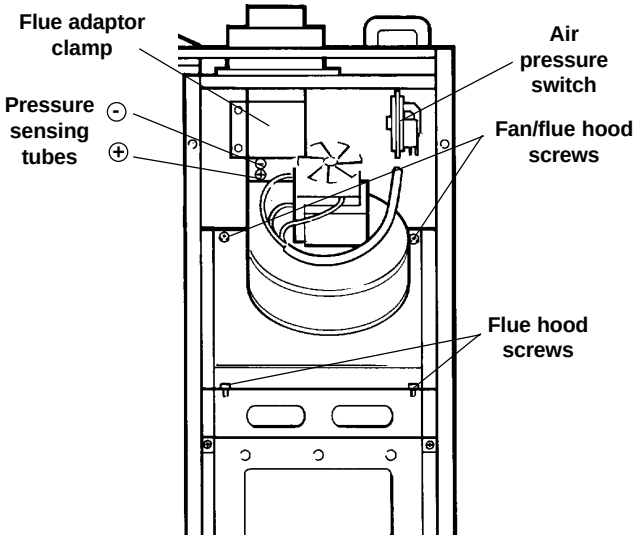

Fig. 23

8.8 AIR PRESSURE SWITCH - Fig. 24

1. Gain access as in section 8.1.
2. Disconnect the pressure sensing tubes.
3. Remove the two fixing screws and disconnect the wiring.
4. Connect the wiring to the new switch, black to C, brown to NC, blue to NO and reconnect the pressure tubes, (red tube to +, clear tube to ─, see Fig. 24).
5. Secure the new switch in position.
6. Re-assemble in reverse order.

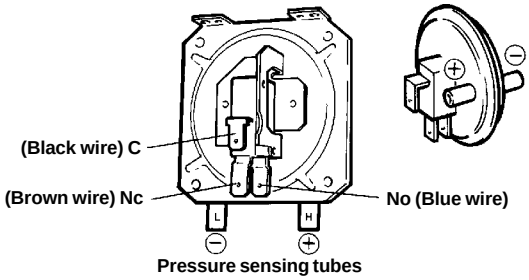

Fig. 24

8.9 OVERHEAT THERMOSTAT - Fig. 25

1. Gain access as in section 8.1.
2. Disconnect the wiring from the thermostat.
3. Remove the two fixing screws and remove the thermostat from the primary flow pipe.
4. Fit the new thermostat and re-assemble in reverse order.

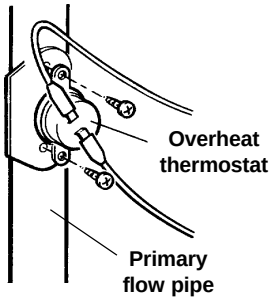

Fig. 25

8.10 GAS VALVE - Fig. 26

1. Gain access as in section 8.1.
2. Remove the two screws securing the bottom panel and lift out the panel.
3. Disconnect the coil wires and pressure tube from the gas valve.
4. Loosen the screw (see Fig. 26) securing the solenoid plug and disconnect the plug.
5. Remove the four manifold screws from beneath the boiler.
6. Disconnect the burner manifold union within the room sealed chamber and remove the four screws securing the manifold to the gas valve.
7. Remove the burner manifold and fit it to the new valve using the new 'O' ring seal supplied.
8. Fit the new assembly, using new 'O' ring seals supplied.
9. Re-assemble in reverse order.
10. Light the boiler and test for gas soundness. (Refer to Commissioning, section 5.4).
11. Complete re-assembly as described in Routine Servicing, section 7.4 paragraphs 5 to 9.

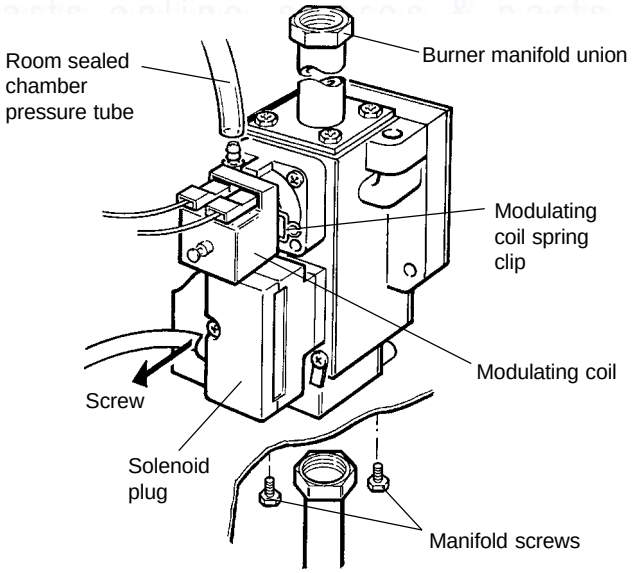

Fig. 26

8.11 GAS VALVE MODULATING COIL - Fig. 26

1. Gain access as in section 8.1.
2. Disconnect the wires from the coil and remove the spring clip.
3. Lift off the coil and re-assemble in reverse order with a new coil. The polarity of the wires is not important.

8.12 BURNER VIEWING WINDOW

1. Gain access as in section 8.1.
2. Remove the two screws securing the window frame and remove the damaged glass and gasket.
3. Re-assemble in reverse order with a new glass and gasket. Ensure the gasket is next to the inner case front panel.

8.13 INTERNAL FUSE - Refer to Fig. 16

The fuse is located in the boiler terminal block.

1. Gain access as described in Installation, section 4.9.
2. Lift out the fuse holder and remove the fuse. Fit a fast blow 2 A fuse as a replacement, ensuring that the holder snaps into position.
3. Re-assemble in reverse order, ensuring the terminal block is located correctly on the plastic pin.

8.14 IGNITION PCB - Refer to Fig. 27

1. Gain access as described in section 8.1.
2. Disconnect the wiring connectors, then remove the three fixing screws.
3. Connect the wiring to the new PCB and re-assemble in reverse order.

8.15 NEON PCB - Fig. 27

1. Gain access as described in section 8.1.
2. Remove three screws securing ignition PCB.
3. Remove one screw securing neon PCB and disconnect the wiring connectors from the main PCB.
4. Re-assemble in reverse order.

8.16 RELAY PCB - Fig. 27

1. Gain access as described in section 8.1.
2. Disconnect the wiring connector from the PCB.
3. Remove the fixing screw and remove the board.
4. Re-assemble in reverse order.

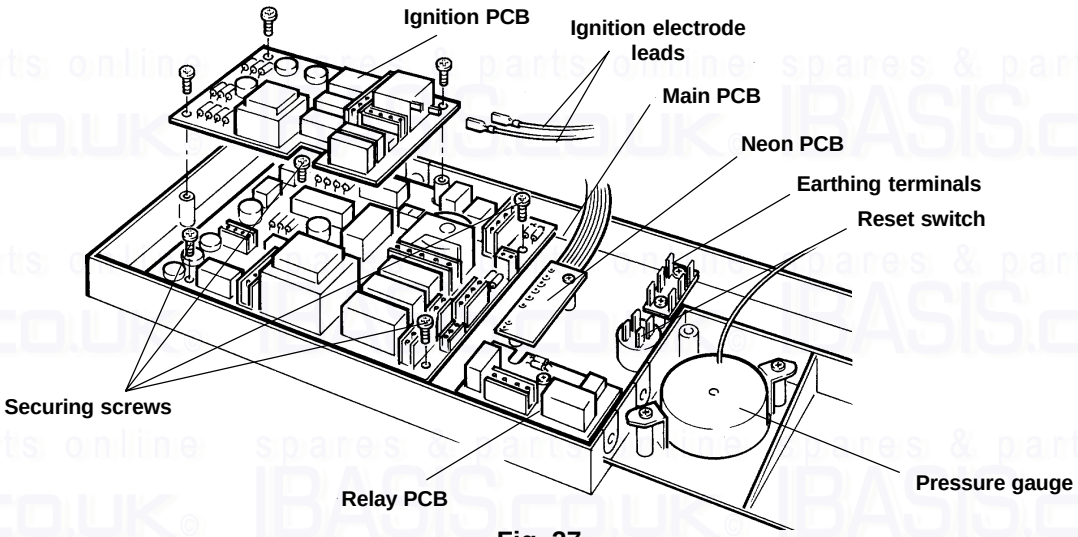

Fig. 27

8.17 RESET SWITCH - Fig. 27

1. Gain access as described in section 8.1.
2. Disconnect the wiring from the switch.
3. Remove the five screws securing the complete control box to the control panel.
4. Depress the switch retaining lugs and withdraw the switch from the front of the control box.
5. Re-assemble in reverse order, ensuring that the wiring is connected as follows:-
   White to terminals 1 and 3, Black to terminals 2 and 4.

8.18 MAIN PCB - Fig. 27

1. Gain access as described in section 8.1.
2. Remove the ignition PCB as described in section 8.14.
3. Disconnect all the wiring connectors from the PCB.
4. Remove the three fixing screws and carefully withdraw the board from the spindles of the control knobs.
5. Re-assemble in reverse order. Refer to the Wiring Diagram on page 30 for connections.

8.19 SUPPRESSOR - Fig. 28

1. Gain access as described in section 8.1.
2. Withdraw the suppressor from the control panel cover.
3. Disconnect the wiring and re-assemble with a new suppressor. Connect the wiring as follows:-
   Mains Brown to L2, Mains Blue to N4, Brown to U1, Blue to 3U, Green/Yellow to ⏚.

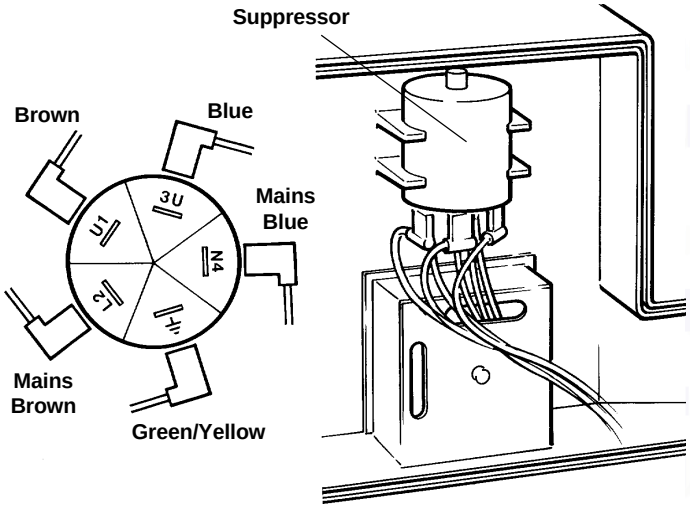

Fig. 28

8.20 DIVERTER VALVE MOTOR - Refer to Fig. 30

1. Gain access as described in section 8.1.
2. Release the screw securing the motor cover.
3. Release the two screws securing the motor assembly to the valve body and remove the motor assembly.
4. Disconnect the motor's wiring from the wiring harness and remove the motor.
5. Re-assemble in reverse order.

8.21 CLOCK (if fitted) - Refer to Fig. 17

1. Gain access as described in section 8.1.
2. Disconnect the wiring from the clock.
3. Remove the clock retaining screws and withdraw the clock from the control panel.
4. Fit the new clock, and connect the wires as follows:-
   Blue to terminal 1, Brown to terminal 2 and Black wires to terminals 3 and 4, (or as per the instructions supplied with the clock).
5. Re-assemble in reverse order. Refer to the User's instructions and the boiler's control cover to set the clock.

8.22 MAIN HEAT EXCHANGER - Refer to Fig. 23

1. Drain the boiler heating circuit as described in section 8.2.
2. Remove the four screws securing the combustion chamber front cover and remove the cover.
3. Remove the fan assembly as described in section 8.7.
4. Remove the two screws securing the flue hood and lift out the flue hood.
5. Remove the two screws securing the heat exchanger and remove by pulling it towards the front, being careful not to damage the combustion chamber insulation.
6. Fit a new heat exchanger, using new 'O' rings. Lubricating the 'O' rings with a soap solution will aid assembly. Ensure the heat exchanger is correctly located between the combustion chamber insulation sides.
7. Replace the two screws securing the heat exchanger.
8. Re-assemble in reverse order.
   Note: Connect the fan wiring, blue to terminal 1 and brown to terminal 2. Ensure the pressure tubes are connected correctly - refer to Fig. 23.
9. Refill and pressurise the system. (Refer to Commissioning, section 5.1).

8.23 COMBUSTION CHAMBER INSULATION

1. Gain access as described in section 8.1.
2. Remove the four screws securing the combustion chamber front cover and remove the cover.
3. Slide out the insulation front panel from the front cover.
4. To replace the rear and side panels, remove the heat exchanger as described in section 8.22 and slide out the insulation panels.
5. Fit a new panel and re-assemble in reverse order.
   Note: Connect the fan wiring, blue to terminal 1 and brown to terminal 2. Ensure the pressure tubes are connected correctly - refer to Fig. 23.
6. Refill and pressurise the system. (Refer to Commissioning, section 5.1).

8.24 PRESSURE GAUGE

1. Gain access as described in section 8.1.
2. Drain the boiler heating circuit as described in section 8.2.
3. Remove the nut securing the pressure gauge sensor to the return/filter housing and withdraw the sensor.
4. Remove two screws securing the gauge to the control panel and withdraw.
5. Fit the new gauge using a new washer on the diverter valve connection if necessary.
6. Refill and pressurise the system. (Refer to Commissioning, section 5.1).

8.25 TEMPERATURE SENSORS - Fig. 29

The temperature sensors fitted to the hot water storage, primary return and primary flow are all the same. Refer to Fig. 2 for their location.

1. Gain access as described in section 8.1.
2. Disconnect the wiring and unscrew the sensor. Re-assemble in reverse order with a new sensor.

8.26 AUTOMATIC AIR VENT - Fig. 29

1. Drain the boiler heating circuit as described in section 8.2.
2. Unscrew the automatic air vent from the pump outlet. Fit a new one using a new 'O' ring.
3. Refill and pressurise the system. (Refer to Commissioning, section 5.1).

8.27 PUMP - Fig. 29

Drain the boiler heating circuit as described in section 8.2.

Pump Head

1. Remove the four socket head screws securing the pump head to the body. Withdraw the head, remove the wiring cover and disconnect the wiring.
2. Connect the wiring to the new head as follows:-
   Brown to L, Blue to N, Green/yellow to ⏚.
   Ensure the pump is set to maximum (3) and re-assemble in reverse order.
3. Refill and pressurise the system. (Refer to Commissioning, section 5.1).

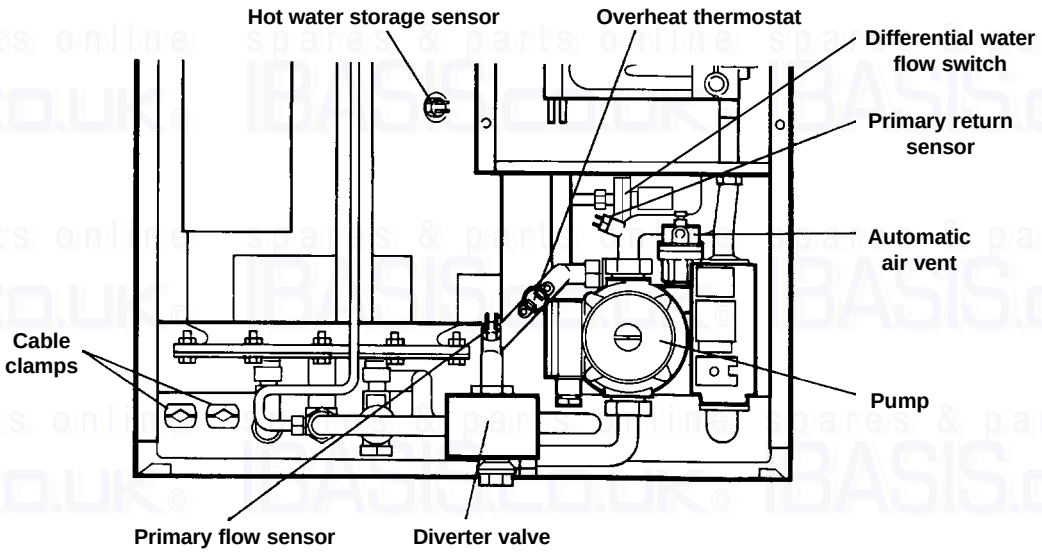

Fig. 29

Complete pump

1. Unscrew the automatic air vent from the pump outlet.
2. Disconnect the pump unions and withdraw the pump, remove the wiring cover and disconnect the wiring.
3. Connect the wiring as described above, ensure that pump is set to maximum and re-assemble using new sealing washers.
4. Refill and pressurise the system. (Refer to Commissioning, section 5.1).

8.28 DIVERTER VALVE ASSEMBLY - Fig. 30

1. Drain the boiler heating circuit as described in section 8.2.
2. Remove the bottom casing panel as described in section 8.1, paragraph 4.
3. Remove the diverter valve motor as described in section 8.20.
4. Release the pipework retaining plate screws and rotate the plates to allow the pipe connections to be withdrawn.
5. Withdraw the pipes from the valve and remove the diverter valve body.
6. Re-assemble in reverse order using the new seals supplied.
7. Refill and pressurise the system. (Refer to Commissioning, section 5.1).

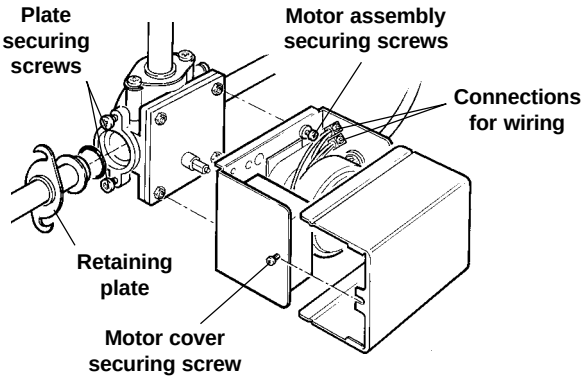

Fig. 30

8.29 HEATING RETURN FILTER - Refer to Fig. 13

1. Drain the boiler heating circuit as described in section 8.2.
2. Unscrew the heating return filter end cap fitting and withdraw the filter.
3. Clean or replace and re-assemble in reverse order.

8.30 HEATING PRESSURE RELIEF VALVE - Refer to Fig. 2

1. Drain the boiler heating circuit as described in section 8.2.
2. Disconnect the union connecting the valve to the primary flow pipe.
3. Re-assemble in reverse order using the new washers supplied.
4. Refill and pressurise the system. (Refer to Commissioning, section 5.1).

8.31 HEATING EXPANSION VESSEL - Refer to Fig. 2

1. Drain the boiler heating circuit as described in section 8.2.
2. Disconnect the pipe from the expansion vessel.
3. Remove the nut and washers securing the vessel to the hot water storage cylinder and lift the vessel out of the boiler.
4. Re-assemble in reverse order using the new seal supplied.
5. Refill and pressurise the system. (Refer to Commissioning, section 5.1).

8.32 DIFFERENTIAL WATER FLOW SWITCH - Refer to Fig. 29

1. Drain the boiler heating circuit as described in section 8.2.
2. Disconnect the flow switch unions and remove the switch.
3. Remove the screws securing the plastic cover and disconnect the wiring from the microswitch.
4. Re-assemble in reverse order using the new seals supplied.
5. Refill and pressurise the system. (Refer to Commissioning, section 5.1).

8.33 DHW TEMPERATURE/PRESSURE RELIEF VALVE - Refer to Fig. 2

1. Partially drain the hot water circuit, as described in section 8.2, so that the water in the hot water storage cylinder is below the relief valve connection.
2. Remove the valve from the storage cylinder.
3. Re-assemble in reverse order.
4. Refill the storage cylinder by opening the mains water supply valve and opening a hot water tap.

8.34 DHW STORAGE CYLINDER

1. Drain the boiler heating and hot water circuits as described in section 8.2.
2. Remove the heating expansion vessel as described in section 8.31.
3. Remove the DHW temperature/pressure relief valve as described in section 8.33.
4. Remove the storage temperature sensor as described in section 8.25.
5. Release the strapping securing the insulation to the cylinder and remove the two screws (on the left hand side) securing the top front support bar.
6. Remove the front section of the cylinder insulation.
7. Disconnect all the pipework from the cylinder.
8. Remove the cylinder retaining screw, positioned beneath the cylinder on the backplate.
9. Lift the cylinder upwards to disengage it from the top of the boiler's backplate. Pull the cylinder forward and out of the boiler.
10. Re-assemble in reverse order using the new seals supplied.
11. Refill and pressurise the heating and hot water circuits. (Refer to Commissioning, section 5.1).

8.35 DHW EXPANSION VESSEL - Refer to Fig. 12

1. Close the mains water supply valve and ensure that all hot water taps are closed. Release the pressure from the hot water circuit.
2. Disconnect the expansion vessel union. Release the clamping band securing it to the mounting bracket.
3. Remove the expansion vessel.
4. Re-assemble in reverse order. Refill and pressurise the hot water circuit by opening the mains water supply valve.

8.36 PRESSURE REDUCING VALVE FILTER/CARTRIDGE - Refer to Fig. 12

1. Close the mains water supply valve and ensure that all hot water taps are closed. Release the pressure from the hot water circuit.
2. Unscrew the cartridge from the valve body.
3. Clean or replace the filter/cartridge and re-assemble in reverse order.
4. Refill and pressurise the hot water circuit by opening the mains water supply valve.

8.37 EXPANSION RELIEF VALVE CHECK VALVE - Refer to Fig. 12

1. Close the mains water supply valve and ensure that all hot water taps are closed. Release the pressure from the hot water circuit.
2. Disconnect the valve pipework unions and remove the valve
3. Re-assemble in reverse order. Refill and pressurise the hot water circuit by opening the mains water supply valve.

8.38 EXPANSION RELIEF VALVE CARTRIDGE - Refer to Fig. 12

1. Close the mains water supply valve and ensure that all hot water taps are closed. Release the pressure from the hot water circuit.
2. Unscrew the cartridge from the valve body.
3. Clean or replace the cartridge and re-assemble in reverse order.
4. Refill and pressurise the hot water circuit by opening the mains water supply valve.

9 WIRING DIAGRAMS

9.1 ILLUSTRATED WIRING DIAGRAM

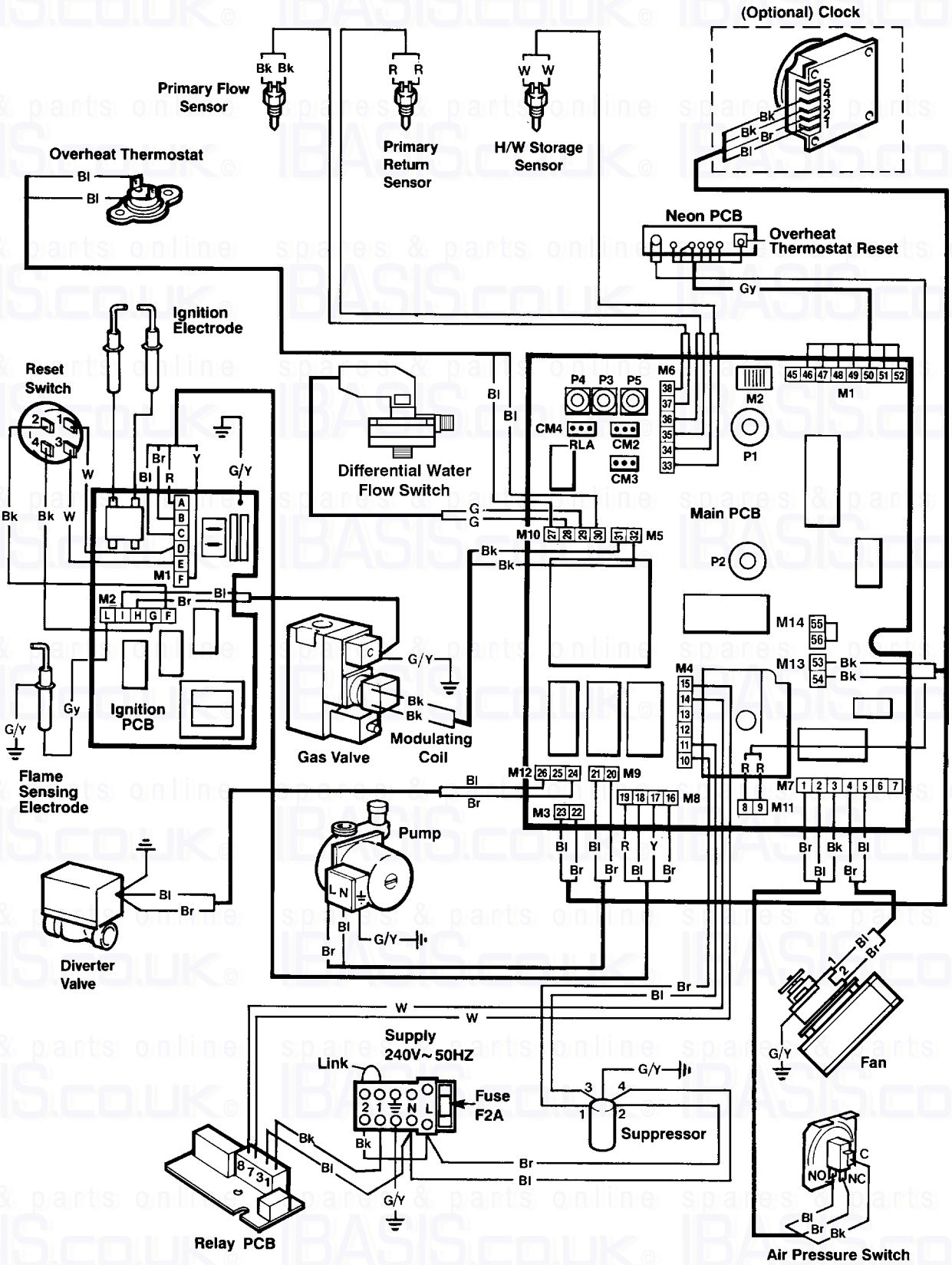

NOTES:

1) REMOVE LINK FROM TERMINALS 1 & 2 TO CONNECT EXTERNAL CONTROL (240V SWITCHING)
2) A FROST THERMOSTAT IS INCORPORATED WITHIN MAIN PCB
3) LINK BETWEEN TERMINALS 55 & 56 MUST BE CONNECTED

Br	- Brown	G	- Green
Bk	- Black	G/Y	- Green/Yellow
Bl	- Blue	W	- White
R	- Red	Gy	- Grey
Y	- Yellow		

9.2 FUNCTIONAL FLOW WIRING DIAGRAM

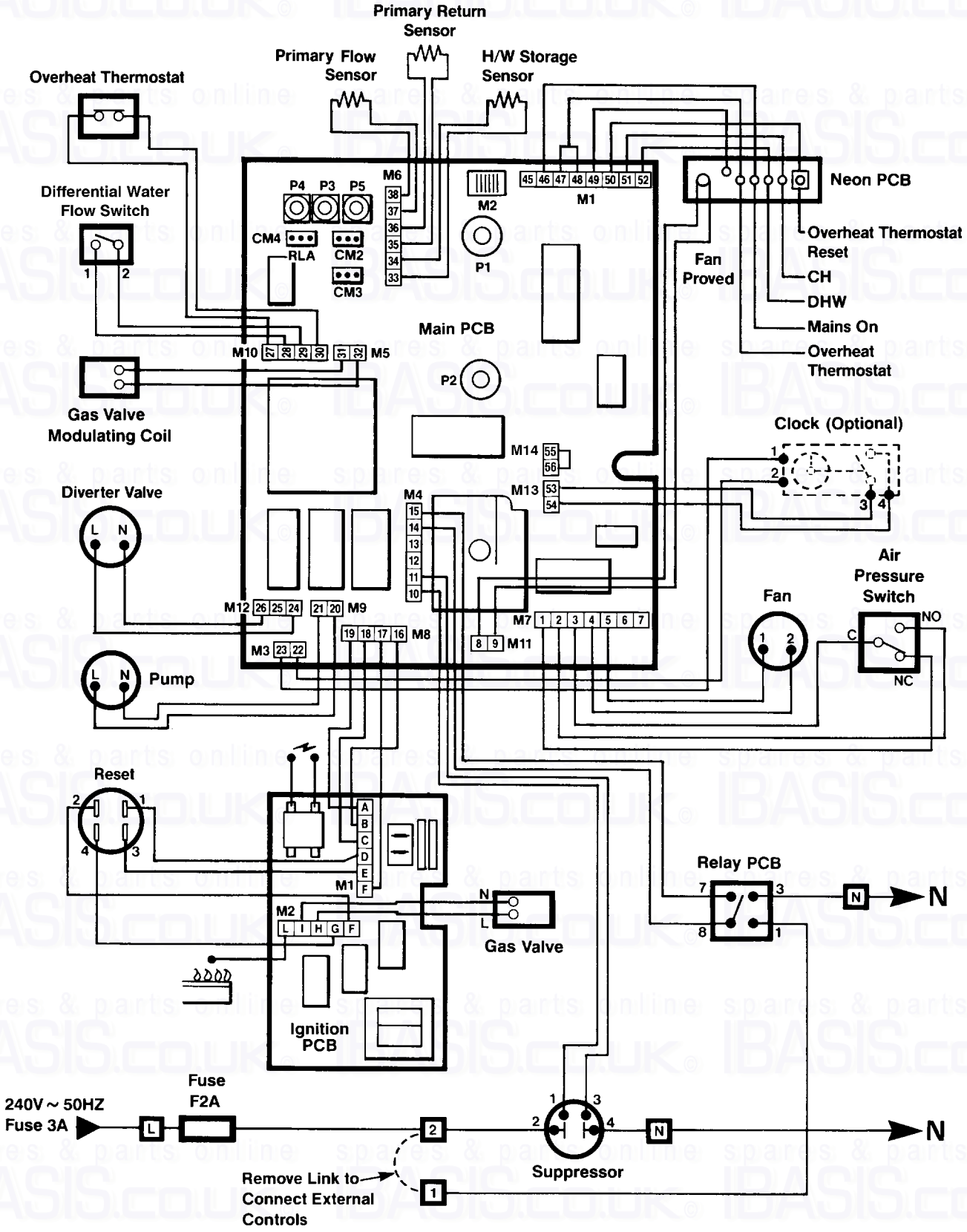

NOTES:

1) ■ DENOTES MAIN TERMINAL BLOCK
2) A FROST THERMOSTAT IS INCORPORATED WITHIN MAIN PCB
3) LINK BETWEEN TERMINALS 55 & 56 MUST BE CONNECTED

10 FAULT FINDING

10.1 CARRY OUT INITIAL FAULT FINDING CHECKS

1. Check that gas, water and electrical supplies are available at the boiler.
   i.e. Inlet gas pressure = 20 mbar, Electrical supply = 230/240 V ~ 50 Hz, CH water system pressurised to 1 - 1.5 bar
2. Carry out electrical system checks, i.e. Earth Continuity, Resistance to Earth, Short Circuit and Polarity with a suitable meter.
   Note: These checks must be repeated after any servicing or fault finding.
3. Ensure all external controls are calling for heat and check all external and internal fuses.

Before any servicing or replacement of parts ensure the gas and electrical supplies are isolated.

10.2 CENTRAL HEATING - Follow operational sequence

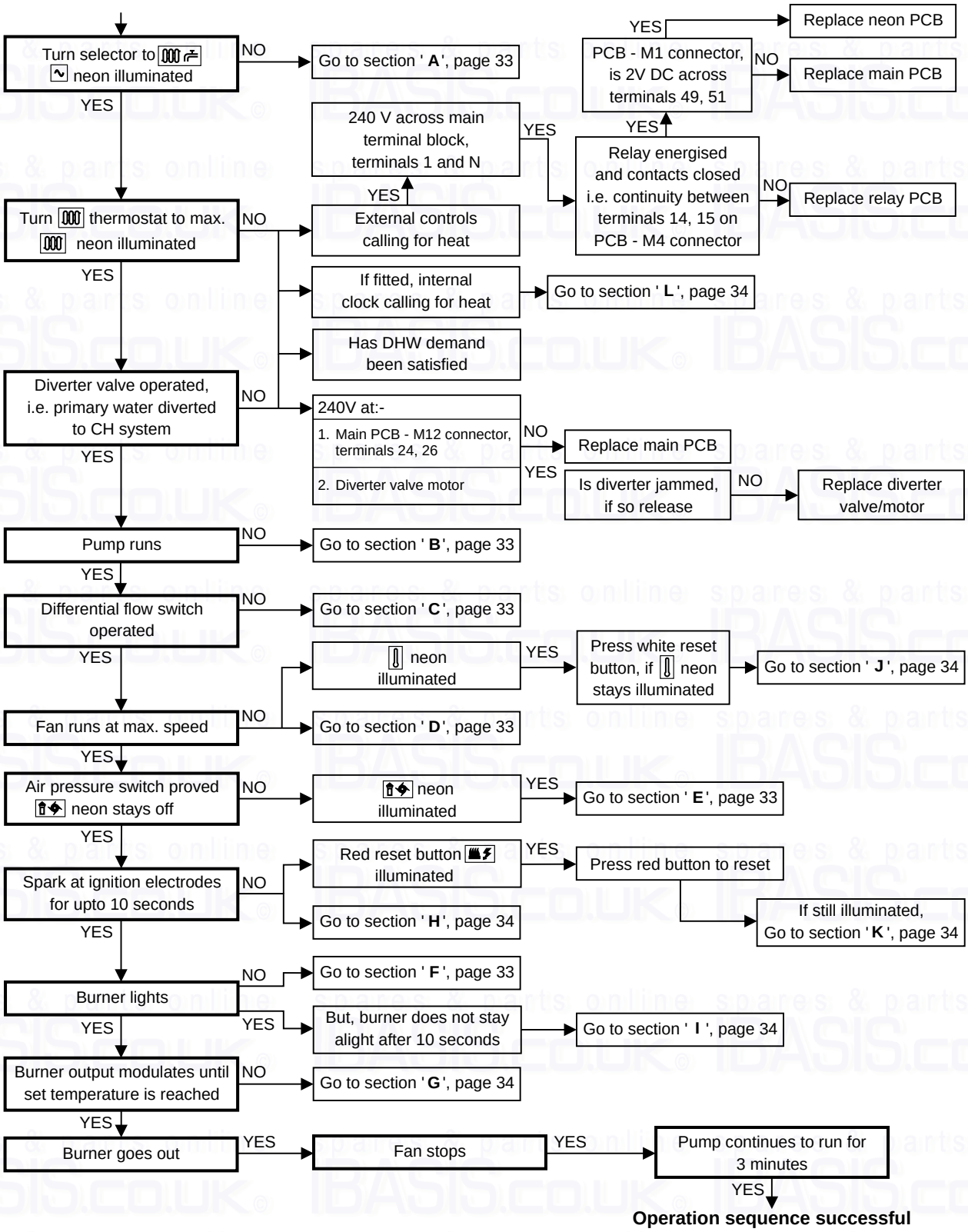

10.3 DOMESTIC HOT WATER - Follow operational sequence (DHW storage at ambient temperature i.e. cold)

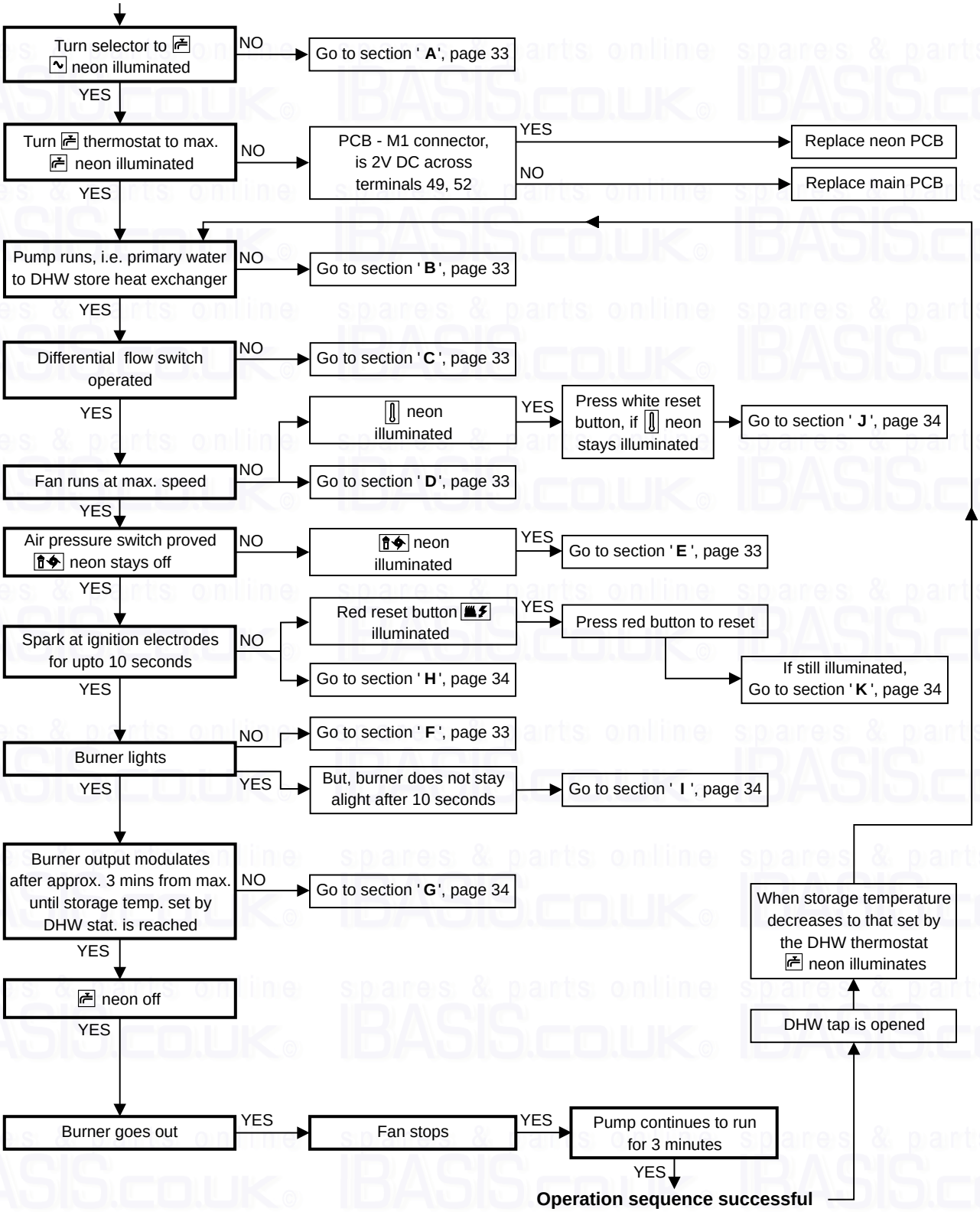

10.4 FAULT FINDING SOLUTION SECTIONS A to L

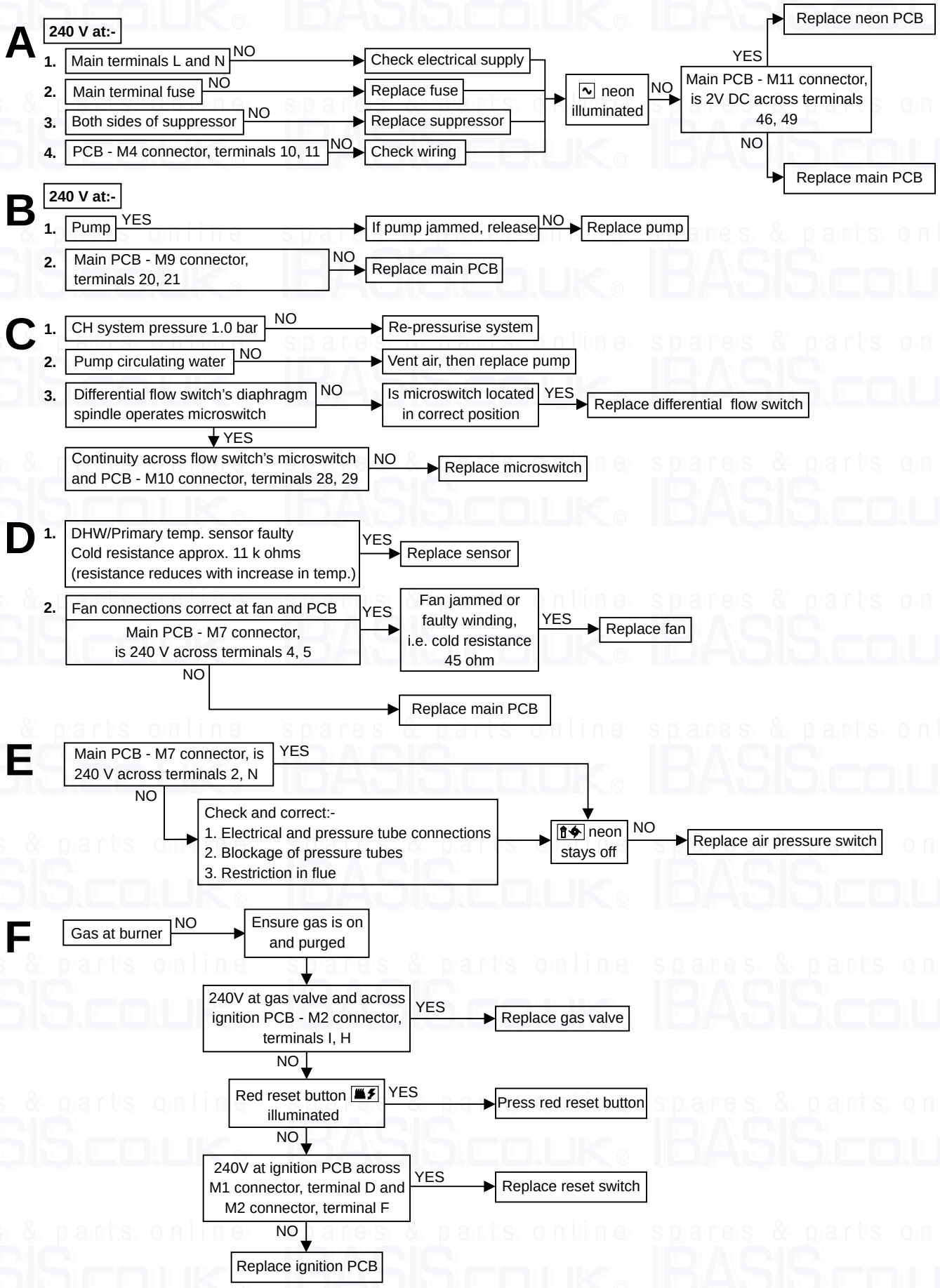

spares & parts online IBASIS.CO.UK

G

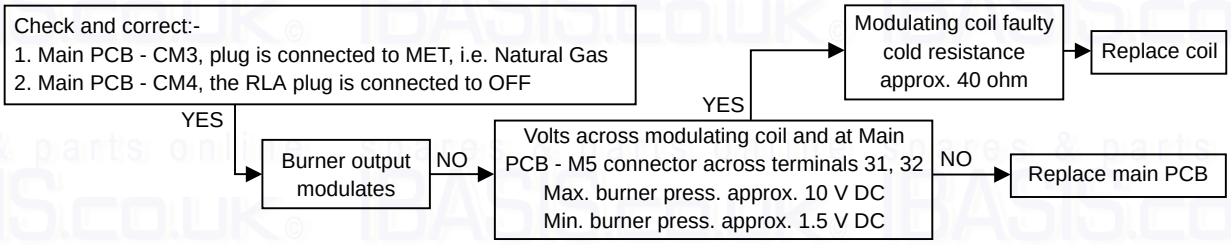

H

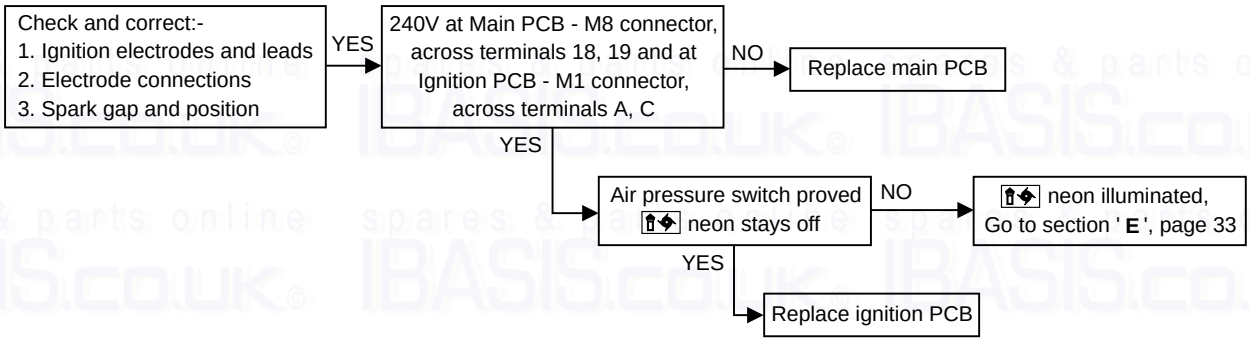

I

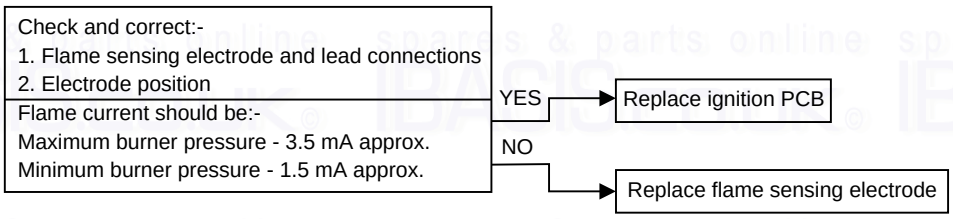

J

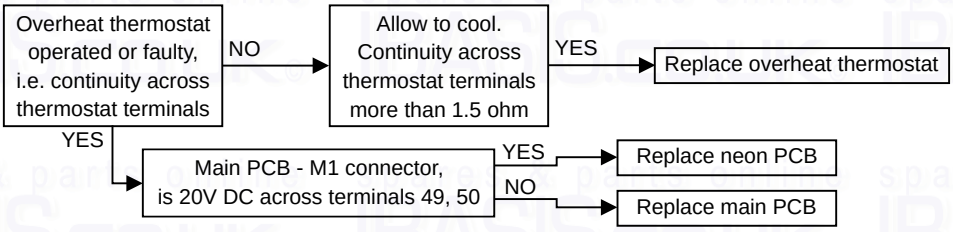

K

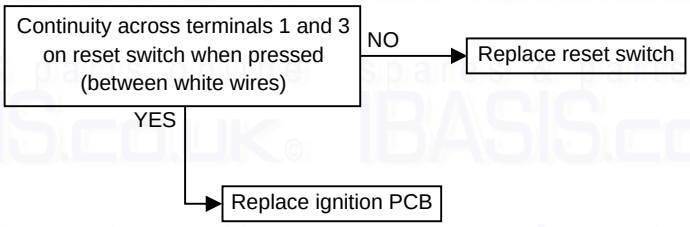

L

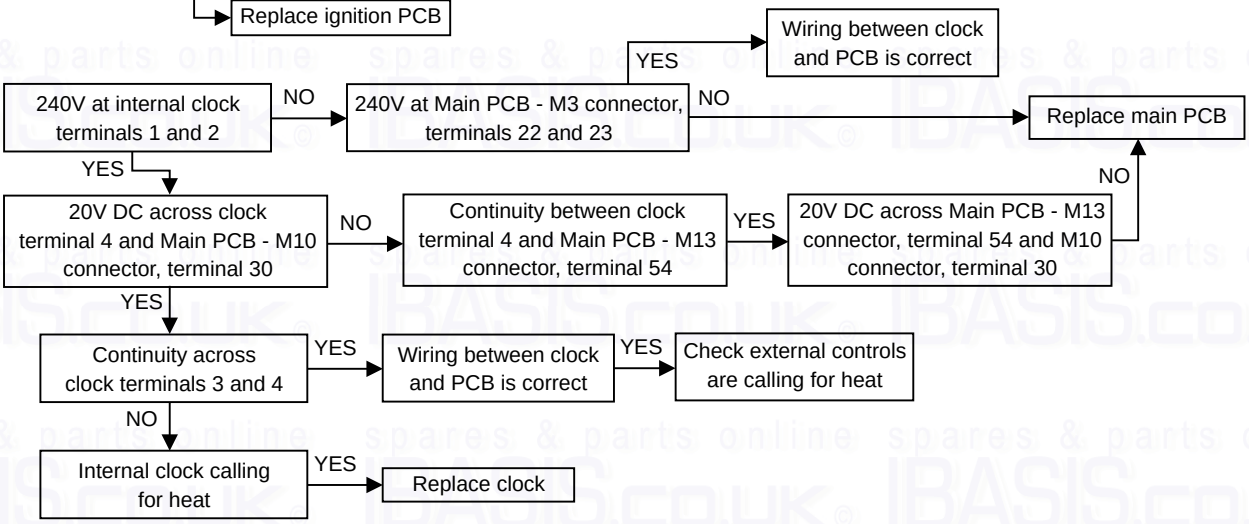

11 SHORT PARTS LIST

Reference	Description	Qty.	Alpha Pt. No.	British Gas GC No.
Fig. 2, item 15	Burner assembly and seal	1	5630310A	343 750
-	Main injector 1.18 mm	18	5202820	385 830
Fig. 2, item 16	Primary heat exchanger and seals	1	5622181A	343 751
Fig. 2, item 21	DHW storage cylinder and seals	1	5632750A	343 752
Fig. 2, item 3	Gas valve - Honeywell VK4105A1027	1	5644680	E02 286
Fig. 26	Gas valve modulating coil	1	8440130	343 560
Fig. 2, item 5	Pump - Grundfos UPS 15/60 AO and seals	1	5628910A	343 562
Fig. 2, item 5	Pump head replacement - UPS 15/60 and seals	1	5610131A	343 563
Fig. 2, item 17	Fan assembly - SEL type RL108/4200 A55	1	5632530	378 864
Fig. 2, item 18	Air pressure switch - Honeywell C6065F1100	1	5629560	393 947
Fig. 2, item 7	Differential water flow switch and seals	1	5641850	
Fig. 30	Diverter valve - Honeywell V4044C1593 and seals	1	5634030A	343 754
Fig. 12	DHW expansion vessel - 5 litre	1	0001015	173 046
Fig. 2, item 22	Pressure/temperature relief valve - 90°C/7 bar	1	5635140	173 048
Fig. 12	Pressure reducing valve - 3.5 bar	1	0001016	173 047
Fig. 12	Expansion relief valve - 6 bar	1	0001020	343 759
Fig. 27	Main PCB	1	5634680	343 755
Fig. 27	Neon PCB	1	5632420	343 756
Fig. 2, item 6, 11, 23	Temperature sensor	3	8433090	343 571
Fig. 27	Ignition PCB	1	5642300	343 729
Fig. 28	Suppressor - Procond 411.10.5060	1	8450200	379 764
Fig. 16	Fuse F2A	1	8421410	343 572
Fig. 25	Overheat thermostat - TOD 36TE21	1	8432560	379 798
Fig. 27	Reset switch - Cometti SPL60	1	8433330	173 049
Fig. 22	Electrode - Ignition Front	1	8422000	343 724
Fig. 22	Electrode - Ignition Rear	1	8422010	343 725
Fig. 21	Electrode - Flame sensing	1	8421970	343 726
Fig. 27	Electrode lead - Ignition	1	8416730	343 727
Fig. 2, item 20	Expansion vessel - 7.5 Litre	1	5629130	173 050
Fig. 2, item 13	CH pressure relief valve - 3 bar	1	5619620	397 677
-	Insulation panel set (combustion chamber)	1	5635480	343 757
Fig. 29	Automatic air vent and seals	1	5625830A	343 578
Fig. 27	Relay PCB	1	5631550	343 718
Fig. 2, item 4	Pressure gauge	1	8922220	385 839

12 SERVICE HISTORY

DETAILS OF BOILER INSTALLATION

Date of Installation: .....

Name of Installer: .....

Address: .....

.....

.....

.....

Postcode: .....

Telephone No: .....

Boiler Serial Number: .....
(see data label on inside of left hand case panel)

DETAILS OF BOILER SERVICE HISTORY

Date of Service	Details of Service	Service Engineer
.....	.....	.....
	.....	
	.....	
	.....	
.....	.....	.....
	.....	
	.....	
	.....	
.....	.....	.....
	.....	
	.....	
	.....	
.....	.....	.....
	.....	
	.....	
	.....	

Alpha BOILERS

Alpha Therm Limited.
Goldsel Road, Swanley, Kent BR8 8EX
Tel: (01322) 669443
Fax: (01322) 615017

These instructions have been carefully prepared but we reserve the right to alter the specification at any time in the interest of product improvement.
© Alpha Therm Limited 1999.

Part No. 920.308.1

Manual compiled and designed by Publications 2000, Tel (01670) 356211

11/99/D100