Installation and Servicing Instructions

Alpha CB24/28

Range of Wall Mounted, Fan Assisted, Room Sealed, Gas Fired Combination Boilers

For Technical help or for Service call ...

ALPHA HELPLINE

Tel: (01322) 669443

Alpha BOILERS

Goldsel Road,
Swanley, Kent BR8 8EX
Fax: (01322) 615017

British Gas
Service Listed

CE 0063

Alpha CB24X	G.C. No. 47 532 14
Alpha CB24	G.C. No. 47 532 15
Alpha CB28	G.C. No. 47 532 16
Alpha CB28X	G.C. No. 47 532 17

WRAS APPROVED PRODUCT

benchmark™

For use with Natural Gas only

Leave these instructions with the User

CONTENTS

1 Introduction 2
2 Technical data 3
3 General boiler information 6
4 Installation 10
5 Commissioning 15
6 Boiler operation 17
7 Routine servicing 18
8 Component replacement 20
9 Wiring diagrams 27
10 Fault finding 29
11 Short parts list 33
12 Service history 34

1 INTRODUCTION

The Alpha CB range of boilers are wall mounted, fan assisted room-sealed combination boilers. The burner is lit electronically and the heat output is controlled by a modulating gas valve.

The boilers, providing both central heating and domestic hot water at mains pressure, are designed for use with a fully pumped, sealed and pressurised heating system using **only Natural Gas**.

The boilers are supplied with a pump, diverter valve, pressure relief valve, expansion vessel and pressure gauge fully assembled and tested.

As supplied, the Alpha CB24 boilers will automatically modulate to provide central heating outputs between 9.3 and 23.3 kW (31 700 and 79 500 Btu/h). The Alpha CB28 boilers will provide central heating outputs between 11.2 and 28.0 kW (38 200 and 95 500 Btu/h).

The maximum output available for domestic hot water is 23.3 kW (79 500 Btu/h), capable of providing 9.5 litres/min with a temperature rise of 35°C for the Alpha CB24 boilers, and 28.0 kW (95 500 Btu/h), capable of providing 11.4 litres/min with a temperature rise of 35°C for the Alpha CB28 boilers.

IMPORTANT

It is the law that all gas appliances are installed by a competent person, ie CORGI registered personnel, in accordance with the following recommendations:-

Current Gas Safety (Installation and Use) Regulations

All relevant Building Regulations issued by the Department of the Environment

Building Standards (Scotland) (Consolidation) Regulations issued by the Scottish Development Department

UK Water Regulations/Byelaws (Scotland)

Health & Safety Document No. 635 (The Electricity At Work Regulations 1989)

The installation should also be in accordance with the following British Standard Codes of Practice:-

BS 5440:1:2000	Flues
BS 5449:1990	Forced circulation hot water systems
BS 5546:2000	Installation of hot water supplies for domestic purposes
BS 6700:1997	Design, installation, testing and maintenance of services supplying water
BS 6798:2000	Installation of gas fired hot water boilers
BS 6891:1998	Gas installation
BS 7593:1992	Code of Practice for treatment of water in heating systems
BS 7671:1992	Requirements for electrical installations, IEE Wiring Regulations

If installation is in a timber framed building, refer to the Institute of Gas Engineers document IGE/UP/7.

This appliance meets the requirements of IPX4D, ie degree of protection against moisture.

Failure to install this appliance correctly could lead to prosecution. It is in your own interest and that of safety to ensure that the law is complied with.

Manufacturer's instructions must **NOT** be taken in anyway as over-riding statutory obligations.

Note: Ensure that the Benchmark Log Book has been completed after the boiler has been installed and commissioned.

2 TECHNICAL DATA

2.1 PERFORMANCE - NATURAL GAS

Alpha CB24 and CB24X

Central Heating			MAX.	MIN.
Heat Input		kW	28.4	12.1
(Gross)		Btu/h	96 900	41 300
Heat Output (modulating)		kW	23.3	9.3
		Btu/h	79 500	31 700
Burner Pressure Settings	Room sealed chamber panel fitted	mbar	10.7	2.2
		in wg	4.28	0.9
Gas Rate		m³/h	2.71	1.16
		ft³/h	95.70	40.96

Alpha CB28 and CB28X

Central Heating			MAX.	MIN.
Heat Input		kW	34.0	14.3
(Gross)		Btu/h	116 000	48 800
Heat Output (modulating)		kW	28.0	11.2
		Btu/h	95 500	38 200
Burner Pressure Settings	Room sealed chamber panel fitted	mbar	11.7	2.5
		in wg	4.68	1.0
Gas Rate		m³/h	3.25	1.37
		ft³/h	114.8	48.38

Alpha CB24 and CB24X

Domestic Hot Water			MAX.	MIN.
Heat Input		kW	28.4	12.1
(Gross)		Btu/h	96 900	41 300
Output to Water (modulating)		kW	23.3	9.3
		Btu/h	79 500	31 700
Burner Pressure Settings	Room sealed chamber panel fitted	mbar	10.7	2.2
		in wg	4.28	0.9
Gas Rate		m³/h	2.71	1.16
		ft³/h	95.70	40.96
Flow Rate at 35°C Rise		L/min	9.5	
		G.P.M.	2.1	

Alpha CB28 and CB28X

Domestic Hot Water			MAX.	MIN.
Heat Input		kW	34.0	14.3
(Gross)		Btu/h	116 000	48 800
Output to Water (modulating)		kW	28.0	11.2
		Btu/h	95 500	38 200
Burner Pressure Settings	Room sealed chamber panel fitted	mbar	11.7	2.5
		in wg	4.68	1.0
Gas Rate		m³/h	3.25	1.37
		ft³/h	114.8	48.38
Flow Rate at 35°C Rise		L/min	11.4	
		G.P.M.	2.5	

2.2 SYSTEM

Central Heating (Sealed System)	
Max. Working System Pressure	2.5 bar
Min. System Pressure	0.5 bar
Max. System temperature	82°C
Pressure Relief Valve Setting	3 bar (44 PSI)
Expansion Vessel Size (pre-charge press.)	8 L at 0.8 bar
Flow Connection	22 mm
Return Connection	22 mm
Relief Valve Connection	15 mm
Recommended System Pressure (cold)	1.0 bar
CH Water Temp. (Approx. max.)	82°C (180°F)

Domestic Hot Water		
Max. Mains Inlet Water Pressure		8 bar
Min. Mains Water Pressure		0.2 bar
Min. DHW Flow Rate		2.5 l/min
Mains Inlet Connection		15 mm
DHW Outlet Connection		15 mm
DHW Water Content	24/24X	0.2 L
	28/28X	0.24 L
Outlet Water Temp. (Approx. max.)		62°C (144°F)

2.3 COMPONENTS

Burner		Stainless steel
Main Heat exchanger		Copper
DHW Heat Exchanger		Stainless Steel
Main Burner Injectors	24/24X	1.30 mm (x12)
	28/28X	1.30 mm (x14)
Flue - Outer Duct		White
Flue - Inner Duct		Aluminium

2.4 INSTALLATION

Min. Clearances for Servicing (from casing)	Top	220 mm
	Bottom	250 mm
	Sides	5 mm
	Front	450 mm
Flue Terminal Size		100 mm Dia.
Flue Terminal Protruding		130 mm
Hole Size Required For Flue Assy.		110 mm Dia.
Lift Weight	24/24X	41 kg
	28/28X	42 kg

2.5 GENERAL

Case Dimensions (without bottom tray)	Height	720 mm
	Width	450 mm
	Depth	330 mm
Gas Connection		22 mm
Primary Water Content	24/24X	1.6 L
	28/28X	1.8 L
Air Duct Diameter		100 mm
Flue Duct Diameter		60 mm

2.6 ELECTRICAL

Supply	230/240 V ~ 50 Hz
External Fuse	3 A
Power Consumption	170 W
Internal Fuse	F2 A
Electrode Spark Gap	2 to 4 mm

2.7 FLUE LENGTHS

Flue length = 0.75 m (not including the terminal, which is supplied with the boiler)

Note: Additional flues (of the same length) are available.

Length of Flue Required:-

Rear Flue = wall thickness + 175mm

Side Flue = wall thickness + distance between wall and side of boiler + 185 mm

Vertical Flue = distance from top of boiler side panel to required roof position minus 1 m for vertical terminal assembly

Maximum flue length = 4 m

Each additional 90° Bend is equivalent to 1 m of flue length

Each 45° Bend is equivalent to 0.5 m of flue length

The Vertical Flue terminal assembly is equivalent to 1 m of flue length

2.8 AVAILABLE PUMP HEAD FOR CENTRAL HEATING

Output		Available pump head				Flow rate				Pressure loss across boiler			
kW	Btu/h	17°C		20°C		17°C		20°C		17°C		20°C	
		metres	feet	metres	feet	litre/min	gal/min	litre/min	gal/min	metres	feet	metres	feet
23.3	79 500	2.4	7.9	3.2	10.5	19.6	4.3	16.7	3.7	2.5	8.2	2.3	7.5
17.58	60 000	3.8	12.5	4.4	14.4	14.8	3.3	12.6	2.8	1.9	6.2	1.3	4.3
14.65	50 000	4.5	14.8	4.8	15.8	12.3	2.7	10.5	2.3	1.25	4.1	0.95	3.1
11.63	40 000	5.1	16.7	5.35	17.5	9.8	2.2	8.3	1.8	0.8	2.6	0.65	2.1
9.3	31 700	5.45	17.9	5.65	18.5	7.8	1.7	6.7	1.5	0.5	1.6	0.4	1.3

This information is based on 17°C and 20°C system design temperature difference.

Note: For outputs upto 28 kW refer to section 3.7.

2.9 ELECTRICAL CONNECTIONS

Note: This Appliance Must Be Earthed

An optional integral Clock kit is available if required.

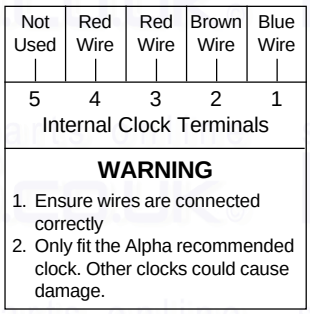

Clock connections

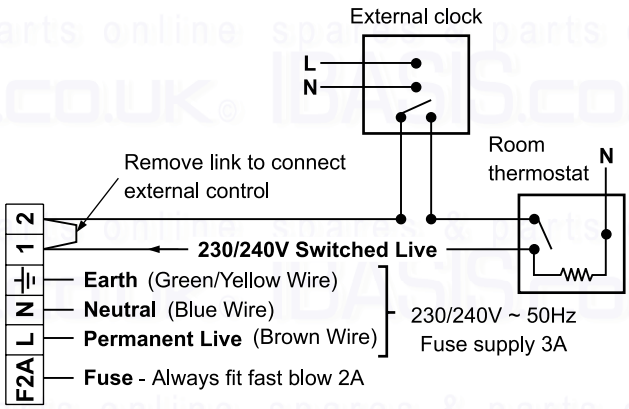

Boiler terminal block

Fig. 1

2.10 BOILER SCHEMATIC

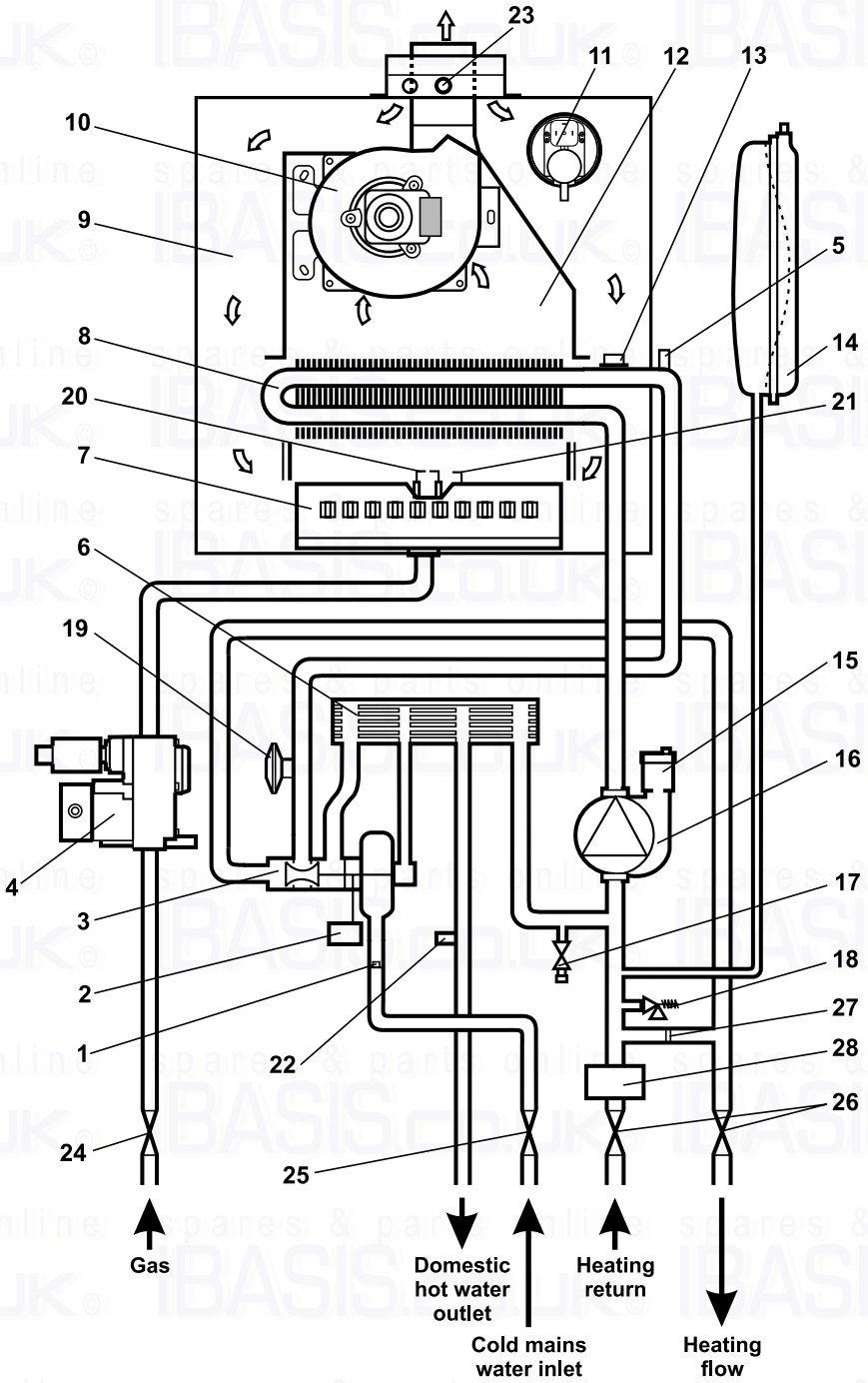

1	-	Seasonality valve (N/A to 24X/28X)
1	-	Flow regulator (24X/28X)
2	-	DHW switch
3	-	Diverter valve and DHW flow valve
4	-	Gas valve
5	-	Primary temperature sensor
6	-	DHW heat exchanger
7	-	Main burner
8	-	Primary heat exchanger
9	-	Room sealed chamber
10	-	Fan
11	-	Air pressure switch
12	-	Flue hood
13	-	Overheat thermostat
14	-	Expansion vessel
15	-	Automatic air vent
16	-	Pump
17	-	Drain point
18	-	Pressure relief valve
19	-	Primary pressure switch
20	-	Ignition electrodes
21	-	Flame sensing electrode
22	-	DHW temperature sensor (N/A to 24X/28X)
23	-	Flue sampling point
24	-	Gas service cock
25	-	Mains inlet on/off valve
26	-	On/off valve (2 off)
27	-	Automatic by-pass (N/A to 24X/28X)
28	-	Cyclone separator (N/A to 24X/28X)

Fig. 2

3 GENERAL BOILER INFORMATION

3.1 GAS SUPPLY

The Alpha CB24 and CB24X boilers require a gas rate of 2.71 m³/h (95.7 ft³/h) and the Alpha CB28 and CB28X a gas rate of 3.25 m³/h (114.8 ft³/h).

The meter and supply pipes must be capable of delivering this quantity of gas in addition to the demand from any other appliances in the house. The boiler requires at least a 22 mm gas supply pipe.

The complete installation, including the meter, must be tested for gas soundness and purged as described in BS 6891.

3.2 ELECTRICAL SUPPLY

The boiler requires a 230/240 V ~ 50 Hz mains supply, fused at 3 A

The boiler must be earthed.

There must only be one common isolator, providing complete electrical isolation, for the boiler and any external controls.

This boiler has been fitted with a supply cable, however, if it is necessary to fit a cable use PVC insulated cable not less than 0.75 mm² (24 x 0.2 mm) to BS 6500 Table 16. The boiler should be connected to a fused three pin plug and unswitched shuttered socket outlet (both complying with BS 1363), or a fused double pole switch with a contact separation of at least 3 mm in both poles.

Wiring external to the boiler must be in accordance with the current IEE Wiring Regulations (BS 7671).

Note: If a room thermostat is fitted, it must be suitable for 230/240 V switching.

3.3 AIR SUPPLY

The boiler does not require any air vents for cooling in the room in which it is installed or when installed in a cupboard or compartment. The minimum clearances for servicing must always be maintained.

Note: A cupboard or compartment used to enclose the boiler must be designed and constructed specifically for the purpose, i.e. comply with the Building Regulations.

3.4 FLUE SYSTEM - Fig. 3

The flue system must be installed in accordance with BS 5440:1.

For horizontal flues ensure there is a slight downward slope towards the terminal.

Flue components are available as follows:-

Top easy-flue 500 mm (includes 90° bend), refer to separate instructions

0.75 m flue
90° bend
45° bend
Vertical flue terminal assembly. Refer to the separate installation instructions supplied with the assembly.
A Twin Pipe Flue system is available for use with all the boilers in the range. Refer to the separate instructions for details.

The following methods determine the correct length of flue required.

For rear exit flue L = B + 175 mm

For side exit flue L = B + C + 185 mm (min. side clearance required is 5 mm)

For vertical flue L = H minus 1000 mm for vertical terminal assembly

Where L = Required flue length
B = Finished wall thickness
C = Distance from the inside wall to the side of the boiler
H = Distance from top of boiler side panel to roof position

Note:
1. If an extra 90° bend is used, this reduces the maximum flue length by 1 m. Each 45° bend used reduces the maximum flue length by 500 mm.
2. Under no circumstances must the flue length (including allowances for extra bends) exceed 4 metres.
3. Failure to use Alpha flue components with the boiler will invalidate the boilers CE approval, warranty and may be unsafe.

HORIZONTAL FLUE OPTIONS - Lmax = 4 metres

L = B + C + 185 mm

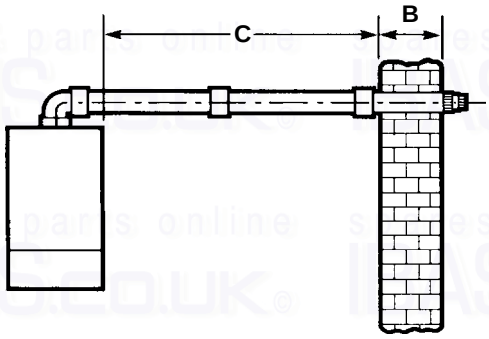

L = B + C + E + 185 mm

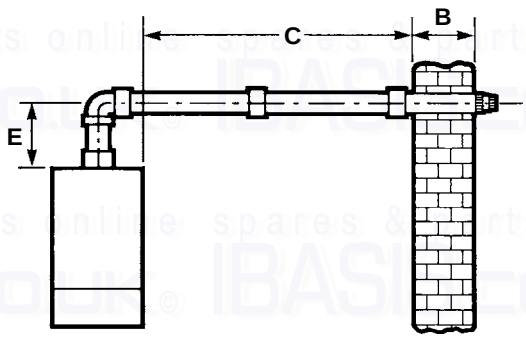

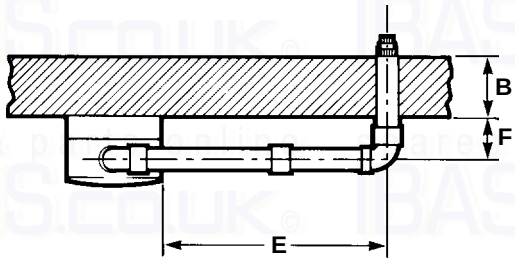

L = B + E + F + 185 mm + (90° bend = 1 metre)

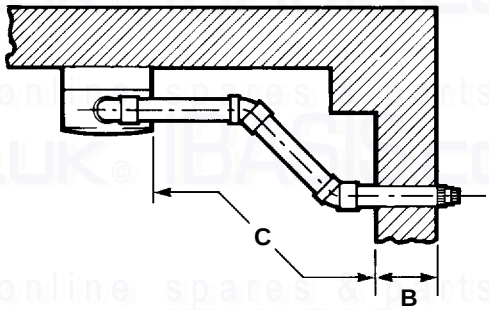

L = B + C + 185 mm + (2 x 45° bends = 1 metre)

VERTICAL FLUE OPTIONS

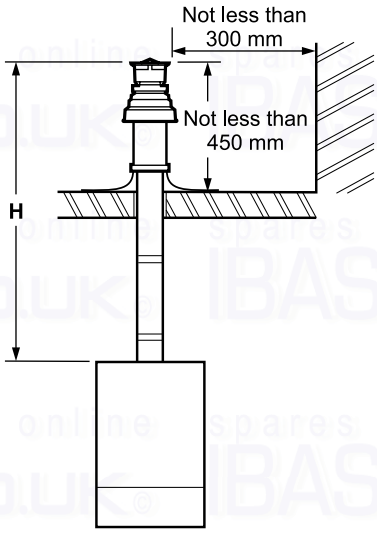

Hmax = 4 m

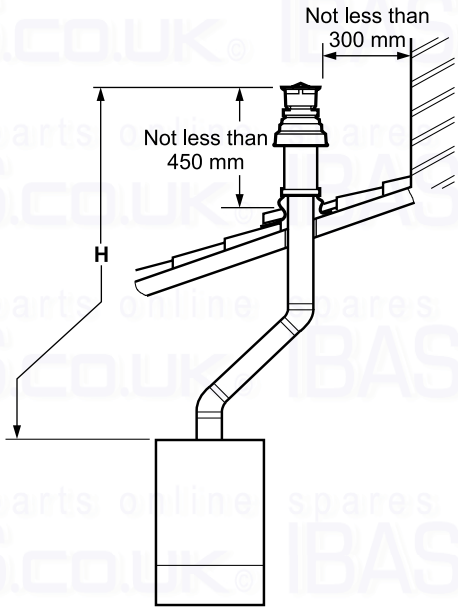

Hmax = 3 m

Fig. 3

3.5 FLUE TERMINAL LOCATION - Fig. 4

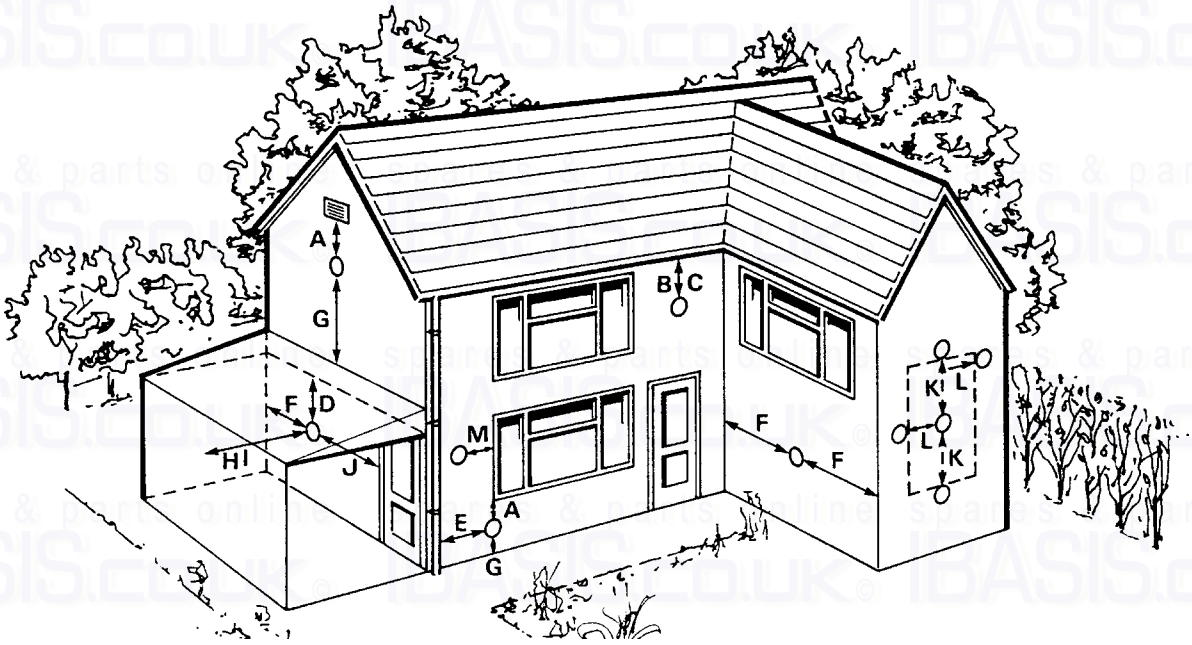

Fig. 4

	Terminal position	Min. distance
A	Directly below an opening, air brick, windows, etc.	300 mm
B	Below gutters, soil pipes or drain pipes	75 mm
C	Below eaves	25 mm
D	Below balconies or car port roof	25 mm
E	From a vertical drain pipe or soil pipe	25 mm
F	From an internal or external corner	25 mm
G	Above ground, roof or balcony level	300 mm
H	From a surface facing the terminal	600 mm
I	From a terminal facing the terminal	1200 mm
J	From an opening in the car port (e.g. door, window) into dwelling	1200 mm
K	Vertically from a terminal on the same wall	1500 mm
L	Horizontally from a terminal on the same wall	300 mm
M	Horizontally from an opening, air brick, window etc.	300 mm

The flue terminal must be exposed to the external air and the position must allow the free passage of air across it at all times. In certain weather conditions the terminal may emit a plume of steam. Avoid positioning the terminal where this may cause a nuisance.

If the terminal is fitted within 850 mm of a plastic or painted gutter or 450 mm of painted eaves or 300 mm of a plastic car port roof, an aluminium shield at least 1 m long should be fitted to the underside of the gutter or painted surface. If the terminal is fitted less than 2 m above a surface to which people have access, the terminal must be protected by a terminal guard.
A suitable guard is available from:
Tower Flue Components Ltd., Vale Rise, Tonbridge, Kent TN9 1TB

3.6 BOILER LOCATION

The boiler is not suitable for external installation.

The boiler must be installed on a flat vertical wall which is capable of supporting the weight of the boiler. The boiler can be fitted to or adjacent to a wall comprising of a combustible material without the need for a special thermal insulation barrier.

If the boiler is to be fitted in a timber framed building, it should be fitted in accordance with the British Gas publication 'Guide for Gas Installations in Timber Frame Housing', reference DM2.

The boiler may be installed in any room or internal space, although particular attention is drawn to the requirements of the current IEE Wiring (BS7671) Regulations, and in Scotland, the electrical provisions of the Building Regulations applicable in Scotland, with respect to the installation of the boiler in a room or internal space containing a bath or shower. Where a room-sealed boiler is installed in a room containing a bath or shower, it must not be possible for a person using the bath or shower to touch any electrical switch or boiler control utilising mains electricity.

The boiler may be installed in a cupboard or compartment, provided it is correctly designed for that purpose, i.e. complies with the Building Regulations and the requirements of BS 6798.

3.7 CENTRAL HEATING SYSTEM - Fig. 5

The boiler is designed for use in a sealed central heating system in accordance with the requirements of BS 5449 and BS 6798. The system should be designed to operate with flow temperatures of up to 82°C. When designing the system, the pump head, expansion vessel size, mean radiator temperature, etc. must all be taken into account. Refer to the pump performance table for guidelines.

System volume - The expansion vessel incorporated into the boiler is suitable for a sealed heating system with a maximum water content of 80 litres (18 gal). For guidance on water contents contact Alpha Therm Ltd. for Technical Data Sheet 15. Above 80 litres, consideration should be given to fitting an additional expansion vessel fitted in the position shown in Fig. 5. To check correct operation of the expansion vessel(s) the system pressure should not be more than 2.5 bar when the system is at maximum operating temperature (for further guidance refer to BS 7074:1).

The boiler is supplied with the following components built in:-

Pressure relief valve - complying with BS 6759 and set to operate at 3 bar. The discharge pipe must be routed clear of the boiler to a drain, in such a manner that it can be seen, but cannot cause injury to persons or property.

Pressure gauge - To indicate the system pressure to be maintained.

Expansion vessel - Conforming to BS 4814 with a capacity of 8 litres and pre-charged to a pressure of 0.8 bar.

By-pass - Where all radiators are fitted with thermostatic radiator valves an external by-pass may be required.

Cyclone (N/A CB24X/28X) - This is a device fitted in the heating return within the boiler to remove any foreign or solid matter etc. from the system.

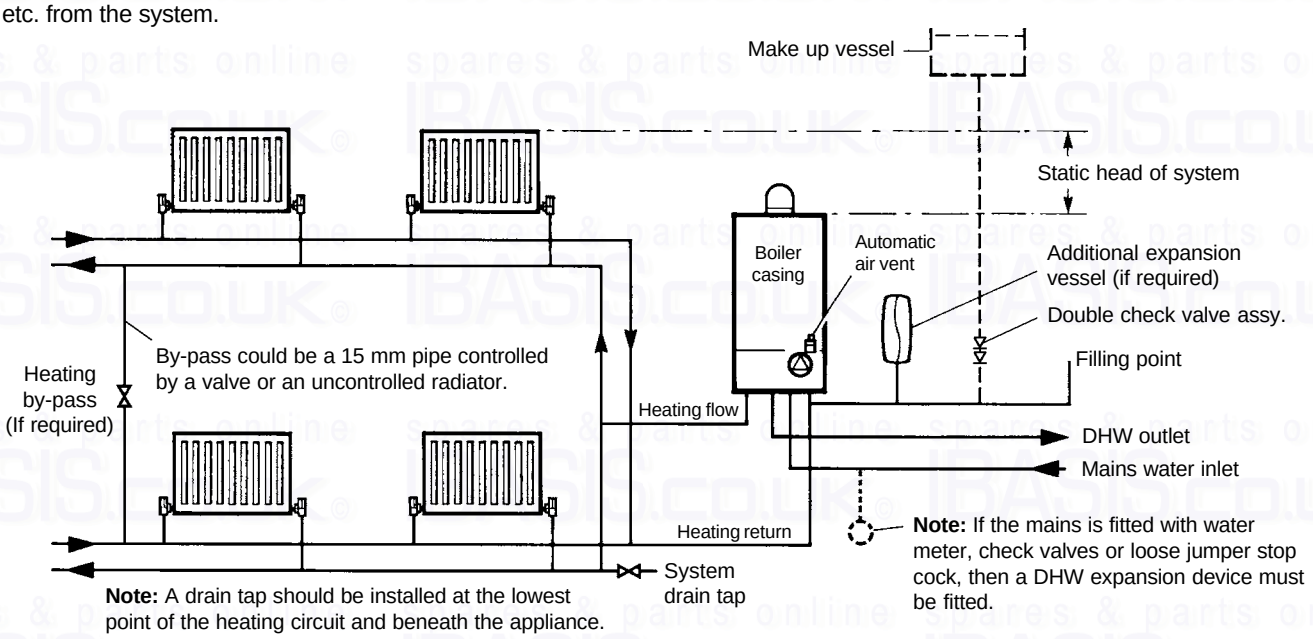

Fig. 5

3.8 FILLING THE CENTRAL HEATING SYSTEM - Figs. 6, 7

The system design pressure (cold) should be set to 1.0 bar. This pressure is equivalent to a static head (see Fig. 5) of 10.2 metres of water.

Provision should be made to replace water lost from the system. This can be by manual or automatic means, as shown in Figs. 6 and 7. The position for connecting an automatic make-up vessel is indicated in Fig. 5. A double check valve assembly must be used, as shown in Fig. 7.

Filling of the system must be carried out in a manner approved by the local Water Undertaking. Where allowed, the system may be filled via a temporary connection as shown in Fig. 6. After filling, always disconnect the flexible hose of the filling loop.

All fittings used in the system must be able to withstand pressures up to 3 bar.

Drain taps (to BS 2879) must be used to allow the system to be completely drained.

Although the Cyclone is fitted in the heating return, the heating system should still be thoroughly flushed before the boiler is connected and again after the first heating. The Cyclone collection point should be emptied via it's drain point (see Fig. 11) after flushing has been completed.

If it is required to add inhibitor to the system, refer to Alpha Therm Ltd. for guidance.

Refer to BS 5449 and BS 6798 for further information.

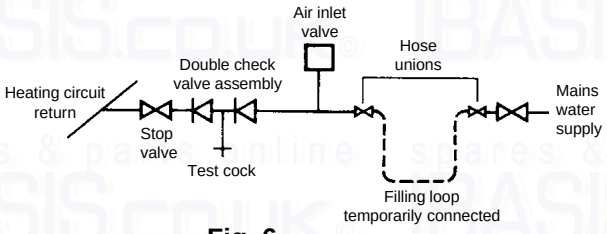

Fig. 6

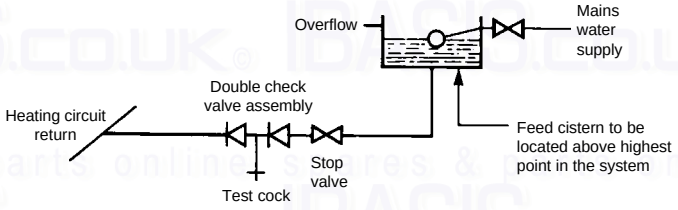

Fig. 7

3.9 DOMESTIC HOT WATER SYSTEM

The minimum flow rate needed for the flow switch and burner to operate is 2.0 litres/min.

The incoming mains water pressure should be between 0.2 and 8 bar to ensure efficient operation. If the pressure is above 7 bar a pressure reducing valve must be fitted.

To ensure economic use, the pipe runs between the boiler and taps should be in 15 mm copper pipe and be as short as possible. Where possible the pipework should be insulated to reduce heat loss.

All taps and mixing valves used with the hot water system must be suitable for operating at a mains pressure of up to 8 bar.

Showers - A shower may be used with the boiler if required.
If a loose or flexible head type shower is used it may require the fitting of a double check valve, to comply with Water Bye Law 17.

Bidets - No anti-syphonage arrangements are necessary, provided the outlets are shrouded and it is not possible to attach a temporary hand held spray. A supply of direct mains fed hot and cold water is permitted provided the appliance is of the over-rim flushing type.

Before the mains water supply pipe is connected to the boiler, it should be thoroughly flushed out to avoid the danger of dirt or foreign matter entering the boiler.

The mains water supply connection to the boiler must be the first connection from the mains supply.

Seasonality valve - When this valve has been set to give the temperature of hot water required by the user, it will automatically maintain the set hot water temperature for both summer and winter conditions by automatically changing the flow rate through the boiler.

4 INSTALLATION

4.1 UNPACKING

1. The boxes required when the boiler is installed with a horizontal flue are as follows:-

   Box 1 Cased boiler fitted with water and gas valves, filling loop, union bends and washers
   Mounting bracket plus screws and wall plugs
   Flue terminal and flue sealing collar plus 2 screws
   Literature pack and Wall template

   Box 2 90° flue bend (not required for vertical flue)

   Box 3 0.75 m flue (for side and rear flue) with two clamps and inner duct support

   Note: If an Easy flue 500 mm is ordered, this will be supplied instead of boxes 2 and 3.

2. Unpack boiler and remove the loose items packs, i.e. mounting bracket, flue terminal and collar.

   Note: The boiler can be stood in an upright position supported by the bottom tray, (to allow this, the union bends have been turned upwards so that they do not protrude beneath the bottom tray - check this before standing the boiler on the bottom tray).

4.2 CLEARANCES REQUIRED - Fig. 8

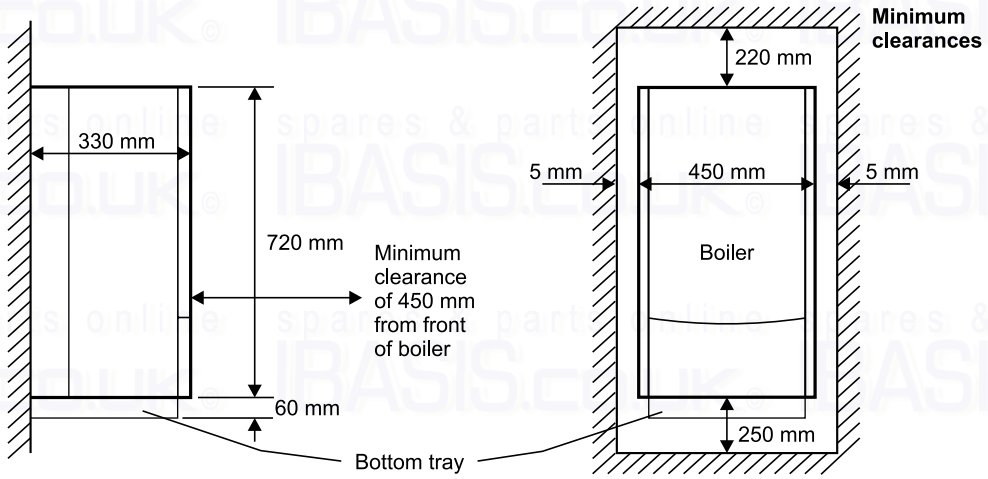

Fig. 8

4.3 PREPARE THE WALL - Figs. 9, 10

1. Decide upon the position of the boiler taking into account the clearances required for servicing and the flue terminal position.
2. Tape the template to the wall (ensure it is level and the right way up) and mark the position of the holes for the boiler mounting bracket and bottom fixings. If rear exit flue is used, mark the position of the hole for the flue.
3. **Side exit flue -** Continue the horizontal centre line of the flue across the wall to the side wall, then along the side wall 215 mm (ensure the lines are horizontal). This will give the position of the centre of the hole for the flue.
4. Cut the 110 mm diameter hole (or use a 107 mm core drill) in the wall for the flue.
   Note: For internal fitting of the flue, using the flue sealing collar supplied, cut a 127 mm dia. flue hole using a 127 mm core drill.
5. Drill the fixing holes (10 mm dia.) to accept the No.10 plugs supplied. Using the screws supplied, fit the mounting bracket.
6. **Top pipe connections -** Preform the pipework at the back of the boiler before hanging the boiler, see Fig. 10, and secure in the clips provided.

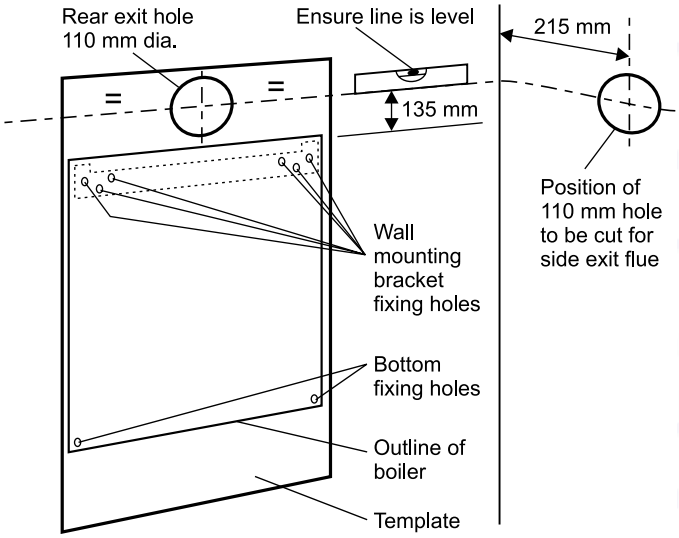

Fig. 9

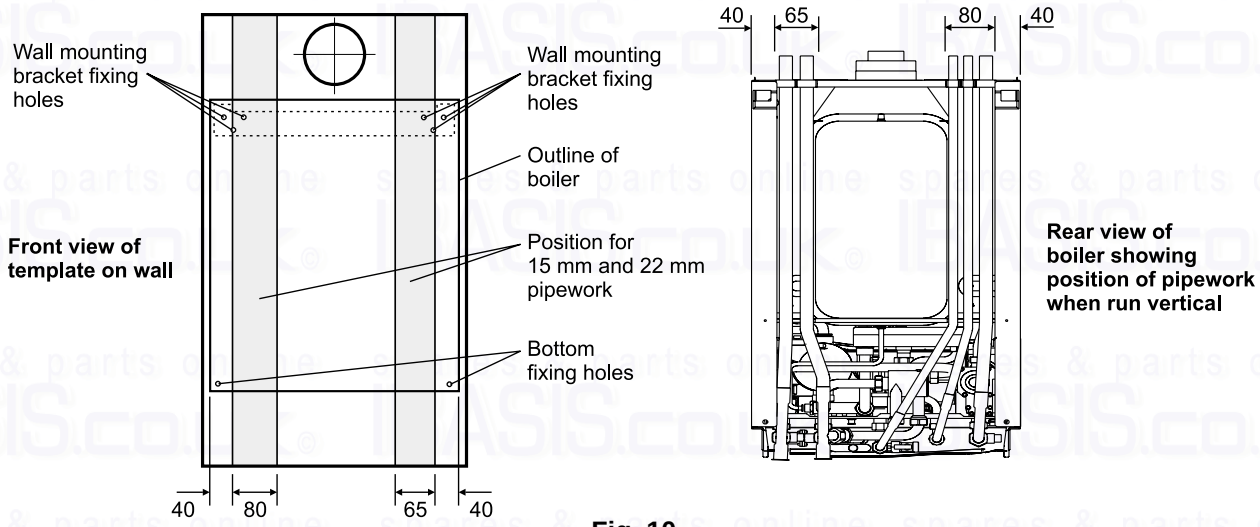

Fig. 10

4.4 FIT THE BOILER - Refer to Fig. 10

1. Lift the boiler and locate it on the mounting bracket.
2. Fit the bottom screws to secure the boiler in position.

4.5 CONNECT THE PIPEWORK - Fig. 11

1. Thoroughly flush out all the water pipework.
2. The valves/fittings have been factory fitted, however, check that all the connections underneath the boiler have been tightened, especially the union bends.
   To gain access to all the connections remove the bottom tray by removing the four fixing screws. When all the connections have been checked for soundness replace the tray and secure with the four screws previously removed.
   The heating union bends have been designed to enable the heating pipes to be routed from above and/or below using the same fitting.
   Note: When soldering to the boiler union bends, ensure the bends are not connected to the valves, otherwise the internal seals may be damaged.
3. Connect the system pipework to the boiler.
   Note: Do not forget that the pressure relief valve discharge pipe must be routed clear of the boiler to a drain in such a manner that it may be seen, but cannot cause injury to persons or property.
4. Ensure that all the valves are closed (spindle flats at right angles to valve) and do not turn on the water or gas supplies at this stage.

Alpha CB24 and CB28

Note: Disconnect the filling loop after filling the central heating system.

A - Heating flow (22 mm)
B - Hot water outlet (15 mm)
C - Gas inlet (22 mm)
D - Cold water mains inlet (15 mm)
E - Heating return (22 mm)
F - Pressure relief valve (15 mm)
G - Heating drain point
H - Cold water inlet filter
I - Seasonality valve adjuster
J - Cyclone drain point

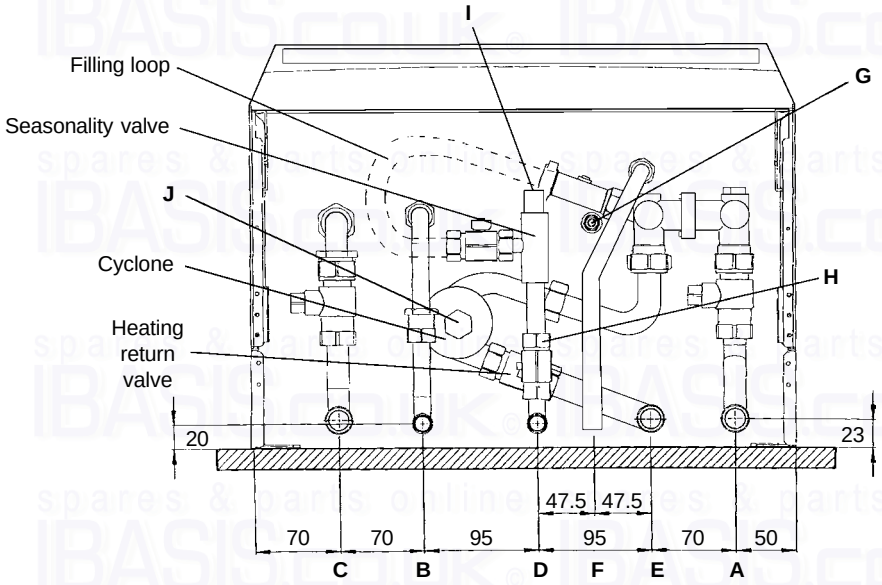

Alpha CB24X

A - Heating flow (22 mm)
B - Hot water outlet (15 mm)
C - Gas inlet (22 mm)
D - Cold water mains inlet (15 mm)
E - Heating return (22 mm)
F - Pressure relief valve (15 mm)
G - Heating drain point
H - Cold water inlet filter

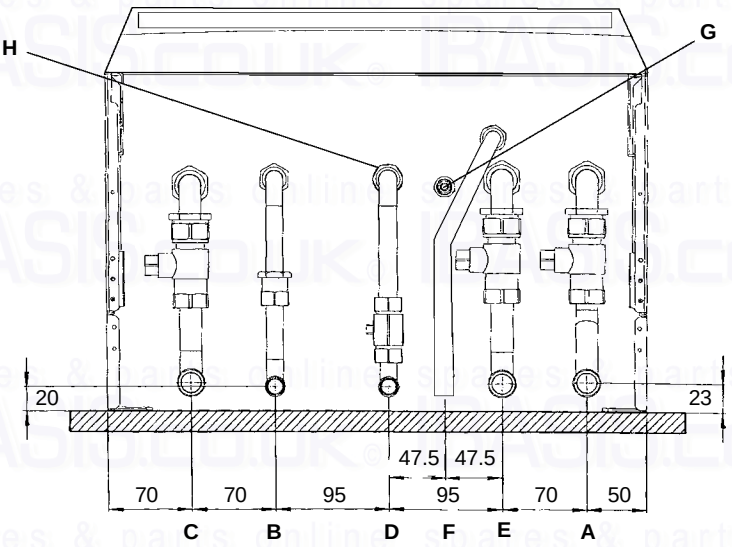

Fig. 11

4.6 FIT THE FLUE - Figs. 12, 13

1. The following procedure applies to both rear or side exit flue. The only difference being the lengths to which the ducts are cut.
   Rear flue Outer air duct length = finished wall thickness + 135 mm.
   Inner flue duct length = finished wall thickness + 172 mm.
   Side flue Outer air duct length = finished wall thickness + the distance from the inside wall to the side of the boiler + 145 mm.
   Inner flue duct length = finished wall thickness + the distance from the inside wall to the side of the boiler + 162 mm.
2. If the overall length of the inner duct is greater than 750 mm then a flue extension is required. To fit an extension refer to the following section.
3. Withdraw the inner flue duct from the outer air duct.
4. Mark the outer air duct to match the length given above, measure from the end of the tube as shown in Figs. 12 and 13.
5. Mark the inner flue duct to match the length given above.
6. Cut both the inner and outer ducts to length.
   Note: Do not cut the outer duct end with the two holes, these are for securing the terminal.
   Ensure that all cuts are square and burr free.
7. Fit the flue terminal to the outer duct ensuring it is fully located and secure with the two screws provided.
8. Place the inner flue duct back into the outer duct.

9. Pass the flue assembly through the wall (from inside or outside).
Note: Internal fitting - If there is no access to make good the outside wall, locate and secure the flue sealing collar onto the outer duct of the flue immediately before the terminal. Push the flue assembly through the 127 mm flue hole, so that the collar completely passes through the wall. Then pull the flue assembly back into the correct position. Visually check that the collar is sealing the outside wall and that it is not restricting any of the openings of the flue terminal.
10. Position the seal and clamp (two screws), supplied with the bend, over the boiler flue adaptor. Fit the bend and rotate to the correct position, then secure in position. See Fig 12.
Note: Ensure that the seal is located over both the bend and the flue adaptor.
11. Place the inner (no seal) duct clamp in position over the bend outlet as shown in Figs. 12 and 13, and position the outer duct seal over the bend.
12. Push the outer duct into the wall slightly at the same time as pulling the inner duct towards the bend, inserting it fully into the clamp on the bend. Tighten the clamp to secure the inner duct.
Note: Ensure the inner duct clamp screwed joint is at the bottom.
13. Pull the outer duct towards the bend. Check that the flue terminal protrudes 130 mm out of the wall, then position the seal equally over the joint between the bend and the outer duct. Dismantle the clamp, position it over the seal (if applicable) and secure in position.
14. Make good the inside and outside walls. The flue sealing collar could be used for making good either the outside or inside by locating it over the outer duct of the flue and pushing it tight against the wall. If fitting the collar externally, ensure it does not restrict any of the openings of the flue terminal.

4.7 FIT A FLUE EXTENSION - Figs. 12, 13

Note: 1. The maximum flue assembly length must not exceed a length of 4 metres.
2. If the flue is more than 1.5 m, the restrictor must be removed from the boiler flue adaptor (see Fig. 13).

1. Withdraw the inner flue duct from the outer air duct supplied with the boiler.
2. Withdraw the inner flue duct from the extension. Secure the two ducts together using the clamp supplied with the extension, ensure that the ducts are butted together and the clamp is central over the joint.
3. Secure the outer ducts together using the silicone seal (if applicable) and clamp supplied with the extension.
4. With all the ducts assembled together, cut to the following lengths:-
Rear flue Outer air duct length = finished wall thickness + 135 mm.
Inner flue duct length = finished wall thickness + 172 mm.
Side flue Outer air duct length = finished wall thickness + the distance from the inside wall to the side of the boiler + 145 mm.
Inner flue duct length = finished wall thickness + the distance from the inside wall to the side of the boiler + 162 mm.
5. When measuring the outer duct, measure from the end of the tube as shown in Figs. 12 and 13.
6. Cut both the inner and outer ducts to length. Ensure that all cuts are square and burr free.
7. Fit the flue terminal to the outer duct ensuring it is fully located and secure with the two screws provided.
8. Place the inner flue duct back into the outer duct. Use the inner duct supports to centralise the duct in the outer duct.
9. Fit the flue assembly as described in the previous section. Due to the size of the flue clamps the flue must be fitted from inside the building.
10. It may be necessary to support the flue with suitable brackets (every metre) when flue lengths approaching the maximum are used.

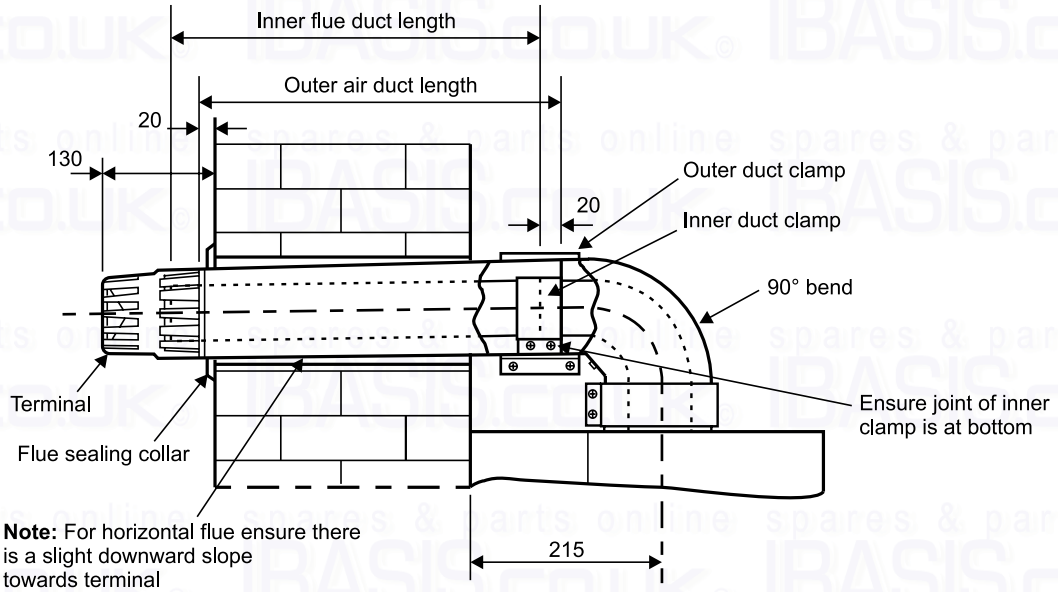

Fig. 12 - Rear flue

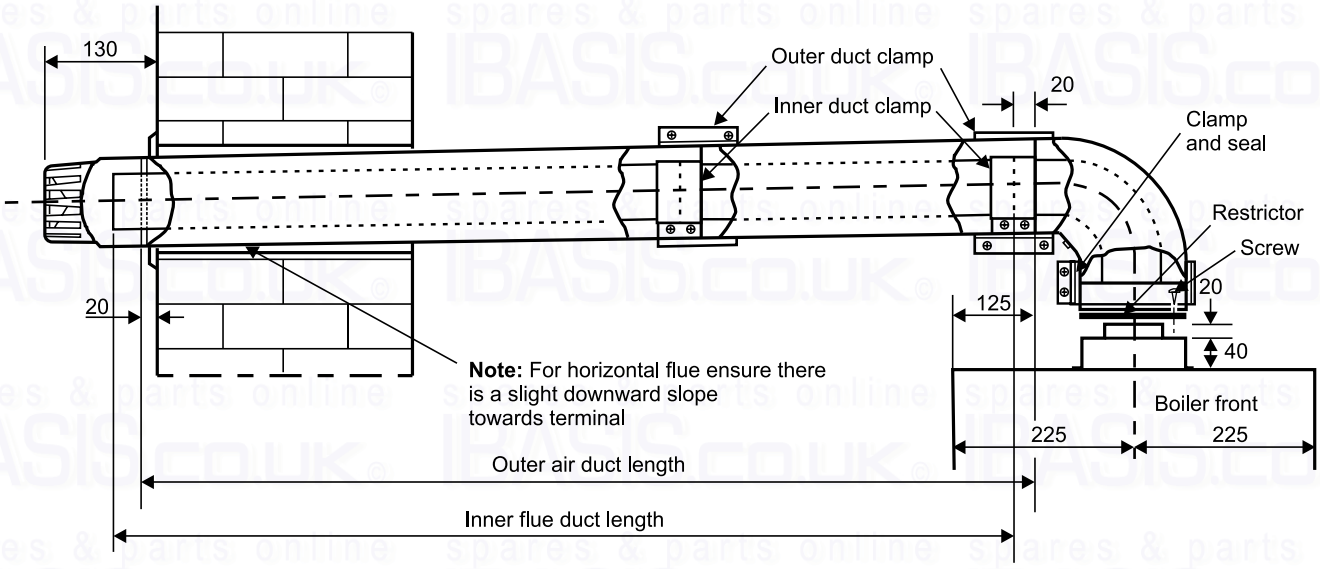

Fig. 13 - Side flue

4.8 CONNECT THE MAINS SUPPLY - Fig. 14

1. Gain access to the boiler terminal block by releasing the two fixing screws (one each side) securing the control panel and lowering the panel. Refer to Technical Data, section 2.9 for connection details.
2. **Note:** This boiler has been fitted with a mains supply cable. However, if it is necessary to fit an alternative supply cable, ensure the cable clamp that has been fitted is removed and connect as follows:-
   Remove the two screws securing the terminal block cover from the back of the control box (see Fig. 14).
   Pass the mains supply cable through the cable clamp and connect as follows:- Brown to L, Blue to N and Green/Yellow to ⏚. Ensure correct polarity.
   Note: Ensure that the length of the earth wire is such that if the supply cable is pulled out of its clamp the live and neutral wires become taut before the earth wire.
   The main terminal block can be removed by pulling it off the pins to give easy access to the terminals.
   Do not switch on the electrical supply at this stage.

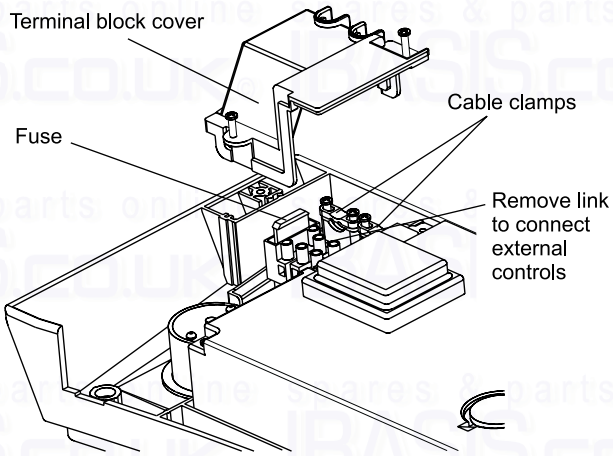

Fig. 14

3. If an external control, i.e. room thermostat or external clock is to be fitted, remove the terminal block cover and remove the link between terminals 1 and 2. Pass the cable through the cable clamp and connect it to terminals 1 and 2. Replace the terminal block cover. (Refer to section 2.9).
4. Replace the terminal block, ensuring it is located correctly on the plastic pins and replace the cover.
5. Ensure that there is sufficient free cable to allow the control panel to be raised and lowered then tighten the cable clamp screws.
6. Leave the control panel open until commissioning procedures have been completed.
7. Carry out electrical system checks - Short circuit, Polarity, Earth continuity and Resistance to earth with a suitable multimeter.

4.9 FIT THE CLOCK KIT - Fig. 15

Ensure the electrical supply to the boiler is isolated.

1. Remove the two screws securing the clock cover at the rear of the control panel.
2. Remove and discard the clock blanking panel.
3. Insert the clock into the opening and secure in place with the screws supplied.
4. Disconnect the clock wiring from the terminal block and connect it to the clock as follows:-
   Blue wire to terminal 1, Brown wire to terminal 2 and Red wires to terminals 3 and 4, (or as per the instructions supplied with the clock). Ensure wiring is correct.
5. Replace the clock cover. Do not overtighten the fixing screws.
6. Leave the control panel open until commissioning procedures have been completed.

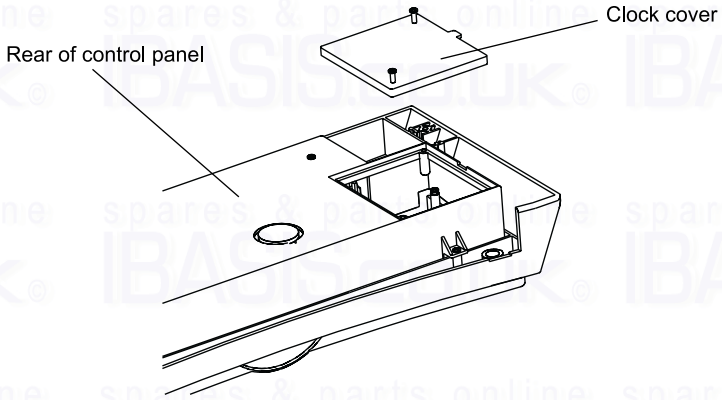

Fig. 15

5 COMMISSIONING

When commissioning the boiler, ensure the Benchmark Log Book is completed.

5.1 FILL THE SYSTEM

1. The boiler is fitted with an automatic air vent positioned on the pump (see Fig. 2). The vent is always open and has no sealing cap.
2. Open the central heating flow and return valves (slot in-line with valve) (see Fig. 11).
3. Open the fill point valve on the filling loop until water is heard to flow. To aid venting, the boiler drain point (see Fig. 2) may be opened until water flows out. Close the drain point as soon as water appears.
4. To remove the air - Vent each radiator in turn, starting with the lowest in the system.
5. It is important that the pump is properly vented to avoid it running dry and damaging its bearings. Unscrew and remove the cap from the centre of the pump. Using a suitable screwdriver rotate the exposed spindle about half a turn, then replace the cap.
6. Check the operation of the pressure relief valve (see Fig. 2) by turning the head anti-clockwise until it clicks. The click is the valve lifting off its seat allowing water to escape from the system - check that this is actually happening.
7. Continue to fill the system until the pressure gauge indicates 1.0 bar. Close the fill point valve and check the system for water soundness, rectifying where necessary. Disconnect the filling loop from the mains supply.
   Water may be released from the system by manually operating the drain point (see Fig. 2) until the system design pressure is obtained. The system design pressure (cold) should be between 0.75 and 1.25 bar.
   Refer to sections 3.7 and 3.8. System volume and Filling the system.
8. Open the mains water inlet valve (see Fig. 11). Turn on all hot water taps and allow water to flow until no air is present. Turn off taps.

5.2 BOILER CONTROLS - Fig. 16

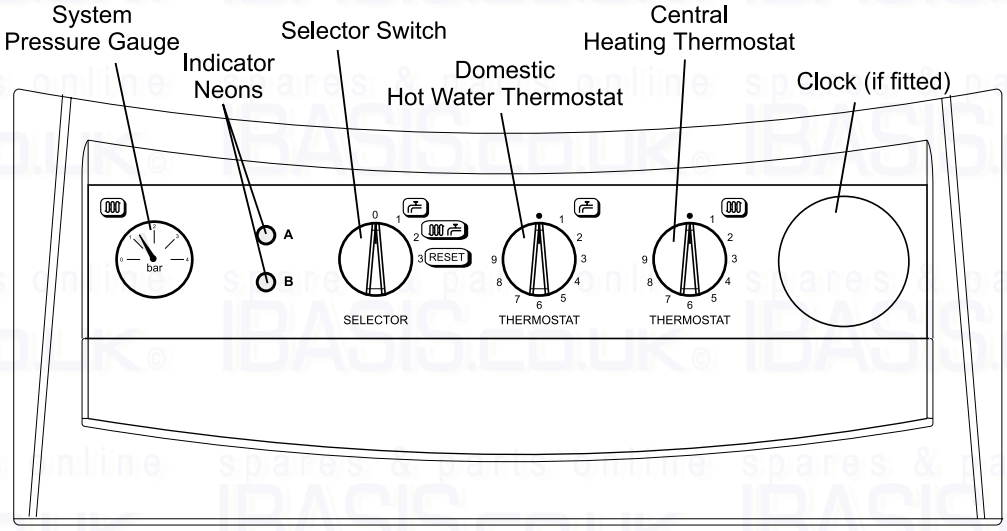

Fig. 16

5.3 TEST FOR GAS SOUNDNESS AND PURGE THE SUPPLY

1. With the boiler gas service cock closed (slot at right angles to valve). Pressure test the gas supply and inlet pipework connection to the boiler gas service cock for soundness in accordance with BS 6891.
2. Loosen the gas inlet pressure test point screw on the gas valve (see Fig. 17). Ensure the gas supply is on and open the boiler service cock to purge in accordance with BS 6891.
3. Retighten the test point screw and test for gas soundness. Close the boiler gas service cock.

5.4 INITIAL LIGHTING - Refer to Fig. 16

1. Ensure that the gas and electrical supplies to the boiler are off and that the mains water inlet valve and the central heating flow and return valves are open.
2. Turn on the gas and electrical supplies to the boiler.
3. Ensure all external controls are calling for heat. If the optional Clock is fitted, refer to the User's instructions, set the time and ensure the Clock is in an 'on' mode.
4. Set the hot water and central heating temperature selectors to maximum.
5. Set the selector switch to (DHW only).
6. Open a hot water tap, the main burner will light and the boiler will provide hot water. Close the tap and the burner will go out.
7. Set the selector switch to (CH and DHW). The boiler will now run in the central heating mode. The pump will start, the fan will start; once the pressure switch is proved, the main gas valve solenoid will open allowing the main burner to light from the ignition electrodes.

5.5 CHECK THE BURNER PRESSURES - Fig. 17

Turn the boiler off. Loosen the burner pressure test point screw on the gas valve and connect a pressure gauge. Allow the boiler to run for 10 minutes and check the burner pressures.

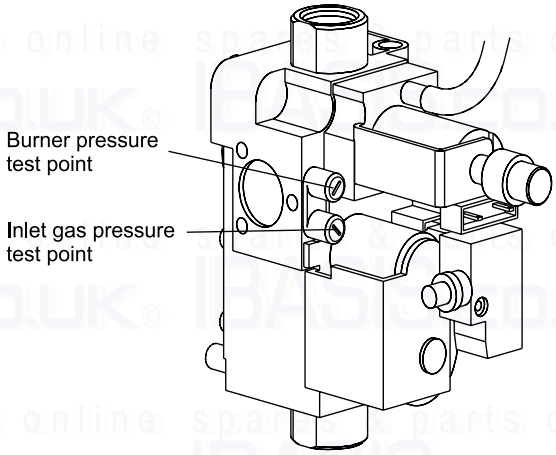

Fig. 17

Hot water mode

1. Set the selector switch to (DHW only) and fully open a hot water tap.
2. The burner will light at the ignition rate and the burner pressure will increase to maximum.
3. Gradually close the hot tap and check that the burner pressure decreases to its minimum. Fully open the tap and check that the burner pressure increases. Close the tap and check that the burner goes off.
   The burner pressure settings have been factory set and do not require adjusting. If incorrect, check that the inlet gas pressure is 20 mbar.
   If the inlet gas pressure is not 20 mbar, either the pipework is too small or the gas supply to the house is insufficient, in which case contact your gas supplier.

Central heating mode

1. Set the selector switch to (DHW and CH).
2. The burner will light at the ignition rate and will increase to the factory pre-set maximum output after 1 minute.
3. Turn off the boiler. Disconnect the pressure gauge and tighten the test point screw.

Test for gas soundness using suitable leak detection fluid.

Note: Refer to Technical Data, section 2.1 for burner pressure settings.

5.6 FINAL COMMISSIONING

1. Allow the heating system to heat up, then balance the system to achieve the necessary temperature difference across the heating flow and return pipes at the boiler and check the system volume and pressure. (Refer to Technical Data, sections 2.2 and 2.8).
2. Turn off the boiler.
3. Thoroughly flush out the water pipework and with no pressure in the boiler heating circuit, empty the cyclone at it's drain point (see Fig. 11) of any debris. Clean the mains water inlet filter (see Fig. 11).
4. Re-pressurise the system as described in section 5.1.

5.7 FINAL ASSEMBLY

1. Raise the control panel and secure in position with the screws provided.
2. If the boiler is to be left in service with the User, set the controls, clock (if fitted, see User's Operating manual) and room thermostat (if fitted) to the User's requirements.

3. **Seasonality valve - CB24 and CB28 only:** Set the seasonality valve (see Fig. 11) to the User's requirements, i.e. to the required temperature of hot water from the tap. This is achieved by fully opening a hot water tap and turning the adjusting screw (access hole in front of bottom tray) with a screwdriver. Anticlockwise to increase the temperature and clockwise to decrease.
   Note: Check the hot water temperature before adjusting the screw - it may be set correctly.
   Once set no further adjustment should be required. The valve will automatically adjust the flow rate for summer and winter conditions.
4. If the boiler is not to be handed over immediately, close the boiler gas service cock and switch off the electrical supply.
5. If there is any possibility of the boiler being left during frost conditions, then the boiler and system should be drained (refer to section 8.2). It is recommended that a label is attached to the boiler drawing attention to the fact that the system has been drained.
6. Complete the details of the installation on the back page of this manual and the Benchmark log book.

5.8 USER INFORMATION

The User must be advised (and demonstrated if necessary) of the following important points:-

1. How to light and turn off the boiler and how to operate the system controls.
2. The importance of annual servicing of the boiler to ensure safe and efficient operation.
3. That any servicing or replacement of parts must only be carried out by CORGI registered personnel.
4. Ensure that the boiler controls and room thermostat (if fitted) are set to the User's requirements.
5. Tell the User about the sealed system pressure.
6. Tell the User that if the electrical supply is on and the boiler has not operated for 24 hours for heating or hot water, the pump will automatically operate for 5 minutes.
7. Explain to the User that an internal frost thermostat is fitted in the boiler, and that the electrical supply to the boiler must be left on for the thermostat to operate.
8. Show the User the position of the pressure relief valve discharge pipe.
9. Hand the User's instructions and the Benchmark Log Book to the User.
10. Leave these Installation and Servicing instructions with the User for use on future calls.
11. Inform the User that the boiler bottom tray has the facility to store the instructions and log book.

6 BOILER OPERATION

The boiler operating mode is controlled by the selector switch on the facia panel. When set to , the boiler will only operate in the Domestic Hot Water mode. When set to , it will operate in the Domestic Hot Water and Central Heating mode.
Note: The clock (if fitted) only controls the operating times of the central heating, not domestic hot water - DHW is available continuously.
Domestic hot water supply always takes priority over central heating. If a demand for hot water is required during a central heating period, the boiler will automatically switch to the hot water mode until the demand is satisfied. This interruption in the central heating is only when the demand for hot water is present and should not be noticed by the User.

6.1 CENTRAL HEATING MODE

If there is a call for heat, the pump will start to circulate the central heating water. The fan will run at full speed; once the air pressure switch is proved the burner will light. The burner output then automatically adjusts to suit the system demand; as the temperature of the water in the boiler approaches that set by the adjustable temperature selector, the burner output is reduced. When the set temperature is reached, the burner is turned off. The fan continues to run for 20 seconds and the pump continues to run for three minutes to remove residual heat build up in the boiler before allowing the burner to relight. If the CH sensor has not registered the pre-set temperature but the room thermostat is satisfied the burner is turned off. The fan continues to run for 20 seconds and the pump continues to run for 30 seconds. In this instance there is no 3 minute delay before the burner will relight.

If there is a demand for DHW during the 3 minute burner delay, the boiler will operate to provide DHW until the tap is closed; the boiler will then immediately revert to provide CH if there is a demand.

Note: If the system pressure is very low, the primary pressure switch will prevent the boiler from operating.

6.2 DOMESTIC HOT WATER MODE

When a demand for hot water (by opening a hot tap, etc.) is sensed by the flow switch, the pump starts and the burner lights at its middle output, increasing immediately to its maximum output. Water in the boiler is then diverted from the central heating system to the domestic hot water heat exchanger, heating the incoming mains water. The burner output is varied to maintain the temperature of the hot water as that set by the adjustable temperature selector. When the flow switch senses that hot water is no longer required the burner is turned off and the boiler immediately returns to the central heating mode.

In both modes the fan operates at full speed before the burner lights, remaining at that speed until the demand is satisfied.

When the burner is turned off, the fan will continue to run for 20 seconds and the pump will stop immediately if the selector is set for hot water only.

6.3 FROST THERMOSTAT

The boiler incorporates a built in frost thermostat which automatically turns on the boiler and pump if the water in the boiler falls below 8°C, providing the electrical supply is on. The boiler will operate until the water temperature in the system reaches approximately 40°C.

6.4 PUMP

If the electrical supply is on and the boiler has not operated for 24 hours for heating or hot water, the pump will operate automatically for five minutes every 24 hours.

6.5 INDICATOR NEONS

When neon A (red) and neon B (yellow) are illuminated, the following conditions apply:-

Neon	
B	Flashing very slowly (every 5 seconds) - Electricity supply to the boiler is on.
B	Illuminated continuously - Indicates the burner is alight.
B	Flashing on and off - Temperature sensor fault.
A	Flashing on and off - Overheat thermostat has operated. Rotate selector switch to the reset position (3) to reset.
A	Illuminated continuously - Burner has failed to light. Rotate the selector switch to the reset position (3) and the ignition sequence will restart after a delay of about 30 seconds.
A and **B**	Flashing on and off at the same time - Blocked flue or fan fault.
A and **B**	Flashing on and off alternatively - System pressure is very low and re-pressurisation is required.

7 ROUTINE SERVICING

To ensure efficient operation of the boiler it is recommended that it is checked and serviced as necessary at regular intervals. The frequency of servicing will depend upon the particular installation conditions and usage, but in general once per year should be adequate.

It is the law that any service work must be carried out by a competent person, i.e. CORGI registered personnel.

Warning: Before servicing the boiler, isolate the electrical supply and close the boiler gas service cock. Allow the boiler to cool.

The data label is positioned on the inside of the left hand side panel.

Always test for gas soundness after servicing any gas carrying components.

7.1 IMPORTANT NOTES PRIOR TO SERVICING

1. Check the flue terminal outside and ensure it is not blocked.
2. Run the boiler and check the operation of its controls.
3. Refer to Fig. 2 for location of flue sampling point.
4. Ensure that all system connections and fittings are sound. Remake any joints and check the tightness of any fittings that may be leaking.
5. It is recommended that the operation of the safety valve is checked by turning the head anti-clockwise until it clicks. The click is the safety valve lifting off its seat allowing water to escape from the system - check that this is actually happening.
6. Refill, vent and re-pressurise the system as necessary. (Refer to Commissioning, section 5.1).
   If the system pressure exceeds 2.5 bar when operating at maximum temperature, the heating expansion vessel should be checked and re-pressurised, if necessary.
   Note: 1. Check the expansion vessel charge only when the system pressure is zero.
   2. The expansion vessel pressure test point is accessible from the top and rear of the boiler.
7. Record details of the service in the Service History section on page 34 of this manual and in the Benchmark Log Book.

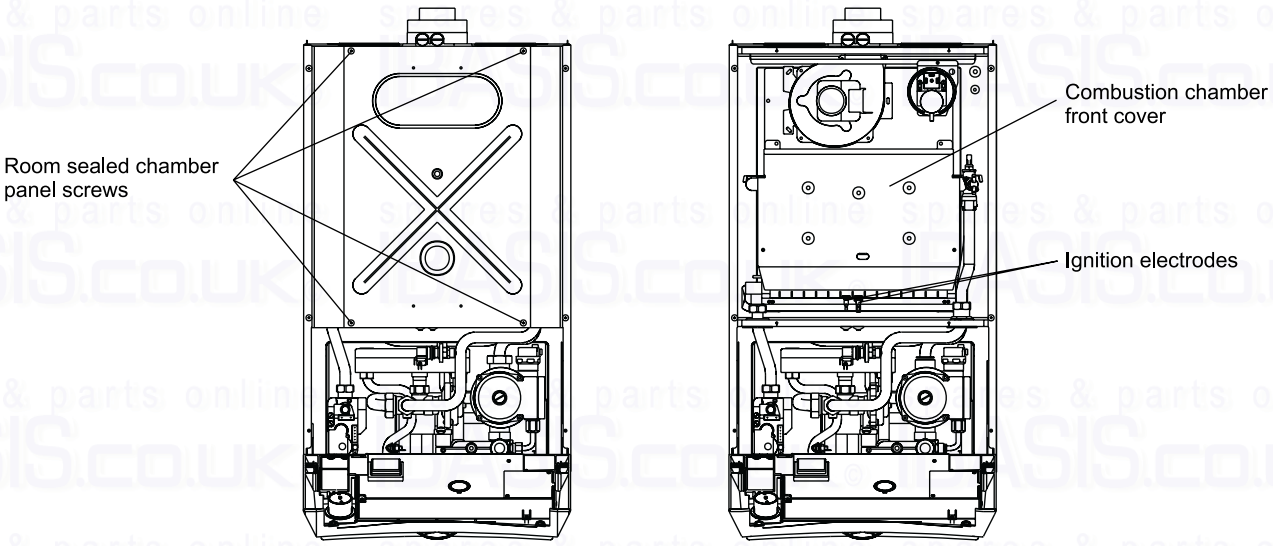

Fig. 18

7.2 PREPARE FOR SERVICING - Fig. 18

1. Ensure the electrical supply is isolated and the gas supply is off.
2. Unscrew the two screws securing the control panel and lower the panel.
3. Lift the case front panel upwards slightly and pull it forwards to remove it from the boiler.
4. Remove the four screws securing the room sealed chamber panel and remove the panel, taking care not to damage the seal.
5. Remove the four screws securing the combustion chamber front cover and remove the cover.
6. Disconnect the electrode leads from the electrodes and the in-line connector to the flame sensing electrode.
7. Remove the four screws securing the burner and withdraw it out of the boiler. Take care not to damage the side insulation panels.

7.3 CLEANING THE BOILER

1. Remove any deposits from heat exchanger using a suitable soft brush. Do not use a brush with metallic bristles.
2. Check the condition of the combustion chamber insulation panels. Any damaged panels must be replaced. (Refer to Component Replacement, section 8.23).
3. Check the condition of the burner injectors on the manifold, carefully clean them with a soft brush if necessary. Do not use a brush with metallic bristles as this might damage the injectors.
4. Remove any fallen deposits from the bottom of the inner case.
5. Unscrew and replace any injector that appears damaged.
6. Clean the top of the burner with a soft brush and check that the flame ports are clear. Blockages may be removed with a stiffer brush. Tap the burner, open end down, to remove any deposits from inside.
7. Check the condition of the electrodes.
9. Check the spark gap, positioning and height of the electrodes (see Fig. 19).
10. Check that the fan impeller is clean and free to rotate.

7.4 RE-ASSEMBLE THE BOILER

1. Replace the burner, ensuring it is located correctly and secure it in position using the four screws previously removed.
2. Replace the combustion chamber front cover, ensuring it is correctly located.
3. Ensure the electrode leads are connected and the seals are in position in the bottom of the inner case.
4. Test the connections for gas soundness and check the burner pressures. (Refer to Commissioning, sections 5.4 and 5.5).
5. Ensure that the room sealed chamber panel seal is intact and in position, replace the panel ensuring it has been located correctly (especially on the sides) and secure it in position with the screws previously removed.
6. Place the front case panel in position as shown in Fig. 18 and secure in position.
7. Raise the control panel and secure in position with the two screws provided.
8. Check the operation of the boiler. (Refer to Boiler Operation, section 6).
9. Return all controls to their original settings.

8 COMPONENT REPLACEMENT

It is the law that any service work must be carried out by a competent person, i.e. CORGI registered personnel.

Warning: Before replacing any boiler components, isolate the electrical supply and close the boiler gas service cock. Allow the boiler to cool.

Always test for gas soundness after replacing any gas carrying components or disturbing any gas connections.

Check the operation of the boiler. (Refer to Boiler Operation, section 6).

Ensure that all the controls are returned to their original settings.

The replacement of components in sections 8.3 to 8.15 does not require draining of the boiler.

8.1 GENERAL ACCESS - Fig. 18

Ensure the electrical supply is isolated and the gas supply is off.

1. **If access is required behind the control panel -** Release the two fixing screws (one each side) securing the control panel and lower the panel.
2. **To gain access behind the casing -** Lift the case front panel upwards slightly and pull it forwards to remove it from the boiler (see Fig. 18). If required, remove the side panels by removing the bottom fixing screw and lifting forwards and upwards.
3. **To gain access to the combustion chamber -** Remove the four screws securing the room sealed chamber panel and remove the panel, taking care not to damage the seal.
   Note: When replacing the panel, ensure the seal is intact and that the panel has been located correctly, especially on the sides.
4. **To gain access to the control panel components -** Remove the five screws securing the rear cover and carefully raise the cover from the front. When replacing the cover, ensure no wires are trapped and all wiring is secured. Secure with five screws - do not overtighten.

8.2 DRAINING THE BOILER - Refer to Figs. 2 or 11

Isolate the electricity supply and close the boiler gas service cock (see Fig. 11). Allow the boiler to cool.

1. **Heating circuit**
   Close the central heating flow and return valves (see Fig. 11).
   Connect a suitable pipe to the drain point (see Fig. 2) and route it to a suitable container. Open the drain point.
2. **Hot water circuit**
   Close the mains water inlet valve (see Fig. 11).
   Open any hot tap below the level of the boiler to allow as much draining as possible.

Note: Some water will remain in the components and care must be taken when removing them.

8.3 IGNITION ELECTRODE LEAD - Refer to Fig. 22

1. Gain access to the combustion chamber as in section 8.1.
2. Disconnect the lead from the electrode.
3. Disconnect the lead from the PCB, noting its position (see Fig. 22).
4. Fit the new lead ensuring it passes through the locations in the control panel and grommets in the base of the combustion chamber.
5. Re-assemble in reverse order.

8.4 ELECTRODES - Fig. 19

Gain access to the combustion chamber as in section 8.1.

1. Remove the four screws securing the combustion chamber front cover and remove the cover.
2. Disconnect the leads from the electrodes. Remove the grommet in the bottom of the chamber, disconnect the flame sensing electrode in-line connector and withdraw the lead.
3. Withdraw the main burner out of the boiler. Take care not to damage the side insulation panels.
4. **Flame sensing electrode**
   Remove the screw securing the electrode and withdraw the electrode.
   Fit the new electrode, ensuring it is positioned correctly (see Fig. 19).
   Note: Fit the in-line connector to the lead by pushing it into the connector after the burner has been fitted.
5. **Ignition electrodes**
   Remove the screw securing the electrode and withdraw the electrode.
   Fit the new electrode, ensuring both are positioned correctly and the spark gap is correct (see Fig. 19).

Re-assemble

1. Replace the burner, ensuring it is located correctly.
2. Replace the combustion chamber front cover, ensuring it is correctly located.
3. Complete re-assembly as described in Routine Servicing, section 7.4 paragraphs 4 to 9.

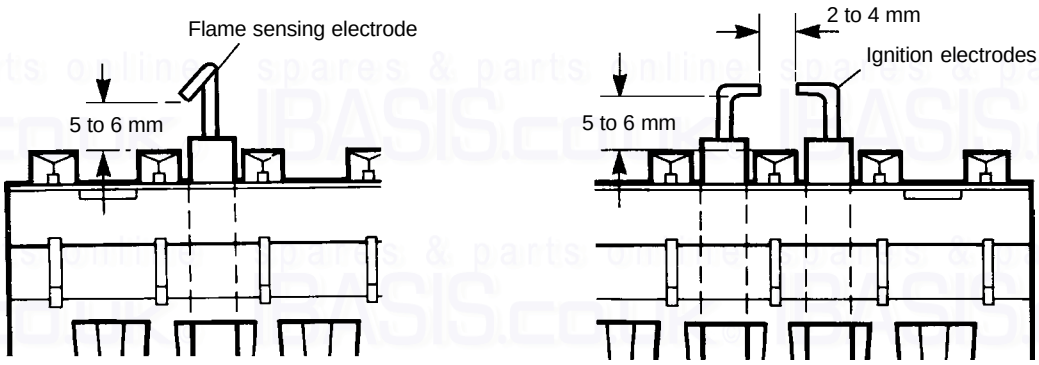

Fig. 19

8.5 MAIN BURNER

1. Remove the burner as described in Routine Servicing, section 7.2.
2. Re-assemble with a new burner as described in Routine Servicing, section 7.4.

8.6 BURNER INJECTORS

1. Remove the burner as described in Routine Servicing, section 7.2.
2. Unscrew the damaged injector and screw in a replacement.
3. Re-assemble as described in Routine Servicing, section 7.4.

8.7 FAN - Fig. 20

1. Gain access to the combustion chamber as in section 8.1.
2. Disconnect the fan wiring.
3. Remove the three screws securing the fan to the flue hood. Fit the new fan and re-assemble in reverse order.
   Note: Connect the fan wiring, blue to terminal N, brown to terminal L and green/yellow to terminal ⏚.
4. Re-assemble and test the boiler as described in Routine Servicing, section 7.4 paragraphs 5 to 9.

8.8 AIR PRESSURE SWITCH - Fig. 20

1. Gain access to the combustion chamber as in section 8.1.
2. Disconnect the pressure sensing tube.
3. Remove the fixing screw and disconnect the wiring.
4. Connect the wiring to the new switch. The polarity of the wires is not important.
5. Secure the new switch in position and connect the pressure sensing tube to the connection nearest the front.
6. Re-assemble in reverse order.

8.9 OVERHEAT THERMOSTAT - Fig. 20

1. Gain access to the combustion chamber as in section 8.1.
2. Disconnect the wiring from the overheat thermostat.
3. Remove the two fixing screws and remove the overheat thermostat from the heat exchanger.
4. Fit the new overheat thermostat and re-assemble in reverse order.

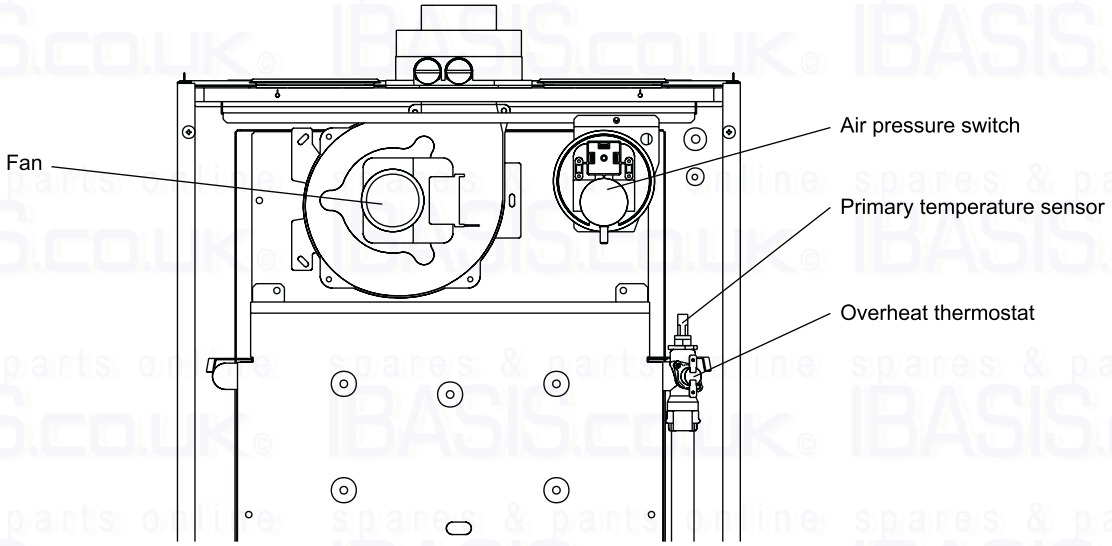

Fig. 20

8.10 GAS VALVE - Fig. 21

1. Gain access behind the casing as in section 8.1.
2. Disconnect the coil wires and pressure tube from the gas valve.
3. Loosen the one screw (see Fig. 21) securing the electrical plug and disconnect the plug.
4. Disconnect the burner manifold union and the gas inlet pipe union from the manifold.
5. Remove the two manifold screws from beneath the boiler.
6. Carefully push the valve towards the rear of the boiler (take care not to damage the manifold sealing washer) and lift out the valve assembly.
7. Fit the new assembly and re-assemble in reverse order.
8. Light the boiler and test for gas soundness. (Refer to Commissioning, section 5.4).
9. Complete re-assembly as described in Routine Servicing, section 7.4 paragraphs 5 to 9.

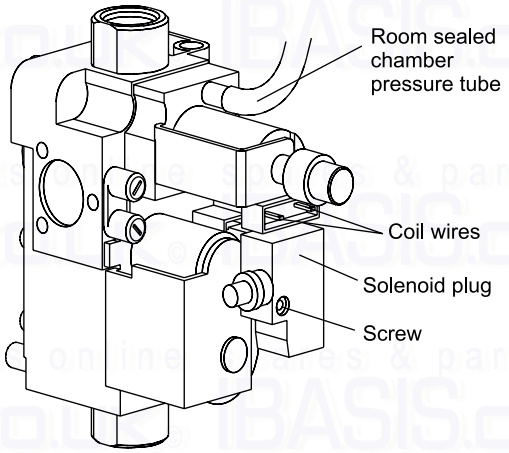

Fig. 21

8.11 VIEWING WINDOW

1. Gain access behind the casing as in section 8.1.
2. Remove the rubber window frame and remove the damaged glass.
3. Re-assemble in reverse order with a new glass. Ensure the rubber frame is located correctly in the front panel.

8.12 INTERNAL FUSE - Refer to Fig. 14

The fuse is located in the boiler terminal block.

1. Gain access as described in Installation, section 4.8.
2. Lift out the fuse holder and remove the fuse. Fit a fast blow 2 A fuse as a replacement, ensuring that the holder snaps into position.
3. Re-assemble in reverse order, ensuring the terminal block is located correctly on the plastic pins.

8.13 PCB - Fig. 22

1. Gain access behind the control panel as described in section 8.1.
2. Disconnect all the wiring connectors from the PCB.
3. Remove the five fixing screws and carefully withdraw the board from the switch spindles.
4. Re-assemble in reverse order. Refer to the wiring diagram in section 9.1 for connections.

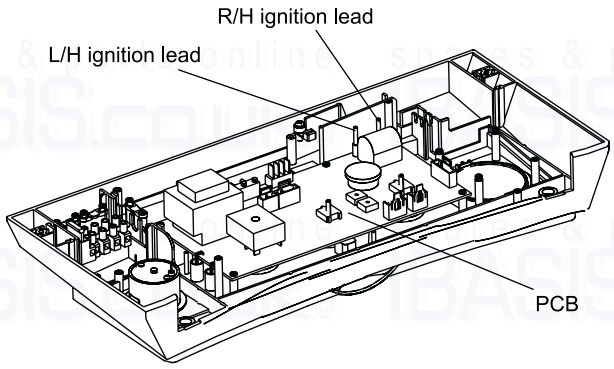

Fig. 22

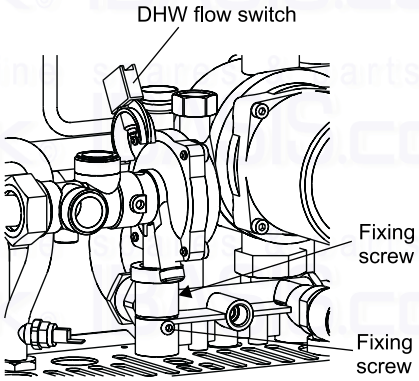

Fig. 23

8.14 DHW FLOW SWITCH - Fig. 23

1. Gain access behind the casing as described in section 8.1.
2. Remove the switch from the diverter valve by pulling or prising it upwards from the valve body. Disconnect the inline wiring connector. Re-assemble in reverse order with a new switch. Ensure that the switch is located correctly.

8.15 CLOCK (if fitted) - Refer to Fig. 15

1. Gain access behind the control panel as described in section 8.1.
2. Remove the two screws securing the clock cover at the rear of the control panel.
3. Disconnect the wiring from the clock.
4. Remove the clock retaining screws and withdraw the clock from the control panel.
5. Fit the new clock, and connect the wires as follows:-
   Blue to terminal 1, Brown to terminal 2 and Red wires to terminals 3 and 4, (or as per the instructions supplied with the clock).
6. Re-assemble in reverse order. Refer to the User's instructions and the boiler's control cover to set the clock.

8.16 PRIMARY HEAT EXCHANGER

1. Gain access to the combustion chamber and drain the boiler heating circuit as described in sections 8.1 and 8.2.
2. Remove the four screws securing the combustion chamber front cover and remove the cover.
3. Remove the overheat thermostat (section 8.9) and the CH temperature sensor (section 8.19).
4. Remove the right hand side baffle plate by lifting it up.
5. Disconnect the two unions from the heat exchanger flow and return pipes.
6. Lift up the heat exchanger off the pipes and remove it by carefully withdrawing it out of the boiler.
7. Carefully prise off the two clips and remove the flow and return pipes from the heat exchanger.
8. Fit the flow and return pipes to the new heat exchanger, ensuring the new 'O' rings are in position in the flanges.
   Lubricating the 'O' rings with a soap solution will aid assembly. Ensure the heat exchanger is correctly located.
9. Re-assemble in reverse order.
10. Refill and pressurise the system. (Refer to Commissioning, section 5.1).

8.17 COMBUSTION CHAMBER INSULATION

1. Gain access to the combustion chamber as described in section 8.1.
2. The front panel slides out.
3. To replace the rear and side panels remove the heat exchanger as described in section 8.16. Prise out the top of the rear insulation panel and lift it up and out of the boiler, then slide out the side insulation panels.
4. Fit a new panel and re-assemble in reverse order.
5. Refill and pressurise the system. (Refer to Commissioning, section 5.1).

8.18 PRESSURE GAUGE - Fig. 24

1. Gain access behind the casing and drain the boiler heating circuit as described in sections 8.1 and 8.2.
2. Remove the nut securing the pressure gauge sensor and withdraw the sensor.
3. Depress the two lugs on the pressure gauge and push it out of the control panel.
4. Fit the new gauge using a new washer on the diverter valve connection if necessary.
5. Refill and pressurise the system. (Refer to Commissioning, section 5.1).

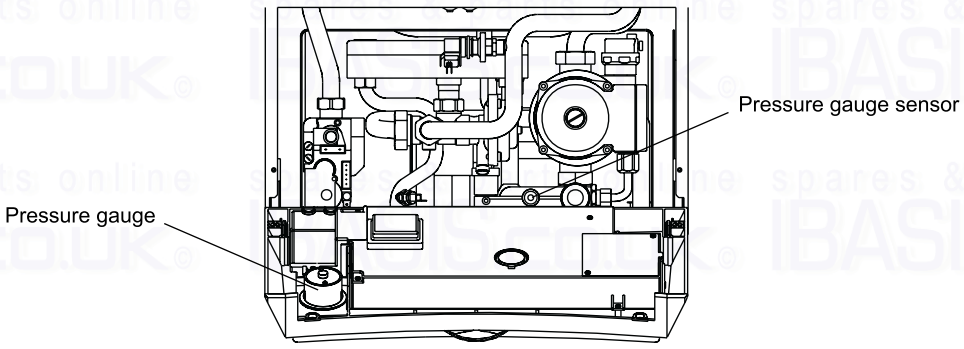

Fig. 24

8.19 TEMPERATURE SENSORS - Figs. 20 or 25

Note that both sensors are the same.

1. Gain access as described in section 8.1 (behind the casing for the DHW sensor or to the combustion chamber for the primary temperature sensor) and drain (heating circuit for primary sensor or hot water circuit for DHW sensor) as described in section 8.2.
2. **Primary Sensor -** The primary sensor is positioned on the right hand side of the heat exchanger, see Fig. 20. Disconnect the two red wires and unscrew the sensor. Re-assemble in reverse order with a new sensor and sealing washer.

2a. **DHW Sensor (N/A to 24X/28X) -** Close the mains cold water inlet valve and open the lowest hot water tap to drain the DHW system. Disconnect the wiring and unscrew the sensor, see Fig 25. Re-assemble in reverse order with a new sensor, replacing the sealing washer if necessary.

8.20 AUTOMATIC AIR VENT - Fig. 25

1. Gain access behind the casing and drain the boiler heating circuit as described in sections 8.1 and 8.2.
2. Unscrew the automatic air vent from the pump outlet. Fit a new one using a new 'O' ring.
3. Refill and pressurise the system. (Refer to Commissioning, section 5.1).

8.21 PUMP - Refer to Fig. 25

Gain access behind the casing and drain the boiler heating circuit as described in sections 8.1 and 8.2.

Pump head

1. Remove the four socket head screws securing the pump head to the body. Withdraw the head, remove the wiring cover and disconnect the wiring.
2. Connect the wiring to the new head as follows:-
   Brown to L, Blue to N, Green/yellow to ⏚.
   Ensure the pump is set to maximum (3) and re-assemble in reverse order.
3. Refill and pressurise the system. (Refer to Commissioning, section 5.1).

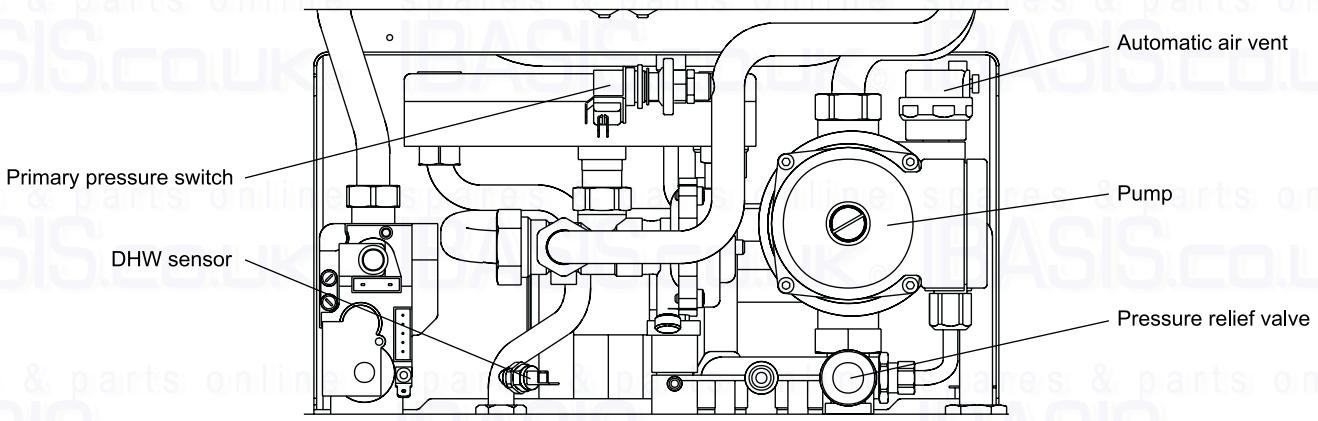

Fig. 25

Complete pump

1. Remove the pump head as described above.
2. Unscrew the automatic air vent from the pump outlet.
3. Disconnect the pump unions and withdraw the pump body.
4. Connect the wiring as described above, ensure that pump is set to maximum and re-assemble using new sealing washers.
5. Refill and pressurise the system. (Refer to Commissioning, section 5.1).

8.22 PRIMARY PRESSURE SWITCH - Fig. 25

1. Gain access behind the casing and drain the boiler heating circuit as described in sections 8.1 and 8.2.
2. Disconnect the wiring from the pressure switch.
3. Unscrew the switch from the primary flow pipe.
4. Using the new washer supplied, re-assemble in reverse order.
   When connecting the wiring to the new switch the polarity of the wires is not important.

8.23 PRESSURE RELIEF VALVE - Fig. 25

1. Gain access behind the casing and drain the boiler heating circuit as described in sections 8.1 and 8.2.
2. Remove the four screws securing the bottom tray and remove the tray. Disconnect the pressure relief valve outlet fitting.
3. Release the screw retaining the pressure relief valve and pull out the valve.
4. Re-assemble in reverse order.
5. Refill and pressurise the system. (Refer to Commissioning, section 5.1).

8.24 DHW HEAT EXCHANGER - Refer to Fig. 26

1. Gain access behind the casing and drain the boiler heating and hot water circuits as described in sections 8.1 and 8.2.
2. Disconnect the three union nuts to the heat exchanger and remove heat exchanger by lifting it upwards from the rear right hand side 'O' ring seal connection.
   Note: Be careful not to allow water to drip onto any electrical components.
3. Using the new washers supplied, re-assemble in reverse order.
4. Refill and pressurise the system. (Refer to Commissioning, section 5.1).

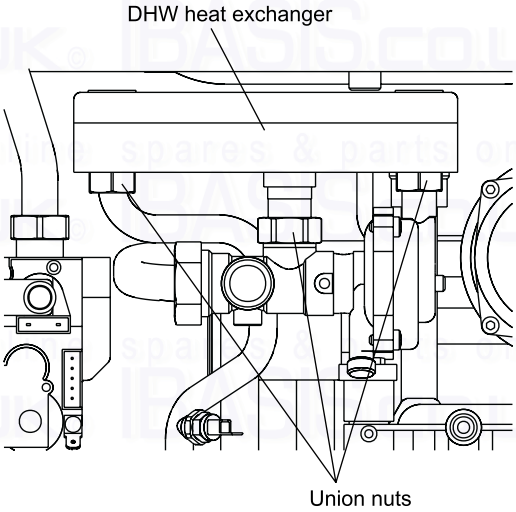

Fig. 26

8.25 MAINS WATER INLET FILTER - Fig. 11

1. Drain the boiler hot water circuit as described in section 8.2. Remove the four screws securing the bottom tray and remove the tray.
2. Withdraw the filter after disconnecting the unions between the inlet valve and boiler for the CB24X/28X boiler (item H in Fig. 11) or the union from the inlet of the seasonality valve on the CB24/28.
3. Clean or replace and re-assemble in reverse order.

8.26 DIVERTER VALVE ASSEMBLY - Figs. 23 and 27

1. Gain access behind the casing and drain the boiler heating and hot water circuits as described in sections 8.1 and 8.2.
2. Remove the domestic hot water heat exchanger and flow switch assemblies from the diverter valve as described in sections 8.22 and 8.14.
3. Disconnect the union connections from the diverter valve.
4. Release the screws shown in Fig. 23 and raise the valve slightly to disengage it from the manifold, then lift it out of the boiler.
5. Re-assemble in reverse order using the new seals supplied.
6. Refill and pressurise the system. (Refer to Commissioning, section 5.1).

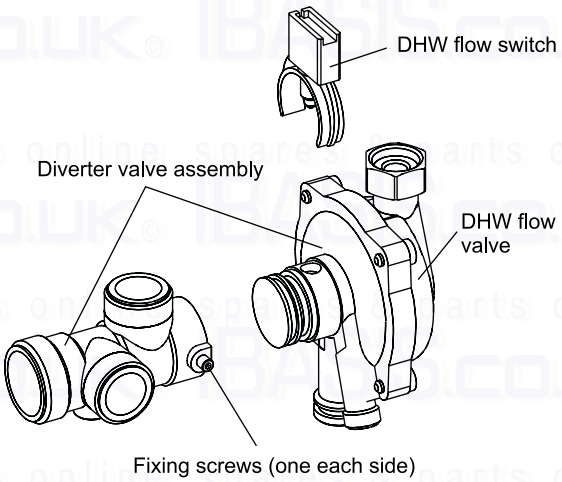

Fig. 27

8.27 DHW FLOW VALVE - Fig. 27

1. Remove the diverter valve as described in section 8.26.
2. Unscrew (not necessary to remove) the two screws securing the DHW flow valve to the diverter valve and withdraw the valve.
3. When re-assembling, push the new valve into position, holding it in, while tightening the fixing screws.
4. Re-assemble in reverse order.

8.28 EXPANSION VESSEL

Note: If there is less than 450 mm clearance above the boiler or a rear exit flue is used, it is not possible to replace the vessel, in which case an additional vessel should be fitted external to the boiler in the central heating return pipe, as close to the boiler as possible (see Fig. 5).

1. Gain access behind the casing and drain the boiler heating circuit as described in sections 8.1 and 8.2.
2. Disconnect the pipe from the pump inlet manifold and expansion vessel.
3. Remove the two screws securing the top support plate.
4. Lift the expansion vessel out of the boiler.
5. When replacing the vessel, ensure that the connection is towards the front of the boiler and re-assemble in reverse order using new seals as necessary.
6. Refill and pressurise the system. (Refer to Commissioning, section 5.1).

8.29 SEASONALITY VALVE (N/A to CB24X/28X) - Fig. 11

1. Drain the boiler hot water circuit as described in section 8.2. Remove the four screws securing the bottom tray and remove the tray.
2. Remove the valve by disconnecting the unions from the bottom of the boiler, the mains inlet valve and filling loop.
3. Re-assemble in reverse order using a new valve.

8.30 CYCLONE (N/A to CB24X/28X) - Fig. 11

1. Gain access behind the casing and drain the boiler heating circuit as described in sections 8.1 and 8.2.
2. Disconnect the unions from the cyclone and re-assemble with a new cyclone.
3. Pressurise the system. (Refer to Commissioning, section 5.1).

9 WIRING DIAGRAMS

9.1 ILLUSTRATED WIRING DIAGRAM

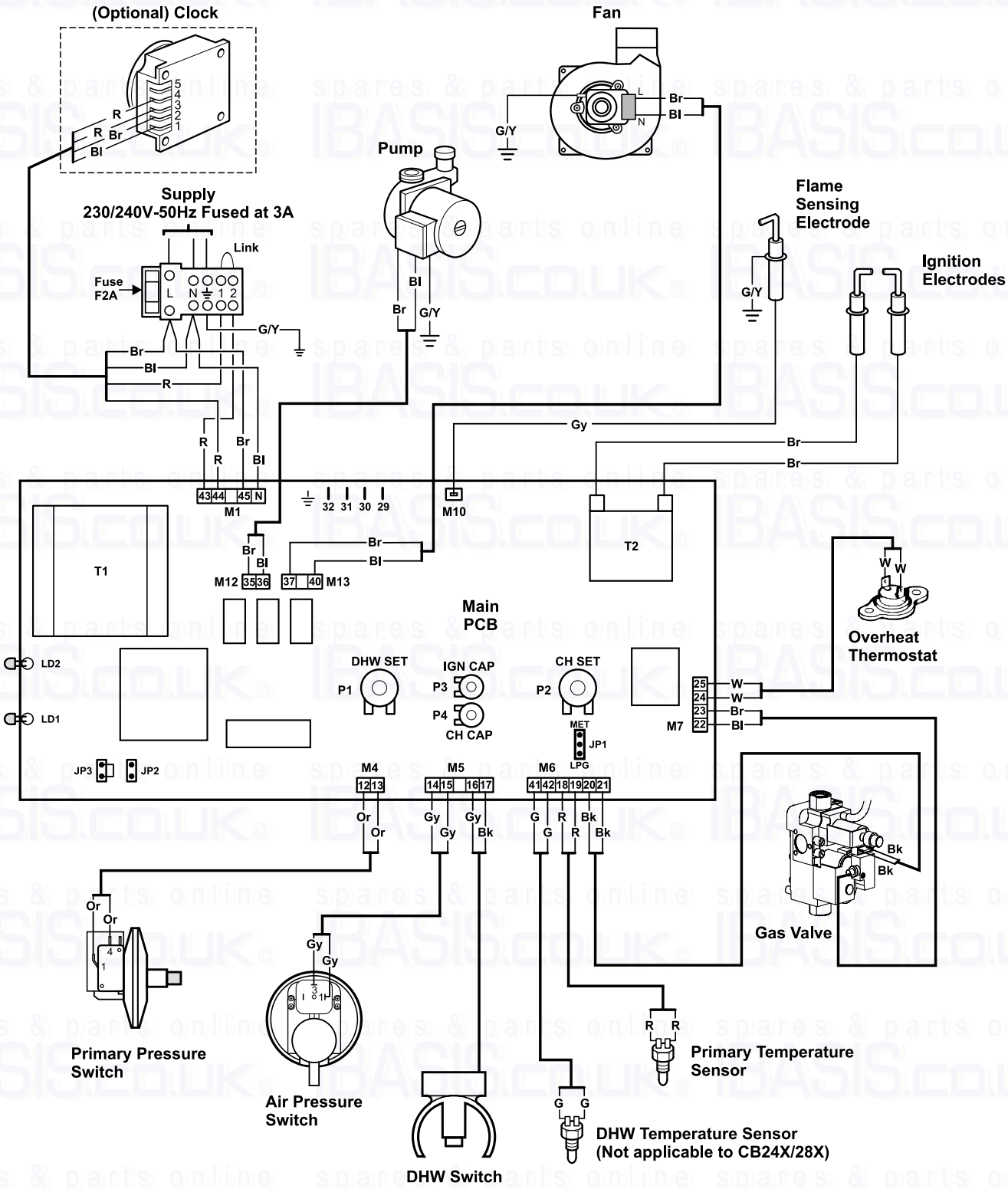

Br - Brown
Bk - Black
Bl - Blue
R - Red
Or - Orange
G - Green
G/Y - Green/Yellow
W - White
Gy - Grey

NOTE: REMOVE LINK FROM TERMINALS 1 & 2 TO CONNECT EXTERNAL CONTROL (240V SWITCHING)

A FROST THERMOSTAT IS INCORPORATED WITHIN THE MAIN PCB

9.2 FUNCTIONAL FLOW WIRING DIAGRAM

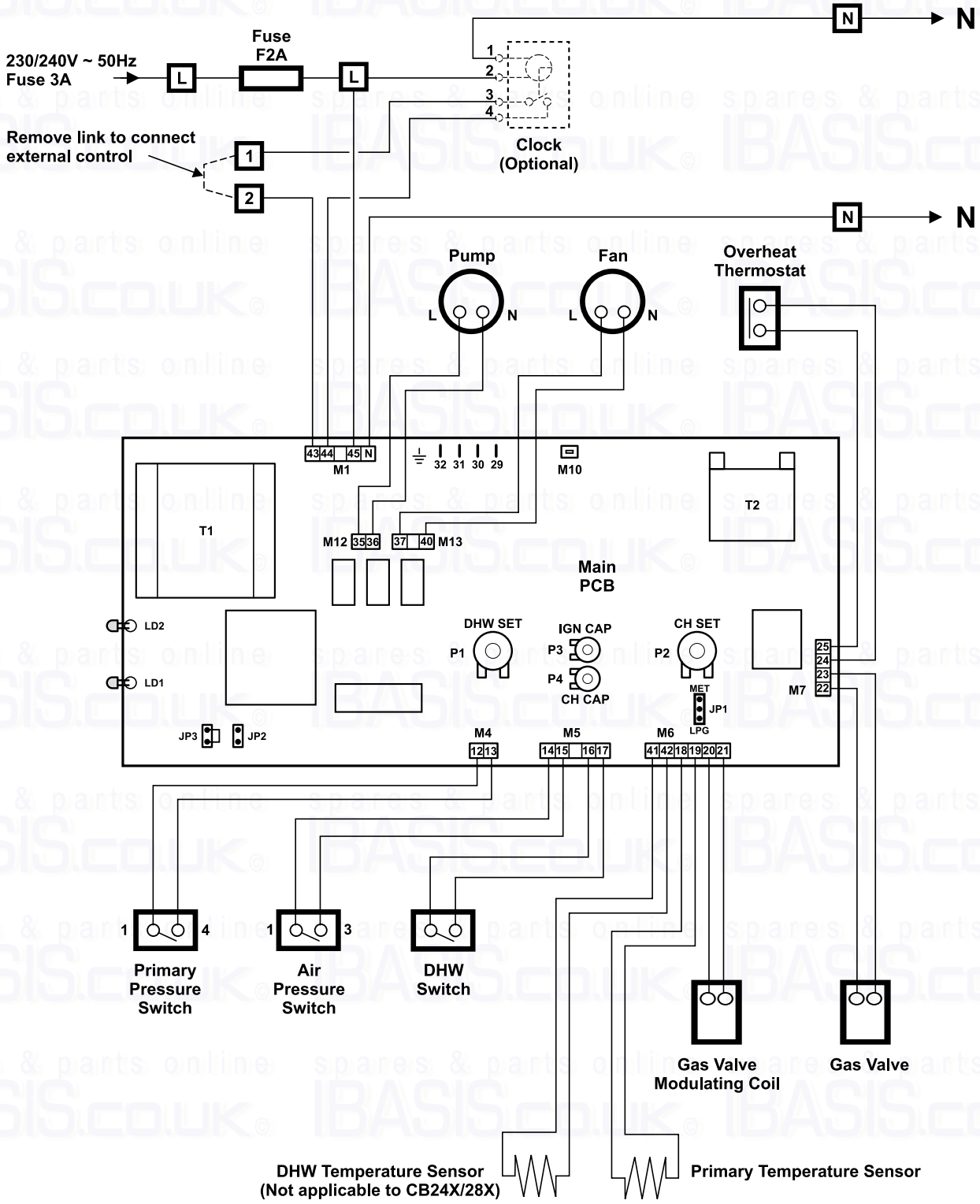

Note: Main Terminal Block

10 FAULT FINDING

10.1 CARRY OUT INITIAL FAULT FINDING CHECKS

1. Check that gas, water and electrical supplies are available at the boiler.
   i.e. Inlet gas pressure = 20 mbar
   Electrical supply = 230/240 V ~ 50 Hz
   CH water system pressurised to between 0.75 and 1.25 bar
   DHW flow rate is more than 2.5 litre/min
2. Carry out electrical system checks, i.e. Earth Continuity, Resistance to Earth, Short Circuit and Polarity with a suitable meter.
   Note: These checks must be repeated after any servicing or fault finding.
3. Ensure all external controls are calling for heat and check all external and internal fuses.
4. Check that the gas and water pipework has been connected to the correct connections on the boiler.

Before any servicing or replacement of parts ensure the gas and electrical supplies are isolated.

10.2 CENTRAL HEATING - Follow operational sequence

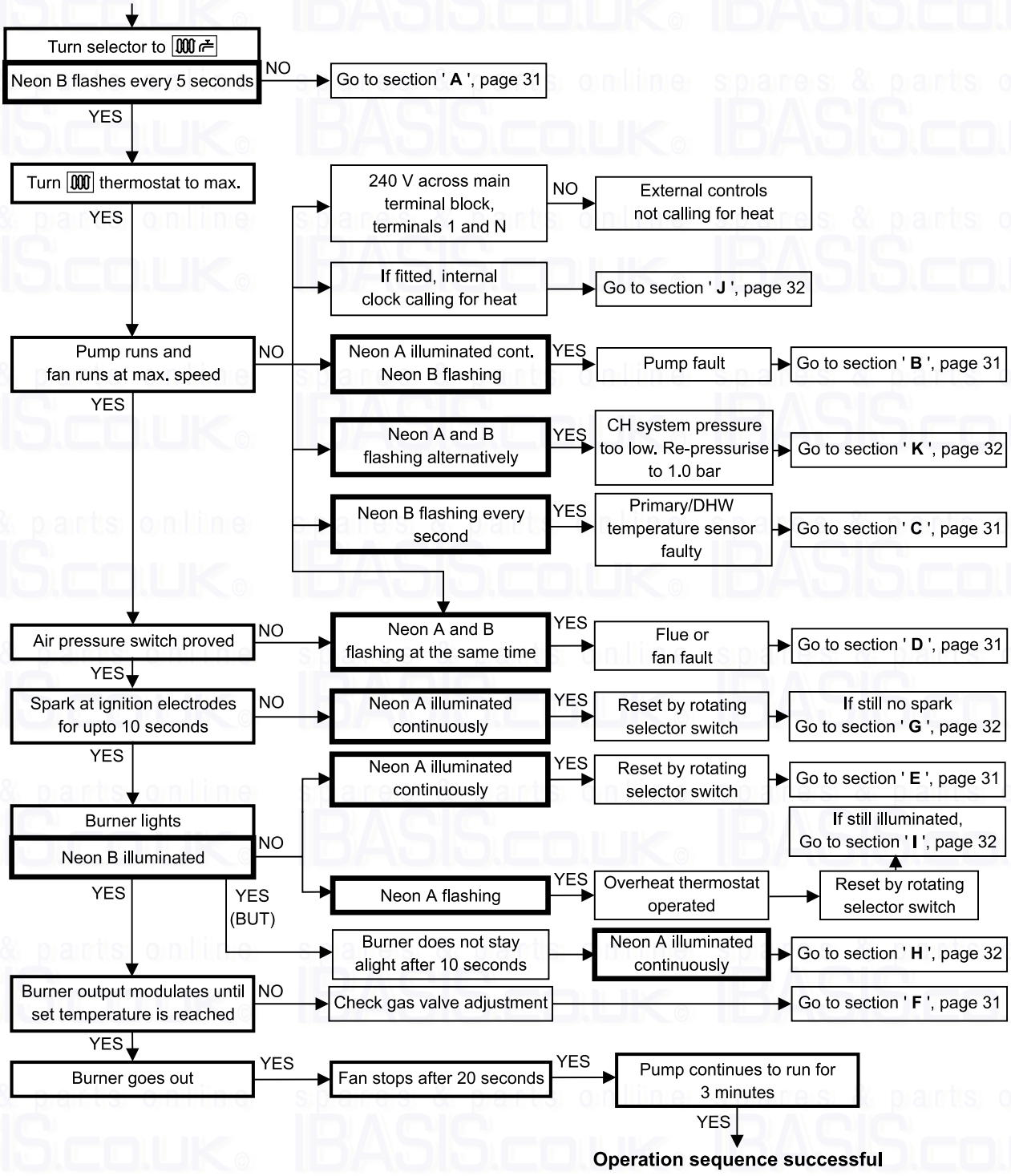

10.3 DOMESTIC HOT WATER - Follow operational sequence

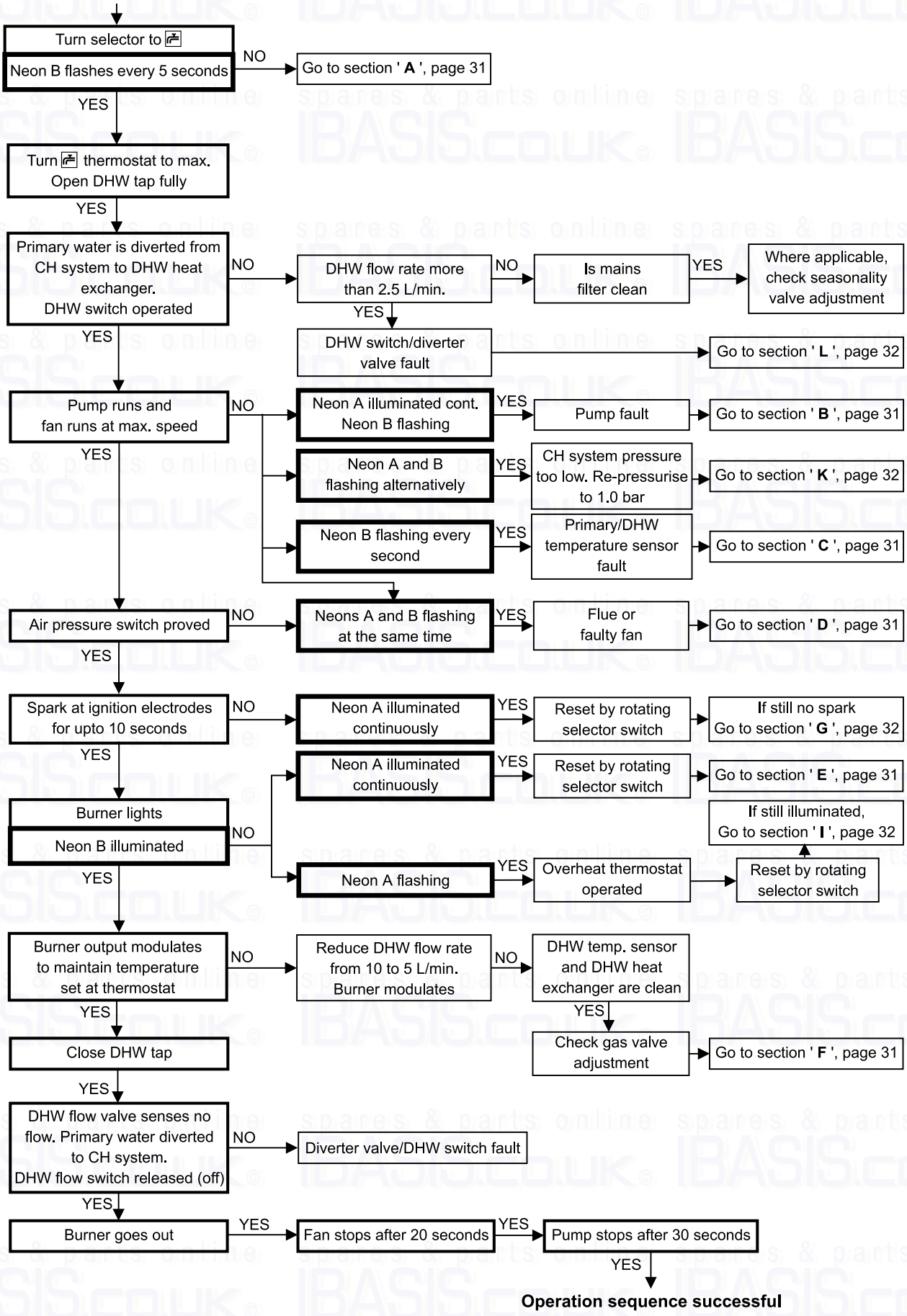

10.4 FAULT FINDING SOLUTIONS A to E

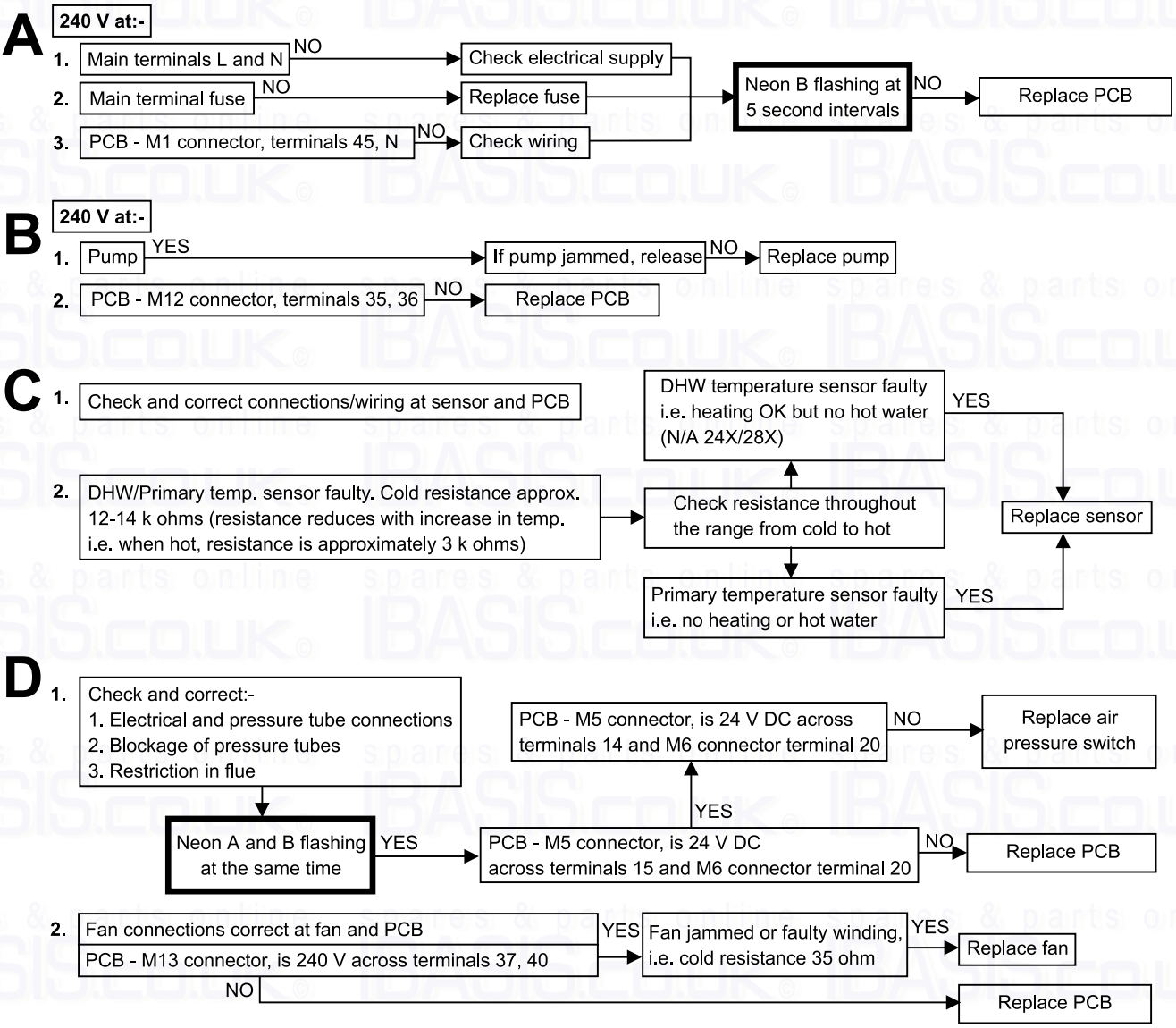

10.5 FAULT FINDING SOLUTION SECTIONS F to J

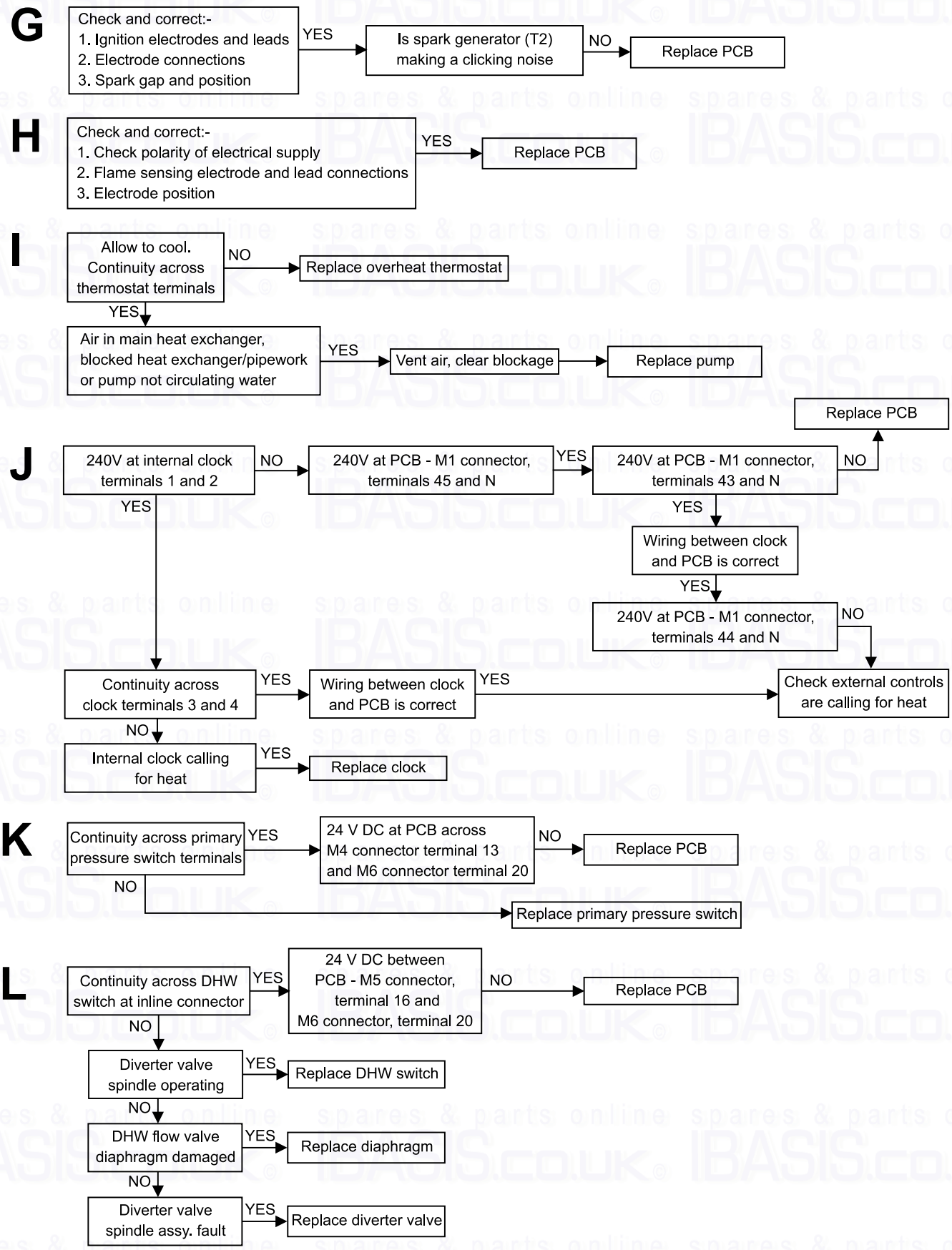

11 SHORT PARTS LIST

Reference	Description	Qty.	Alpha Pt. No.	British Gas GC No.
Fig. 2, item 7	Burner assembly (CB24, CB24X)	1	1.015368	E57-720
Fig. 2, item 7	Burner assembly (CB28, CB28X)	1	1.015370	E57-732
	Main injector 1.30 mm (CB24, CB24X)	12	1.4270	E57-733
	Main injector 1.30 mm (CB28, CB28X)	14	1.4270	E57-734
Fig. 2, item 8	Primary heat exchanger (CB24, CB24X)	1	1.014805	E57-736
Fig. 2, item 8	Primary heat exchanger (CB28, CB28X)	1	1.015389	E57-737
Fig. 2, item 6	DHW heat exchanger (CB24, CB24X)	1	1.015957	E57-739
Fig. 2, item 6	DHW heat exchanger (CB28, CB28X)	1	1.015958	E57-740
Fig. 21	Gas valve - Honeywell VK4105M5009	1	1.015803	E57-665
Fig. 25	Pump	1	1.015610	E57-666
Fig. 20	Fan assembly	1	1.017264	E57-667
Fig. 20	Air pressure switch	1	1.8396	E57-668
Fig. 25	Primary pressure switch	1	1.017496	E57-669
Fig. 2, item 1	Seasonality valve (CB24, CB28)	1	3.012800	E57-745
Fig. 2, item 1	DHW flow regulator (CB24X, 28X)	1	1.011128	E57-750
Fig. 23	DHW flow switch	1	3.013211	E57-751
Fig. 22	PCB	1	1.017118	E57-670
Figs. 20, 25	Temperature sensor	2	1.015970	E57-754
Fig. 14	Fuse F2A	1	1.6058	E57-698
Fig. 20	Overheat thermostat	1	1.015673	E57-700
Fig. 2, item 14	Expansion vessel 8 Litre	1	1.015394	E57-702
Fig. 25	Pressure relief valve 3 bar	1	1.011126	E57-703
Fig. 25	Automatic air vent	1	1.010771	E57-709
Fig. 24	Pressure gauge	1	1.016151	E57-710
Fig. 19	Ignition electrode - right	1	1.2408	E57-712
Fig. 19	Ignition electrode - left	1	1.2405	E57-713
Fig. 19	Flame sensing electrode	1	1.010645	E57-714
	Ignition electrode lead	2	3.013212	E57-716
	Flame sensing electrode lead	1	3.013213	E57-717
Fig. 27	Diverter valve assembly	1	3.012752	E57-773
Fig. 2, item 27	By-pass assembly	1	3.012801	E57-774
	Combustion chamber insulation panel set (CB24, CB24X)	1	3.013838	
	Combustion chamber insulation panel set (CB28, CB28X)	1	3.013839	

12 SERVICE HISTORY

DETAILS OF BOILER INSTALLATION

Date of Installation: .....

Name of Installer: .....

Address: .....

.....

.....

.....

Postcode: .....

Telephone No: .....

Boiler Serial Number: .....
(see data label on inside of left hand case panel)

DETAILS OF BOILER SERVICE HISTORY

Date of Service	Details of Service	Service Engineer
.....	.....	.....
	.....	
	.....	
	.....	
.....	.....	.....
	.....	
	.....	
	.....	
.....	.....	.....
	.....	
	.....	
	.....	
.....	.....	.....
	.....	
	.....	
	.....	

spares & parts online IBASIS.CO.UK©

Alpha BOILERS

Alpha Therm Limited.
Goldsel Road, Swanley, Kent BR8 8EX
Tel: (01322) 669443
Fax: (01322) 615017

These instructions have been carefully prepared but we reserve the right to alter the specification at any time in the interest of product improvement.
© Alpha Therm Limited 2001.

Part No. 1.017292

Manual compiled and designed by Publications 2000 - Tel: (01670) 356211

03/01/D135