Installation and Servicing Instructions

Alpha CD13R,18R and 24R

Wall Mounted, Fan Assisted, Room Sealed, Gas Fired, High Efficiency Condensing Regular Boiler Range

For Technical help or for Service call ...
ALPHA HELPLINE Tel: 0870 3001964
website:www.alpha-innovation.co.uk

Alpha
HEATING INNOVATION

Nepicar House, London Road,
Wrotham Heath, Sevenoaks,
Kent TN15 7RS

British Gas
Service Listed

CE

Alpha CD13R	G.C. No. 41 532 05
Alpha CD18R	G.C. No. 41 532 03
Alpha CD24R	G.C. No. 41 532 04

benchmark
COLLECTIVE MARK
THE MARK OF QUALITY FOR THE INSTALLATION, COMMISSIONING AND SERVICING OF DOMESTIC HEATING AND HOT WATER SYSTEMS

For use with Natural Gas only

Leave these instructions with the User

spares & parts online IBASIS.CO.UK

CONTENTS

1 Introduction 2
2 Technical data 3
3 General boiler information 6
4 Installation 12
5 Commissioning 18
6 Boiler operation 20
7 Routine servicing 21
8 Component replacement 23
9 Wiring diagrams 27
10 Fault finding 29
11 Short parts list 32
12 Benchmark Checklist 33
13 Service record 34

1 INTRODUCTION

The Alpha CD Regular range of high efficiency condensing boilers are wall mounted, fan assisted room-sealed boilers. The burner is lit electronically and the heat output is controlled by a modulating fan and gas valve.

The boilers provide heating only for open vented systems and with the addition of a sealed system kit for sealed central heating systems.

The boilers are designed for use with a fully pumped open vented or sealed and pressurised central heating system using only Natural gas.

The boiler CD13R is suitable for central heating loads of between 5.4 and 13.1 kW (18 400 and 44 700 Btu/h).
The boiler CD18R is suitable for central heating loads of between 5.4 and 19.6 kW (18 400 and 66 800 Btu/h).
The boiler CD24R is suitable for central heating loads of between 6.5 and 25.6 kW (22 200 and 87 300 Btu/h).
The boilers are rated to the SEDBUK efficiency band A and have a NOx class 5 rating.

IMPORTANT

It is the law that all gas appliances are installed by a competent person, ie CORGI registered personnel, in accordance with the following recommendations:-

Current Gas Safety (Installation and Use) Regulations

All current Building Regulations issued by the Department of the Environment, i.e. Approved Document L1.

Building Standards (Scotland) (Consolidation) Regulations issued by the Scottish Development Department

Health & Safety Document No. 635 (The Electricity At Work Regulations 1989)

The installation should also be in accordance with the following British Standard Codes of Practice:-

BS 5440:1:2008	Flues
BS 5449:1990	Forced circulation hot water systems
BS 5546:2000	Installation of hot water supplies for domestic purposes
BS 6700:1997	Design, installation, testing and maintenance of services supplying water
BS 6798:2000	Installation of gas fired boilers
BS 6891:1998	Gas installation
BS 7593:2006	Code of Practice for treatment of water in heating systems
BS 7671:2001	Requirements for electrical installations, IEE Wiring Regulations

Reference should also be made to the DEFRA document 'Guide to condensing boiler installation assessment procedure for dwellings'

If installation is in a timber framed building, refer to the Institute of Gas Engineers document IGE/UP/7.

This appliance meets the requirements of IPX4D, ie degree of protection against moisture.

Failure to install this appliance correctly could lead to prosecution. It is in your own interest and that of safety to ensure that the law is complied with.

Manufacturer's instructions must **NOT** be taken in anyway as over-riding statutory obligations.

Notes: 1. Ensure that the Benchmark Checklist has been completed after the boiler has been installed and commissioned.
2. Ensure the appliance has been supplied with an Alpha CD flue system.

2 TECHNICAL DATA

2.1 PERFORMANCE - NATURAL GAS *(CAT: 12H 2H - G20 - 20 mbar)*

Alpha CD13R

Central Heating			MAX.	MIN.
Heat Input (H_s)		kW	13.8	6.2
(Gross)		Btu/h	47 000	21 100
Heat Input (H_i)		kW	12.4	5.6
(Net)		Btu/h	42 300	19 100
Heat Output (H_s condensing)		kW	13.1	5.9
(50°C/30°C)		Btu/h	44 700	20 100
Heat Output (H_i non-condensing)		kW	12.1	5.4
(80°C/60°C)		Btu/h	41 300	18 400
Differential Burner	Room sealed chamber panel fitted	mbar	1.7	0.4
Pressure		in wg	0.68	0.16
Gas Rate		m³/h	1.31	0.6
		ft³/h	46.2	21.2

Alpha CD18R

Central Heating			MAX.	MIN.
Heat Input (H_s)		kW	20.4	6.2
(Gross)		Btu/h	69 600	21 100
Heat Input (H_i)		kW	18.4	5.6
(Net)		Btu/h	62 800	19 100
Heat Output (H_s condensing)		kW	19.6	5.9
(50°C/30°C)		Btu/h	66 800	20 100
Heat Output (H_i non-condensing)		kW	18.0	5.4
(80°C/60°C)		Btu/h	61 400	18 400
Differential Burner	Room sealed chamber panel fitted	mbar	3.54	0.4
Pressure		in wg	1.42	0.16
Gas Rate		m³/h	1.94	0.6
		ft³/h	68.5	21.2

Alpha CD24R

Central Heating			MAX.	MIN.
Heat Input (H_s)		kW	26.6	7.5
(Gross)		Btu/h	90 700	25 600
Heat Input (H_i)		kW	24	6.8
(Net)		Btu/h	81 900	23 200
Heat Output (H_s condensing)		kW	25.6	7.2
(50°C/30°C)		Btu/h	87 300	24 600
Heat Output (H_i non-condensing)		kW	23.5	6.5
(80°C/60°C)		Btu/h	80 200	22 200
Differential Burner	Room sealed chamber panel fitted	mbar	5.6	0.6
Pressure		in wg	2.24	0.24
Gas Rate		m³/h	2.54	0.72
		ft³/h	89.7	25.4

2.2 SEALED SYSTEM

Note: When installed using a sealed heating system, a sealed system kit must be fitted.

Central Heating (Sealed System)	
Max. Working System Pressure	2.5 bar
Min. System Pressure	0.5 bar
Max. System temperature	82°C
Pressure Relief Valve Setting	3 bar (44 PSI)
Expansion Vessel Size (pre-charge press.)	8 L at 1.0 bar
Flow Connection	22 mm
Return Connection	22 mm
Relief Valve Connection	15 mm
Recommended System Pressure (cold)	1.0 bar
CH Water Temp. (Approx. max.)	80°C (176°F)

Note: Refer to Fig. 5 when using with a fully pumped open vented system.

2.3 COMPONENTS

Burner		Stainless steel
Main Heat exchanger		Stainless steel
Main Burner Injector	CD13R/18R	5.1 mm
	CD24R	5.25 mm
Flue - Outer Duct		White
Flue - Inner Duct		Plastic

2.4 ELECTRICAL

Supply	230/240 V ~ 50 Hz
External Fuse	3 A
Power Consumption	55 W
Internal Fuse	F2 A
Electrode Spark Gap	3 - 4 mm

2.5 INSTALLATION

Min. Clearances for Servicing (from casing)	Top	235 mm
	Bottom	100 mm
	Sides	5 mm
	Front	450 mm
Flue Terminal Size		100 mm Dia.
Flue Terminal Protruding		100 mm
Hole Size Required For Flue Assy.		110 mm Dia.
Lift Weight	CD13R/18R	27 kg
	CD24R	28 kg

2.6 GENERAL

Case Dimensions	Height	600 mm
	Width	390 mm
	Depth	305 mm
Gas Connection	CD13R/18R	15 mm
	CD24R	22 mm
Primary Water Content		1.6 L
Air Duct Diameter		100 mm
Flue Duct Diameter		60 mm

2.7 FLUE LENGTHS

CD Easy-Flue 500 mm with terminal and 90° bend. A CD Easy-Flue 1000 mm with terminal and 90° bend is also available.
CD 750 mm and CD 1000 mm flue extensions are available.
Length of Flue Required:-

Rear Flue (includes terminal) = wall thickness + 170 mm (or 140 mm for CD24R)
Side Flue (includes terminal) = wall thickness + distance between wall and side of boiler + 200 mm
Vertical Flue = distance from top of boiler side panel to required roof position minus 1 m for vertical terminal assembly

Maximum horizontal flue length = 12 m.
Maximum vertical flue length including terminal is 15 m.
Each additional CD 90° Bend is equivalent to 1.3 m of flue length.
Each CD 45° Bend is equivalent to 0.9 m of flue length.
The CD Vertical Flue terminal assembly is equivalent to 1 m of flue length.

2.8 PRESSURE LOSS ACROSS BOILER

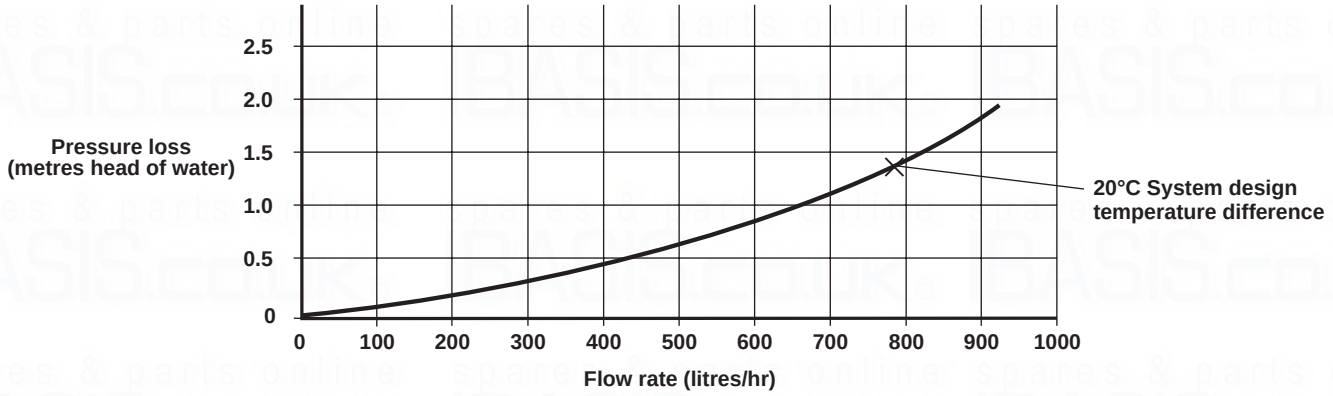

2.9 ELECTRICAL CONNECTIONS

Note: This Appliance Must Be Earthed
An optional integral two channel Clock kit (Part No. 6.1000220) is available if required.
Note: Only use the Alpha two channel clock. **Do not fit any single channel clocks.**

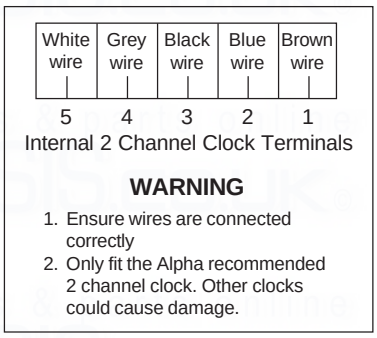

Clock connections

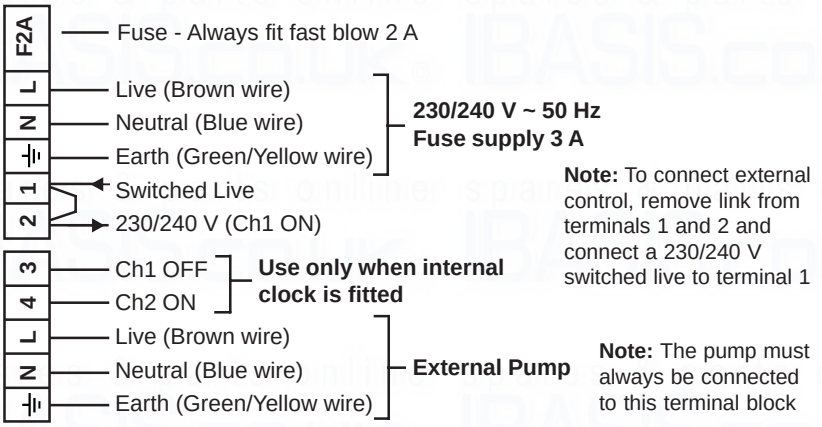

Fig. 1

Boiler terminal block

2.10 BOILER SCHEMATIC

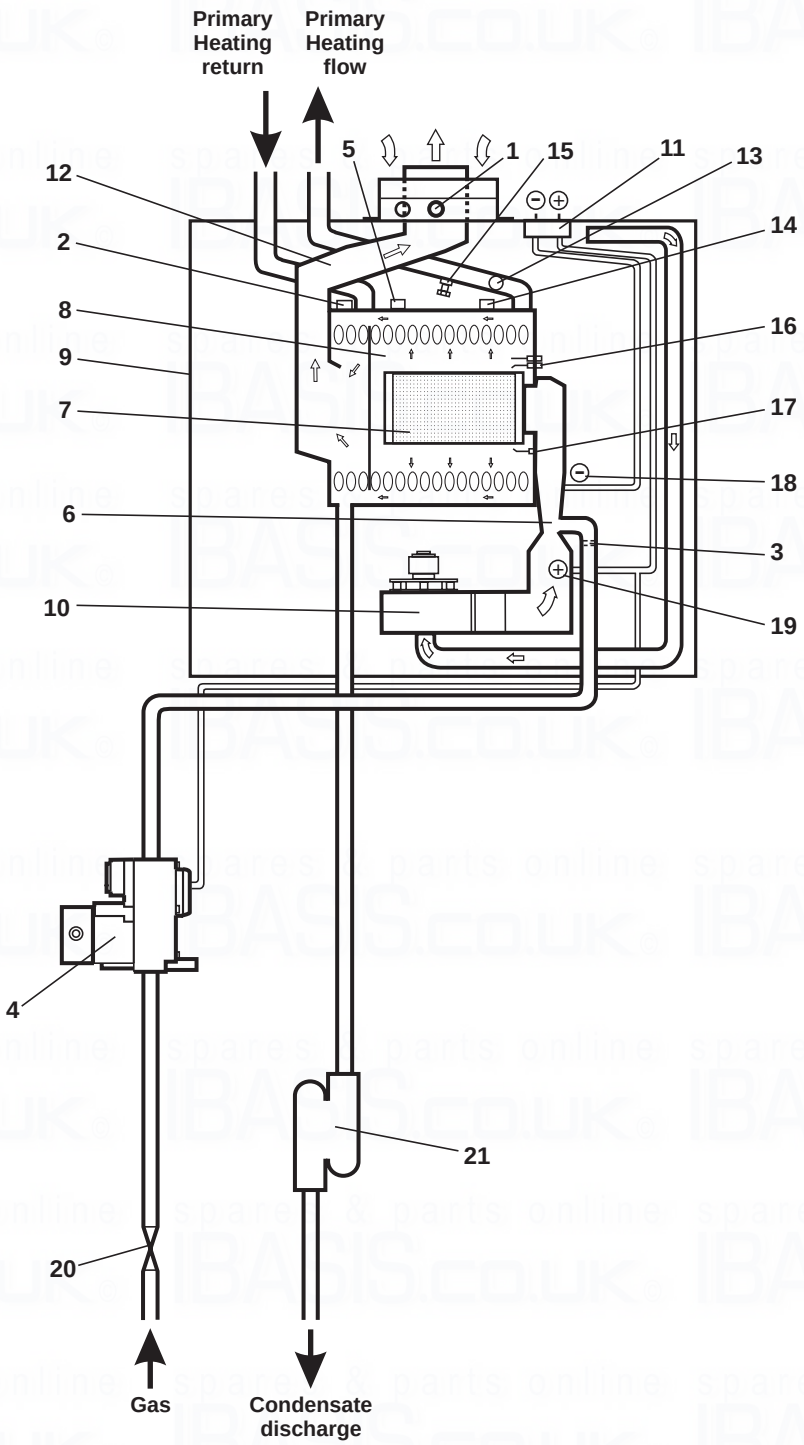

1	-	Flue sampling point	12	-	Flue hood
2	-	Flue thermostat	13	-	Overheat thermostat
3	-	Injector	14	-	Primary flow temperature sensor
4	-	Gas valve	15	-	Drain point
5	-	Primary return temperature sensor	16	-	Ignition electrodes
6	-	Venturi	17	-	Flame sensing electrode
7	-	Main burner	18	-	Venturi negative point
8	-	Primary/condensing heat exchanger	19	-	Venturi positive point
9	-	Room sealed chamber	20	-	Gas service cock
10	-	Fan	21	-	Condensate trap
11	-	Pressure differential test points			

Fig. 2

3 GENERAL BOILER INFORMATION

3.1 GAS SUPPLY

The CD13R boiler requires a gas rate of 1.31 m³/h (46.2 ft³/h).
The CD18R boiler requires a gas rate of 1.94 m³/h (68.5 ft³/h).
The CD24R boiler requires a gas rate of 2.54 m³/h (89.7 ft³/h).

The meter and supply pipes must be capable of delivering this quantity of gas in addition to the demand from any other appliances in the house. The CD13R and CD18R require at least a 15 mm gas supply pipe and the CD24R requires a 22 mm gas supply pipe.

The complete installation, including the meter, must be tested for gas soundness and purged as described in BS 6891.

3.2 ELECTRICAL SUPPLY

The boiler requires a 230/240 V ~ 50 Hz mains supply, fused at 3 A

The boiler must be earthed.

There must only be one common isolator, providing complete electrical isolation, for the boiler and any external controls.

This boiler has been fitted with a supply cable, however, if it is necessary to fit a cable use PVC insulated cable not less than 0.75 mm² (24 x 0.2 mm) to BS 6500 Table 16. The boiler should be connected to a fused three pin plug and unswitched shuttered socket outlet (both complying with BS 1363), or a fused double pole switch with a contact separation of at least 3 mm in both poles.

Wiring external to the boiler must be in accordance with the current IEE Wiring Regulations (BS 7671).

Note: If a room thermostat is fitted, it must be suitable for 230/240 V switching.

3.3 AIR SUPPLY

The boiler does not require any air vents for cooling in the room in which it is installed or when installed in a cupboard or compartment. The minimum clearances for servicing must always be maintained.

Note: A cupboard or compartment used to enclose the boiler must be designed and constructed specifically for the purpose, i.e. comply with the Building Regulations.

3.4 FLUE SYSTEM - Fig. 3

The flue system must be installed in accordance with BS 5440:1.

For horizontal flues ensure the flue assembly is horizontal and the inner duct is sloping downwards towards the boiler.

Flue components are available as follows:-

CD Easy-Flue 500 mm (includes 90° bend and terminal) - Part No. 6.2000510.
CD Easy-Flue 1000 mm (includes 90° bend and terminal) - Part No. 6.2001010.
CD 750 mm flue extension - Part No. 6.2000750.
CD 1000 mm flue extension - Part No. 6.2001050.
CD 90° bend - Part No. 6.2000590.
CD 45° bend - Part No. 6.2000545.
CD Vertical flue terminal assembly. Refer to the separate installation instructions supplied with the assembly.

The following methods determine the correct length of flue required.

For rear exit flue (including terminal) L = B + 170 mm (or 140 mm for CD24R)

For side exit flue (including terminal) L = B + C + 200 mm (min. side clearance required is 5 mm)

For vertical flue L = H minus 1000 mm for vertical terminal assembly

Where L = Required flue length
B = Finished wall thickness
C = Distance from the inside wall to the side of the boiler
H = Distance from top of boiler side panel to roof position

Note:
1. If an extra 90° bend is used, this reduces the maximum flue length by 1.3 m. Each 45° bend used reduces the maximum flue length by 0.9 m.
2. Under no circumstances must the flue length (including allowances for extra bends) exceed 12 metres horizontally and only 15 metres vertically.
3. Failure to use Alpha CD flue components with the boiler will invalidate the boilers CE approval, guarantee and may be unsafe.
4. Further Plume management flue accessories are available - Refer to the Easy-Flue installation instructions.

HORIZONTAL FLUE OPTIONS - Lmax = 12 metres

L = B + C + 200 mm

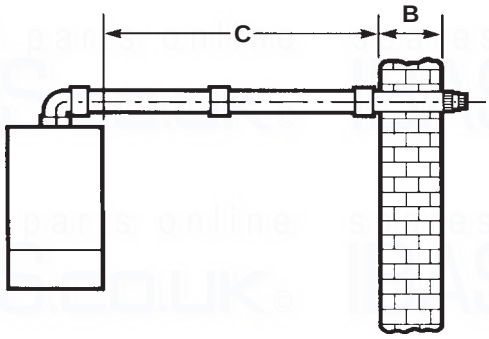

L = B + C + E + 200 mm

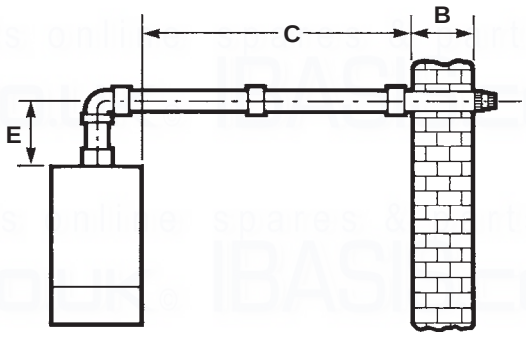

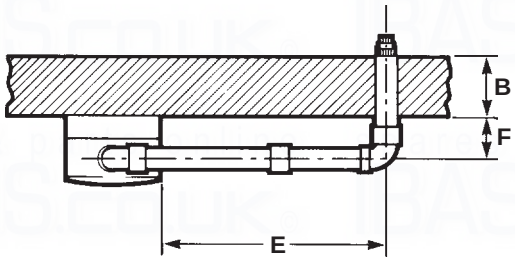

L = B + E + F + 200 mm + (90° bend = 1.3 metre)

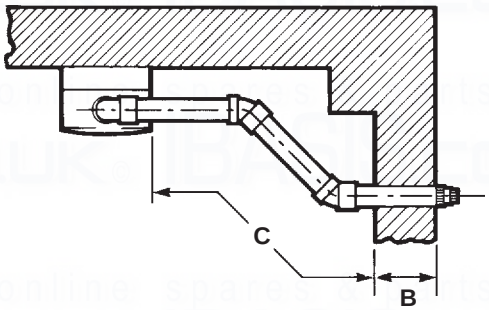

L = B + C + 200 mm + (2 x 45° bends = 1.8 metre)

VERTICAL FLUE OPTIONS

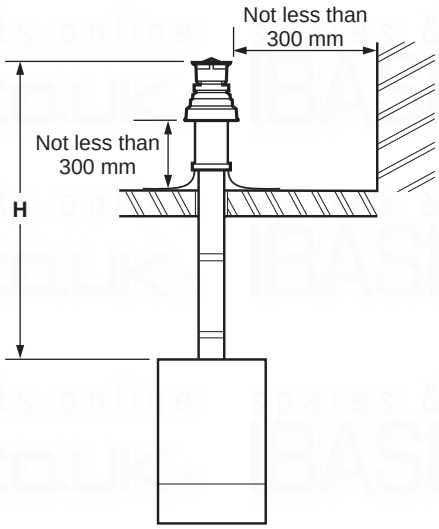

Hmax = 15 m

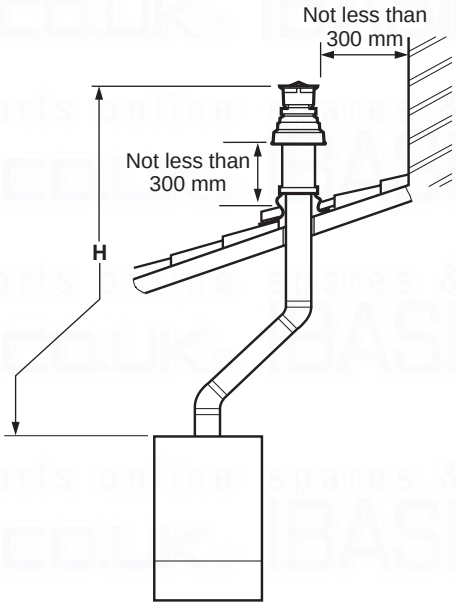

Hmax = 13.2 m

Fig. 3

3.5 FLUE TERMINAL LOCATION - Fig. 4

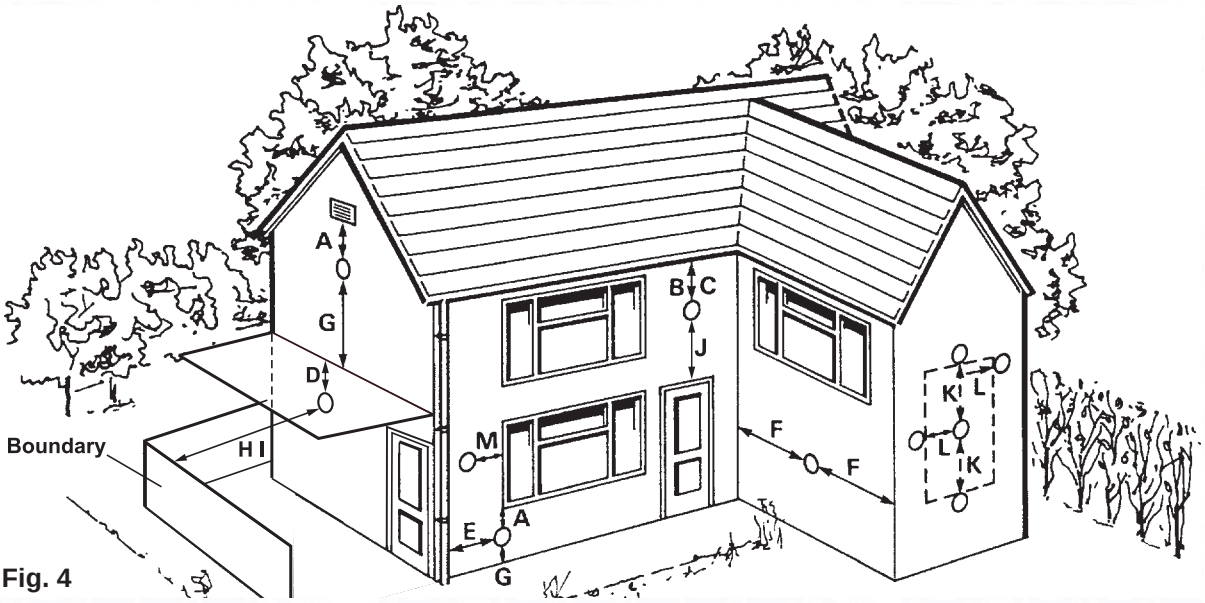

Fig. 4

	Terminal position	Min. distance (mm)
A	Directly below an opening, air brick, windows, etc.	300 (See Note 1)
B	Below gutters, soil pipes or drain pipes	75 (See Note 3)
C	Below eaves	200 (See Note 3)
D	Below balconies	200 (See Note 3)
E	From a vertical drain pipe or soil pipe	150 (See Note 3)
F	From an internal or external corner	300 (See Note 2)
G	Above ground, roof or balcony level	300
H	From a surface facing the terminal	600 (See Note 4 & 5)
I	From a terminal facing the terminal	1200 mm
J	Above an opening, air brick, window etc.	300 (See Note 1)
K	Vertically from a terminal on the same wall	1500 mm
L	Horizontally from a terminal on the same wall	300 mm
M	Horizontally from an opening, air brick, window etc.	300 mm (See Note 1)

Note: A terminal must not be sited under a car port roof

Notes:
1. In addition, the terminal should not be nearer than 150 mm to the framework of an opening into the buiding, i.e. a window surround or door surround.
2. This clearance may be reduced to 25 mm without effecting the performance of the boiler. However, to ensure the condensate plume does not affect adjacent surfaces a clearance of 300 mm is preferable.
3. These clearances may be reduced to 25 mm without effecting the performance of the boiler. However, to ensure the condensate plume does not affect adjacent surfaces the terminal should be extended beyond gutters, pipes, eaves, balconies etc.
4. It is recommended the terminal should not be less than 2000 mm from boundary walls, fences etc. if the plume is likely to cause a nuisance.
5. This distance may be reduced to 300 mm if terminal is not facing the boundary.

Note: In certain weather conditions the terminal will emit a plume of steam. If possible avoid positioning the terminal where this may cause a nuisance, i.e. positions A, D, G, H, J or M.

The flue terminal must be exposed to the external air and the position must allow the free passage of air across it at all times.

If the terminal is fitted within 850 mm of a plastic or painted gutter or 450 mm of painted eaves, an aluminium shield at least 1 m long should be fitted to the underside of the gutter or painted surface. A terminal must not be sited below 2 m where people have access to, such as public footpaths, access routes, patios etc. However, If the terminal is fitted less than 2 m above a surface where there is no public access, the terminal must be protected by a terminal guard.
A suitable guard is available from Alpha Therm Ltd.
For further information refer to BS 5440 Pt1:2008.

3.6 BOILER LOCATION

The boiler is not suitable for external installation, unless it is installed within a purpose designed weatherproof building.

The boiler must be installed on a flat vertical wall which is capable of supporting the weight of the boiler. The boiler can be fitted to or adjacent to a wall comprising of a combustible material without the need for a special thermal insulation barrier.

If the boiler is to be fitted in a timber framed building, it should be fitted in accordance with the Institute of Gas Engineers 'Guide for Gas Installations in Timber Frame Housing', reference IGE/UP/7.

The boiler may be installed in any room or internal space, although particular attention is drawn to the requirements of the current IEE Wiring (BS7671) Regulations, and in Scotland, the electrical provisions of the Building Regulations applicable in Scotland, with respect to the installation of the boiler in a room or internal space containing a bath or shower. Where a room-sealed boiler is installed in a room containing a bath or shower, it must not be possible for a person using the bath or shower to touch any electrical switch or boiler control utilising mains electricity.

The boiler may be installed in a cupboard or compartment, provided it is correctly designed for that purpose, i.e. complies with the Building Regulations and the requirements of BS 6798.

3.7 CENTRAL HEATING SYSTEM - Fig. 5 and 5a

The boiler is designed for use in an open or (if the alpha sealed system kit is used) sealed central heating system in accordance with the requirements of BS 5449 and BS 6798.

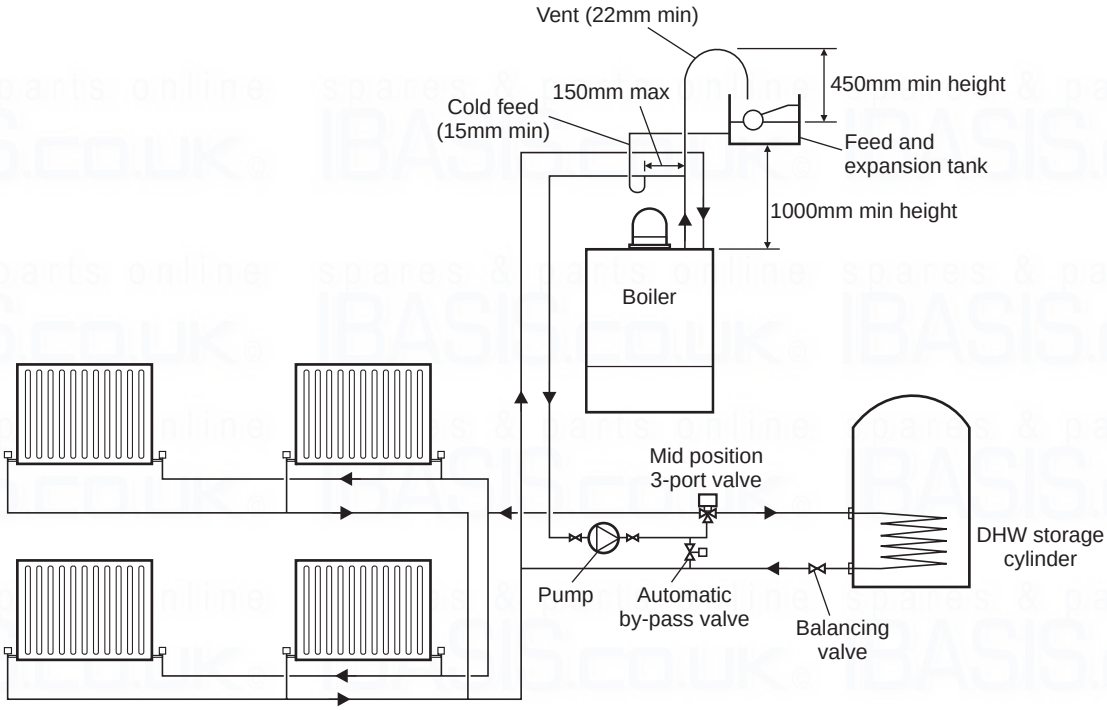

Fig. 5 - Open system with Y-Plan

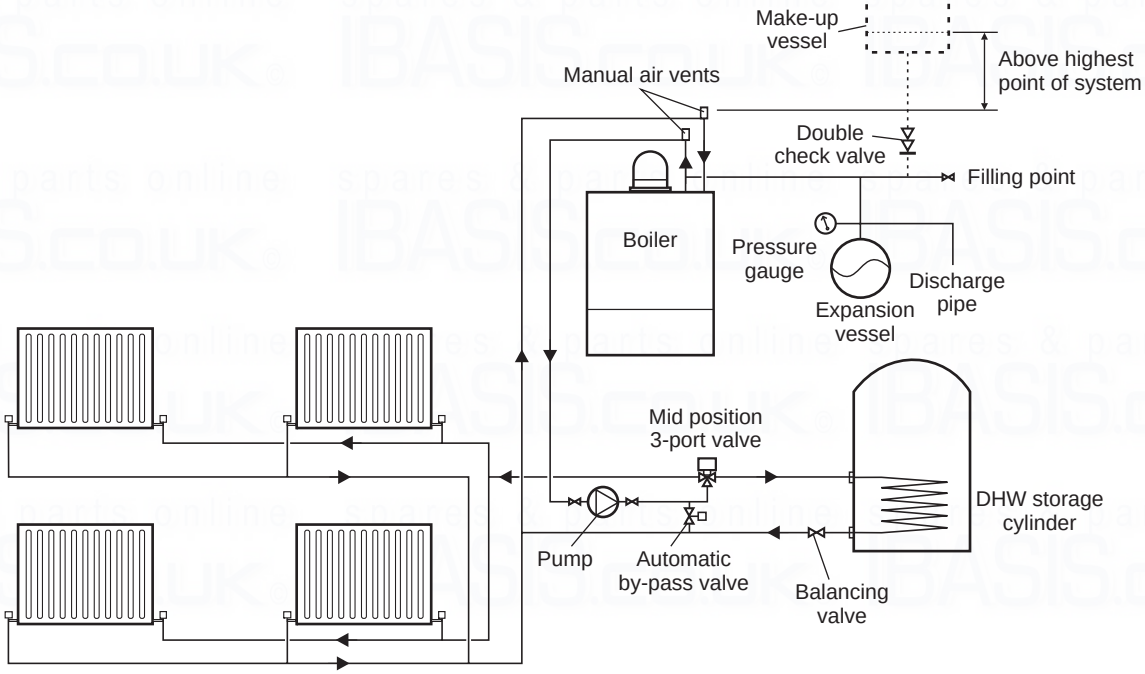

Fig. 5a - Sealed system with Y-Plan

3.8 FILLING THE OPEN VENTED CENTRAL HEATING SYSTEM

A minimum head of 1 m is required between the boiler/pump and the feed and expansion tank.

The boiler must be supplied from an unrestricted water supply taken from a feed and expansion cistern situated at a maximum height of 27 m above the boiler.

The cold feed must be 15 mm minimum size. The vent should be 22 mm in size, rise continuously and be unrestricted.

It is important that the relative positions of the pump, cold feed and open vents are as shown in Fig. 5.

The domestict hot water cylinder must be of the fully indirect coil type.

3.9 FILLING THE SEALED CENTRAL HEATING SYSTEM - Figs. 6, 7

The system design pressure (cold) should be set to 1.0 bar. This pressure is equivalent to a static head (see Fig. 5) of 10.2 metres of water.

Provision should be made to replace water lost from the system. This can be by manual or automatic means, as shown in Figs. 6 and 7. The position for connecting an automatic make-up vessel is indicated in Fig. 5a. A double check valve assembly must be used, as shown in Fig. 7.

Filling of the system must be carried out in a manner approved by the local Water Undertaking. Where allowed, the system may be filled via a temporary connection as shown in Fig. 6. After filling, always disconnect the flexible hose of the filling loop.

All fittings used in the system must be able to withstand pressures up to 3 bar.

Drain taps (to BS 2879) must be used to allow the system to be completely drained.

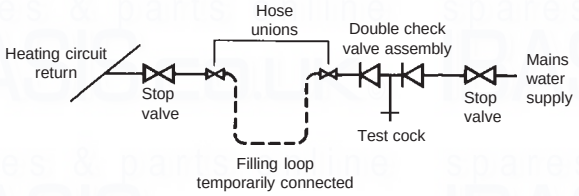

Fig. 6

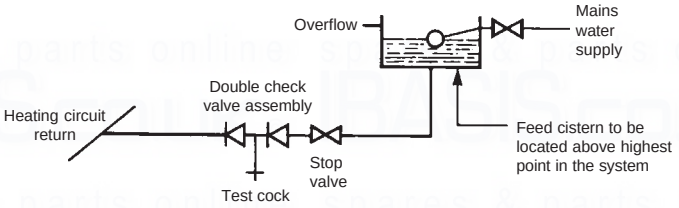

Fig. 7

3.10 FLUSHING THE HEATING SYSTEM

It is essential that the central heating system is thoroughly cleaned and flushed when fitting an Alpha CD boiler. Failure to do so will invalidate the warranty.

The primary and condensing heat exchanger is constructed in stainless steel and therefore is compatible with most materials used in a heating system.

If a cleaning agent and inhibitor are used, they must be applied in accordance with their manufacturers instructions. Only products from Fernox and Sentinel are acceptable for use with the Alpha CD boilers. Further information can be obtained from Fernox (Tel: 0179 9521133) or Sentinel (Tel: 0151 4209563).

The system should be flushed in accordance with BS 7593 and BS 5449. The following procedures are recommended:

1. Installing onto a new system:-
   a. Fill the system, vent at high points, at pump and radiators.
   b. Check for leaks.
   c. Rapidly drain the system.
   d. If required, chemically clean the system as instructed by the recommended cleaner manufacturer.
      Note: Ensure that the system is flushed to remove any remains of the cleaner.
   e. If chemical cleaner is not used to clean the system:-
      i) Refill the system.
      ii) Switch on the boiler and allow the system to heat up to the normal operating temperature.
      iii) Rapidly drain the system while the water is still hot.
      iv) Refill the system.
   f. As required, add the recommended inhibitor to the system as instructed by the inhibitor manufacturer.
   g. Recheck for leaks.
2. Installing onto an existing system, clean the system before fitting the new boiler:-
   a. If the old boiler is still working:-
      i) Switch on the boiler and allow the system to heat up to the normal operating temperature.
      ii) Rapidly drain the system while the water is still hot.
      iii) Refill and chemically clean the system as instructed by the recommended cleaner manufacturer.
      iv) Ensure the system is flushed to remove any remains of the cleaner.
      v) Fit the new boiler.
   b. If the old boiler is not working:-
      i) Rapidly drain the system.
      ii) Remove the old boiler.
      iii) Flush the system through.
      iv) Fit the new boiler.
      v) Refill and chemically clean the system as instructed by the recommended cleaner manufacturer.
      vi) Ensure the system is flushed to remove any remains of the cleaner.
   c. As required, add the recommended inhibitor to the system as instructed by the inhibitor manufacturer.
   d. Check for leaks.

3.11 DISPOSAL OF CONDENSATE

Provision must be made for the safe disposal of condensate produced by the flue gases of the Alpha CD boilers and reference should be made to BS 6798: 2000 for the requirements on the disposal of condensate.

The boilers incorporate a condensate trap which has a seal of 75 mm, therefore no additional trap is required.

The condensate should ideally be discharged internally into an internal waste pipe (washing machine/sink waste) or soil pipe to avoid the possible risk of freezing. The pipework must be in 22 mm pipe.

External pipe runs should be avoided, but if it is necessary, the pipework should be protected from the risk of freezing with waterproof insulation and the length should be kept to a maximum of 3 m. Alternatively the condensate pipework could be increased to a minimum of 32 mm diameter without the requirement to insulate the pipework. Termination should be into an external gulley or soakaway as shown in Figs. 8 and 9.

Note: All pipework must have a continuous fall (see Figs. 8 and 9) from the boiler and must be of an acid resistant material such as plastic waste pipe. (copper or steel is not suitable).

It should be noted that the connection of a condensate pipe to a drain may be subject to local building control requirements.

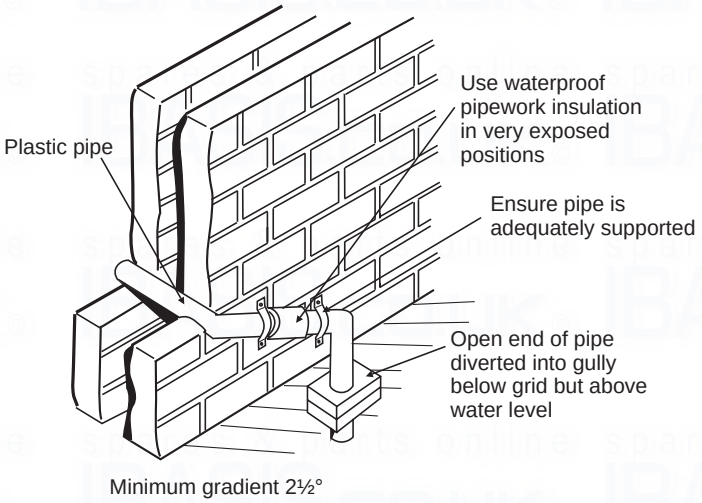

Fig. 8 - External gully

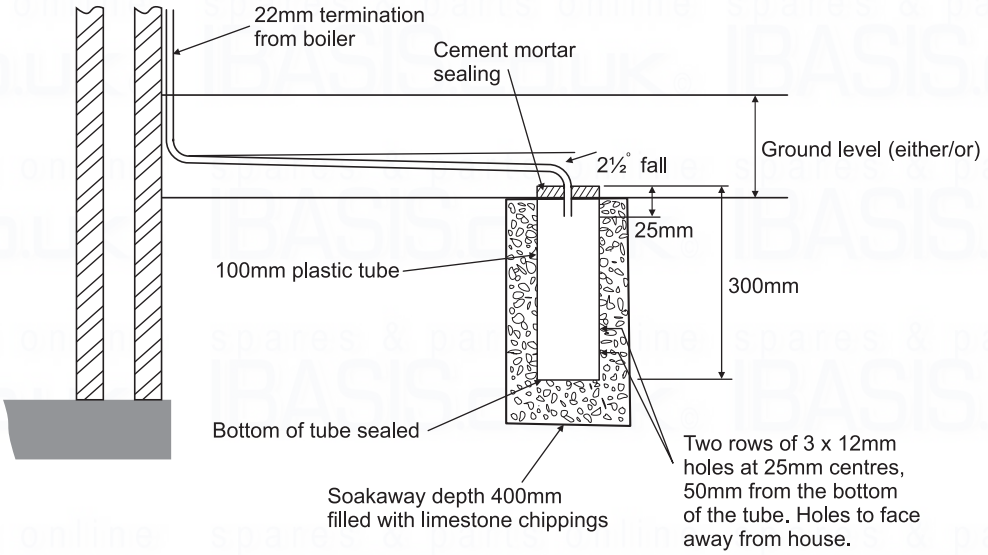

Fig. 9 - External soakaway

4 INSTALLATION

4.1 UNPACKING

1. The boxes required when the boiler is installed with a horizontal flue are as follows:-

   Box 1 Cased boiler fitted with gas isolation valve, gas union and washers
   Mounting bracket plus screws and wall plugs, 15 mm gas union bend
   Literature pack and Wall template

   Box 2 CD Easy-Flue 500 mm or CD Easy-Flue 1000 mm. Both include 90° bend and horizontal flue terminal
   Note: NOT required for vertical flue

   Notes: a. All flues must be suitable for CD condensing boilers.
   b. CD 750 mm and 1000 mm flue extensions are available, if required.

2. Unpack boiler and remove the loose items packs and mounting bracket.

   Note: To prevent any damage being caused, ensure the gas union bend is removed before standing the boiler in an upright position.

4.2 CLEARANCES REQUIRED - Fig. 10

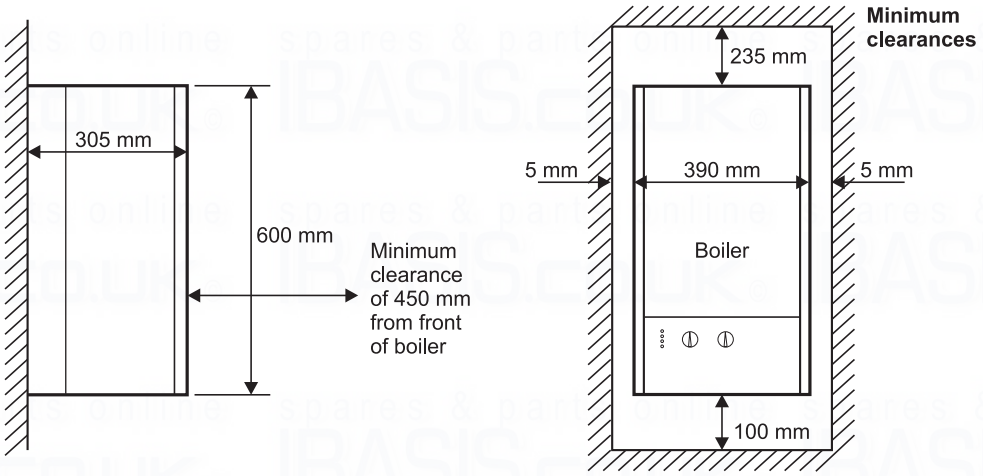

Fig. 10

4.3 PREPARE THE WALL - Figs. 11, 12

1. Decide upon the position of the boiler taking into account the clearances required for servicing and the flue terminal position.
2. Tape the template to the wall (ensure it is level and the right way up) and mark the position of the holes for the boiler mounting bracket and bottom fixings. If rear exit flue is used, mark the position of the hole for the flue.
3. **Side exit flue -** Continue the horizontal centre line of the flue across the wall to the side wall, then along the side wall 160 mm for the CD13R and CD18R or 130 mm for the CD24R (ensure the lines are horizontal). This will give the position of the centre of the hole for the flue.
4. Cut the 110 mm diameter hole (or use a 107 mm core drill) in the wall for the flue.
   Notes: a. Ensure the hole is horizontal.
   b. For internal fitting of the flue, using the flue sealing collar supplied, cut a 130 mm dia. flue hole using a 127 mm core drill.

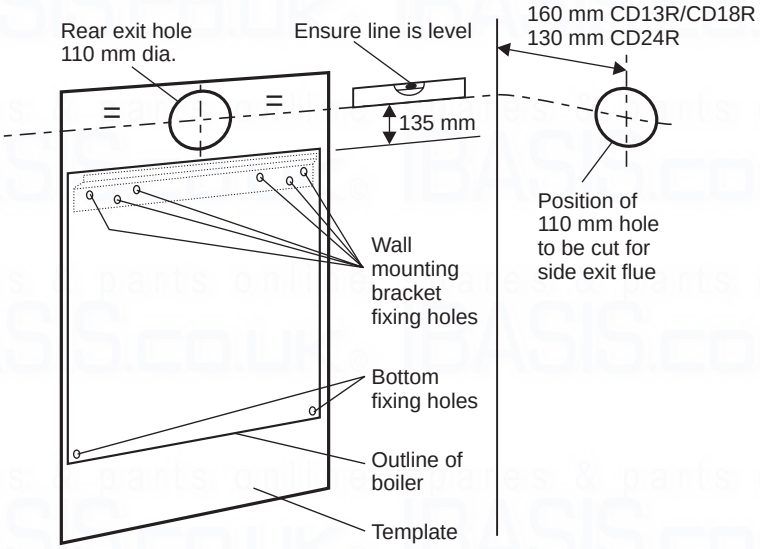

Fig. 11

5. Drill the fixing holes (10 mm dia.) to accept the No.10 plugs supplied. Using the screws supplied, fit the mounting bracket.

4.4 FIT THE BOILER - Refer to Fig. 11

1. Lift the boiler and locate it on the mounting bracket. Fit the bottom screws to secure the boiler in position.

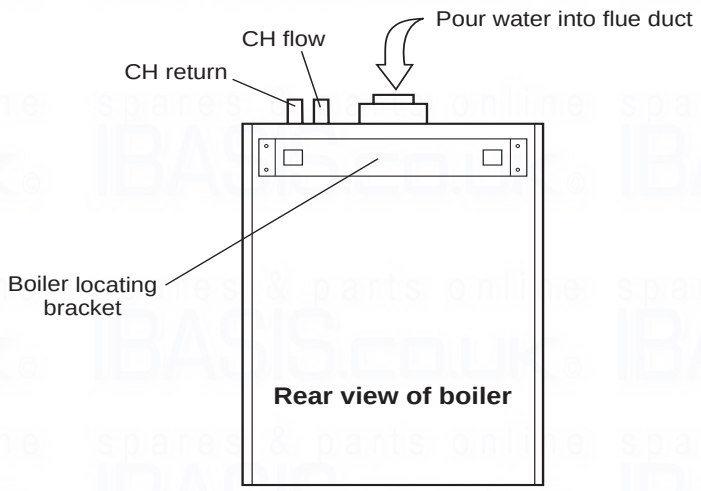

Fig. 12

4.5 CONNECT THE PIPEWORK - Fig. 13

1. Thoroughly flush out all the water pipework. Refer to Section 3.9.
2. The gas isolation valve has been factory fitted, however, check that the connections underneath the boiler have been tightened.
   Note: When soldering to the boiler union bend, ensure the bend is not connected to the valve, otherwise the internal seals may be damaged.
3. Connect the system pipework to the boiler.
   Note: Ensure the flow and return pipes are correctly connected to the boiler. Refer to Fig. 12.
4. Connect the 22 mm condensate trap drain pipe to the condensate discharge pipe.
   Ensure that the condensate discharge pipe is as required in Section 3.11.
   Pour at least 0.5 litre of water into the flue duct, as shown in Fig. 12, and check the condensate discharge pipe for soundness.
5. Ensure that the gas isolation valve is closed (spindle flats at right angles to valve) and do not turn on the gas supply at this stage.

A - Gas valve
B - Gas isolating valve
C - Condensate trap

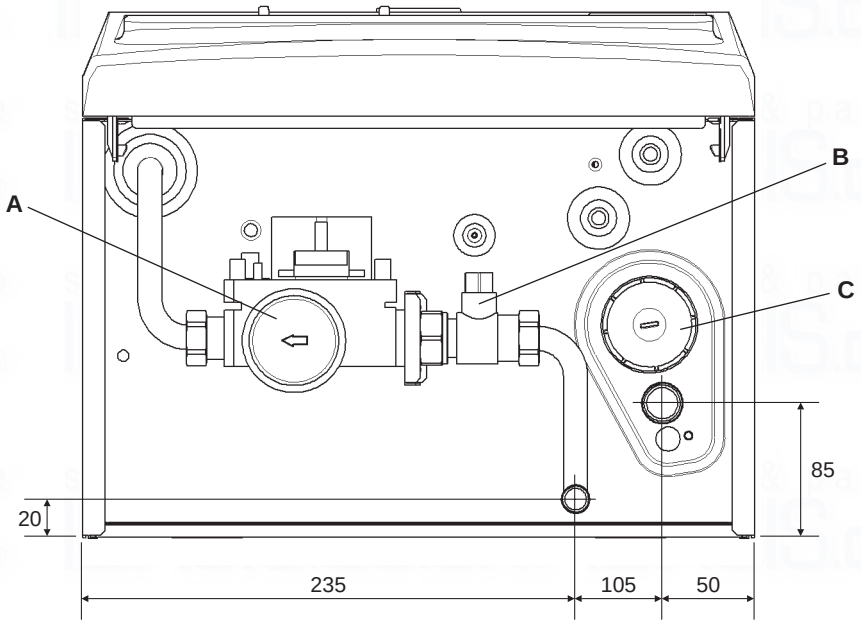

Fig. 13

4.6 FIT THE FLUE - Figs. 14, 15

The following procedure applies to fitting an Alpha CD Easy-Flue to both rear or side exit flue - horizontally only.

1. The CD Easy-Flues are suitable for use in the flue length ranges shown in the tables below.
   Note: Where the length is less than the minimum or more than the maximum, refer to Section 4.7.

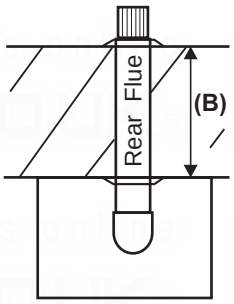

Fig. 14

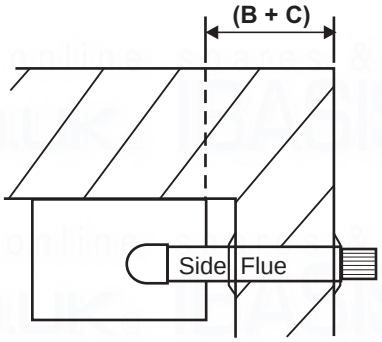

Fig. 15

CD Easy-Flue	B (mm)			
	Max		Min	
	13R/18R	24R	13R/18R	24R
500 mm	515	545	325	355
1000 mm	960	990	750	780

CD Easy-Flue	B + C (mm)	
	Max	Min
500 mm	475	285
1000 mm	920	710

2. Determine the overall length (L) of flue required, (see Fig. 16) as follows:-

   Rear flue L = wall thickness (B) + 90 mm for CD13/18R or 60 mm for CD24R
   Side flue L = wall thickness (B) + distance between boiler and wall (C) + 120 mm

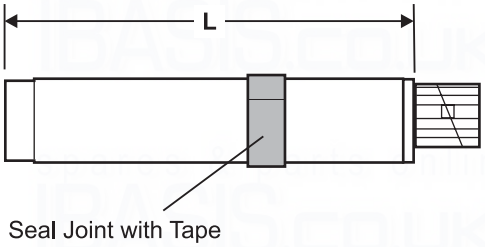

Fig. 16

3. Adjust the telescopic section of the flue to the distance 'L', ensuring that the two labels marked 'TOP' are aligned, then seal and secure the joint between the ducts with the sealing tape supplied.
4. Pass the flue assembly through the wall (from inside or outside).
   Note: Internal fitting - If there is no access to make good the outside wall, locate the flue sealing collar onto the outer duct of the flue immediately before the terminal grille onto the location provided. Push the flue assembly through the 130 mm flue hole, so that the collar completely passes through the wall. Then pull the flue assembly back into the correct position. Visually check that the collar is sealing the outside wall and that it is not restricting any of the openings of the flue terminal.

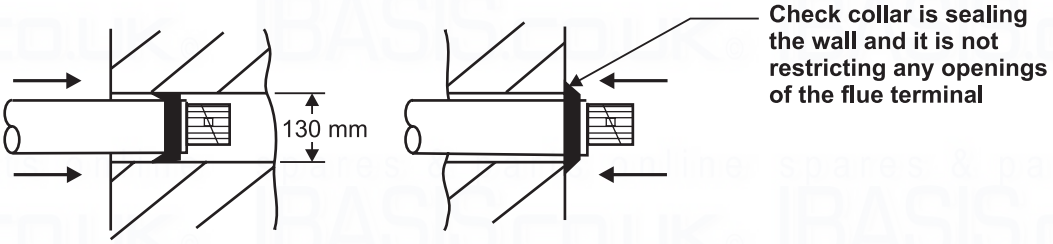

Fig. 17 - Fitting the flue from inside

5. Position the seal and clamp (two screws) supplied, over the bend. Fit the bend to the boiler and rotate to the correct position. Secure in position using the seal and clamp, ensuring the seal is located centrally over both the bend and boiler adaptor.
6. Fit the inside flue sealing collar over the Easy-Flue. Fit the outside flue sealing collar onto the flue immediately before the terminal grille onto the location provided.

f. Slide the clamp (three screws) over the outer duct and pull the flue assembly towards the bend, locating the inner duct into the seal joint on the bend. Ensure the labels marked 'TOP' are positioned at the top before securing the flue assembly to the bend with the clamp (three screws) located centrally over the joint.
Note: Check the flue terminal protrudes 90 mm out of the wall and the inner duct of the terminal is positioned correctly (see Fig. 18).

g. Make good the inside wall by pushing the inside flue sealing collar up to the wall.

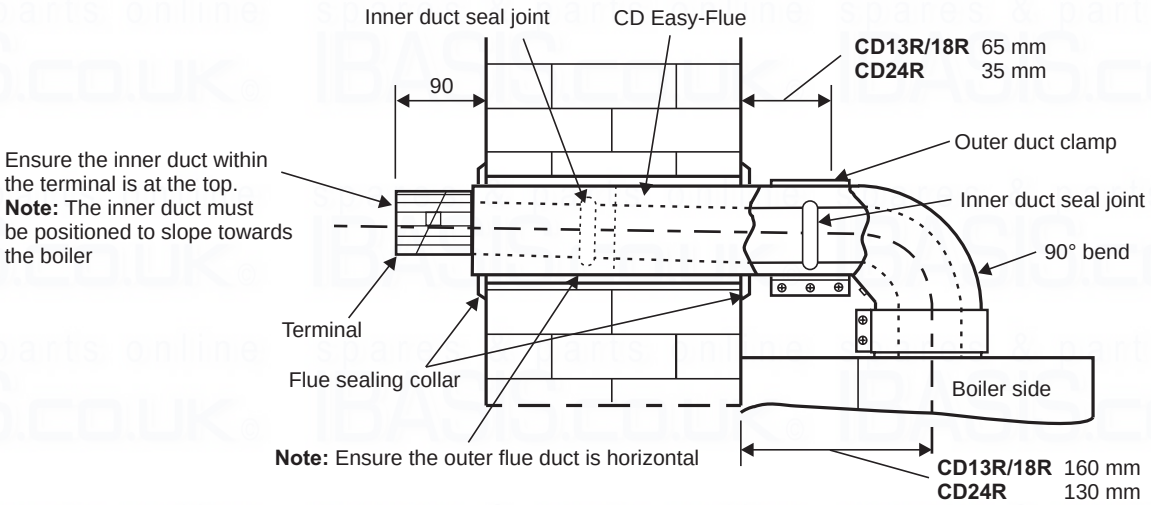

Fig. 18 - Rear flue

4.7 EXTENDING THE FLUE - Fig. 19

Note: The maximum horizontal flue assembly length must not exceed a length of 12 metres.

1. When the flue length required is more than the maximum or less than the minimum stated in Section 4.6, paragraph 1, refer to the table below.

Flue Length	Rear Flue (B)	Side Flue (B + C)	Comments
CD13R/18R Up to:- CD24R Up to:-	11.93 m max 11.96 m max	11.89 m max 11.89 m max	Alpha CD 750 mm or 1000 mm flue extension (Part No. 6.2000750 or 6.2001050) is required to extend the range of telescopic flue. Refer to Section 4.7 paragraph 2 for instructions on how to extend the flue. **Note:** A 130 mm flue hole (127 mm core drill) is required in the wall.
CD13R/18R Between:- CD24R Between:-	740 mm and 945 mm 770 mm and 975 mm	700 mm and 905 mm 700 mm and 905 mm	Within the standard Easy-Flue 1000 mm (Part No. 6.2001010) telescopic range.
CD13R/18R Between:- CD24R Between:-	95 mm and 685 mm 125 mm and 715 mm	55 mm and 645 mm 55 mm and 645 mm	Discard the first telescopic section of the Easy-Flue 1000 mm (i.e. not with terminal) and cut to the required length 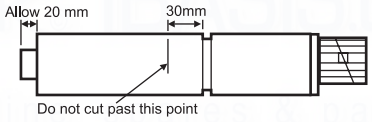
CD13R/18R Between:- CD24R Between:-	300 mm and 505 mm 330 mm and 535 mm	260 mm and 465 mm 260 mm and 465 mm	Within standard Easy-Flue 500 mm (Part No. 6.2000510) telescopic range.
CD13R/18R Between:- CD24R Between:-	95 mm and 245 mm 125 mm and 275 mm	55 mm and 205 mm 55 mm and 205 mm	Discard the first telescopic section of the Easy-Flue 500 mm (i.e. not with terminal) and cut to the required length. 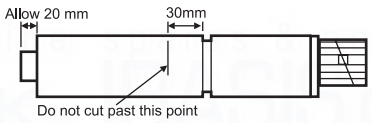
Less than above			Terminal may protrude somewhat from the outside wall.

2. Use the template (supplied with the boiler) to mark the required flue position and cut a 130 mm diameter hole for the flue (use a 127 mm core drill). The size of the hole provides sufficient clearance for the clamps on the flue extension to pass through the hole.

3. Determine the overall flue length as described in Section 4.6, paragraph 2 to determine the number of Alpha CD 750/1000 mm flue extensions required.
4. Assemble the flue extensions together by locating the inner duct into the seal joint and secure each extension together with the clamps supplied (three screws). Ensure that the clamps are positioned centrally over the joints.
   Note: If it is required to cut an extension, **DO NOT** cut the end of the inner duct that incorporates the seal joint. Ensure the inner duct end without the seal joint is cut so that it is 15 mm longer than the outer duct.
5. Adjust the telescopic section of the Easy-Flue to the required length and secure the Easy-Flue with the sealing tape supplied. Fit the Easy-Flue to the extensions by locating the inner duct into the seal joint and secure with the clamp (three screws), ensuring it is located centrally over the joint.
6. Mark the end of the flue assembly 'TOP' where it is connected to the boiler,so that the 'TOP' of the flue terminal is aligned with the 'TOP' at the boiler end of the flue assembly.
7. Pass the complete flue assembly through the wall.
8. Position the seal and clamp (two screws) supplied, over the bend. Fit the bend to the boiler and rotate to the correct position and secure in position using the seal and clamp, ensuring that the seal is positioned centrally over both the bend and adaptor.
9. Slide the clamp (three screws) over the outer duct and pull the flue assembly towards the bend, locating the inner duct into the seal joint on the bend.
10. Secure the flue assembly to the bend with the clamp (three screws) ensuring it is positioned centrally over the joint, ensuring the 'TOP' marked on the outer duct is positioned at the top.

    Note: Check the flue terminal protrudes 100 mm out of the wall and that the inner duct of the terminal is positioned correctly, i.e. the inner duct within the terminal is at the top. See Fig. 19.
11. Make good the outside wall by fitting a flue sealing collar onto the location provided immediately behind the flue terminal grille. Make good the inside wall as required.

    Note: If flue sealing collars are being used to make good the inside wall, then they will need to be fitted before assembling the flue.

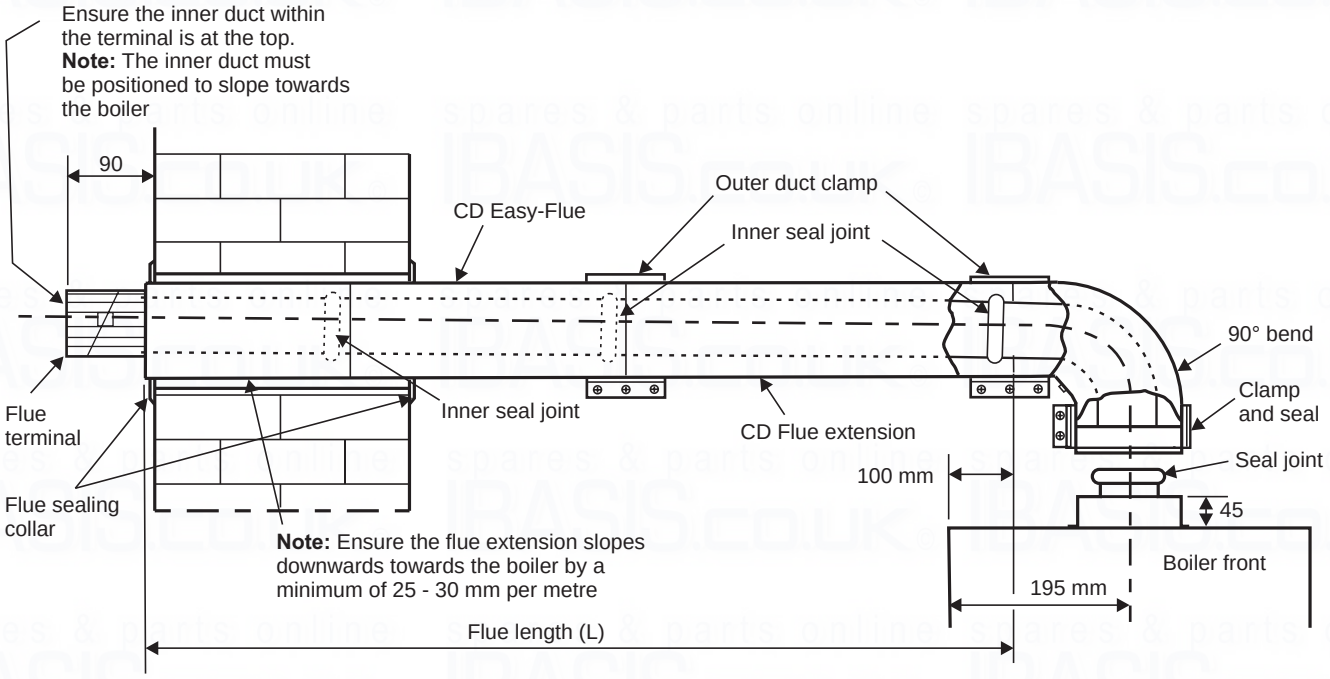

Fig. 19 - Side flue

4.8 CONNECT THE MAINS SUPPLY - Fig. 20

1. Gain access to the boiler terminal block by removing one screw at the top centre of the front panel, then lift up and remove panel. Release the two fixing screws (one each side) securing the control panel. Lower the control panel. Refer to Technical Data, Section 2.9 for connection details.
2. **Note:** This boiler has been fitted with a mains supply cable. However, if it is necessary to fit an alternative supply cable, ensure the cable clamp that has been fitted is removed and connect as follows:-
   Remove the two screws securing the terminal block cover from the back of the control box (see Fig. 20). Pass the mains supply cable through the grommet and cable clamp and connect as follows:- Brown to L, Blue to N and Green/Yellow to ⏚. Ensure correct polarity.
   Note: Ensure that the length of the earth wire is such that if the supply cable is pulled out of its clamp the live and neutral wires become taut before the earth wire.
   The main terminal block can be removed by pulling it off the pins to give easy access to the terminals.
   Do not switch on the electrical supply at this stage.

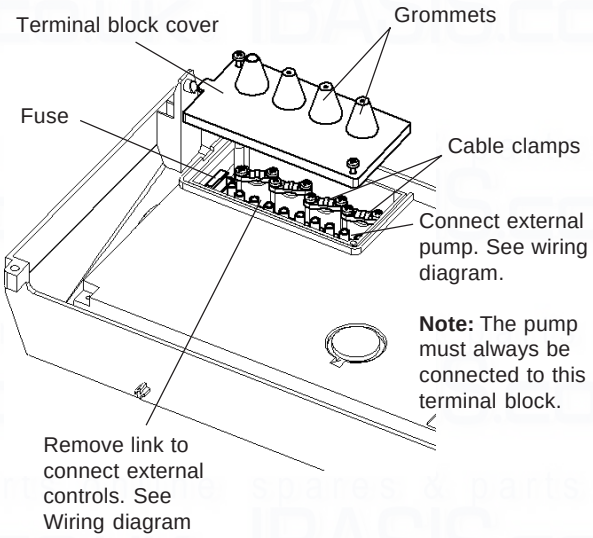

Fig. 20

3. If an external control, i.e. room thermostat or external clock is to be fitted, remove the terminal block cover and remove the link between terminals 1 and 2. Pass the cable through the cable clamp and connect it to terminals 1 and 2. Connect the external pump cable to the boiler terminal block by passing the cable through the cable clamp and connecting it to L, N and ⏚ terminals for the external pump. Replace the terminal block cover. (Refer to Section 2.9).
   Note: Ensure the pump is always connected to the boiler terminal block.
4. Replace the terminal block, ensuring it is located correctly on the plastic pins and replace the cover.
5. Ensure that there is sufficient free cable to allow the control panel to be raised and lowered then tighten the cable clamp screws.
6. Leave the control panel open until commissioning procedures have been completed.
7. Carry out electrical system checks - Short circuit, Polarity, Earth continuity and Resistance to earth with a suitable multimeter.

4.9 FIT THE CLOCK KIT - Fig. 21

Ensure the electrical supply to the boiler is isolated.

Note: Only use an Alpha two channel clock. **Do not fit a single channel clock.**

1. Remove the two screws securing the clock cover at the rear of the control panel.
2. Remove and discard the clock blanking panel.
3. Insert the clock into the opening and secure in place with the screws supplied - do not overtighten the screws..
4. Disconnect the clock wiring from the terminal block and connect it to the clock as follows:-
   Brown wire to terminal 1, Blue wire to terminal 2, Black wire to terminal 3, Grey wire to terminal 4 and White wire to terminal 5, (or as per the instructions supplied with the clock). Ensure wiring is correct.
   Note: Before the clock is fitted, remove the link between terminals 1 and 3 on the clock wiring harness fitted to the boiler.
5. Replace the clock cover. Do not overtighten the fixing screws.
6. Leave the control panel open until commissioning procedures have been completed.

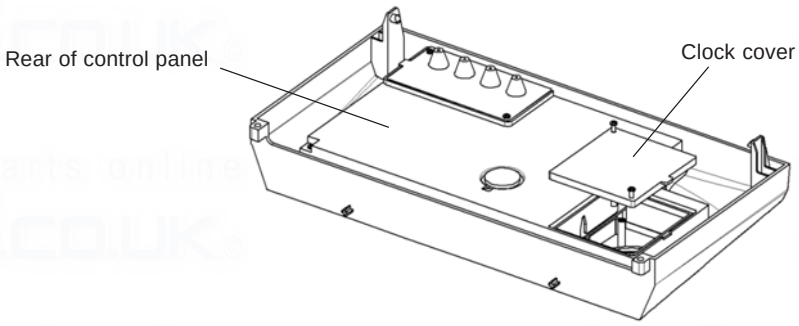

Fig. 21

5 COMMISSIONING

When commissioning the boiler, ensure the Benchmark Checklist is completed.

5.1 FILL THE SYSTEM

1. To remove the air - Vent each radiator in turn, starting with the lowest in the system.
2. It is important that the external pump is properly vented to avoid it running dry and damaging its bearings. Unscrew and remove the cap from the centre of the pump. Using a suitable screwdriver rotate the exposed spindle about half a turn, then replace the cap.
3. Refer to Sections 3.8, 3.9 and 3.10 for filling and flushing the system.
4. Ensure that the condensate trap has been filled with water. Refer to Section 4.5, paragraph 4.

5.2 BOILER CONTROLS - Fig. 22

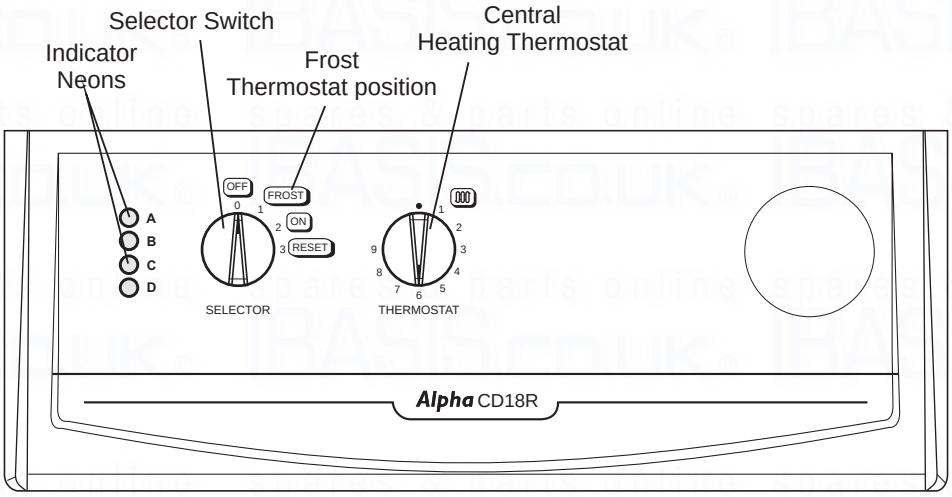

Fig. 22

5.3 TEST FOR GAS SOUNDNESS AND PURGE THE SUPPLY

1. With the boiler gas service cock closed (slot at right angles to valve). Pressure test the gas supply and inlet pipework connection to the boiler gas service cock for soundness in accordance with BS 6891.
2. Loosen the gas inlet pressure test point screw on the gas valve (see Fig. 24). Ensure the gas supply is on and open the boiler service cock to purge in accordance with BS 6891.
3. Retighten the test point screw and test for gas soundness. Close the boiler gas service cock.

5.4 INITIAL LIGHTING - Refer to Fig. 22

1. Ensure that the gas and electrical supplies to the boiler are off.
2. Turn on the gas and electrical supplies to the boiler.
3. Ensure all external controls are calling for heat.
   If the optional Clock is fitted, set the time and ensure the Clock is in an 'on' mode.
4. Set the central heating thermostat to maximum.
5. Set the selector switch to 'ON'. The boiler will now run. The external pump will start, the fan will start and the main gas valve solenoid will open allowing the main burner to light.

5.5 CHECK THE BURNER PRESSURES - Figs. 23, 24

Turn the boiler off. Remove the two pressure test point screws at the top of the boiler and connect a differential pressure gauge to P1 and P2 as shown in Fig 23. Allow the boiler to run for 10 minutes and check the differential burner pressures.

1. Set the selector switch to 'ON'.
2. The burner will light at the ignition rate and will increase to the factory pre-set maximum output after approximately 4 minutes.

3. Turn off the boiler. Disconnect the pressure gauge and tighten the test point screws. Test for gas soundness using suitable leak detection fluid.

   Note: The burner pressure settings have been factory set and do not require adjusting. If incorrect, check that the inlet gas pressure is 20 mbar.

   If the inlet gas pressure is not 20 mbar, either the pipework is too small or the gas supply to the house is insufficient, in which case contact your gas supplier. If the differential burner pressures are still incorrect contact Alpha.

Note: Refer to Technical Data, Section 2.1 for the required differential burner pressures.

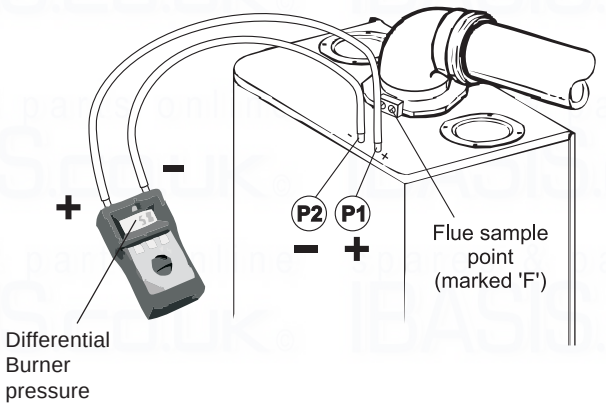

Fig. 23 **Fig. 24**

5.6 FINAL COMMISSIONING

1. Allow the heating system to heat up, then balance the system to achieve the necessary temperature difference across the heating flow and return pipes at the boiler.
2. Turn off the boiler.

5.7 FINAL ASSEMBLY

1. Raise the control panel and secure in position with the screws provided, locate the front casing panel in position and secure with the screw at the top of the panel.
2. If the boiler is to be left in service with the User, set the controls, clock (if fitted, see Clock User's Operating manual) and room thermostat (if fitted) to the User's requirements.
3. If the boiler is not to be handed over immediately, close the boiler gas service cock and switch off the electrical supply.
4. If there is any possibility of the boiler being left during frost conditions, then the boiler and system should be drained (refer to Section 8.2). It is recommended that a label is attached to the boiler drawing attention to the fact that the system has been drained.
5. Complete the details of the installation in the Benchmark Checklist on page 33.

5.8 USER INFORMATION

The User must be advised (and demonstrated if necessary) of the following important points:-

1. How to light and turn off the boiler and how to operate the system controls.
2. The importance of annual servicing of the boiler to ensure safe and efficient operation.
3. That any servicing or replacement of parts must only be carried out by CORGI registered personnel.
4. Ensure that the boiler controls and room thermostat (if fitted) are set to the User's requirements.
5. Tell the User that if the electrical supply is on and the boiler has not operated for 24 hours for heating, the pump will automatically operate for 5 minutes.
6. Explain to the User that an internal frost thermostat is fitted in the boiler, and that the electrical supply to the boiler must be left on for the thermostat to operate.
7. Explain to the User that in certain weather conditions the terminal will emit a plume of steam, i.e. water vapour. This is safe and quite normal.
8. Show the User the position of the condensate discharge pipe.
9. Hand the User's instructions to the User.
10. Ensure the Benchmark Checklist in Section 12, page 34, has been completed after the boiler has been installed and commissioned.
11. Leave these Installation and Servicing instructions with the User for use on future calls.

6 BOILER OPERATION

6.1 CENTRAL HEATING MODE

The operating sequence of the boiler is controlled by the selector switch on the control panel.

Setting the selector switch to position (2) the boiler will operate to provide central heating.

When the selector is set to central heating, it will respond to a demand for heat in the following sequence:-

a. The external pump will start, the fan will operate and the main burner will light.

b. The output of the burner is automatically controlled to suit the system demand.

c. When the temperature of the system water in the boiler reaches that set by the thermostat or the room thermostat is satisfied, the main burner is turned off and the fan stops after 50 seconds. The pump will continue to run to remove any residual heat from the boiler.

6.3 FROST THERMOSTAT

The boiler incorporates a built in frost thermostat which automatically turns on the boiler and pump if the water in the boiler falls below 8°C, providing the electrical supply is on and the selector switch is set to position (1) or position (2). The boiler will operate until the water temperature in the system reaches approximately 40°C.

6.4 PUMP

If the electrical supply is on and the boiler has not operated for 24 hours for heating or hot water, the external pump will operate automatically for five minutes every 24 hours.

6.5 INDICATOR NEONS

When neons A (red), B (red), C (yellow), D (green) are illuminated, the following conditions apply:-

Neon

D Illuminated continuously - Electricity supply to the boiler is on.

C Illuminated continuously - Burner is alight.

A Flashing on and off - Temperature sensor fault.

B Flashing on and off - Overheat thermostat has operated. Rotate selector switch to the reset position (3) to reset.

B Illuminated continuously - Burner has failed to light. Rotate selector switch to the reset position (3) and the ignition sequence will restart after a delay of about 30 seconds.

A and **B** Flashing on and off at the same time - Blocked flue or fan fault.

A Flashing and **B** Illuminated continuously - Pump fault or restricted flow.

A Illuminated continuously and **B** flashing - PCB or flame sensor fault.

A and **B** illuminated continuously - No flow or air present

A, **B** and **C** flashing on and off at the same time - Temperature sensor wiring or flow and return connections incorrect.

Note: Do not hold the selector switch in the reset position (3) for more than 2 to 3 seconds.

7 ROUTINE SERVICING

To ensure efficient operation of the boiler it is recommended that it is checked and serviced as necessary at regular intervals. The frequency of servicing will depend upon the particular installation conditions and usage, but in general once per year should be adequate.

It is the law that any service work must be carried out by a competent person, i.e. CORGI registered personnel.

Warning: Before servicing the boiler, isolate the electrical supply and close the boiler gas service cock. Allow the boiler to cool.

The data label is positioned on the underneath of the bottom casing.

Always test for gas soundness after servicing any gas carrying components.

Always carry out electrical system checks i.e. Earth Continuity, Resistance to Earth, Short Circuit and Polarity with a suitable meter after servicing.

7.1 IMPORTANT NOTES PRIOR TO SERVICING

1. Check the flue terminal outside and ensure it is not blocked.
2. Run the boiler and check the operation of its controls.
3. Refer to Fig. 2 for location of flue sampling point.
4. Ensure that all system connections and fittings are sound. Remake any joints and check the tightness of any fittings that may be leaking.
5. Check that the condensate trap drain pipe is connected and all joints are sound.
6. Record details of the service in the Service Record Section on back page of this manual and in the Benchmark Log Book.

7.2 PREPARE FOR SERVICING - Fig. 25

1. Ensure the electrical supply is isolated and the gas supply is off.
2. Remove the screw at the top centre of the front panel, then lift it up and remove the panel. Release the two screws securing the control panel and lower the panel.
3. Remove the six screws securing the room sealed chamber panel and remove the panel, taking care not to damage the seal.
4. Disconnect the gas supply pipe union.
5. Remove the two screws securing the fan assembly to the combustion chamber front.
6. Remove the two pressure tubes, noting their positions.
7. Disconnect the electrode lead from the ignition generator and the in-line connector to the flame sensing electrode.
8. Remove the six nuts and washers securing the combustion chamber front assembly and remove the assembly.

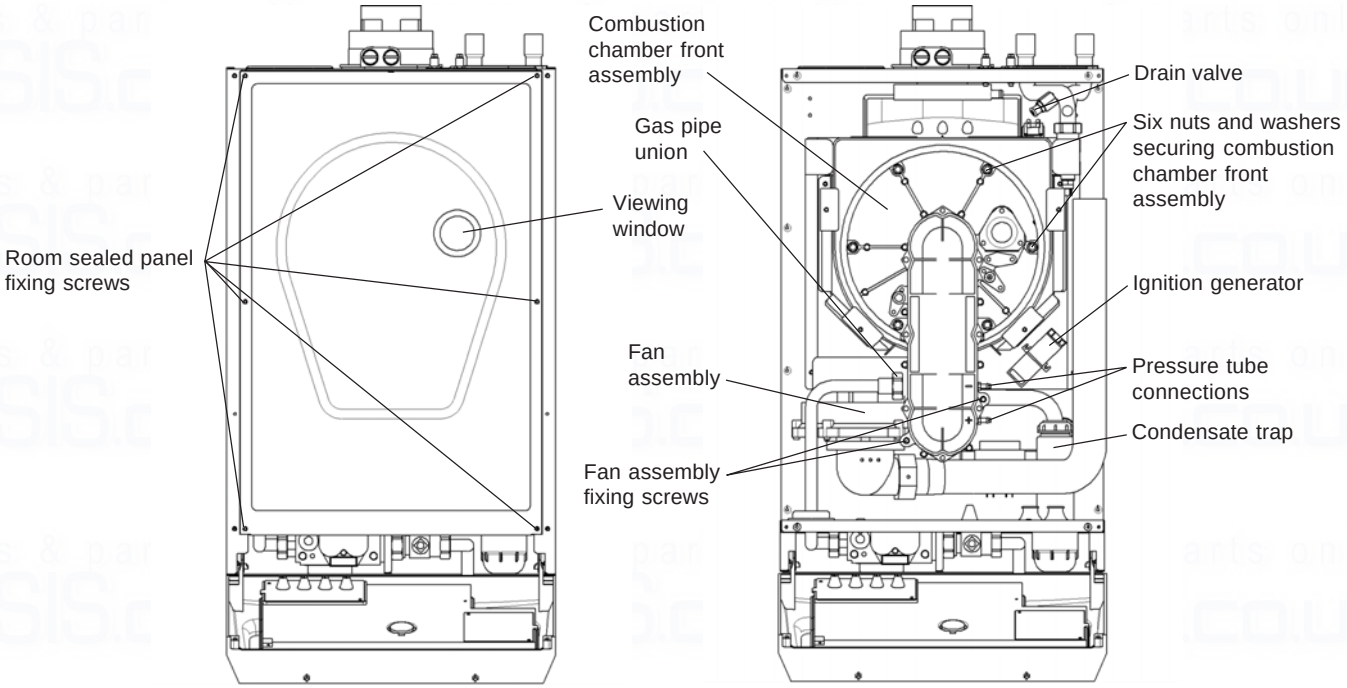

Fig. 25

7.3 CLEANING THE BOILER

1. Remove any deposits from heat exchanger using a suitable soft brush. Do not use a brush with metallic bristles.
2. Check the condition of the combustion chamber insulation panels. Any damaged panels must be replaced. (Refer to Component Replacement, Section 8.17).
3. Check the condition of the burner injector on the combustion chamber front assembly, carefully clean it with a soft brush if necessary.
   Do not use a brush with metallic bristles as this might damage the injector.
4. Remove any deposits from the heat exchanger coils. This can be done by suction or water sprayed onto the coils. Ensure all electrical components are protected from water. Any water used to clean the heat exchanger will drain to the condensate trap.
5. Unscrew and replace the injector if it appears damaged.

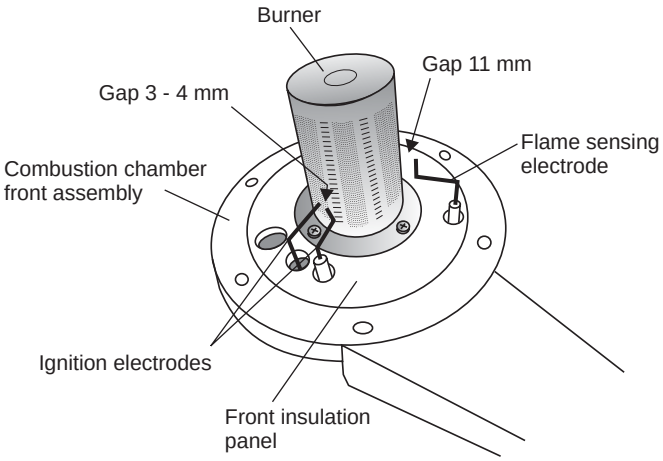

Fig. 26

6. Remove the four screws securing the burner (see Fig. 26) and remove the burner. Clean the burner with a soft brush and check that the flame ports are clear. Blockages may be removed with a stiffer brush. Tap the burner, open end down, to remove any deposits from inside.
7. Check the condition of the electrodes.
9. Check the spark gap, positioning and height of the electrodes. See Fig. 26.
10. Unscrew the condensate trap drain cap, clean and remove any deposits from the trap.
    Note: Before removing the cap, ensure that the water released from the trap can be contained to avoid spillage.
    The trap will contain no more than 200 cc of condensate water. Replace the drain cap.

7.4 RE-ASSEMBLE THE BOILER

1. Replace the burner, ensuring it is located correctly and secure it in position using the four screws previously removed.

   Important: Before replacing the combustion chamber front assembly, pour at least 200 cc of water into the coils of the heat exchanger. This is to ensure the condensate trap is full of water before operating the boiler.
2. Replace the combustion chamber front assembly, ensuring it is correctly located.
3. Ensure the electrode lead is connected and the seal is in position in the bottom of the room sealed chamber.
4. Test the connections for gas soundness and re-commission, Sections 5.4 and 5.5.
5. Ensure that the room sealed chamber panel seal is intact and in position, replace the panel ensuring it has been located correctly and secure it in position with the screws previously removed.
6. Raise the control panel and secure in position with the two screws provided.
7. Replace the front case panel and secure in position.
8. Check the operation of the boiler. (Refer to Boiler Operation, Section 6).
9. Return all controls to their original settings.

8 COMPONENT REPLACEMENT

It is the law that any service work must be carried out by a competent person, i.e. CORGI registered personnel.

Warning: Before replacing any boiler components, isolate the electrical supply and close the boiler gas service cock. Allow the boiler to cool.

Always test for gas soundness after replacing any gas carrying components or disturbing any gas connections.

Always carry out electrical system checks i.e. Eart Continuity, Resistance to Earth, Short Circuit and Polarity with a suitable meter after servicing.

Check the operation of the boiler. (Refer to Boiler Operation, Section 6).

Ensure that all the controls are returned to their original settings.

The replacement of components in Sections 8.3 to 8.15 does not require draining of the boiler.

8.1 GENERAL ACCESS - Fig. 25

Isolate the electrical supply and close the boiler gas cock (see Fig. 13).

1. **If access is required behind the control panel -** Release the fixing screw located at the top of the case front panel and lift the panel upwards from its locating pins and then forwards from the boiler. Remove the two fixing screws that secure the control panel and lower the panel.
2. **To gain access to the control panel components -** Remove the five screws securing the rear cover and carefully raise the cover from the control panel. When replacing the cover, ensure no wires are trapped and all wiring is secured. Secure with screws previously removed - do not overtighten.
3. **To gain access behind the room sealed chamber panel -** Remove the six screws securing the room sealed chamber panel and remove the panel, taking care not to damage the seal.
   Note: When replacing the panel, ensure the seal is intact and that the panel has been located correctly.

8.2 DRAINING THE BOILER - Refer to Figs. 2 or 25

1. Isolate the electricity supply and close the boiler gas service cock (see Fig. 13). Allow the boiler to cool.
2. Gain access as described in Section 8.1. Connect a hose to the drain valve located in the flow pipe just above the heat exchanger (see Fig. 25) and route it to a suitable container. Open the drain valve.

   Note: Water will remain in the heat exchanger and care must be taken when removing it to prevent any electrical components from becoming wet.

8.3 ELECTRODES - See Fig. 26

Gain access behind the room sealed chamber panel as in Section 8.1.

1. **Ignition electrode and lead**
   Disconnect the lead from the ignition generator, noting its position.
   Remove the two screws securing the electrode to the front of the combustion chamber and carefully withdraw the electrode.
2. **Flame sensing electrode and lead**
   Remove the grommet in the bottom of the chamber, disconnect the flame sensing electrode in-line connector and withdraw the lead.
   Remove the two screws securing the electrode to the front of the combustion chamber and carefully withdraw the electrode.
3. **Ignition electrode**
   Remove the two screws securing the electrode to the front of the combustion chamber and carefully withdraw the electrode.

Re-assemble in reverse order

8.4 MAIN BURNER - Fig. 26

1. Remove the burner assembly as described in Routine Servicing, Section 7.2.
2. Remove the four screws securing the burner to the combustion chamber front assembly.
3. Re-assemble with a new burner as described in Routine Servicing, Section 7.4.

8.5 BURNER INJECTOR - Fig. 25

1. Gain access behind the room sealed chamber panel as described in Section 8.1.
2. Undo the gas inlet pipe union to the combustion chamber front to gain access.
3. Unscrew the damaged injector and screw in a replacement.
4. Re-assemble in reverse order.

8.6 FAN - Fig. 27

1. Gain access behind the room sealed chamber panel as described in Section 8.1 and remove the combustion chamber front assembly as described in Section 7.2.
2. Remove the screw securing the air inlet tube and remove.
3. Disconnect the fan wiring and remove the fan.
4. Remove the inlet and outlet flanges from the fan, fit them to the new fan and re-assemble in reverse order. Ensure that the pressure tubes are connected correctly.
5. Re-assemble and test the boiler as described in Routine Servicing, Section 7.4 paragraphs 5 to 9.

8.7 IGNITION GENERATOR - Fig. 27

1. Gain access behind the room sealed chamber panel as described in Section 8.1.
2. Disconnect all the wiring from the ignition generator.
3. Remove the two screws securing the generator and remove.
4. Secure the new generator in position and re-connect the wiring.
5. Re-assemble in reverse order.

8.8 TRANSFORMER - Fig. 27

1. Gain access behind the room sealed chamber panel as described in Section 8.1.
2. Remove the screw securing the air inlet tube and remove.
3. Remove the two screws securing the transformer and remove the transformer.
4. Disconnect all of the wiring from the transformer noting their position.
5. Fit the new transformer and re-assemble in reverse order.

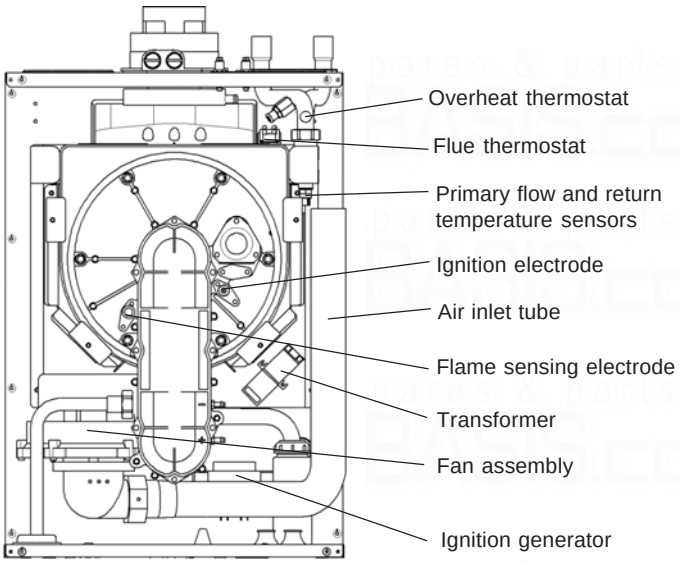

Fig. 27

8.9 OVERHEAT THERMOSTAT - Fig. 27

1. Gain access behind the room sealed chamber panel as described in Section 8.1.
2. Disconnect the wiring from the overheat thermostat.
3. Unscrew and remove the overheat thermostat from the heat exchanger.
4. Fit the new overheat thermostat taking care not to cross thread it and re-assemble in reverse order.

8.10 FLUE THERMOSTAT - Fig. 27

1. Gain access behind the room sealed chamber panel as described in Section 8.1.
2. Remove the two screws securing the thermostat retaining bracket and remove the thermostat from the top rear of the heat exchanger.
3. Disconnect the wiring.
4. Fit the new thermostat and re-assemble in reverse order.

8.11 GAS VALVE

1. The gas valve is located at the bottom of the boiler (see Fig. 13).
2. Disconnect the pressure tube from the gas valve.
3. Loosen the screw securing the electrical plug and remove the plug.
4. Disconnect the burner manifold union and the gas pipe union.
5. Remove the support bracket screws from beneath the boiler.
6. Lower the valve downwards and out of its location.
7. Unscrew the support bracket from the faulty valve and fit it to the new valve.
8. Fit the new assembly and re-assemble in reverse order.
9. Carry out a soundness test. Light the boiler and set the gas valve to the settings stated on the instruction sheet provided with the new valve.

8.12 VIEWING WINDOW - Fig. 25

1. Gain access behind the casing as in Section 8.1.
2. Remove the rubber window frame and remove the damaged glass.
3. Re-assemble in reverse order with a new glass. Ensure the rubber frame is located correctly in the front panel.

8.13 TERMINAL BLOCK FUSE - Refer to Fig. 20

The fuse is located in the boiler terminal block.

1. Gain access as described in Installation, Section 4.8.
2. Lift out the fuse holder and remove the fuse. Fit a fast blow 2 A fuse as a replacement, ensuring that the holder snaps into position.
3. Re-assemble in reverse order, ensuring the terminal block is located correctly on the plastic pins.

8.14 PCB - Fig. 28

1. Gain access behind the control panel as described in Section 8.1.
2. Disconnect all the wiring connectors from the PCB.
3. Remove the four fixing screws and carefully withdraw the board from the switch spindles.
4. Re-assemble in reverse order. Refer to the wiring diagram in Section 9.1 for connections.
5. Light the boiler and adjust the PCB as described in the instructions supplied with the replacement PCB.

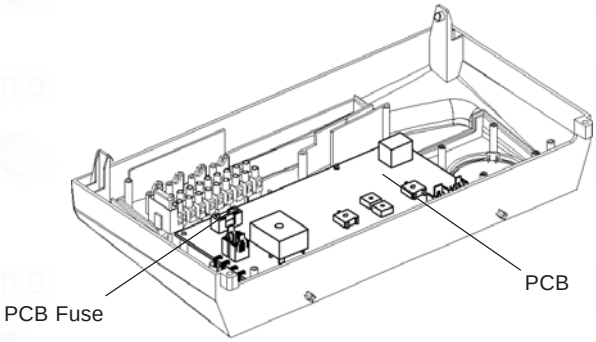

Fig. 28

8.15 CLOCK (if fitted) - Refer to Fig. 21

Note: For replacement only use an Alpha two channel clock. **Do not fit a single channel clock.**

1. Gain access behind the control panel as described in Section 8.1.
2. Remove the two screws securing the clock cover at the rear of the control panel.
3. Disconnect the wiring from the clock.
4. Remove the clock retaining screws and withdraw the clock from the control panel.
5. Fit the new clock, and connect the wires as follows:-
   Brown wire to terminal 1, Blue wire to terminal 2, Black wire to terminal 3, Grey wire to terminal 4 and White wire to terminal 5, (or as per the instructions supplied with the clock).
6. Re-assemble in reverse order. Refer to the User's instructions and the boiler's control cover to set the clock.

8.16 PRIMARY HEAT EXCHANGER - See Fig. 29

1. Gain access behind the room sealed chamber panel as described in Section 8.1 and drain the boiler as described in Section 8.2.
2. Disconnect the gas inlet union from the combustion chamber manifold.
3. Remove the two screws and six nuts and washers securing the combustion chamber front burner assembly and remove.
4. Remove the overheat thermostat (Section 8.9), flue thermostat (Section 8.10) and unplug the primary temperature sensors (Section 8.18).
5. Disconnect the condensate drain union.
6. Undo the ¾ " flow and return unions.
7. Remove the four screws securing the heat exchanger retaining brackets and remove the brackets.
8. Slide the heat exchanger forwards from its mounting, being cafeul not to spill any water onto any electrical components
9. Empty the water from the heat exchanger, remove the two temperature sensors and transfer them to the new heat exchanger.
9. Fit the new heat exchanger to the boiler and re-assemble in reverse order,

Refill the system. (Refer to Commissioning, Section 5.1).

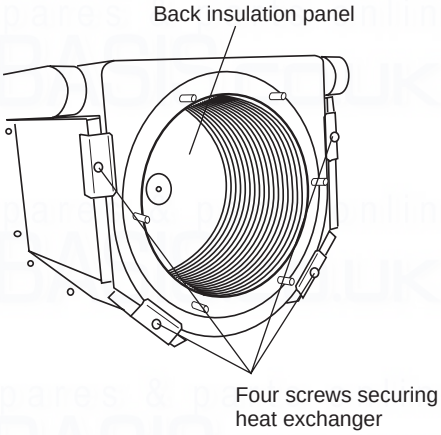

Fig. 29

8.17 COMBUSTION CHAMBER INSULATION

Gain access to the combustion chamber as described in Section 8.1.

Front insulation - see Fig. 26

1. Remove the electrodes from the combustion chamber front as described in Section 8.3.
2. Remove the four screws securing the burner.
3. Carefully remove the insulation.

Back insulation - see Fig. 29

1. Remove the combustion chamber front/burner assembly.
2. Remove the centre screw retaining the insulation.
3. Carefully remove the insulation, suction applied to the centre of the insulation will aid this.

Fit a new panel and re-assemble in reverse order.

Refill the system. (Refer to Commissioning, Section 5.1).

8.18 TEMPERATURE SENSORS - Refer to Fig. 27

Note that both sensors are the same.

1. Gain access as described in Section 8.1 and drain as described in Section 8.2.
2. Remove the screw securing the air inlet tube and remove.
3. The primary sensors are positioned on the right hand side of the heat exchanger (see Fig. 27), flow at the front and return at the rear. Disconnect the wiring and unscrew the sensor using a 13 mm A/F socket spanner, (access to the return sensor will be improved by removing the right side panel).
4. Re-assemble in reverse order with a new sensor and sealing washer.

Refill the system. (Refer to Commissioning, Section 5.1).

8.19 CONDENSATE TRAP - Fig. 13

1. Gain access behind the room sealed chamber as described in Section 8.1.
2. Disconnect the inlet and drain connection of the condensate trap.
3. Remove the fixing screw and lift the trap from its location.
4. Fill the new trap with water and fit it to the boiler and re-assemble in reverse order.

9 WIRING DIAGRAMS

9.1 ILLUSTRATED WIRING DIAGRAM

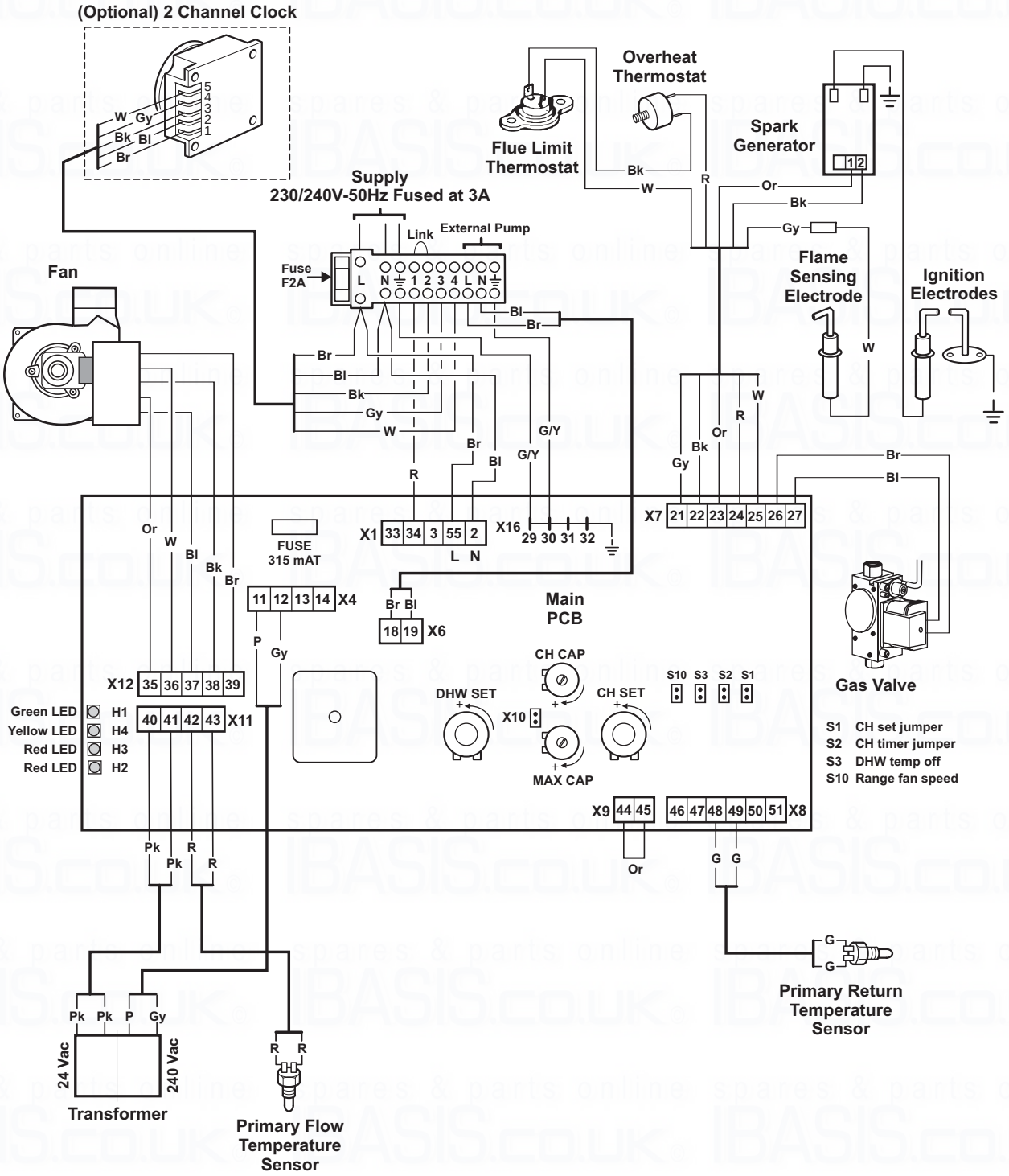

Br - Brown
Bk - Black
Bl - Blue
R - Red
Or - Orange
G - Green
G/Y - Green/Yellow
W - White
Gy - Grey
Pk - Pink
P - Purple

NOTE: TO CONNECT EXTERNAL CONTROL REMOVE LINK FROM TERMINALS 1 & 2 AND CONNECT 230/240 V SWITCHED LIVE TO TERMINAL1.

A FROST THERMOSTAT IS INCORPORATED WITHIN THE MAIN PCB

9.2 FUNCTIONAL FLOW WIRING DIAGRAM

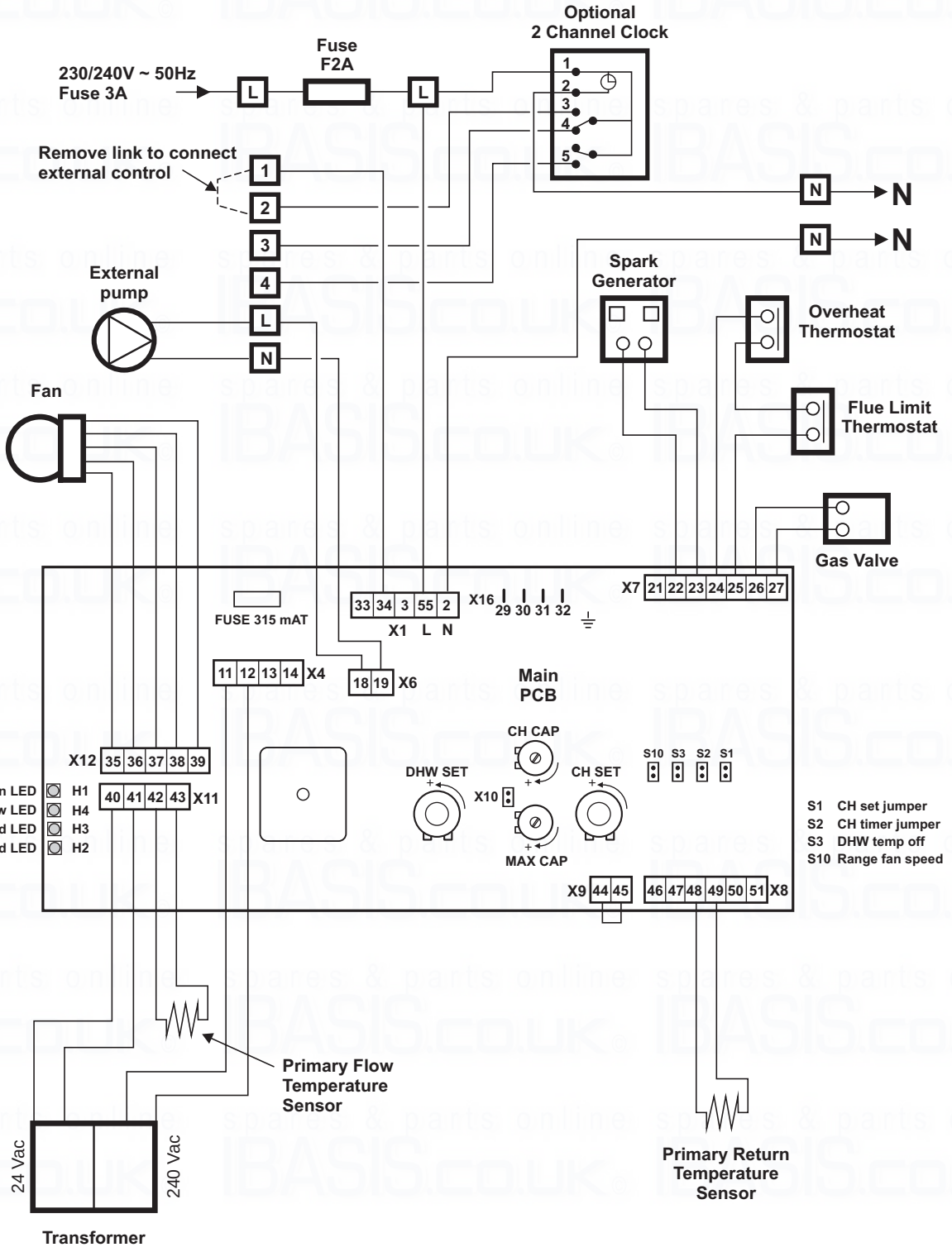

Note: ☐ Main Terminal Block

TO CONNECT EXTERNAL CONTROL REMOVE LINK FROM TERMINALS 1 AND 2 AND CONNECT 230/240 V SWITCHED LIVE TO TERMINAL 1.

10 FAULT FINDING

10.1 CARRY OUT INITIAL FAULT FINDING CHECKS

1. Check that gas, water and electrical supplies are available at the boiler.
   i.e. Inlet gas pressure = 20 mbar
   Electrical supply = 230/240 V ~ 50 Hz
   CH water system pressurised to between 0.75 and 1.25 bar, if installed in a sealed central heating system.
2. Carry out electrical system checks, i.e. Earth Continuity, Resistance to Earth, Short Circuit and Polarity with a suitable meter.
   Note: These checks must be repeated after any servicing or fault finding.
3. Ensure all external controls are calling for heat and check all external and internal fuses.
4. Check that the gas and water pipework has been connected to the correct connections on the boiler and all valves are open.

However, before any servicing or replacement of parts ensure the gas and electrical supplies are isolated.

10.2 CENTRAL HEATING - Follow operational sequence

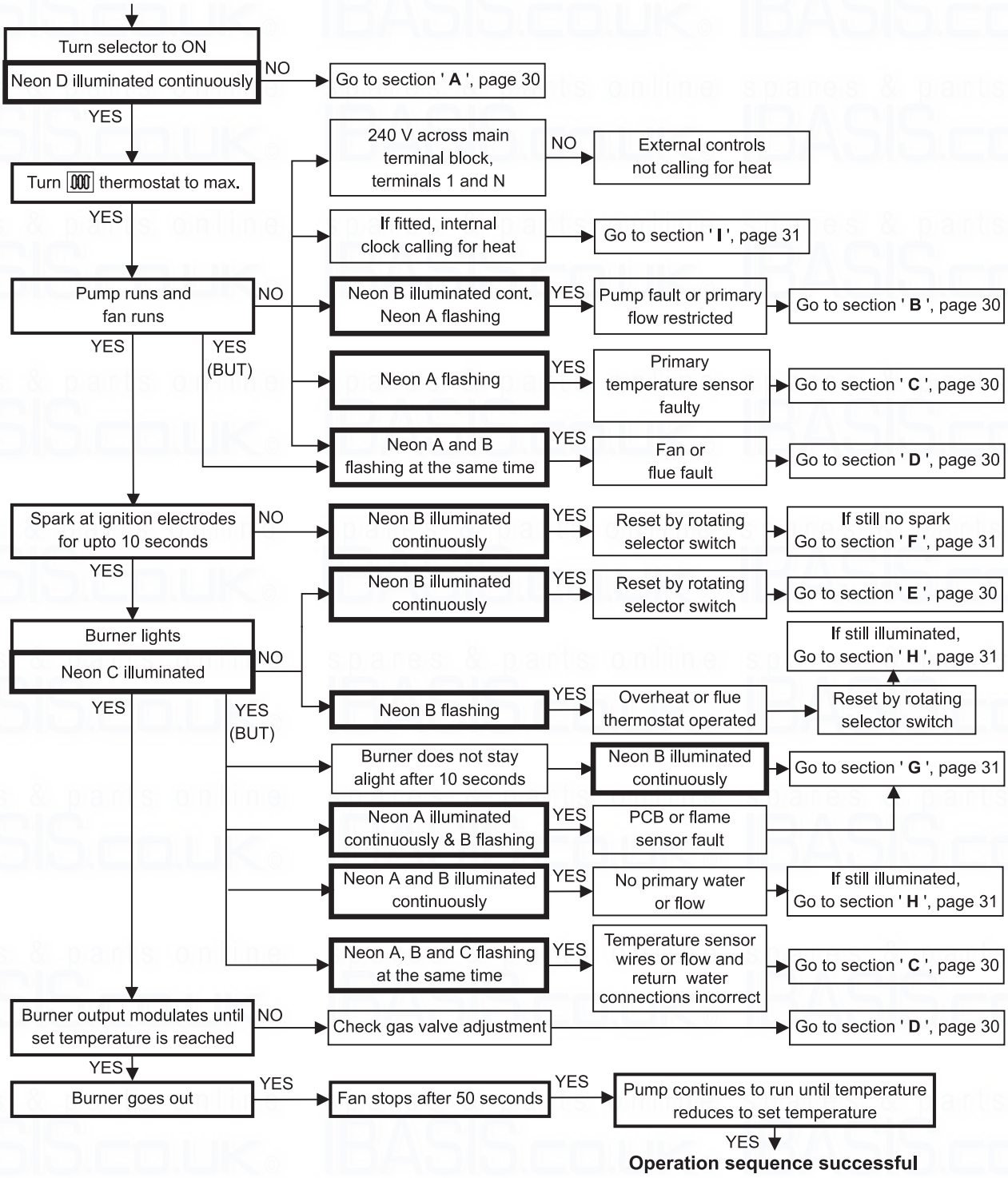

10.2 FAULT FINDING SOLUTIONS A to E

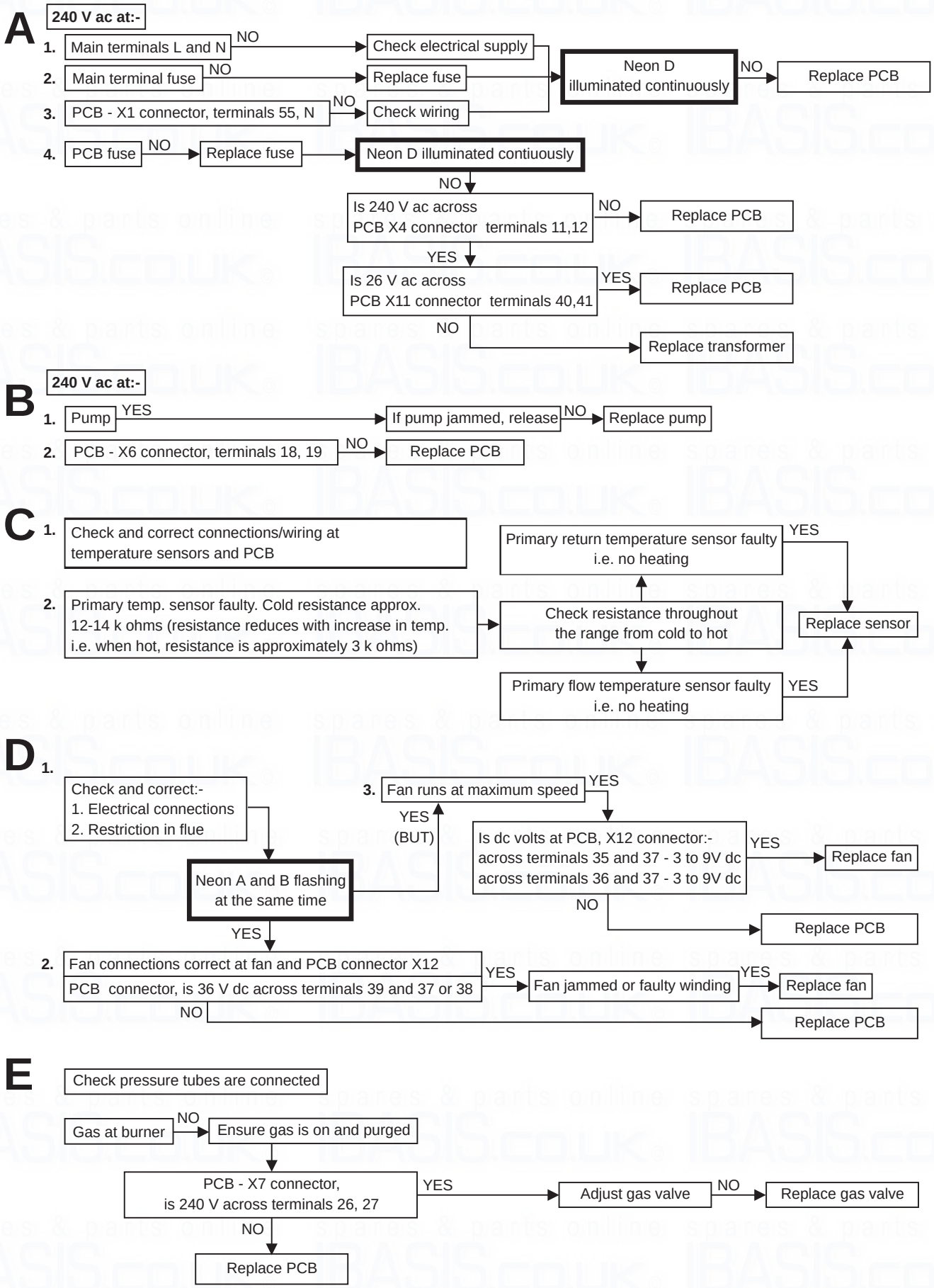

10.3 FAULT FINDING SOLUTIONS F to I

F

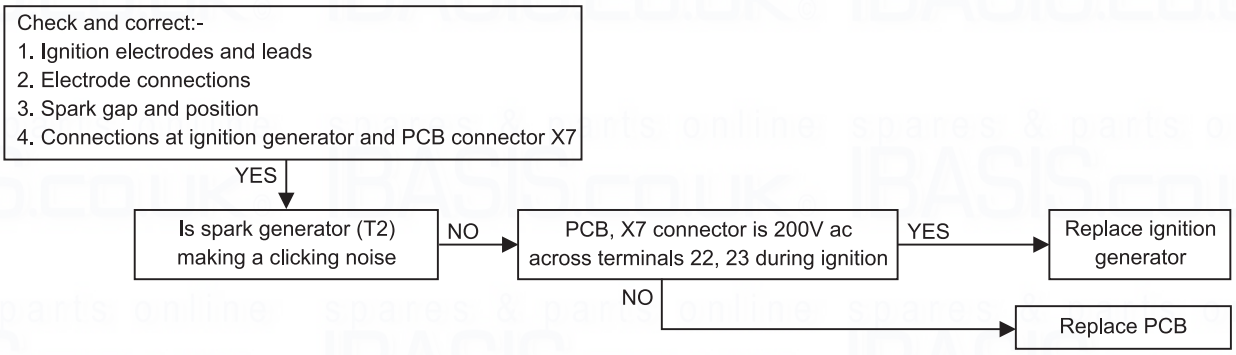

G

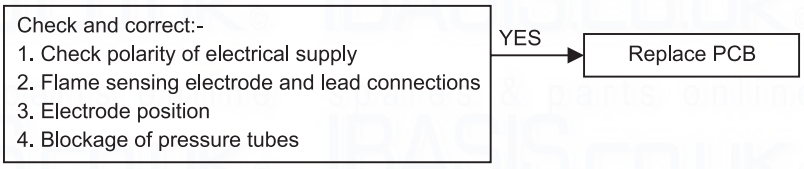

H

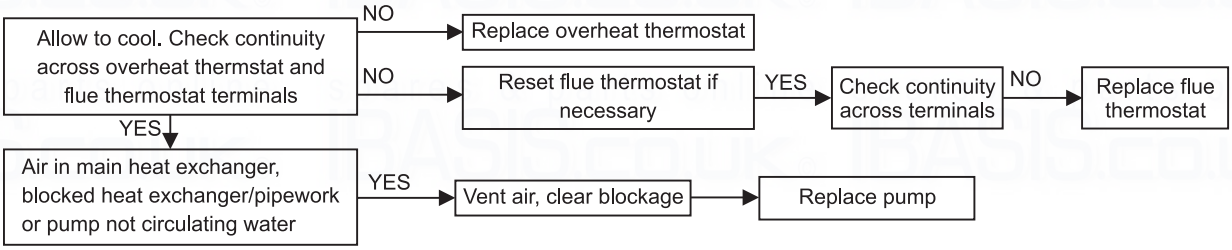

I

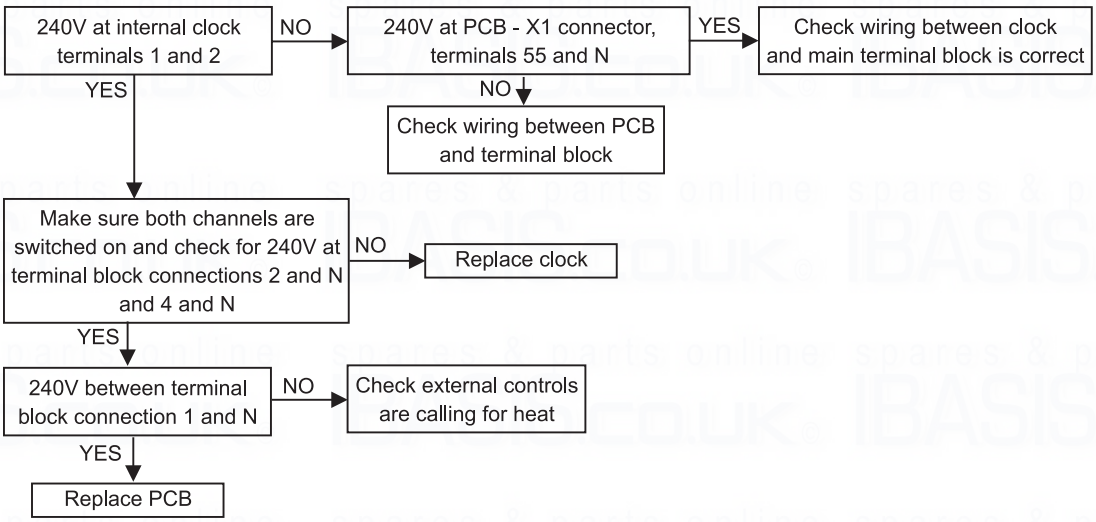

11 SHORT PARTS LIST

Reference	Description	Qty.	Alpha Pt. No.	British Gas GC No.
Fig. 26	Burner - CD13R/18R	1	1.021877	H28-392
Fig. 26	Burner - CD24R	1	1.013172	E94-407
Fig. 2	Main injector 5.1 mm (CD13R/18R)	1	1.022472	H28-393
Fig.2	Main injector 5.25 mm (CD24R)	1	1.022709	
Fig. 29	Primary heat exchanger - CD13R/18R	1	1.021521	H28-394
Fig. 29	Primary heat exchanger - CD24R	1	1.019725	
Fig. 24	Gas valve - Dungs	1	1.018808	H28-395
Fig. 25	Fan assembly	1	1.021206	H28-396
Fig. 28	PCB	1	1.027267	H28-397
Fig. 27	Flue thermostat (102°C)	1	1.023071	E94-413
Fig. 27	Ignition generator	1	1.018162	E94-414
Fig. 27	Transformer	1	1.012477	E94-415
Figs. 2 and 27	Temperature sensor	2	1.015970	E76-317
Fig. 20	Fuse F2A	1	1.6098	E76-378
Fig. 28	PCB fuse F315mA	1	1.013931	E96-571
Fig. 27	Overheat thermostat (90°C)	1	1.010952	H28-398
Fig. 27	Ignition electrode and lead	1	3.013626	E94-417
Fig. 26	Ignition electrode	1	1.016779	E94-418
Fig. 27	Flame sensing electrode and lead	1	1.019293	E96-572
Fig. 26	Combustion chamber insulation panel front	1	1.014732	E94-420
Fig. 25	Condensate trap	1	3.016875	

12 benchmark CHECKLIST

Ensure the following is completed after the boiler has been installed and commissioned:-

BOILER SERIAL No. ..... NOTIFICATION No. .....

***CONTROLS** To comply with the Building Regulations, each section must have a tick in one or other of the boxes*

Time & temperature control to heating	room t/stat & programmer/timer	☐	Programmable roomstat	☐
Time & temperature control to hot water	cylinder t/stat & programmer/timer	☐	Combi boiler	☐
Heating zone valves	Fitted	☐	Not required	☐
Hot water zone valves	Fitted	☐	Not required	☐
Thermostatic radiator valves	Fitted	☐		
Automatic by-pass to system	Fitted	☐	Not required	☐

FOR ALL BOILERS CONFIRM THE FOLLOWING:

The system has been flushed in accordance with the boiler manufacturer's instructions? ☐ Yes ☐ No

The system cleaner used .....

The inhibitor used .....

FOR CENTRAL HEATING MODE, MEASURE AND RECORD THE FOLLOWING:

Gas rate	☐	m^3/hr	☐	ft^3/hr
Burner operating pressure (if applicable)	☐	N/A	☐	mbar
Central heating flow temperature			☐	°C
Central heating return temperature			☐	°C

FOR COMBINATION BOILERS ONLY

Has a water scale reducer been fitted? ☐ Yes ☐ No

What type of scale reducer has been fitted? .....

FOR DOMESTIC HOT WATER MODE, MEASURE AND RECORD THE FOLLOWING:

Gas rate	☐	m^3/hr	☐	ft^3/hr
Maximum burner operating pressure (if applicable)	☐	N/A	☐	mbar
Cold water inlet temperature			☐	°C
Hot water outlet temperature			☐	°C
Water flow rate			☐	lts/min

FOR CONDENSING BOILERS ONLY CONFIRM THE FOLLOWING:

The condensate drain has been installed in accordance with the manufacturer's instructions? ☐ Yes

FOR ALL INSTALLATIONS CONFIRM THE FOLLOWING:

The heating and hot water system complies with current Building Regulations ☐ Yes

The appliance and associated equipment has been installed and commissioned in accordance with the manufacturer's instructions ☐ Yes

If required by the manufacturer, have you recorded a CO/CO_2 ratio reading ☐ N/A ☐ Yes ☐ CO/CO_2 ratio

The operation of the appliance and system controls have been demonstrated to the customer ☐ Yes

The manufacturer's literature has been left with the customer ☐ Yes

COMMISSIONING ENG'S NAME:

Print ..... CORGI ID No. .....

Sign ..... Date .....

13 SERVICE RECORD

It is recommended that your heating system is serviced regularly and that you complete the appropriate Service Interval Record below.

Service Provider: Before cpmpleting the appropriate Service Interval Record below, please ensure you have carried out the service as described in this instruction manual. Always use the manufacturer's specified spare parts when replacing all controls.

SERVICE 1: Date .....
Engineers Name .....
Company Name .....
Telephone No. .....
CORGI ID card serial No. .....
Comments .....
.....
Signature .....

SERVICE 2: Date .....
Engineers Name .....
Company Name .....
Telephone No. .....
CORGI ID card serial No. .....
Comments .....
.....
Signature .....

SERVICE 3: Date .....
Engineers Name .....
Company Name .....
Telephone No. .....
CORGI ID card serial No. .....
Comments .....
.....
Signature .....

SERVICE 4: Date .....
Engineers Name .....
Company Name .....
Telephone No. .....
CORGI ID card serial No. .....
Comments .....
.....
Signature .....

SERVICE 5: Date .....
Engineers Name .....
Company Name .....
Telephone No. .....
CORGI ID card serial No. .....
Comments .....
.....
Signature .....

SERVICE 6: Date .....
Engineers Name .....
Company Name .....
Telephone No. .....
CORGI ID card serial No. .....
Comments .....
.....
Signature .....

SERVICE 7: Date .....
Engineers Name .....
Company Name .....
Telephone No. .....
CORGI ID card serial No. .....
Comments .....
.....
Signature .....

SERVICE 8: Date .....
Engineers Name .....
Company Name .....
Telephone No. .....
CORGI ID card serial No. .....
Comments .....
.....
Signature .....

SERVICE 9: Date .....
Engineers Name .....
Company Name .....
Telephone No. .....
CORGI ID card serial No. .....
Comments .....
.....
Signature .....

SERVICE 10: Date .....
Engineers Name .....
Company Name .....
Telephone No. .....
CORGI ID card serial No. .....
Comments .....
.....
Signature .....

spares & parts online IBASIS.CO.UK

Alpha
HEATING INNOVATION
Alpha Therm Limited.
Nepicar House, London Road, Wrotham Heath,
Sevenoaks, Kent TN15 7RS
Tel: 0870 3001964
email: info@alphatherm.co.uk
website:www.alpha-innovation.co.uk

These instructions have been carefully prepared but we reserve the right to alter the specification at any time in the interest of product improvement.
© Alpha Therm Limited 2008.

Part No. 1.022777

Manual compiled and designed by Publications 2000 - Tel: (01670) 356211

11/08/D229