Installation and Servicing Instructions

Alpha CD18S/24S/30S

Wall Mounted, Fan Assisted, Room Sealed, Gas Fired, High Efficiency Condensing System Boiler Range

For Technical help or for Service call ...
ALPHA HELPLINE
Tel: 0870 3001964

Alpha BOILERS

Nepicar House, London Road,
Wrotham Heath, Sevenoaks,
Kent TN15 7RS

British Gas
Service Listed

CE 0085

Alpha CD18S	G.C. No. 41 532 06
Alpha CD24S	G.C. No. 41 532 02
Alpha CD30S	G.C. No. 41 532 08

GB

benchmark™

For use with Natural Gas only

Leave these instructions with the User

spares & parts online IBASIS.CO.UK

CONTENTS

1 Introduction 2
2 Technical data 3
3 General boiler information 6
4 Installation 12
5 Commissioning 18
6 Boiler operation 21
7 Routine servicing 22
8 Component replacement 24
9 Wiring diagrams 29
10 Fault finding 31
11 Short parts list 34
12 Benchmark Checklist 35
13 Service record 36

1 INTRODUCTION

The Alpha CD18S, 24S and 30S are high efficiency condensing, wall mounted, fan assisted, room-sealed system boilers. The burner is lit electronically and the heat output is controlled by a modulating fan and gas valve.

These are system boilers providing heating only for sealed central heating systems.

The boiler is supplied with a pump, pressure relief valve, expansion vessel and pressure gauge fully assembled and tested. The boiler provides central heating, and is designed for use with a fully pumped, sealed and pressurised central heating system using only Natural gas.

The CD18S boiler is suitable for central heating loads of between 4.7 and 19.5 kW (16 050 and 66 500 Btu/h).

The CD24S boiler is suitable for central heating loads of between 4.7 and 25.4 kW (16 050 and 86 700 Btu/h).

The CD30S boiler is suitable for central heating loads of between 6.5 and 29.8 kW (22 200 and 101 700 Btu/h).

IMPORTANT

It is the law that all gas appliances are installed by a competent person, ie CORGI registered personnel, in accordance with the following recommendations:-

Current Gas Safety (Installation and Use) Regulations

All current Building Regulations issued by the Department of the Environment, i.e. Approved Document L1.

Building Standards (Scotland) (Consolidation) Regulations issued by the Scottish Development Department

Health & Safety Document No. 635 (The Electricity At Work Regulations 1989)

The installation should also be in accordance with the following British Standard Codes of Practice:-

BS 5440:1:2000	Flues
BS 5449:1990	Forced circulation hot water systems
BS 5546:2000	Installation of hot water supplies for domestic purposes
BS 6700:1997	Design, installation, testing and maintenance of services supplying water
BS 6798:2000	Installation of gas fired hot water boilers
BS 6891:1998	Gas installation
BS 7593:1992	Code of Practice for treatment of water in heating systems
BS 7671:2001	Requirements for electrical installations, IEE Wiring Regulations

Reference should be made to DEFRA document 'Guide to condensing boiler installation assessment procedures for dwellings'.

If installation is in a timber framed building, refer to the Institute of Gas Engineers document IGE/UP/7.

This appliance meets the requirements of IPX4D, ie degree of protection against moisture.

Failure to install this appliance correctly could lead to prosecution. It is in your own interest and that of safety to ensure that the law is complied with.

Manufacturer's instructions must **NOT** be taken in anyway as over-riding statutory obligations.

Notes: 1. Ensure that the Benchmark Checklist has been completed after the boiler has been installed and commissioned.

2. The boiler **must only** be used with Alpha CD condensing flue components.

2 TECHNICAL DATA

2.1 PERFORMANCE - NATURAL GAS *(CAT: I2H 2H - G20 - 20 mbar)*

Alpha CD18S

Central Heating			MAX.	MIN.
Heat Input (H_s)		kW	20.3	5.5
(Gross)		Btu/h	69 200	18 800
Heat Input (H_i)		kW	18.3	5.0
(Net)		Btu/h	62 400	17 000
Heat Output (H_s condensing)		kW	19.5	5.3
(50°C/30°C)		Btu/h	66 500	18 100
Heat Output (H_i non-condensing)		kW	18.1	4.7
(80°C/60°C)		Btu/h	61 800	16 050
Differential Burner	Room sealed chamber panel fitted	mbar	3.5	0.3
Pressure		in wg	1.4	0.12
Gas Rate		m³/h	1.93	0.52
		ft³/h	68.2	18.36

Alpha CD24S

Central Heating			MAX.	MIN.
Heat Input (H_s)		kW	26.4	5.5
(Gross)		Btu/h	90 100	18 800
Heat Input (H_i)		kW	24.0	5.0
(Net)		Btu/h	82 000	17 100
Heat Output (H_s condensing)		kW	25.4	5.3
(50°C/30°C)		Btu/h	86 700	18 100
Heat Output (H_i non-condensing)		kW	23.5	4.7
(80°C/60°C)		Btu/h	81 135	16 050
Differential Burner	Room sealed chamber panel fitted	mbar	5.78	0.35
Pressure		in wg	2.30	0.14
Gas Rate		m³/h	2.54	0.53
		ft³/h	89.7	18.7

Alpha CD30S

Central Heating			MAX.	MIN.
Heat Input (H_s)		kW	31.1	7.3
(Gross)		Btu/h	106 100	24 900
Heat Input (H_i)		kW	28.0	6.6
(Net)		Btu/h	95 550	22 500
Heat Output (H_s condensing)		kW	29.8	7.0
(50°C/30°C)		Btu/h	101 700	23 900
Heat Output (H_i non-condensing)		kW	28.0	6.5
(80°C/60°C)		Btu/h	95 500	22 200
Differential Burner	Room sealed chamber panel fitted	mbar	3.33	0.39
Pressure		in wg	1.33	0.16
Gas Rate		m³/h	2.98	0.69
		ft³/h	105.2	24.4

2.2 SYSTEM

Alpha CDS models

Central Heating (Sealed System)	
Max. Working System Pressure	2.5 bar
Min. System Pressure	0.5 bar
Max. System temperature	82°C
Pressure Relief Valve Setting	3 bar (44 PSI)
Expansion Vessel Size (pre-charge press.)	8 L at 0.8 bar
Flow Connection	22 mm
Return Connection	22 mm
Relief Valve Connection	15 mm
Recommended System Pressure (cold)	1.0 bar
CH Water Temp. (Approx. max.)	82°C (180°F)

2.3 COMPONENTS

Burner		Stainless steel
Main Heat exchanger		Stainless steel
Main Burner Injector	CD18/24	5.0 mm
	CD30	6.6 mm
Flue - Outer Duct		White
Flue - Inner Duct		Plastic

2.4 ELECTRICAL

Supply		230/240 V ~ 50 Hz
External Fuse		3 A
Power Consumption	CD18/24	130 W
	CD30	140 W
Internal Fuse		F2 A
Electrode Spark Gap		3 - 4 mm

2.5 INSTALLATION

Min. Clearances for Servicing (from casing)	Top	220 mm
	Bottom	250 mm
	Sides	5 mm
	Front	450 mm
Flue Terminal Size		100 mm Dia.
Flue Terminal Protruding		100 mm
Hole Size Required For Flue Assy.		110 mm Dia.
Lift Weight	CD18/24	46 kg
	CD30	48 kg

2.6 GENERAL

Case Dimensions		Height	850 mm
		Width	450 mm
	Depth	CD18/24	345 mm
	Depth	CD30	380 mm
Gas Connection		CD18	15 mm
		CD24/30	22 mm
Primary Water Content		CD18/24	2.5 L
		CD30	3.0 L
Air Duct Diameter			100 mm
Flue Duct Diameter			60 mm

2.7 FLUE LENGTHS

CD Easy-Flue 500 mm with terminal and 90° bend. A CD Easy-Flue 1000 mm with terminal and 90° bend is also available.
CD 750 mm and CD 1000 mm flue extensions are available.
Length of Flue Required:-

Rear Flue = wall thickness + 170 mm (includes terminal)
Side Flue = wall thickness + distance between wall and side of boiler + 230 mm (includes terminal)
Vertical Flue = distance from top of boiler side panel to required roof position minus 1 m for vertical terminal assembly

Maximum horizontal flue length = 12 m.
Maximum vertical flue length including terminal is 15 m.
Each additional CD 90° Bend is equivalent to 1.3 m of flue length.
Each CD 45° Bend is equivalent to 0.9 m of flue length.
The CD Vertical Flue terminal assembly is equivalent to 1 m of flue length.

2.8 AVAILABLE PUMP HEAD FOR CENTRAL HEATING

Output (50/30°C)		Available pump head		Flow rate	
kW	Btu/h	20°C		20°C	
		metres	feet	litre/min	gal/min
25.40	86 700	2.3	7.6	16.6	3.7
18.70	64 000	3.5	11.6	12.6	2.8
15.60	53 000	3.8	12.6	10.5	2.3
12.35	42 200	4.0	13.2	8.3	1.8
5.30	18 100	4.6	15.2	3.2	0.7

This information is based on 20°C system design temperature difference. **Note:** For outputs upto 30 kW refer to Section 3.7.

2.9 ELECTRICAL CONNECTIONS

Note: This Appliance Must Be Earthed
An optional integral two channel Clock kit (Part No. 6.1000220) is available if required.
Note: Only use the Alpha two channel clock. **Do not fit any single channel clocks.**

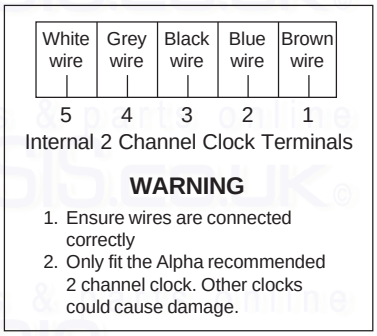

Clock connections

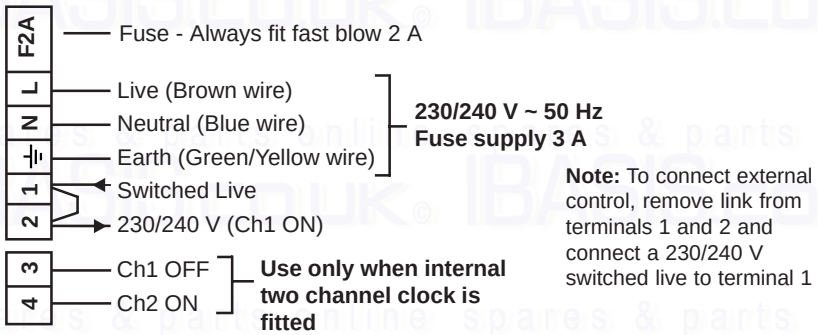

Boiler terminal block

Fig. 1

2.10 BOILER SCHEMATIC

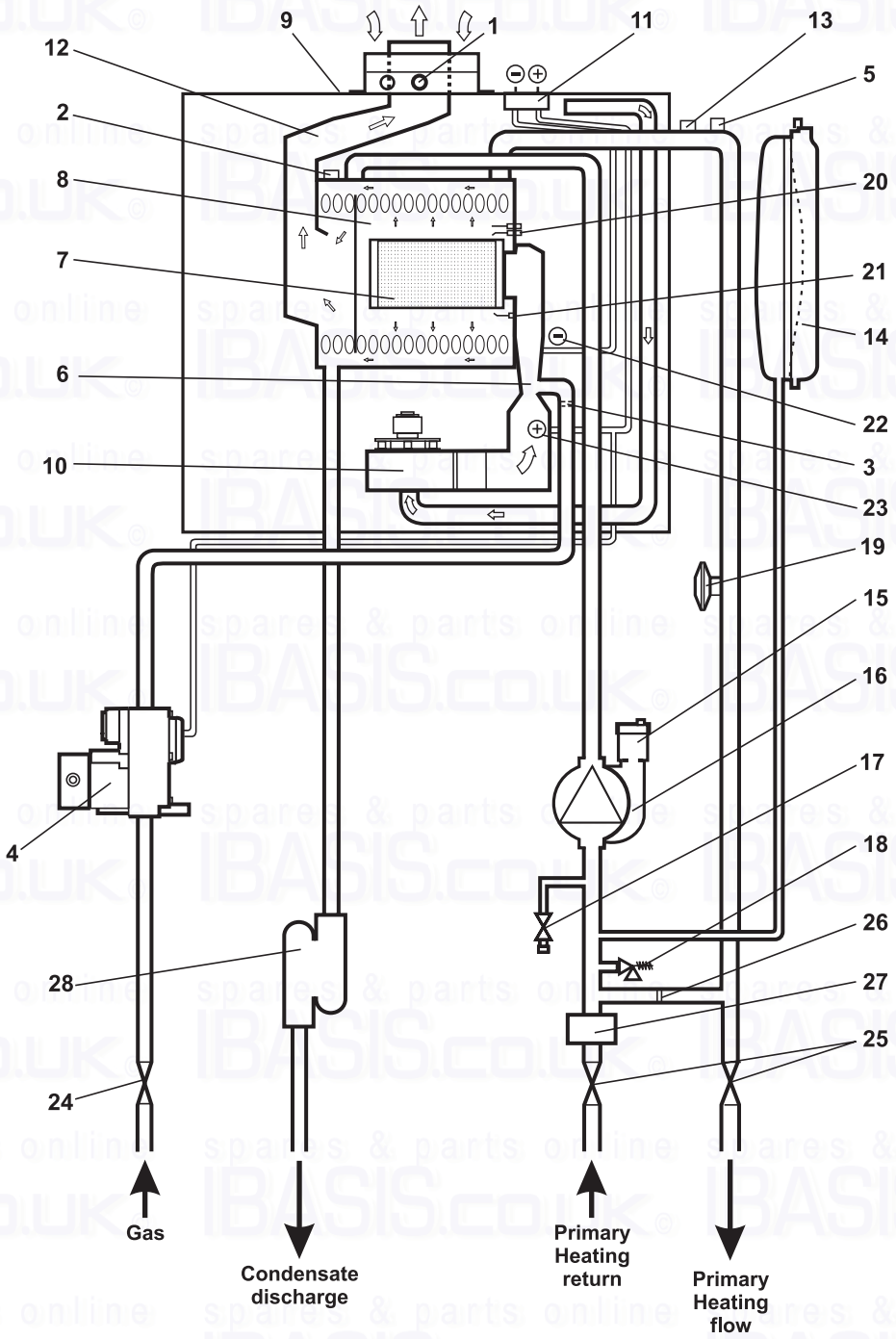

1	-	Flue sampling point	12	-	Flue hood	23	-	Venturi positive point
2	-	Flue thermostat	13	-	Overheat thermostat	24	-	Gas service cock
3	-	Injector	14	-	Expansion vessel	25	-	On/off valve (2 off)
4	-	Gas valve	15	-	Automatic air vent	26	-	Automatic by-pass
5	-	Primary temperature sensor	16	-	Pump	27	-	Cyclone separator
6	-	Venturi	17	-	Drain point	28	-	Condensate trap
7	-	Main burner	18	-	Pressure relief valve			
8	-	Primary/condensing heat exchanger	19	-	Primary pressure switch			
9	-	Room sealed chamber	20	-	Ignition electrodes			
10	-	Fan	21	-	Flame sensing electrode			
11	-	Pressure differential test points	22	-	Venturi negative point			

Fig. 2

3 GENERAL BOILER INFORMATION

3.1 GAS SUPPLY

The Alpha CD18S boiler requires a gas rate of 1.93 m³/h (68.2 ft³/h).

The Alpha CD24S boiler requires a gas rate of 2.54 m³/h (89.7 ft³/h).

The Alpha CD30S boiler requires a gas rate of 3.45 m³/h (121.8 ft³/h).

The meter and supply pipes must be capable of delivering this quantity of gas in addition to the demand from any other appliances in the house. The CD18S boiler requires at least a 15 mm gas supply pipe and the CD24/30S boilers require a 22 mm gas supply.

The complete installation, including the meter, must be tested for gas soundness and purged as described in BS 6891.

3.2 ELECTRICAL SUPPLY

The boiler requires a 230/240 V ~ 50 Hz mains supply, fused at 3 A

The boiler must be earthed.

There must only be one common isolator, providing complete electrical isolation, for the boiler and any external controls.

This boiler has been fitted with a supply cable, however, if it is necessary to fit a cable use PVC insulated cable not less than 0.75 mm² (24 x 0.2 mm) to BS 6500 Table 16. The boiler should be connected to a fused three pin plug and unswitched shuttered socket outlet (both complying with BS 1363), or a fused double pole switch with a contact separation of at least 3 mm in both poles.

Wiring external to the boiler must be in accordance with the current IEE Wiring Regulations (BS 7671).

Note: If a room thermostat is fitted, it must be suitable for 230/240 V switching.

3.3 AIR SUPPLY

The boiler does not require any air vents for cooling in the room in which it is installed or when installed in a cupboard or compartment. The minimum clearances for servicing must always be maintained.

Note: A cupboard or compartment used to enclose the boiler must be designed and constructed specifically for the purpose, i.e. comply with the Building Regulations.

3.4 FLUE SYSTEM - Fig. 3

The flue system must be installed in accordance with BS 5440:1.

For horizontal flues ensure the flue assembly is horizontal and the inner duct is sloping downwards towards the boiler.

Flue components are available as follows:-

CD Easy-Flue 500 mm (includes 90° bend and terminal) - Part No. 6.2000500.
CD Easy-Flue 1000 mm (includes 90° bend and terminal) - Part No. 6.20001000.
CD 0.75 m flue extension - Part No. 6.2000750.
CD 90° bend - Part No. 6.2000590.
CD 45° bend - Part No. 6.2000545.
CD Vertical flue terminal assembly. Refer to the separate installation instructions supplied with the assembly.

The following methods determine the correct length of flue required.

For rear exit flue (including terminal) L = B + 170 mm

For side exit flue (including terminal) L = B + C + 230 mm (min. side clearance required is 5 mm)

For vertical flue L = H minus 1000 mm for vertical terminal assembly

Where L = Required flue length
B = Finished wall thickness
C = Distance from the inside wall to the side of the boiler
H = Distance from top of boiler side panel to roof position

Note:
1. If an extra 90° bend is used, this reduces the maximum flue length by 1.3 m. Each 45° bend used reduces the maximum flue length by 0.9 m.
2. Under no circumstances must the flue length (including allowances for extra bends) exceed 12 metres horizontally and only 15 metres vertically.
3. Failure to use Alpha CD flue components with the boiler will invalidate the boilers CE approval, guarantee and may be unsafe.

HORIZONTAL FLUE OPTIONS - Lmax = 12 metres

L = B + C + 230 mm

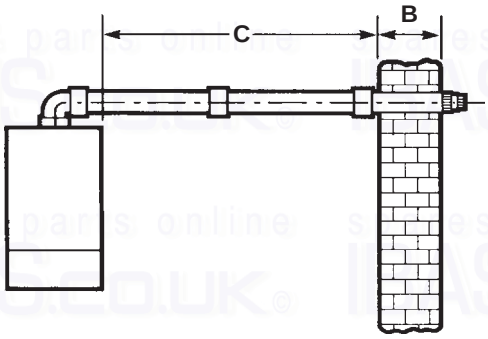

L = B + C + E + 230 mm

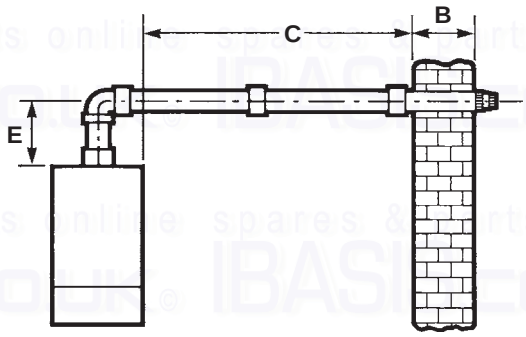

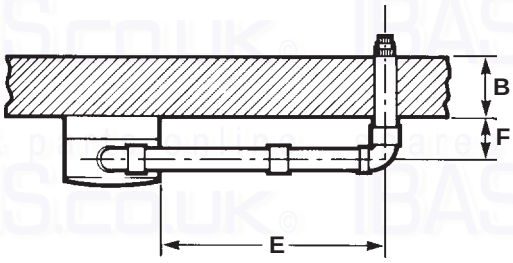

L = B + E + F + 230 mm + (90° bend = 1.3 metre)

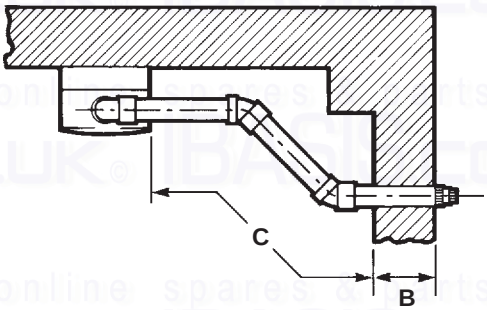

L = B + C + 230 mm + (2 x 45° bends = 1.8 metre)

VERTICAL FLUE OPTIONS

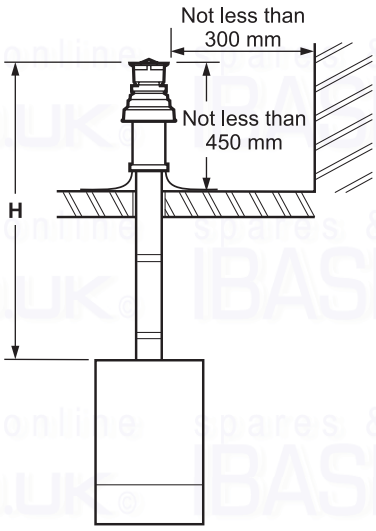

Hmax = 15 m

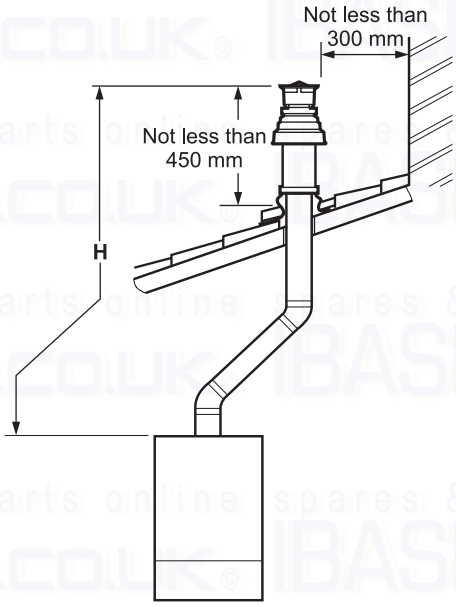

Hmax = 13.2 m

Fig. 3

3.5 FLUE TERMINAL LOCATION - Fig. 4

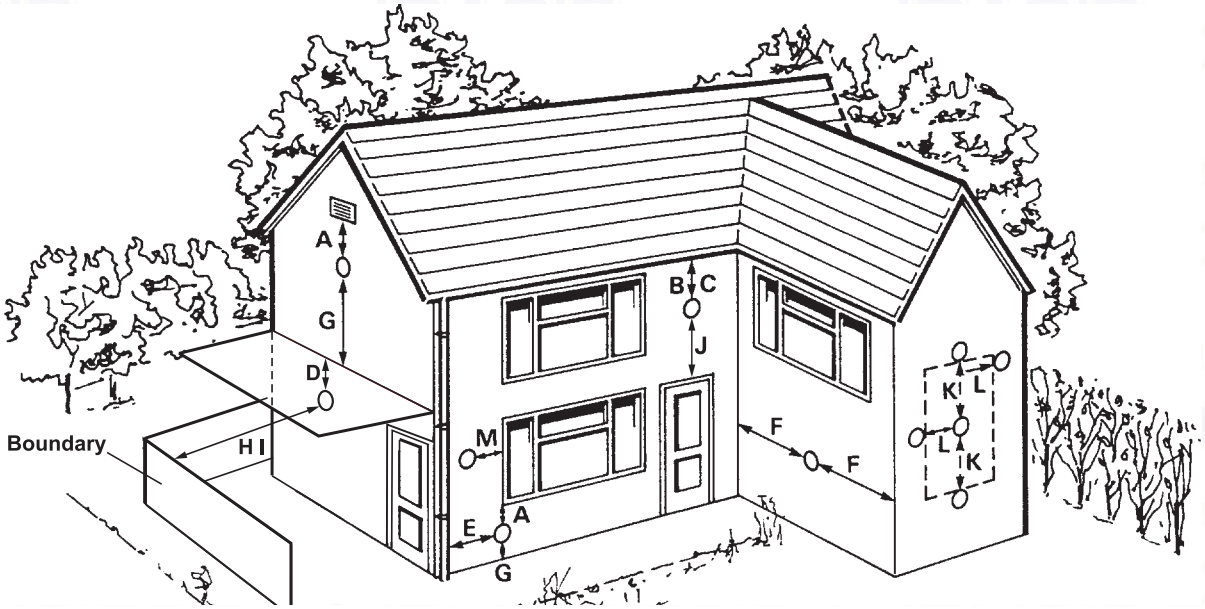

Fig. 4

	Terminal position	Min. distance (mm)
A	Directly below an opening, air brick, windows, etc.	300 (See Note 1)
B	Below gutters, soil pipes or drain pipes	75 (See Note 3)
C	Below eaves	200 (See Note 3)
D	Below balconies	200 (See Note 3)
E	From a vertical drain pipe or soil pipe	150 (See Note 3)
F	From an internal or external corner	300 (See Note 2)
G	Above ground, roof or balcony level	300
H	From a surface facing the terminal	600 (See Note 4)
I	From a terminal facing the terminal	1200 mm
J	Above an opening, air brick, window etc.	300 (See Note 1)
K	Vertically from a terminal on the same wall	1500 mm
L	Horizontally from a terminal on the same wall	300 mm
M	Horizontally from an opening, air brick, window etc.	300 mm (See Note 1)

Notes:
1. In addition, the terminal should not be nearer than 150 mm to the framework of an opening into the buiding, i.e. a window surround or door surround.
2. This clearance may be reduced to 25 mm without effecting the performance of the boiler. However, to ensure the condensate plume does not affect adjacent surfaces a clearance of 300 mm is preferable.
3. These clearances may be reduced to 25 mm without effecting the performance of the boiler. However, to ensure the condensate plume does not affect adjacent surfaces the terminal should be extended beyond gutters, pipes, eaves, balconies etc.
4. To reduce the possibility of nuisance to neighbouring buildings etc. it is recommended the terminal shouild not be less than 2500 mm from car parking spaces, building boundary walls, fences etc.

Note: A terminal must not be sited under a car port roof

Note: In certain weather conditions the terminal will emit a plume of steam. If possible avoid positioning the terminal where this may cause a nuisance, i.e. positions A, D, G, H, J or M.

The flue terminal must be exposed to the external air and the position must allow the free passage of air across it at all times.

If the terminal is fitted within 850 mm of a plastic or painted gutter or 450 mm of painted eaves, an aluminium shield at least 1 m long should be fitted to the underside of the gutter or painted surface. A terminal must not be sited below 2.1 m where people have access to, such as public footpaths, access routes, patios etc. However, If the terminal is fitted less than 2.1 m above a surface where there is no public access, the terminal must be protected by a terminal guard.
A suitable guard is available from Alpha Therm Ltd.

3.6 BOILER LOCATION

The boiler is not suitable for external installation unless it is installed within a purpose designed weatherproof building.

The boiler must be installed on a flat vertical wall which is capable of supporting the weight of the boiler. The boiler can be fitted to or adjacent to a wall comprising of a combustible material without the need for a special thermal insulation barrier.

If the boiler is to be fitted in a timber framed building, it should be fitted in accordance with the Institute of Gas Engineers 'Guide for Gas Installations in Timber Frame Housing', reference IGE/UP/7.

The boiler may be installed in any room or internal space, although particular attention is drawn to the requirements of the current IEE Wiring (BS7671) Regulations, and in Scotland, the electrical provisions of the Building Regulations applicable in Scotland, with respect to the installation of the boiler in a room or internal space containing a bath or shower. Where a room-sealed boiler is installed in a room containing a bath or shower, it must not be possible for a person using the bath or shower to touch any electrical switch or boiler control utilising mains electricity.

The boiler may be installed in a cupboard or compartment, provided it is correctly designed for that purpose, i.e. complies with the Building Regulations and the requirements of BS 6798.

3.7 CENTRAL HEATING SYSTEM - Fig. 5

The boiler is designed for use in a sealed central heating system in accordance with the requirements of BS 5449 and BS 6798. The system should be designed to operate with flow temperatures of up to 82°C. When designing the system, the pump head, expansion vessel size, mean radiator temperature, etc. must all be taken into account. Refer to the pump performance table for guidelines.

System volume - The expansion vessel incorporated into the boiler is suitable for a sealed heating system with a maximum water content of 80 litres (18 gal). Above 80 litres, consideration should be given to fitting an additional expansion vessel fitted in the position shown in Fig. 5. To check correct operation of the expansion vessel(s) the system pressure should not be more than 2.5 bar when the system is at maximum operating temperature (for further guidance refer to BS 7074:1).

The boiler is supplied with the following components built in:-

Pressure relief valve - complying with BS 6759 and set to operate at 3 bar. The discharge pipe must be routed clear of the boiler and terminated in such a manner that it can be seen, but cannot cause injury to persons or property.

Pressure gauge - To indicate the system pressure to be maintained.

Expansion vessel - Conforming to BS 4814 with a capacity of 8 litres and pre-charged to a pressure of 0.8 bar.

By-pass - The boiler incorporates a by-pass, however where all radiators are fitted with thermostatic radiator valves it is recommended a system by-pass, preferably automatic is fitted.

Cyclone - This is a device fitted in the heating return within the boiler to remove any foreign or solid matter etc. from the system.

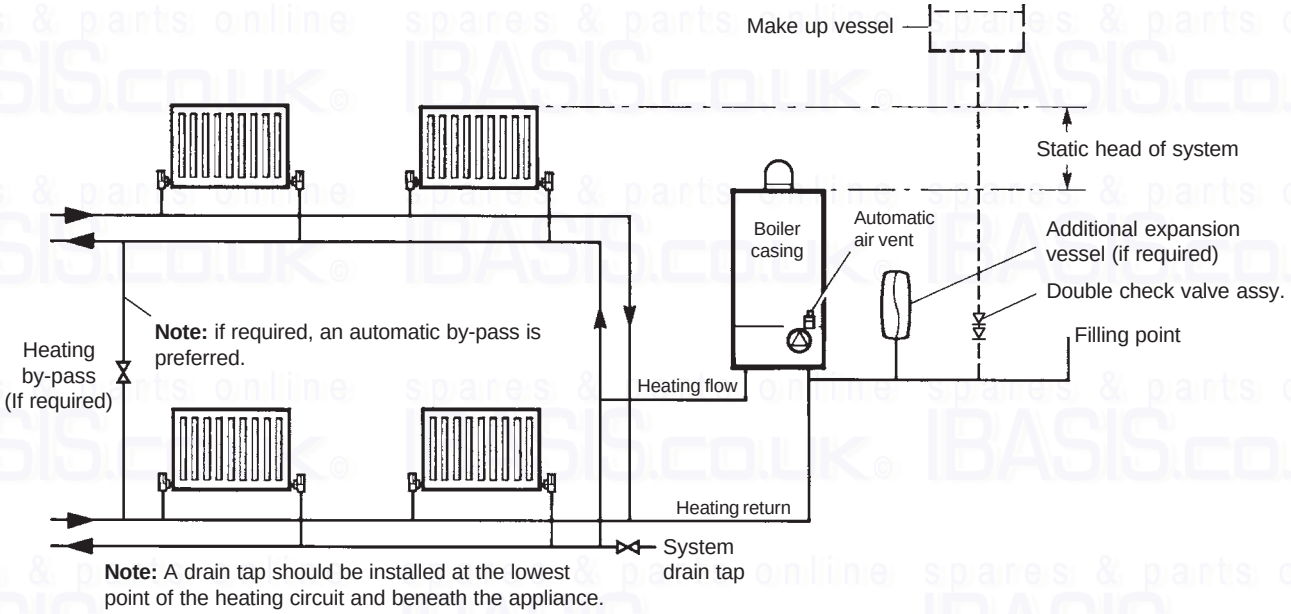

Fig. 5

3.8 FILLING THE CENTRAL HEATING SYSTEM - Figs. 6, 7

The system design pressure (cold) should be set to 1.0 bar. This pressure is equivalent to a static head (see Fig. 5) of 10.2 metres of water.

Provision should be made to replace water lost from the system. This can be by manual or automatic means, as shown in Figs. 6 and 7. The position for connecting an automatic make-up vessel is indicated in Fig. 5. A double check valve assembly must be used, as shown in Fig. 7.

Filling of the system must be carried out in a manner approved by the local Water Undertaking. Where allowed, the system may be filled via a temporary connection as shown in Fig. 6. After filling, always disconnect the flexible hose of the filling loop.

All fittings used in the system must be able to withstand pressures up to 3 bar.

Drain taps (to BS 2879) must be used to allow the system to be completely drained.

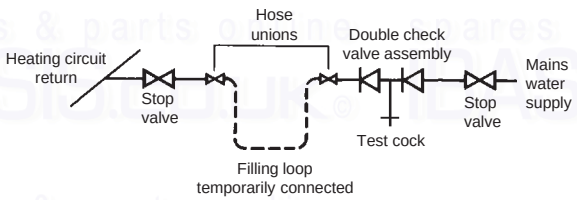

Fig. 6

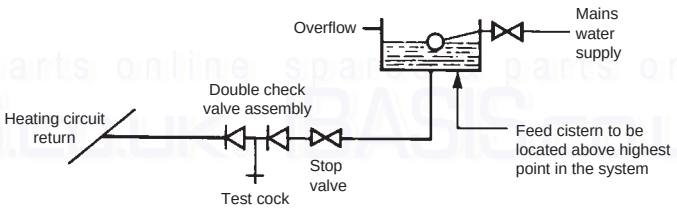

Fig. 7

3.9 FLUSHING THE HEATING SYSTEM

It is essential that the central heating system is thoroughly cleaned and flushed when fitting an Alpha CD boiler. Failure to do so will invalidate the warranty.

The primary condensing heat exchanger is constructed in stainless steel and therefore is compatible with most materials used in a heating system.

If a cleaning agent and inhibitor are used, they must be applied in accordance with their manufacturers instructions. Only products from Fernox and Sentinel are acceptable for use with the Alpha CD boilers. Further information can be obtained from Fernox (Tel: 0179 9521133) or Sentinel (Tel: 0151 4209563).

Although the Cyclone is fitted in the heating return on the boiler, the heating system should still be thoroughly flushed as detailed below. The Cyclone collection point should be emptied via the drain point (see Fig. 11) after flushing has been completed.

The system should be flushed in accordance with BS 7593 and BS 5449. The following procedures are recommended:

1. Installing onto a new system:-
   a. Fill the system, vent at high points, at pump and radiators.
   b. Check for leaks.
   c. Rapidly drain the system.
   d. If required, chemically clean the system as instructed by the recommended cleaner manufacturer.
      Note: Ensure that the system is flushed to remove any remains of the cleaner.
   e. If chemical cleaner is not used to clean the system:-
      i) Refill the system.
      ii) Switch on the boiler and allow the system to heat up to the normal operating temperature.
      iii) Rapidly drain the system while the water is still hot.
      iv) Refill the system.
   f. As required, add the recommended inhibitor to the system as instructed by the inhibitor manufacturer.
   g. Recheck for leaks.
2. Installing onto an existing system, clean the system before fitting the new boiler:-
   a. If the old boiler is still working:-
      i) Switch on the boiler and allow the system to heat up to the normal operating temperature.
      ii) Rapidly drain the system while the water is still hot.
      iii) Refill and chemically clean the system as instructed by the recommended cleaner manufacturer.
      iv) Ensure the system is flushed to remove any remains of the cleaner.
      v) Fit the new boiler.
   b. If the old boiler is not working:-
      i) Rapidly drain the system.
      ii) Remove the old boiler.
      iii) Flush the system through.
      iv) Fit the new boiler.
      v) Refill and chemically clean the system as instructed by the recommended cleaner manufacturer.
      vi) Ensure the system is flushed to remove any remains of the cleaner.
   c. As required, add the recommended inhibitor to the system as instructed by the inhibitor manufacturer.
   d. Check for leaks.

3.10 DISPOSAL OF CONDENSATE

Provision must be made for the safe disposal of condensate produced by the flue gases of the Alpha CD boilers and reference should be made to BS 6798: 2000 for the requirements on the disposal of condensate.

The boilers incorporate a condensate trap which has a seal of 75 mm, therefore no additional trap is required.

The condensate should ideally be discharged internally into an internal waste pipe (washing machine/sink waste) or soil pipe to avoid the possible risk of freezing. The pipework must be in 22 mm pipe.

External pipe runs should be avoided, but if it is necessary, the pipework should be at least 32 mm and protected from the risk of freezing with a waterproof insulation and the length should be kept to a maximum of 3 m. Termination should be into an external gulley or soakaway as shown in Figs. 8 and 9.

Note: All pipework must have a continuous fall (see Figs. 8 and 9) from the boiler and must be of an acid resistant material such as plastic waste pipe. (copper or steel is not suitable).

It should be noted that the connection of a condensate pipe to a drain may be subject to local building control requirements.

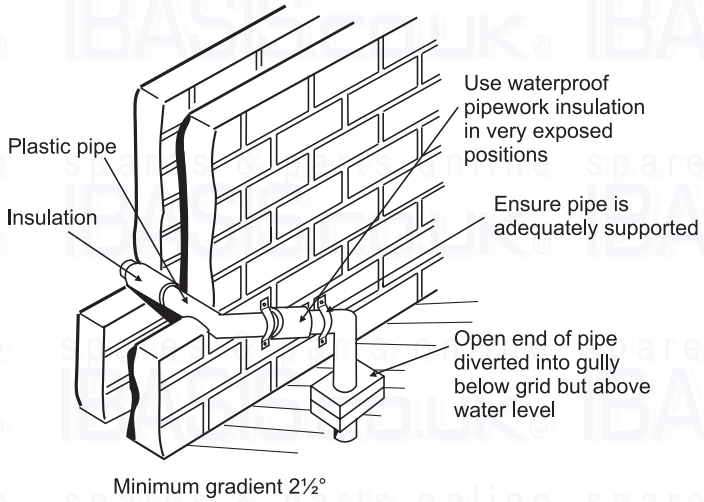

Fig. 8 - External gully

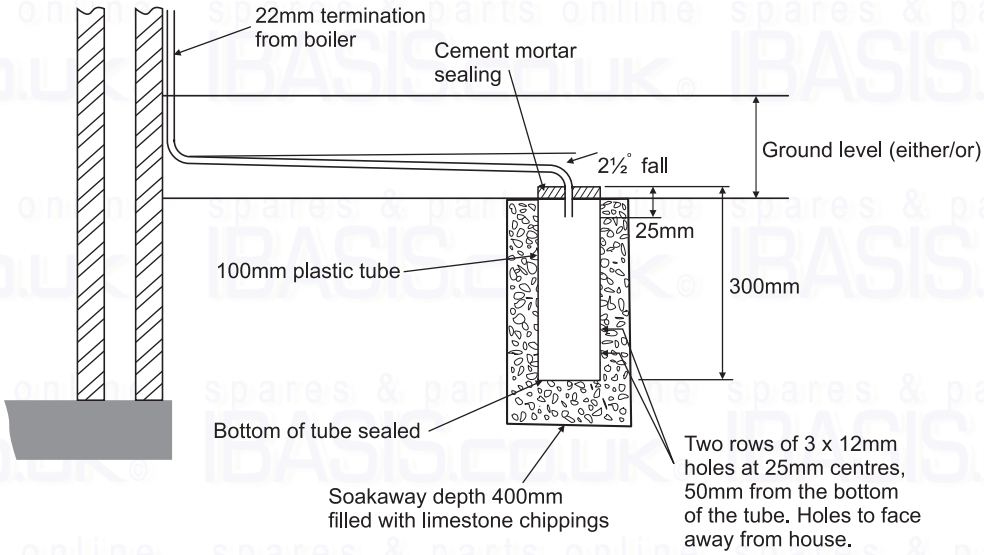

Fig. 9 - External soakaway

4 INSTALLATION

4.1 UNPACKING

1. The boxes required when the boiler is installed with a horizontal flue are as follows:-

   Box 1 Cased boiler fitted with water and gas valves, filling loop, union bends and washers
   Mounting bracket plus screws and wall plugs
   Literature pack and Wall template

   Box 2 CD Easy-Flue 500 mm or CD Easy-Flue 1000 mm. Both include 90° bend and horizontal flue terminal
   Note: NOT required for vertical flue

   Notes: a. All flues must be suitable for CD condensing boilers.
   b. CD 750 mm and 1000 mm flue extensions are available, if required.

2. Unpack boiler and remove the loose items packs and mounting bracket.

   Note: The boiler can be stood in an upright position, (to allow this, the union bends have been turned upwards so that they do not protrude beneath the bottom - check this before standing the boiler upright).

4.2 CLEARANCES REQUIRED - Fig. 10

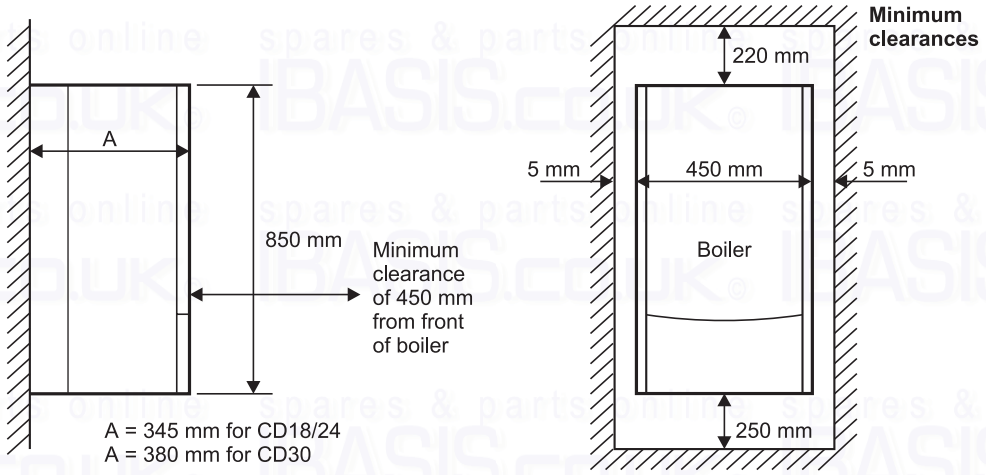

Fig. 10

4.3 PREPARE THE WALL - Figs. 11, 12

1. Decide upon the position of the boiler taking into account the clearances required for servicing and the flue terminal position.
2. Tape the template to the wall (ensure it is level and the right way up) and mark the position of the holes for the boiler mounting bracket and bottom fixings. If rear exit flue is used, mark the position of the hole for the flue.
3. **Side exit flue -** Continue the horizontal centre line of the flue across the wall to the side wall, then along the side wall 165 mm (ensure the lines are horizontal). This will give the position of the centre of the hole for the flue.
4. Cut the 110 mm diameter hole (or use a 107 mm core drill) in the wall for the flue.
   Notes: **a.** Ensure the hole is horizontal.
   b. **For internal fitting** of the flue, using the flue sealing collar supplied, cut a 130 mm dia. flue hole using a 127 mm core drill.
5. Drill the fixing holes (10 mm dia.) to accept the No.10 plugs supplied. Using the screws supplied, fit the mounting bracket.

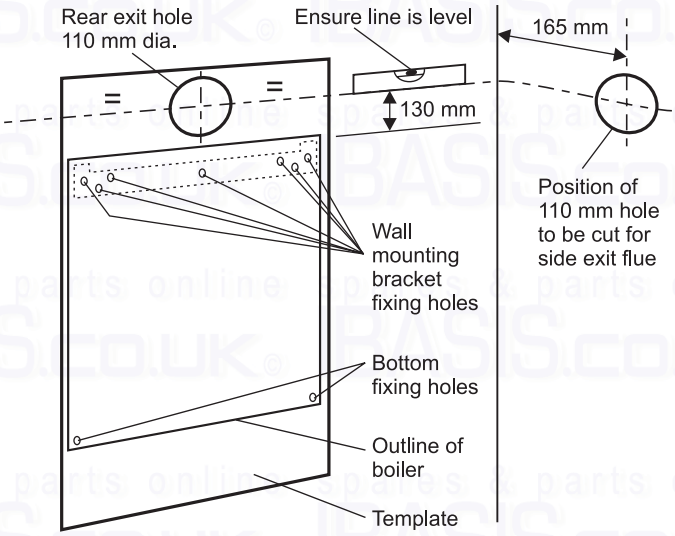

Fig. 11

6. **Top pipe connections -** Preform the pipework at the back of the boiler before hanging the boiler, see Fig. 12, and secure in the clips provided.

4.4 FIT THE BOILER - Refer to Fig. 11

1. Lift the boiler and locate it on the mounting bracket. Fit the bottom screws to secure the boiler in position.

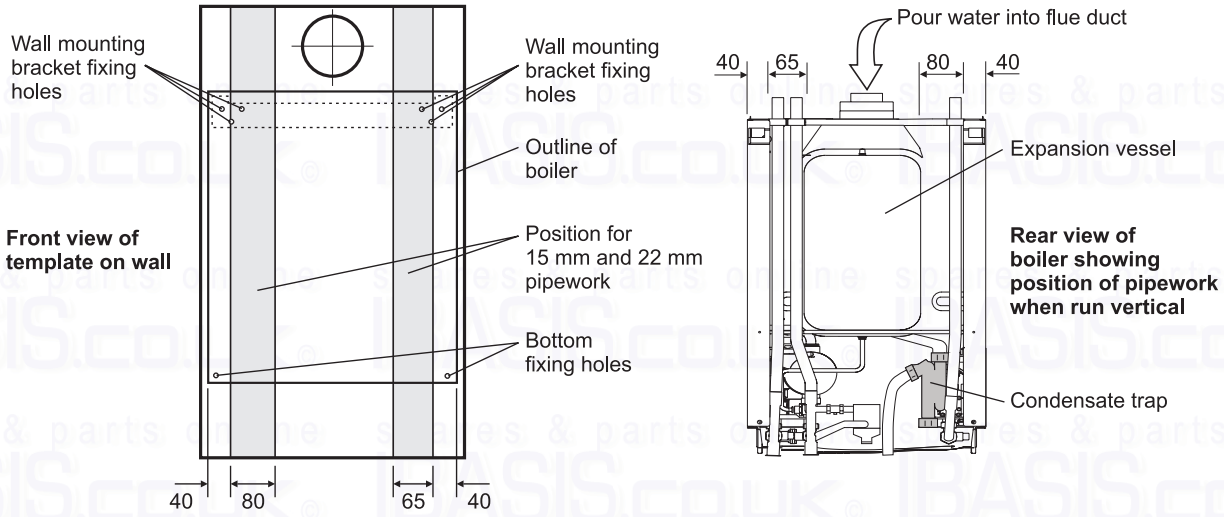

Fig. 12

4.5 CONNECT THE PIPEWORK - Fig. 13

1. Thoroughly flush out all the water pipework. Refer to Section 3.9.
2. The valves/fittings have been factory fitted, however, check that all the connections underneath the boiler have been tightened, especially the union bends.
   The heating union bends have been designed to enable the heating pipes to be routed from above and/or below using the same fitting.
   Note: When soldering to the boiler union bends, ensure the bends are not connected to the valves, otherwise the internal seals may be damaged.
3. Connect the system pipework to the boiler.
   Note: Do not forget that the pressure relief valve discharge pipe must be routed clear of the boiler to a drain in such a manner that it may be seen, but cannot cause injury to persons or property.
4. Connect the 22 mm condensate trap drain pipe to the condensate discharge pipe.
   Ensure that the condensate discharge pipe is as required in Section 3.10.
   Pour at least 0.5 litre of water into the flue duct, as shown in Fig. 12, and check the condensate discharge pipe for soundness.
5. Ensure that all the valves are closed (spindle flats at right angles to valve) and do not turn on the water or gas supplies at this stage.

A - Heating flow (22 mm)
B - Gas inlet (22 mm)
C - Heating return (22 mm)
D - Pressure relief valve (15 mm)
E - Heating drain point
F - Condensate discharge pipe
G - Cyclone drain point

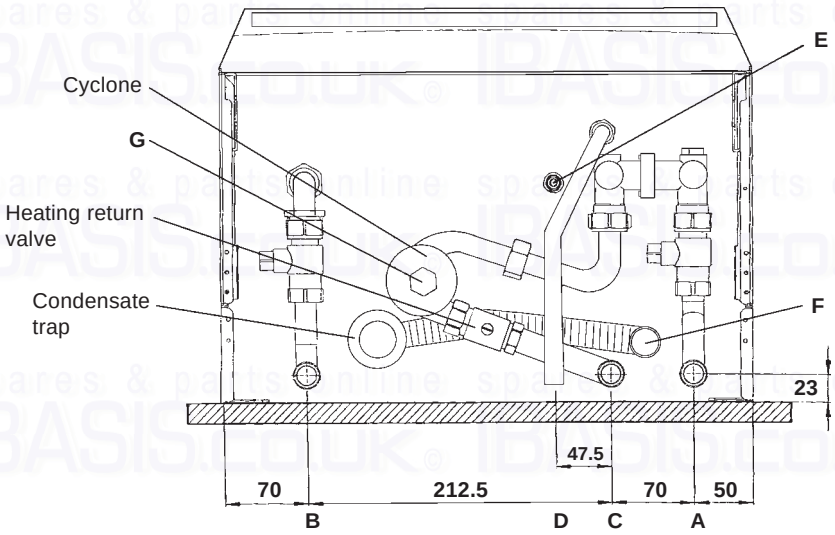

Fig. 13

4.6 FIT THE FLUE - Figs. 14, 15

The following procedure applies to fitting an Alpha CD Easy-Flue to both rear or side exit flue - horizontally only.

1. The CD Easy-Flues are suitable for use in the flue length ranges shown in the tables below.
   Note: Where the length is less than the minimum or more than the maximum, refer to Section 4.7.

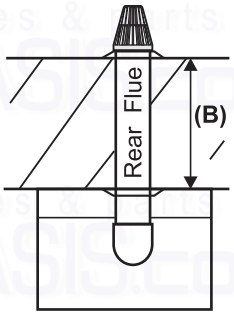

CD Easy-Flue	B (mm)	
	Max	Min
500 mm	520	280
1000 mm	915	675

Fig. 14

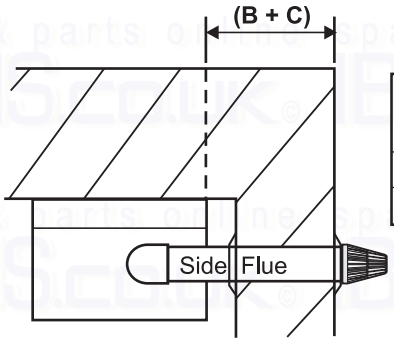

CD Easy-Flue	B + C (mm)	
	Max	Min
500 mm	460	220
1000 mm	855	615

Fig. 15

2. Determine the overall length (L) of flue required, (see Fig. 16) as follows:-

   Rear flue L = wall thickness (B) + 170 mm

   Side flue L = wall thickness (B) + distance between boiler and wall (C) + 230 mm

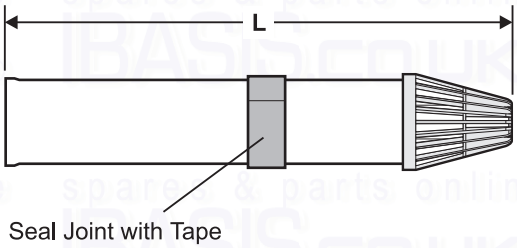

Fig. 16

3. Adjust the telescopic section of the flue to the distance 'L', ensuring that the two labels marked 'TOP' are aligned, then seal and secure the joint between the ducts with the sealing tape supplied.
4. Pass the flue assembly through the wall (from inside or outside).
   Note: Internal fitting - If there is no access to make good the outside wall, locate the flue sealing collar onto the outer duct of the flue immediately before the terminal grille onto the location provided. Push the flue assembly through the 130 mm flue hole, so that the collar completely passes through the wall. Then pull the flue assembly back into the correct position. Visually check that the collar is sealing the outside wall and that it is not restricting any of the openings of the flue terminal.

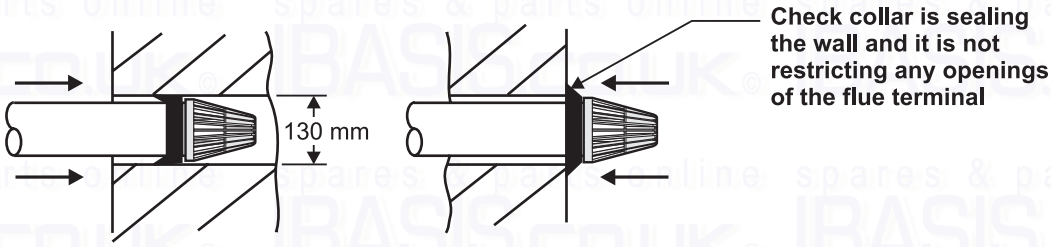

Fig. 17 - Fitting the flue from inside

5. Position the seal and clamp (two screws) supplied, over the bend. Fit the bend to the boiler and rotate to the correct position. Secure in position using the seal and clamp, ensuring the seal is located centrally over both the bend and boiler adaptor.
6. Fit the inside flue sealing collar over the Easy-Flue. Fit the outside flue sealing collar onto the flue immediately before the terminal grille onto the location provided.
7. Slide the clamp (three screws) over the outer duct and pull the flue assembly towards the bend, locating the inner duct into the seal joint on the bend. Ensure the labels marked 'TOP' are positioned at the top before securing the flue assembly to the bend with the clamp (three screws) located centrally over the joint.

   Note: Check the flue terminal protrudes 100 mm out of the wall and the inner duct of the terminal is positioned correctly (see Fig. 18).
8. Make good the inside wall by pushing the inside flue sealing collar upto the wall.

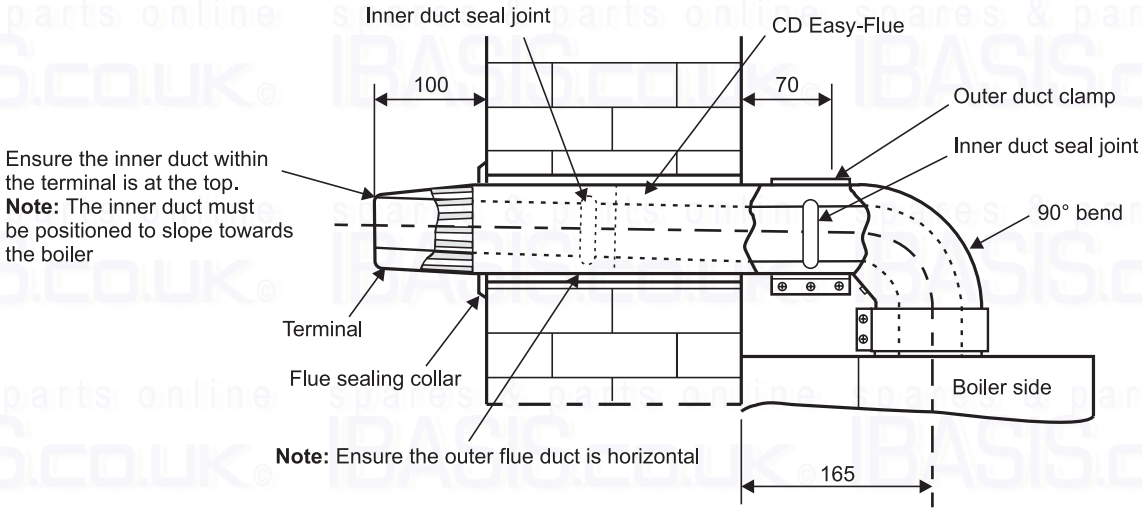

Fig. 18 - Rear flue

4.7 EXTENDING THE FLUE - Fig. 19

Note: The maximum horizontal flue assembly length must not exceed a length of 12 metres.

1. When the flue length required is more than the maximum or less than the minimum stated in Section 4.6, paragraph 1, refer to the table below.

Flue Length	Rear Flue (B)	Side Flue (B + C)	Comments
Up to maximum:-	11.83 m	11.77 m	Alpha CD 750 mm or 1000 mm flue extension (Part No. 6.2000750 or 6.2001050) is required to extend the range of telescopic flue. Refer to Section 4.7 paragraph 2 for instructions on how to extend the flue. **Note:** A 130 mm flue hole (127 mm core drill) is required in the wall.
Between:-	675 mm and 915 mm	615 mm and 855 mm	Within the standard Easy-Flue 1000 mm (Part No. 6.20001000) telescopic range.
Between:-	520 mm and 675 mm	460 mm and 615 mm	Use an Easy-Flue 1000 mm (Part No. 6.20001000) and the terminal may protrude somewhat from the outside wall.
Between:-	280 mm and 520 mm	220 mm and 460 mm	Within standard Easy-Flue 500 mm (Part No. 6.2000500) telescopic range.
Less than:-	280 mm	220 mm	Terminal may protrude somewhat from the outside wall.

2. Use the template (supplied with the boiler) to mark the required flue position and cut a 130 mm diameter hole for the flue (use a 127 mm core drill). The size of the hole provides sufficient clearance for the clamps on the flue extension to pass through the hole.
3. Determine the overall flue length as described in Section 4.6, paragraph 2 to determine the number of Alpha CD 750/1000 mm flue extensions required.
4. Assemble the flue extensions together by locating the inner duct into the seal joint and secure each extension together with the clamps supplied (three screws). Ensure that the clamps are positioned centrally over the joints.

   Note: If it is required to cut an extension, **DO NOT** cut the end of the inner duct that incorporates the seal joint. Ensure the inner duct end without the seal joint is cut so that it is 15 mm longer than the outer duct.
5. Adjust the telescopic section of the Easy-Flue to the required length and secure the Easy-Flue with the sealing tape supplied. Fit the Easy-Flue to the extensions by locating the inner duct into the seal joint and secure with the clamp (three screws), ensuring it is located centrally over the joint.
6. Mark the end of the flue assembly 'TOP' where it is connected to the boiler,so that the 'TOP' of the flue terminal is aligned with the 'TOP' at the boiler end of the flue assembly.
7. Pass the complete flue assembly through the wall.

8. Position the seal and clamp (two screws) supplied, over the bend. Fit the bend to the boiler and rotate to the correct position and secure in position using the seal and clamp, ensuring that the seal is positioned centrally over both the bend and adaptor.
9. Slide the clamp (three screws) over the outer duct and pull the flue assembly towards the bend, locating the inner duct into the seal joint on the bend.
10. Secure the flue assembly to the bend with the clamp (three screws) ensuring it is positioned centrally over the joint, ensuring the 'TOP' marked on the outer duct is positioned at the top.

    Note: Check the flue terminal protrudes 100 mm out of the wall and that the inner duct of the terminal is positioned correctly, i.e. the inner duct within the terminal is at the top. See Fig. 19.
11. Make good the outside wall by fitting a flue sealing collar onto the location provided immediately behind the flue terminal grille. Make good the inside wall as required.

    Note: If flue sealing collars are being used to make good the inside wall, then they will need to be fitted before assembling the flue.

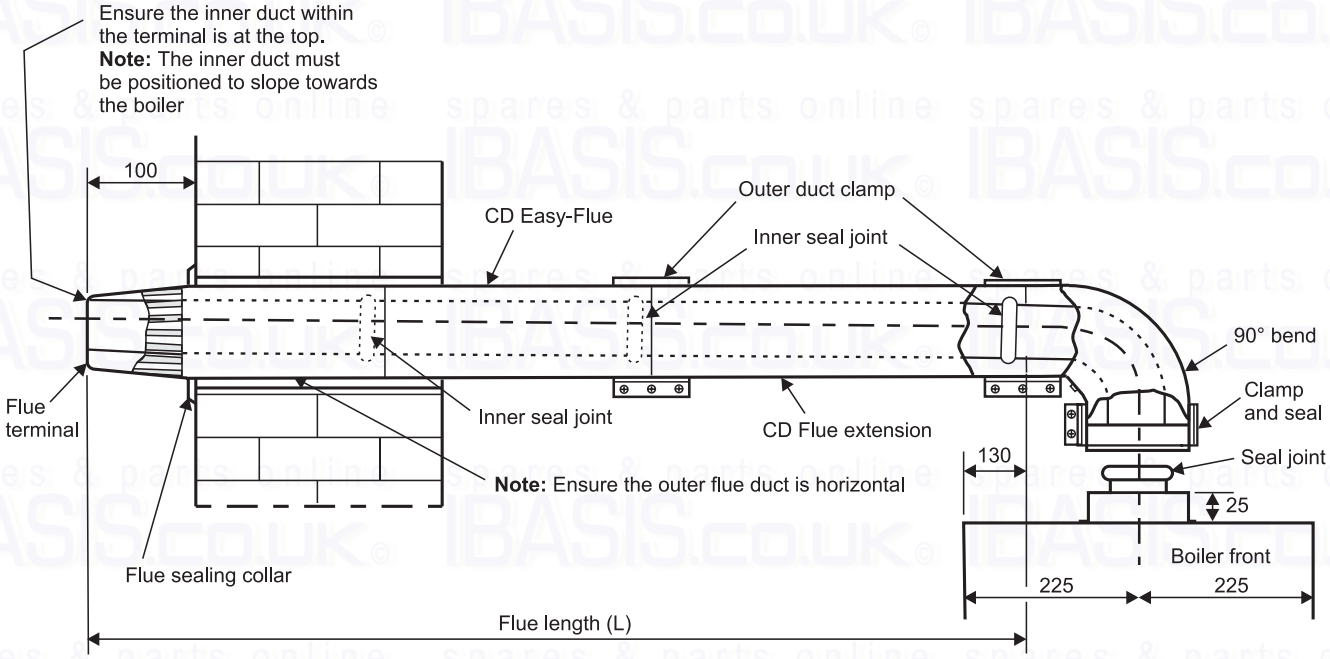

Fig. 19 - Side flue

4.8 CONNECT THE MAINS SUPPLY - Fig. 20

1. Gain access to the boiler terminal block by releasing the two fixing screws (one each side) securing the control panel and lowering the panel. Refer to Technical Data, Section 2.9 for connection details.
2. **Note:** This boiler has been fitted with a mains supply cable. However, if it is necessary to fit an alternative supply cable, ensure the cable clamp that has been fitted is removed and connect as follows:-
   Remove the two screws securing the terminal block cover from the back of the control box (see Fig. 20). Pass the mains supply cable through the cable clamp and connect as follows:-
   Brown to L, Blue to N and Green/Yellow to ⏚. Ensure correct polarity.
   Note: Ensure that the length of the earth wire is such that if the supply cable is pulled out of its clamp the live and neutral wires become taut before the earth wire.
   The main terminal block can be removed by pulling it off the pins to give easy access to the terminals.
   Do not switch on the electrical supply at this stage.

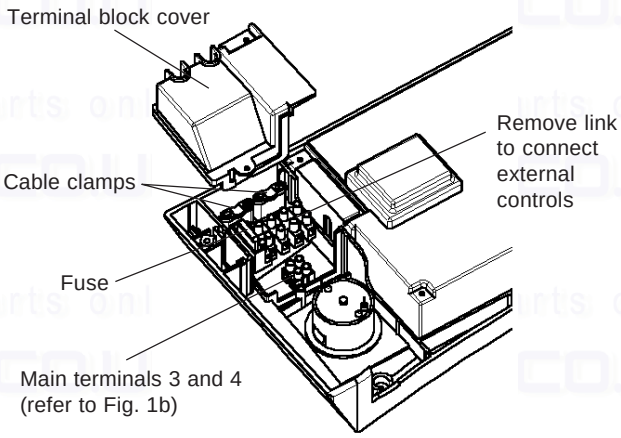

Fig. 20

3. **If an external control, i.e. room thermostat or external clock is to be fitted,** remove the terminal block cover and remove the link between terminals 1 and 2. Pass the cable through the cable clamp and connect it to terminals 1 and 2. Replace the terminal block cover. (Refer to Section 2.9).
   Note: If an internal clock is being fitted, refer to Section 2.9, Fig. 1 for connecting to terminals 3 and 4.
4. Replace the terminal block, ensuring it is located correctly on the plastic pins and replace the cover.
5. Ensure that there is sufficient free cable to allow the control panel to be raised and lowered then tighten the cable clamp screws.
6. Leave the control panel open until commissioning procedures have been completed.
7. Carry out electrical system checks - Short circuit, Polarity, Earth continuity and Resistance to earth with a suitable multimeter.

4.9 FITTING AN INTERNAL CLOCK KIT (Optional) - Fig. 21

Ensure the electrical supply to the boiler is isolated.

IMPORTANT - Only use an Alpha two channel clock. Do not fit a single channel clock.

1. Remove the two screws securing the clock cover at the rear of the control panel.
2. Remove and discard the clock blanking panel.
3. Insert the clock into the opening and secure in place with the screws supplied - do not overtighten the screws.
4. i). Disconnect the clock wiring from the in-line connector and connect the wires to the clock as follows:-
   Brown wire to terminal 1, Blue wire to terminal 2, Black wire to terminal 3, Grey wire to terminal 4 and White wire to terminal 5, (or, as per the instructions supplied with the clock). Ensure wiring is correct.
   ii). Replace the clock cover. Do not overtighten the fixing screws.
   iii). Leave the control panel open until commissioning procedures have been completed.

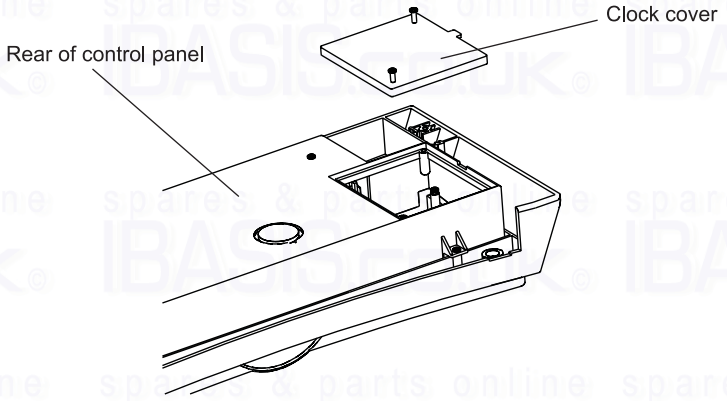

Fig. 21

5 COMMISSIONING

When commissioning the boiler, ensure the Benchmark Checklist is completed.

5.1 FILL THE SYSTEM

1. The boiler is fitted with an automatic air vent positioned on the pump (see Fig. 2). The vent is always open and has no sealing cap.
2. Open the central heating flow and return valves (slot in-line with valve) (see Fig. 13).
3. Open the fill point valve on the filling loop until water is heard to flow. To aid venting, the boiler drain point (see Fig. 2) may be opened until water flows out. Close the drain point as soon as water appears.
4. To remove the air - Vent each radiator in turn, starting with the lowest in the system.
5. It is important that the pump is properly vented to avoid it running dry and damaging its bearings. Unscrew and remove the cap from the centre of the pump. Using a suitable screwdriver rotate the exposed spindle about half a turn, then replace the cap.
6. Check the operation of the pressure relief valve (see Fig. 2) by turning the head anti-clockwise until it clicks. The click is the valve lifting off its seat allowing water to escape from the system - check that this is actually happening.
7. Continue to fill the system until the pressure gauge indicates 1.0 bar. Close the fill point valve and check the system for water soundness, rectifying where necessary. Disconnect the filling loop from the mains supply.
   Water may be released from the system by manually operating the drain point (see Fig. 2) until the system design pressure is obtained. The system design pressure (cold) should be between 0.75 and 1.25 bar.
   Refer to Sections 3.7 and 3.8. System volume, Flushing and Filling the system.
8. Open the mains water inlet valve (see Fig. 13). Turn on all hot water taps and allow water to flow until no air is present. Turn off taps.
9. Ensure that the condensate trap has been filled with water. Refer to Section 4.5, paragraph 4.

5.2 BOILER CONTROLS - Fig. 22

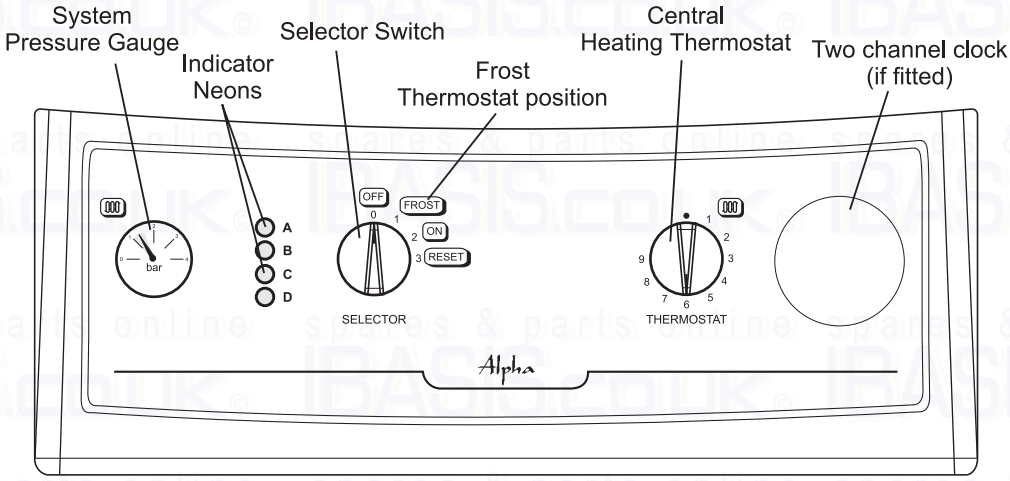

Fig. 22

5.3 TEST FOR GAS SOUNDNESS AND PURGE THE SUPPLY

1. With the boiler gas service cock closed (slot at right angles to valve). Pressure test the gas supply and inlet pipework connection to the boiler gas service cock for soundness in accordance with BS 6891.
2. Loosen the gas inlet pressure test point screw on the gas valve (see Fig. 24). Ensure the gas supply is on and open the boiler service cock to purge in accordance with BS 6891.
3. Retighten the test point screw and test for gas soundness. Close the boiler gas service cock.

5.4 INITIAL LIGHTING - Refer to Fig. 22

1. Ensure that the gas and electrical supplies to the boiler are off and that the mains water inlet valve and the central heating flow and return valves are open.
2. Turn on the gas and electrical supplies to the boiler.
3. Ensure all external controls are calling for heat.
   If the optional clock is fitted, refer to the clock's User instructions, set the time and ensure the clock is in an 'on' mode.
4. Set the central heating thermostat to maximum.
5. Set the boiler selector switch to 'ON'. The boiler will now run in the central heating mode. The pump will start, the fan will start and the main gas valve solenoid will open allowing the main burner to light.

5.5 CHECK THE BURNER PRESSURES - Figs. 23, 24

Turn the boiler off. Remove the two pressure test point screws at the top of the boiler and connect a differential pressure gauge to P1 and P2 as shown in Fig 24. Allow the boiler to run for 10 minutes and check the differential burner pressures.

1. Set the boiler selector switch to 'ON'.
2. The burner will light at the ignition rate and will increase to the factory pre-set maximum output after 1 minute.
   Note: The burner pressure settings have been factory set and do not require adjusting. If incorrect, check that the inlet gas pressure is 20 mbar.
   If the inlet gas pressure is not 20 mbar, either the pipework is too small or the gas supply to the house is insufficient, in which case contact your gas supplier.
3. Turn off the boiler. Disconnect the pressure gauge and tighten the test point screws.

Test for gas soundness using suitable leak detection fluid.

Note: Refer to Technical Data, Section 2.1 for the required differential burner pressures.

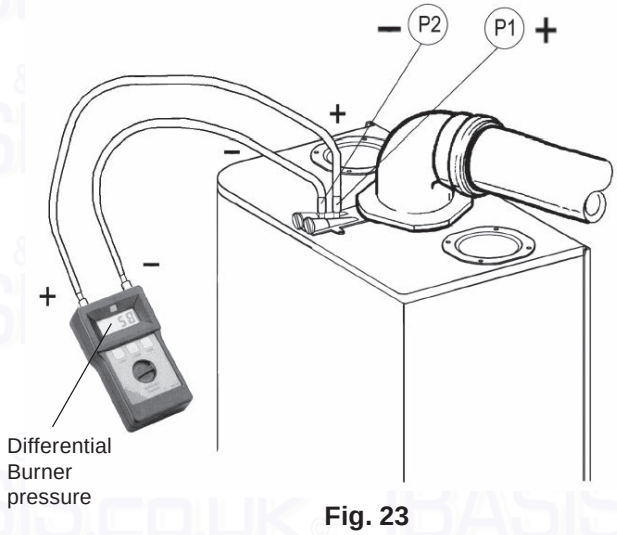

Fig. 23

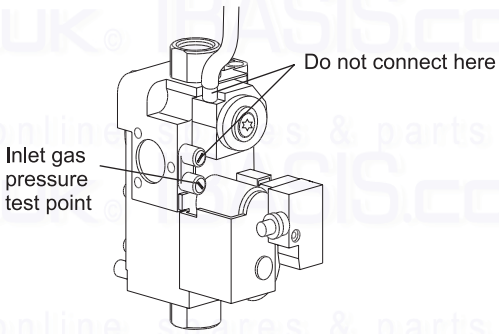

Fig. 24

5.6 FINAL COMMISSIONING

1. Allow the heating system to heat up, then balance the system to achieve the necessary temperature difference across the heating flow and return pipes at the boiler and check the system volume and pressure. (Refer to Technical Data, Sections 2.2 and 2.8).
2. Turn off the boiler.
3. Thoroughly flush out the water pipework (refer to Section 3.9) and with no pressure in the boiler heating circuit, empty the cyclone at it's drain point (see Fig. 13) of any debris.
4. Re-pressurise the system as described in Section 5.1.

5.7 FINAL ASSEMBLY

1. Raise the control panel and secure in position with the screws provided.
2. If the boiler is to be left in service with the User, set the controls, clock (if fitted, see User's Operating manual) and room thermostat (if fitted) to the User's requirements.
3. If the boiler is not to be handed over immediately, close the boiler gas service cock and switch off the electrical supply.
4. If there is any possibility of the boiler being left during frost conditions, then the boiler and system should be drained (refer to Section 8.2). It is recommended that a label is attached to the boiler drawing attention to the fact that the system has been drained.
5. Complete the details of the installation in the Benchmark Checklist on page 35.

5.8 USER INFORMATION

The User must be advised (and demonstrated if necessary) of the following important points:-

1. How to light and turn off the boiler and how to operate the system controls.
2. The importance of annual servicing of the boiler to ensure safe and efficient operation.
3. That any servicing or replacement of parts must only be carried out by CORGI registered personnel.
4. Ensure that the boiler controls and room thermostat (if fitted) are set to the User's requirements.
5. Tell the User about the sealed system pressure.
6. Tell the User that if the electrical supply is on and the boiler has not operated for 24 hours for heating or hot water, the pump will automatically operate for 5 minutes.
7. Explain to the User that an internal frost thermostat is fitted in the boiler, and that the electrical supply to the boiler must be left on for the thermostat to operate.
8. Explain to the User that in certain weather conditions the terminal will emit a plume of steam, i.e. water vapour. This is safe and quite normal.
9. Show the User the position of the pressure relief valve and condensate discharge pipes.
10. Hand the User's instructions to the User.
11. Ensure the Benchmark Checklist in Section 12 on page 35 has been completed after the boiler has been installed and commissioned.
12. Leave these Installation and Servicing instructions with the User for use on future calls.

6 BOILER OPERATION

The boiler operating mode is controlled by the selector switch on the facia panel.
When the selector switch is set to 'ON' the boiler will provide central heating.

6.1 CENTRAL HEATING MODE

If there is a call for heat, the pump will start to circulate the central heating water. The fan will run and the pre-mix burner will light. The burner output then automatically adjusts to suit the system demand; as the temperature of the water in the boiler approaches that set by the adjustable temperature thermostat, the burner output is reduced. When the set temperature is reached, the burner is turned off. The fan continues to run for 50 seconds and the pump continues to run until the temperature within the boiler reduces to the set temperature before allowing the burner to relight. If the primary sensor has not registered the pre-set temperature but the room thermostat is satisfied the burner is turned off. The fan continues to run for 50 seconds and the pump continues to run for 60 seconds. In this instance there is no delay before the burner will relight.

Note: If the system pressure is very low, the primary pressure switch will prevent the boiler from operating.

6.2 FROST THERMOSTAT

The boiler incorporates a built in frost thermostat which automatically turns on the boiler and pump if the water in the boiler falls below 8°C, providing the electrical supply is on and the selector switch is set to position (1) or position (2). The boiler will operate until the water temperature in the system reaches approximately 40°C.

6.3 PUMP

If the electrical supply is on and the boiler has not operated for 24 hours for heating or hot water, the pump will operate automatically for five minutes every 24 hours.

6.4 INDICATOR NEONS

When neons A (red), B (red), C (yellow), D (green) are illuminated, the following conditions apply:-

Neon

- **D** Illuminated continuously - Electricity supply to the boiler is on.
- **C** Illuminated continuously - Burner is alight.
- **A** Flashing on and off - Temperature sensor fault.
- **B** Flashing on and off - Overheat thermostat has operated. Rotate selector switch to the reset position (3) to reset.
- **B** Illuminated continuously - Burner has failed to light. Rotate selector switch to the reset position (3) and the ignition sequence will restart after a delay of about 30 seconds.

A and **B** Flashing on and off at the same time - Blocked flue or fan fault.

A and **B** Flashing on and off alternately - System pressure is very low and re-pressurisation is required.

A Flashing and **B** Illuminated continuously - Pump fault or restricted flow.

Note: Do not hold the selector switch in the reset position (3) for more than 2 to 3 seconds.

7 ROUTINE SERVICING

To ensure efficient operation of the boiler it is recommended that it is checked and serviced as necessary at regular intervals. The frequency of servicing will depend upon the particular installation conditions and usage, but in general once per year should be adequate.

It is the law that any service work must be carried out by a competent person, i.e. CORGI registered personnel.

Warning: Before servicing the boiler, isolate the electrical supply and close the boiler gas service cock. Allow the boiler to cool.

The data label is positioned on the inside of the left hand side panel.

Always test for gas soundness after servicing any gas carrying components.

Always carry out electrical system checks i.e. Eart Continuity, Resistance to Earth, Short Circuit and Polarity with a suitable meter after servicing.

7.1 IMPORTANT NOTES PRIOR TO SERVICING

1. Check the flue terminal outside and ensure it is not blocked.
2. Run the boiler and check the operation of its controls.
3. Refer to Fig. 2 for location of flue sampling point.
4. Ensure that all system connections and fittings are sound. Remake any joints and check the tightness of any fittings that may be leaking.
5. It is recommended that the operation of the safety valve is checked by turning the head anti-clockwise until it clicks. The click is the safety valve lifting off its seat allowing water to escape from the system - check that this is actually happening.
6. Refill, vent and re-pressurise the system as necessary. (Refer to Commissioning, Section 5.1).
   If the system pressure exceeds 2.5 bar when operating at maximum temperature, the heating expansion vessel should be checked and re-pressurised, if necessary.
   Note: 1. Check the expansion vessel charge only when the system pressure is zero.
   2. The expansion vessel pressure test point is accessible from the top and rear of the boiler.
7. Check that the condensate trap drain pipe is connected and all joints are sound.
8. Record details of the service in the Service History Section on back page of this manual.

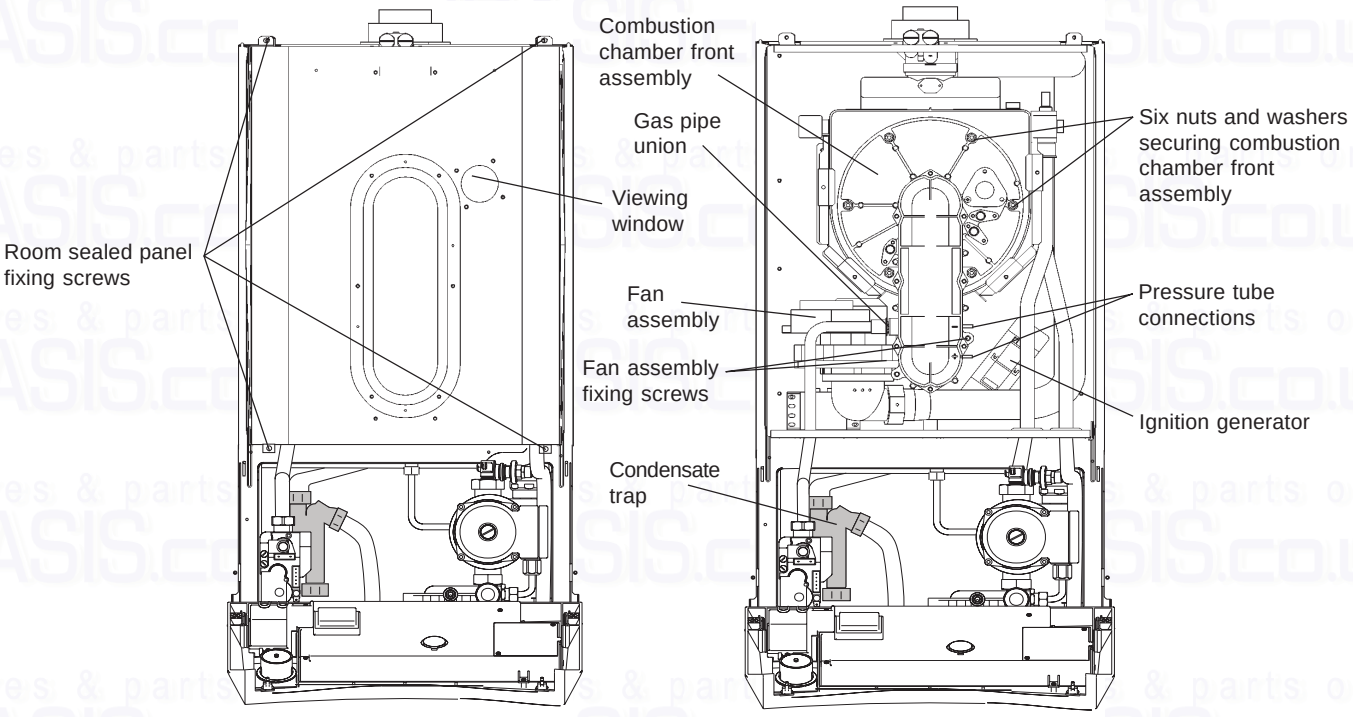

Fig. 25

7.2 PREPARE FOR SERVICING - Fig. 25

1. Ensure the electrical supply is isolated and the gas supply is off.
2. Unscrew the two screws securing the control panel and lower the panel.
3. Lift the case front panel upwards slightly and pull it forwards to remove it from the boiler.
4. Remove the four screws securing the room sealed chamber panel and remove the panel, taking care not to damage the seal.
5. Disconnect the gas supply pipe union.
6. Remove the two screws securing the fan assembly to the combustion chamber front.
7. Remove the two pressure tubes, noting their positions.
8. Disconnect the electrode lead from the ignition generator and the in-line connector to the flame sensing electrode.
9. Remove the six nuts and washers securing the combustion chamber front assembly and remove the assembly.

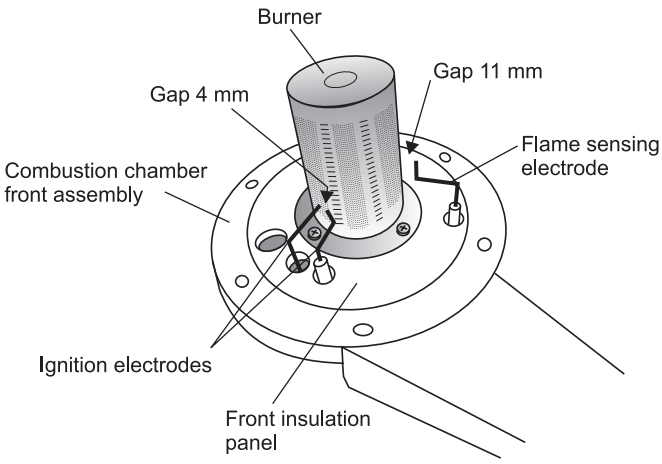

Fig. 26

7.3 CLEANING THE BOILER

1. Remove any deposits from heat exchanger using a suitable soft brush. Do not use a brush with metallic bristles.
2. Check the condition of the combustion chamber insulation panels. Any damaged panels must be replaced. (Refer to Component Replacement, Section 8.18).
3. Check the condition of the burner injector on the combustion chamber front assembly, carefully clean them with a soft brush if necessary.
   Do not use a brush with metallic bristles as this might damage the injectors.
4. Remove any deposits from the heat exchanger coils. This can be done by suction or water sprayed onto the coils. Ensure all electrical components are protected from water. Any water used to clean the heat exchanger will drain to the condensate trap.
5. Unscrew and replace any injector that appears damaged.
6. Remove the four screws securing the burner (see Fig. 26) and remove the burner. Clean the burner with a soft brush and check that the flame ports are clear. Blockages may be removed with a stiffer brush. Tap the burner, open end down, to remove any deposits from inside.
7. Check the condition of the electrodes.
9. Check the spark gap, positioning and height of the electrodes. See Fig. 26.
10. Unscrew the condensate trap drain cap. Clean and remove any deposits from the trap.
    Note: Before removing the cap, ensure that the water released from the trap can be contained to avoid spillage.
    The trap will contain no more than 200 cc of condensate water. Replace the drain cap.

7.4 RE-ASSEMBLE THE BOILER

1. Replace the burner, ensuring it is located correctly and secure it in position using the four screws previously removed.
   Important: Before replacing the combustion chamber front assembly, pour at least 200 cc of water into the coils of the heat exchanger. This is to ensure the condensate trap is full of water before operating the boiler.
2. Replace the combustion chamber front assembly, ensuring it is correctly located.
3. Ensure the electrode lead is connected and the seal is in position in the bottom of the room sealed chamber.
4. Test the connections for gas soundness and re-commission, Sections 5.4 and 5.5.
5. Ensure that the room sealed chamber panel seal is intact and in position, replace the panel ensuring it has been located correctly (especially on the sides) and secure it in position with the screws previously removed.
6. Place the front case panel in position as shown in Fig. 25 and secure in position.
7. Raise the control panel and secure in position with the two screws provided.
8. Check the operation of the boiler. (Refer to Boiler Operation, Section 6).
9. Return all controls to their original settings.

8 COMPONENT REPLACEMENT

It is the law that any service work must be carried out by a competent person, i.e. CORGI registered personnel.

Warning: Before replacing any boiler components, isolate the electrical supply and close the boiler gas service cock. Allow the boiler to cool.

Always test for gas soundness after replacing any gas carrying components or disturbing any gas connections.

Always carry out electrical system checks i.e. Eart Continuity, Resistance to Earth, Short Circuit and Polarity with a suitable meter after servicing.

Check the operation of the boiler. (Refer to Boiler Operation, Section 6).

Ensure that all the controls are returned to their original settings.

The replacement of components in Sections 8.3 to 8.15 does not require draining of the boiler.

8.1 GENERAL ACCESS - Fig. 25

Ensure the electrical supply is isolated and the gas supply is off.

1. **If access is required behind the control panel -** Release the two fixing screws (one each side) securing the control panel and lower the panel.
2. **To gain access behind the casing -** Lift the case front panel upwards slightly and pull it forwards to remove it from the boiler (see Fig. 26). If required, remove the side panels by removing the bottom fixing screw and lifting forwards and upwards.
3. **To gain access behind the room sealed chamber panel -** Remove the four screws securing the room sealed chamber panel and remove the panel, taking care not to damage the seal.
   Note: When replacing the panel, ensure the seal is intact and that the panel has been located correctly, especially on the sides.
4. **To gain access to the control panel components -** Remove the five screws securing the rear cover and carefully raise the cover from the front. When replacing the cover, ensure no wires are trapped and all wiring is secured. Secure with five screws - do not overtighten.

8.2 DRAINING THE BOILER - Refer to Figs. 2 or 13

Isolate the electricity supply and close the boiler gas service cock (see Fig. 13). Allow the boiler to cool.

1. **Heating circuit**
   Close the central heating flow and return valves (see Fig. 13).
   Connect a suitable pipe to the drain point (see Fig.2) and route it to a suitable container. Open the drain point.

Note: Some water will remain in the components and care must be taken when removing them.

8.3 ELECTRODES - See Fig. 26

Gain access behind the room sealed chamber panel as in Section 8.1.

1. **Ignition electrode and lead**
   Disconnect the lead from the ignition generator, noting its position.
   Remove the two screws securing the electrode to the front of the combustion chamber and carefully withdraw the electrode.
2. **Flame sensing electrode and lead**
   Remove the grommet in the bottom of the chamber, disconnect the flame sensing electrode in-line connector and withdraw the lead.
   Remove the two screws securing the electrode to the front of the combustion chamber and carefully withdraw the electrode.
3. **Ignition electrode**
   Remove the two screws securing the electrode to the front of the combustion chamber and carefully withdraw the electrode.

Re-assemble in reverse order

8.4 MAIN BURNER - Fig. 26

1. Remove the burner assembly as described in Routine Servicing, Section 7.2.
2. Remove the four screws securing the burner to the combustion chamber front assembly.
3. Re-assemble with a new burner as described in Routine Servicing, Section 7.4.

8.5 BURNER INJECTORS - Fig. 25

1. Gain access behind the room sealed chamber panel as described in Section 8.1.
2. Undo the gas inlet union to the combustion chamber front to gain access.
3. Unscrew the damaged injector and screw in a replacement.
4. Re-assemble in reverse order.

8.6 FAN - Fig. 27

1. Gain access behind the room sealed chamber panel as described in Section 8.1.
2. Disconnect the fan wiring.
3. Remove the inlet and outlet flanges from the fan. Fit the new fan and re-assemble in reverse order. Ensure that the pressure tubes are connected correctly.
4. Re-assemble and test the boiler as described in Routine Servicing, Section 7.4 paragraphs 5 to 9.

8.7 IGNITION GENERATOR - Fig. 27

1. Gain access behind the room sealed chamber panel as described in Section 8.1.
2. Disconnect all the wiring from the ignition generator.
3. Remove the two screws securing the generator and remove.
4. Secure the new generator in position and re-connect the wiring.
5. Re-assemble in reverse order.

8.8 TRANSFORMER - Fig. 27

1. Gain access behind the room sealed chamber panel as described in Section 8.1.
2. Remove the two screws securing the transformer and remove the transformer.
3. Disconnect all of the wiring noting their position.
4. Fit the new transformer and re-assemble in reverse order.

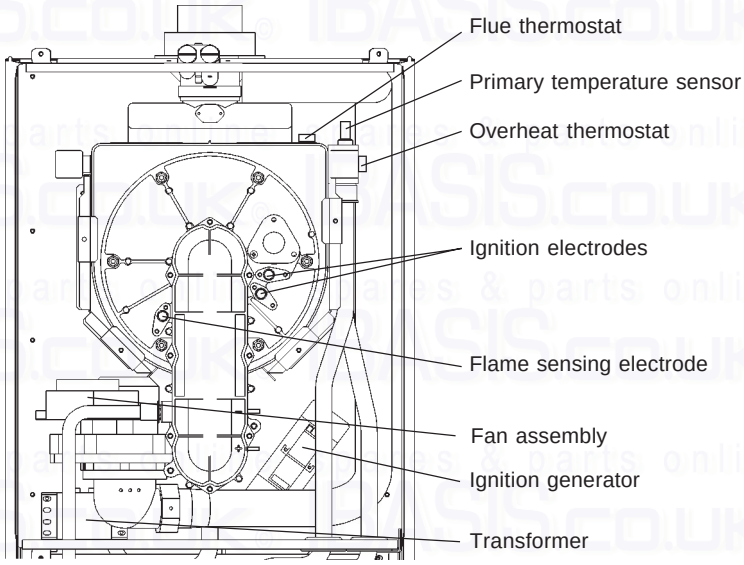

Fig. 27

8.9 OVERHEAT THERMOSTAT - Fig. 27

1. Gain access behind the room sealed chamber panel as described in Section 8.1.
2. Disconnect the wiring from the overheat thermostat.
3. Unscrew and remove the overheat thermostat from the heat exchanger.
4. Fit the new overheat thermostat taking care not to cross thread it and re-assemble in reverse order.

8.10 FLUE THERMOSTAT - Fig. 27

1. Gain access behind the room sealed chamber panel as described in Section 8.1.
2. Remove the thermostat from the spring clip at the top rear of the heat exchanger.
3. Disconnect the wiring.
4. Fit the new thermostat and re-assemble in reverse order.

8.11 GAS VALVE - Fig. 28

1. Gain access behind the casing as in Section 8.1.
2. Disconnect the positive pressure tube from the gas valve.
3. Loosen the one screw (see Fig. 28) securing the electrical plug and disconnect the plug.
4. Disconnect the burner manifold union and the gas inlet pipe union.
5. Remove the two manifold screws from beneath the boiler.
6. Push the valve towards the rear of the boiler and lift out the valve assembly.
7. Remove the inlet and outlet flanges and fit them to the new valve.
8. Fit the new assembly and re-assemble in reverse order.
9. Light the boiler and test for gas soundness. (Refer to Commissioning, Section 5.4) and the instructions supplied with the replacement valve for adjustment of the valve.
10. Complete re-assembly as described in Routine Servicing, Section 7.4 paragraphs 5 to 9.

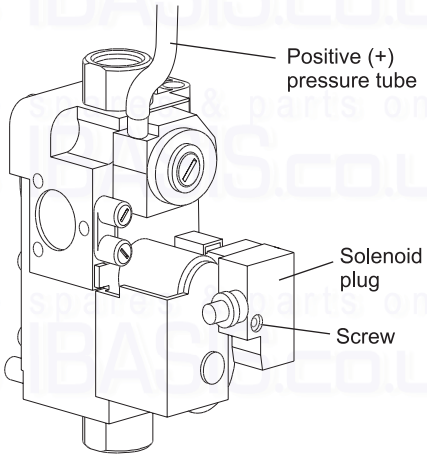

Fig. 28

8.12 VIEWING WINDOW - Fig. 25

1. Gain access behind the casing as in Section 8.1.
2. Remove the rubber window frame and remove the damaged glass.
3. Re-assemble in reverse order with a new glass. Ensure the rubber frame is located correctly in the front panel.

8.13 TERMINAL BLOCK FUSE - Refer to Fig. 20

The fuse is located in the boiler terminal block.

1. Gain access as described in Installation, Section 4.8.
2. Lift out the fuse holder and remove the fuse. Fit a fast blow 2 A fuse as a replacement, ensuring that the holder snaps into position.
3. Re-assemble in reverse order, ensuring the terminal block is located correctly on the plastic pins.

8.14 PCB - Fig. 29

1. Gain access behind the control panel as described in Section 8.1.
2. Disconnect all the wiring connectors from the PCB.
3. Remove the five fixing screws and carefully withdraw the board from the switch spindles.
4. Re-assemble in reverse order. Refer to the wiring diagram in Section 9.1 for connections.
5. Light the boiler and adjust the PCB as described in the instructions supplied with the replacement PCB.

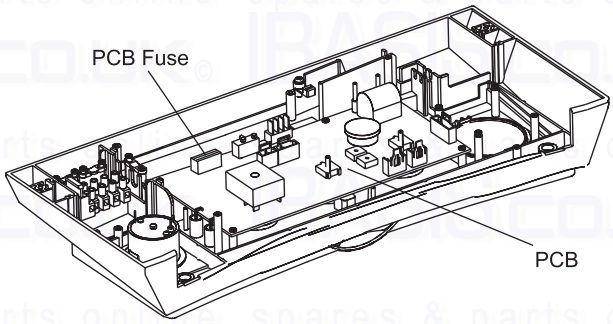

Fig. 29

8.15 CLOCK (if fitted) - Refer to Fig. 21

Note: For replacement only use an Alpha two channel clock. **Do not fit a single channel clock.**

1. Gain access behind the control panel as described in Section 8.1.
2. Remove the two screws securing the clock cover at the rear of the control panel.
3. Disconnect the wiring from the clock.
4. Remove the clock retaining screws and withdraw the clock from the control panel.
5. Fit the new two channel clock, and connect the wires as follows:-
   Brown wire to terminal 1, Blue wire to terminal 2, Black wire to terminal 3, Grey wire to terminal 4 and White wire to terminal 5, (or as per the instructions supplied with the clock).
6. Re-assemble in reverse order. Refer to the instructions supplied with the clock and set the clock to the correct time. Leave the instructions with the User.

8.16 PRIMARY HEAT EXCHANGER - See Fig. 30

1. Gain access behind the room sealed chamber panel as described in Section 8.1 and drain the boiler heating circuit as described in Sections 8.1 and 8.2.
2. Disconnect the gas inlet union from the combustion chamber front.
3. Remove the two screws and six nuts and washers securing the combustion chamber front burner assembly and remove.
4. Remove the overheat thermostat (Section 8.9), flue thermostat (Section 8.10) and the primary temperature sensor (Section 8.19).
5. Disconnect the condensate drain union.
6. Remove the two clips from the heat exchanger flow and return pipes and disconnect the unions at the pump and diverter valve (if applicable).
7. Remove the four screws securing the heat exchanger retaining brackets.
8. Lift up the heat exchanger off the pipes and remove it by carefully withdrawing it out of the boiler.
9. Re-assemble in reverse order, ensuring that new seals are used. Lubricating the seals with the grease supplied will aid assembly.
10. Refill and pressurise the system. (Refer to Commissioning, Section 5.1).

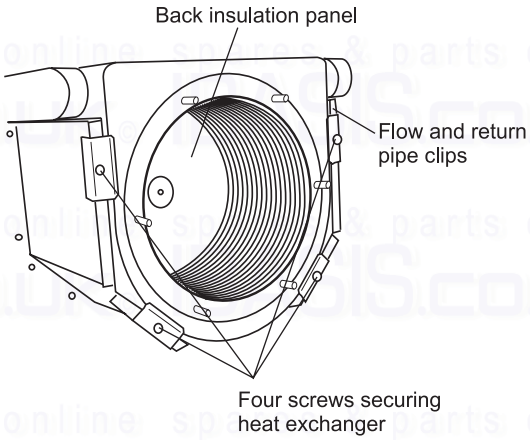

Fig. 30

8.17 COMBUSTION CHAMBER INSULATION

Gain access to the combustion chamber as described in Section 8.1.

Front insulation - see Fig. 26

1. Remove the electrodes from the combustion chamber front as described in Section 8.3.
2. Remove the four screws securing the burner.
3. Carefully remove the insulation.

Back insulation - see Fig. 30

1. Remove the combustion chamber front/burner assembly.
2. Remove the centre screw retaining the insulation.
3. Carefully remove the insulation, suction applied to the centre of the insulation will aid this.

Fit a new panel and re-assemble in reverse order.

Refill and pressurise the system. (Refer to Commissioning, Section 5.1).

8.18 PRESSURE GAUGE - Fig. 31

1. Gain access behind the casing and drain the boiler heating circuit as described in Sections 8.1 and 8.2.
2. Remove the nut securing the pressure gauge sensor and withdraw the sensor.
3. Depress the two lugs on the pressure gauge and push it out of the control panel.
4. Fit the new gauge using a new washer on the manifold connection if necessary.
5. Refill and pressurise the system. (Refer to Commissioning, Section 5.1).

8.19 PRIMARY TEMPERATURE SENSOR - Refer to Fig. 27

1. Gain access as described in Section 8.1 behind the room sealed chamber panel and drain the heating circuit as described in Section 8.2.
2. The primary sensor is positioned on the right hand side of the heat exchanger, see Fig. 27. Disconnect the wiring and unscrew the sensor. Re-assemble in reverse order with a new sensor and sealing washer.

8.20 AUTOMATIC AIR VENT - Fig. 31

1. Gain access behind the casing and drain the boiler heating circuit as described in Sections 8.1 and 8.2.
2. Unscrew the automatic air vent from the pump outlet. Fit a new one using a new 'O' ring.
3. Refill and pressurise the system. (Refer to Commissioning, Section 5.1).

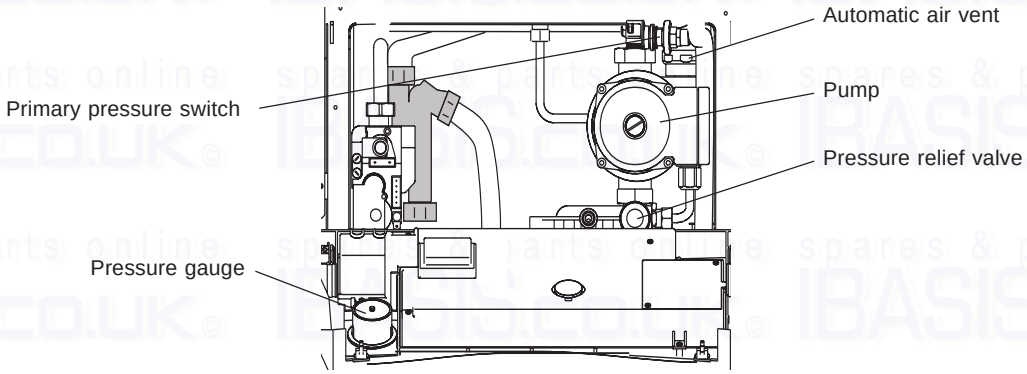

Fig. 31

8.21 PUMP - Refer to Fig. 31

Gain access behind the casing and drain the boiler heating circuit as described in Sections 8.1 and 8.2.

Pump head

1. Remove the four socket head screws securing the pump head to the body. Withdraw the head, remove the wiring cover and disconnect the wiring.
2. Connect the wiring to the new head as follows:-
   Brown to L, Blue to N, Green/yellow to ⏚.
   Ensure the pump is set to maximum (3) and re-assemble in reverse order.
3. Refill and pressurise the system. (Refer to Commissioning, Section 5.1).

Complete pump

1. Remove the pump head as described above.
2. Unscrew the automatic air vent from the pump outlet.
3. Disconnect the pump unions and withdraw the pump body.
4. Connect the wiring as described above, ensure that pump is set to maximum and re-assemble using new sealing washers.
5. Refill and pressurise the system. (Refer to Commissioning, Section 5.1).

8.22 PRIMARY PRESSURE SWITCH - Fig. 31

1. Gain access behind the casing and drain the boiler heating circuit as described in Sections 8.1 and 8.2.
2. Disconnect the wiring from the pressure switch.
3. Unscrew the switch from the primary flow pipe.
4. Using the new washer supplied, re-assemble in reverse order.
   When connecting the wiring to the new switch the polarity of the wires is not important.

8.23 PRESSURE RELIEF VALVE - Fig. 31

1. Gain access behind the casing and drain the boiler heating circuit as described in Sections 8.1 and 8.2.
2. Remove the four screws securing the bottom tray and remove the tray. Disconnect the pressure relief valve outlet fitting.
3. Release the screw retaining the pressure relief valve and pull out the valve.
4. Re-assemble in reverse order.
5. Refill and pressurise the system. (Refer to Commissioning, Section 5.1).

8.24 EXPANSION VESSEL - Fig. 12

Note: If there is less than 450 mm clearance above the boiler or a rear exit flue is used, it is not possible to replace the vessel, in which case an additional vessel should be fitted external to the boiler in the central heating return pipe, as close to the boiler as possible (see Fig. 5).

1. Gain access behind the casing and drain the boiler heating circuit as described in Sections 8.1 and 8.2.
2. Disconnect the pipe from the pump inlet manifold and expansion vessel.
3. Remove the four screws securing the top support plate.
4. Lift the expansion vessel out of the boiler.
5. When replacing the vessel, ensure that the connection is towards the front of the boiler and re-assemble in reverse order using new seals as necessary.
6. Refill and pressurise the system. (Refer to Commissioning, Section 5.1).

8.25 CYCLONE - Fig. 13

1. Gain access behind the casing and drain the boiler heating circuit as described in Sections 8.1 and 8.2.
2. Disconnect the unions from the cyclone and re-assemble with a new cyclone.
3. Pressurise the system. (Refer to Commissioning, Section 5.1).

8.26 CONDENSATE TRAP - Fig. 12

1. Gain access behind the casing and drain the trap as described in Sections 8.1 and 7.3, paragraph 10.
2. Disconnect the top and drain connection of the condensate trap.
3. Lift the trap out and re-assemble with a new condensate trap.
   Note: Before fitting the new trap, pour 100 cc of water into the trap.

9 WIRING DIAGRAMS

9.1 ILLUSTRATED WIRING DIAGRAM

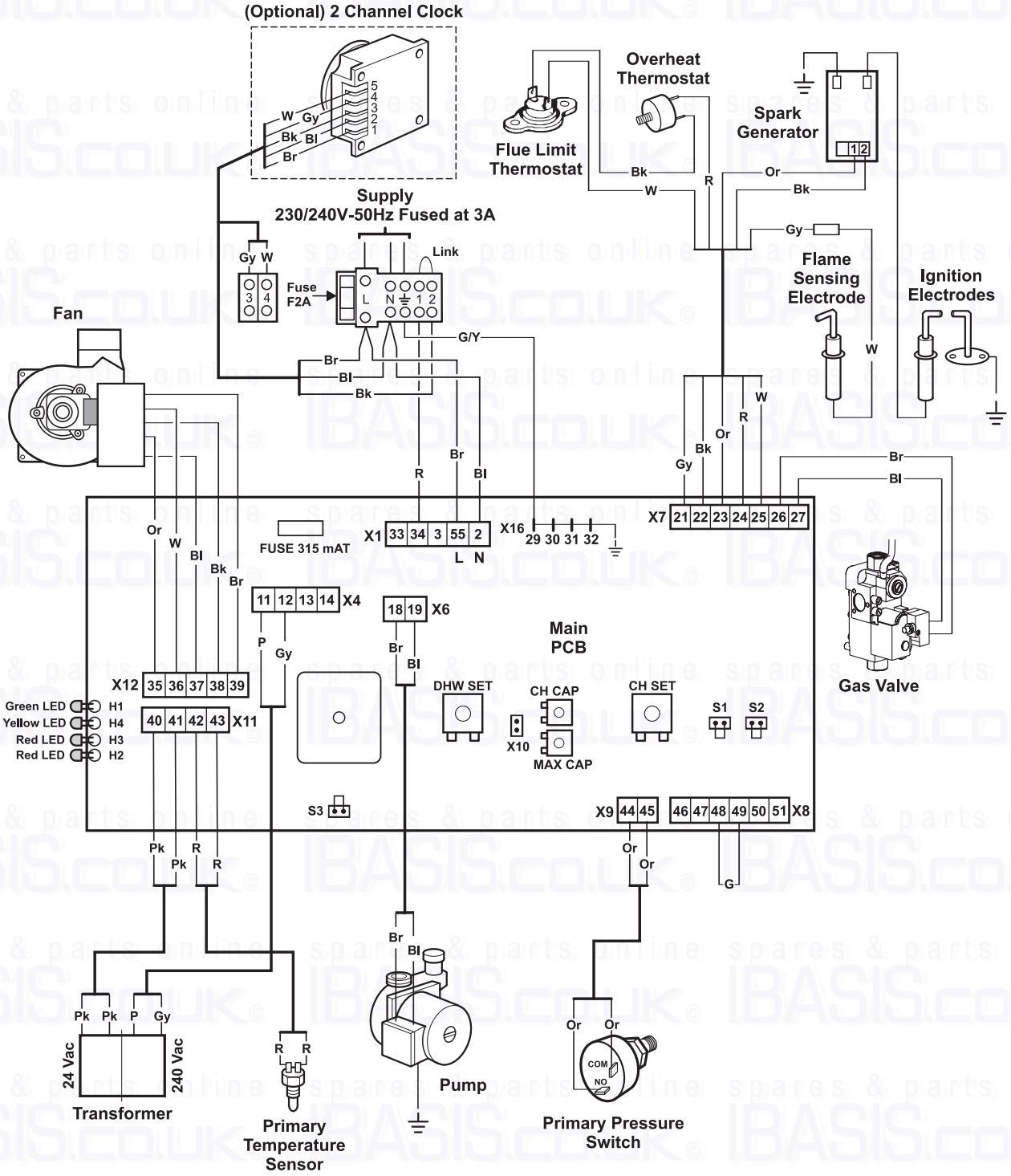

Br - Brown
Bk - Black
Bl - Blue
R - Red
Or - Orange
G - Green
G/Y - Green/Yellow
W - White
Gy - Grey
Pk - Pink
P - Purple

NOTE: TO CONNECT EXTERNAL CONTROL REMOVE LINK FROM TERMINALS 1 & 2 AND CONNECT 230/240 V SWITCHED LIVE TO TERMINAL1.

A FROST THERMOSTAT IS INCORPORATED WITHIN THE MAIN PCB

9.2 FUNCTIONAL FLOW WIRING DIAGRAM

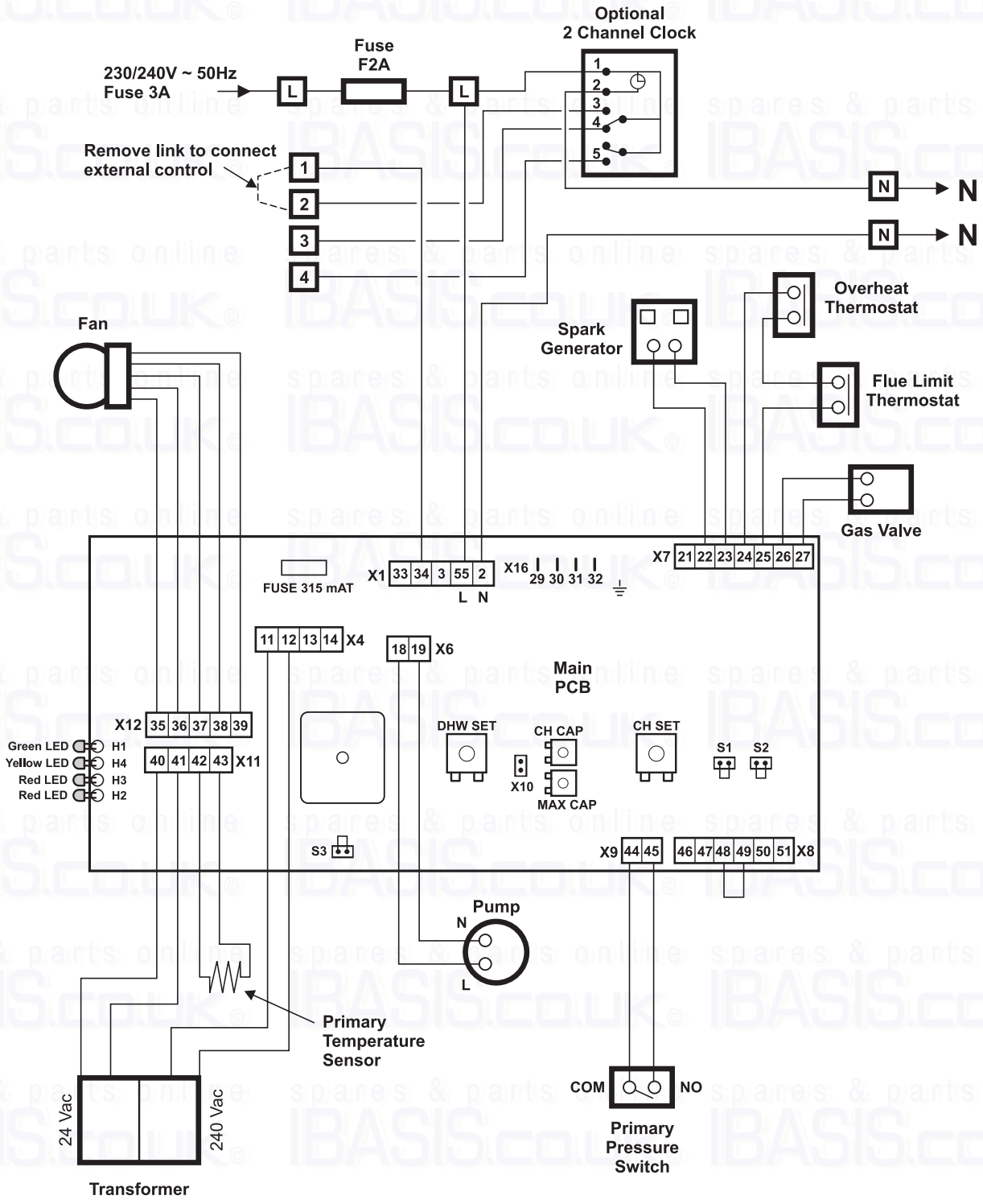

Note: ☐ Main Terminal Block

TO CONNECT EXTERNAL CONTROL REMOVE LINK FROM TERMINALS 1 AND 2 AND CONNECT 240 V SWITCHED LIVE TO TERMINAL 1.

10 FAULT FINDING

10.1 CARRY OUT INITIAL FAULT FINDING CHECKS

1. Check that gas, water and electrical supplies are available at the boiler.
   i.e. Inlet gas pressure = 20 mbar
   Electrical supply = 230/240 V ~ 50 Hz
   CH water system pressurised to between 0.75 and 1.25 bar
2. Carry out electrical system checks, i.e. Earth Continuity, Resistance to Earth, Short Circuit and Polarity with a suitable meter.
   Note: These checks must be repeated after any servicing or fault finding.
3. Ensure all external controls are calling for heat and check all external and internal fuses.
4. Check that the gas and water pipework has been connected to the correct connections on the boiler and all valves are open.

However, before any servicing or replacement of parts ensure the gas and electrical supplies are isolated.

10.2 CENTRAL HEATING - Follow operational sequence

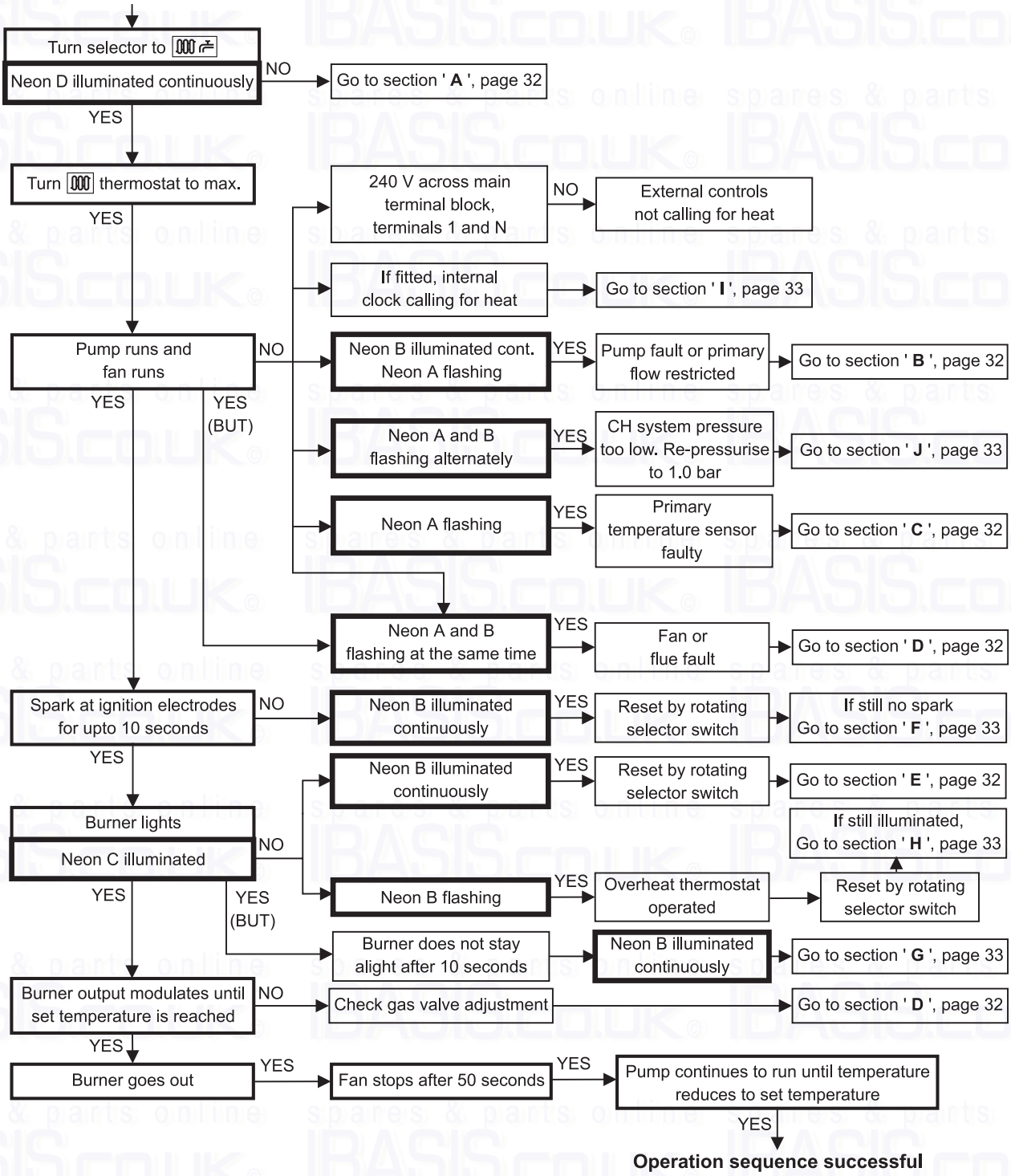

10.2 FAULT FINDING SOLUTIONS A to E

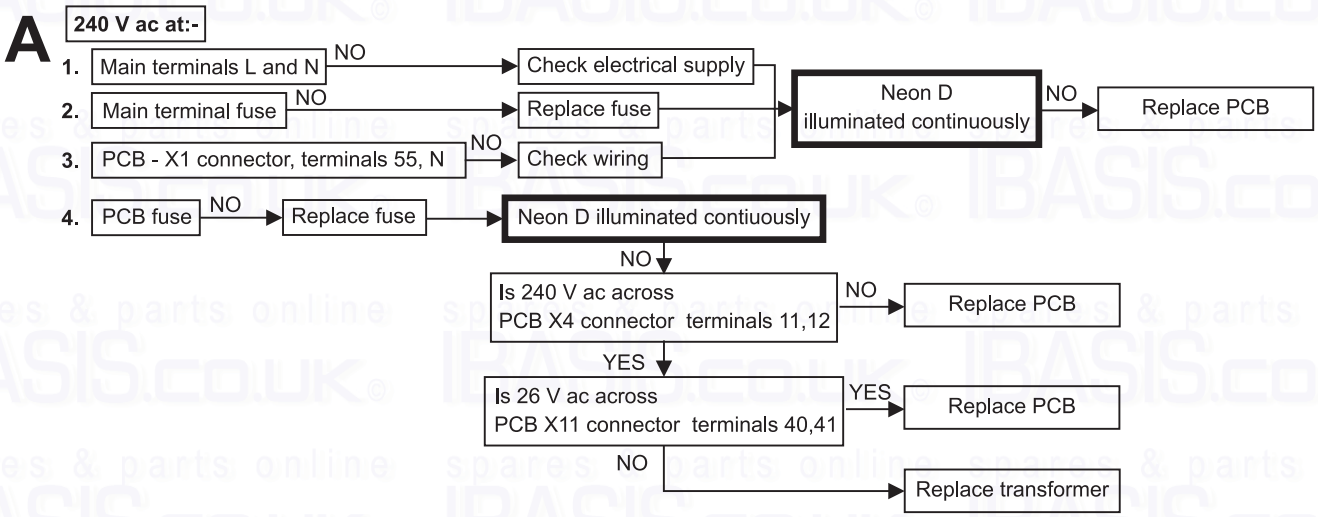

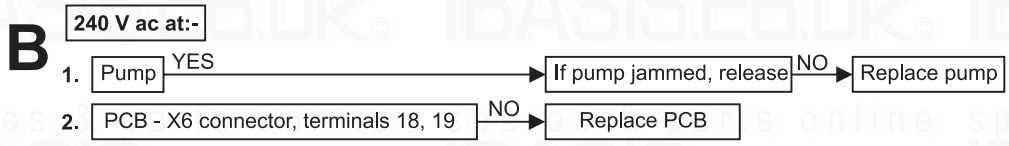

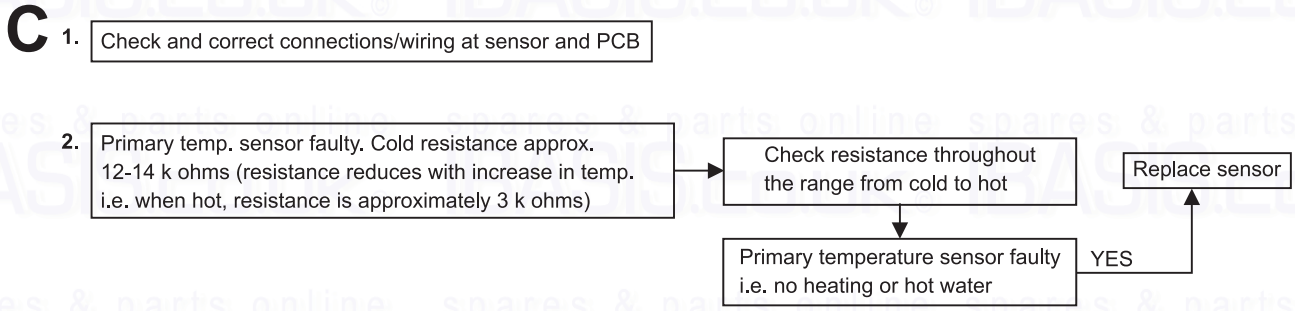

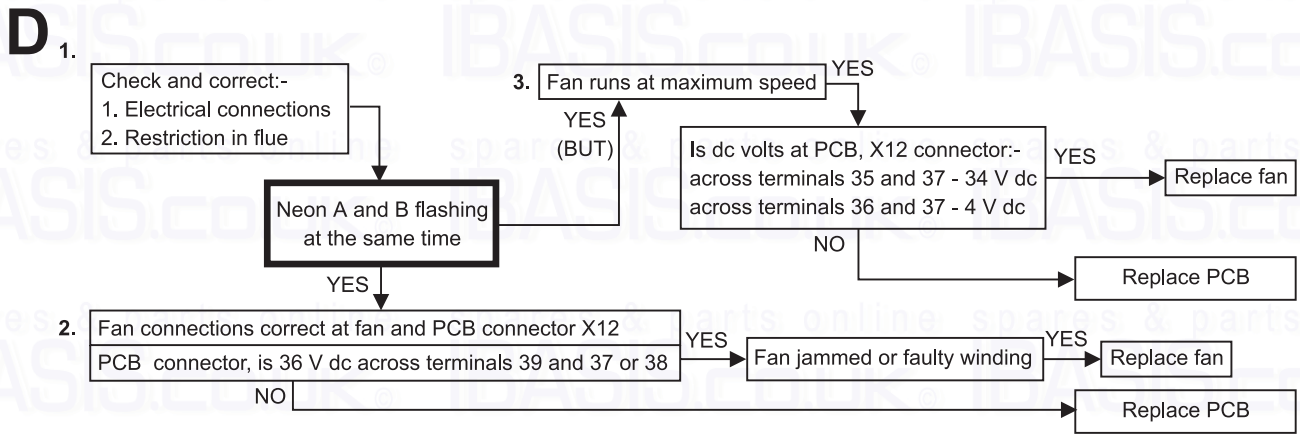

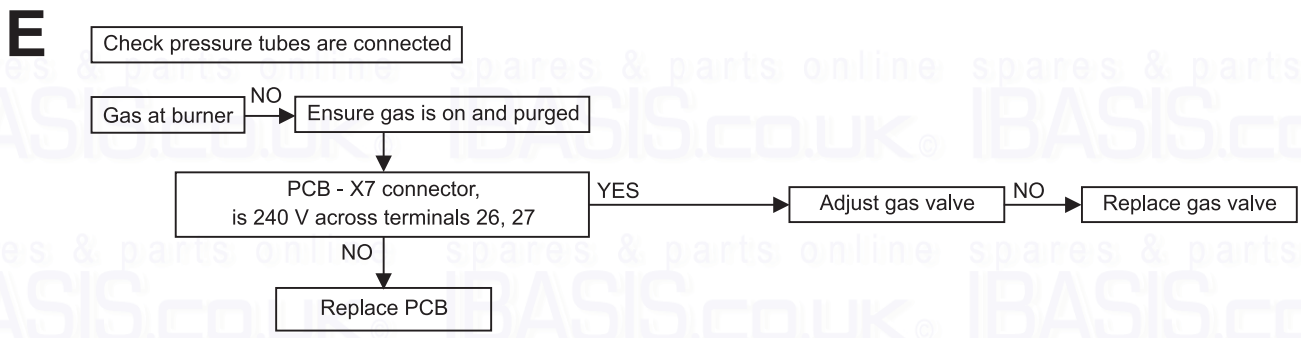

10.3 FAULT FINDING SOLUTIONS F to K

F

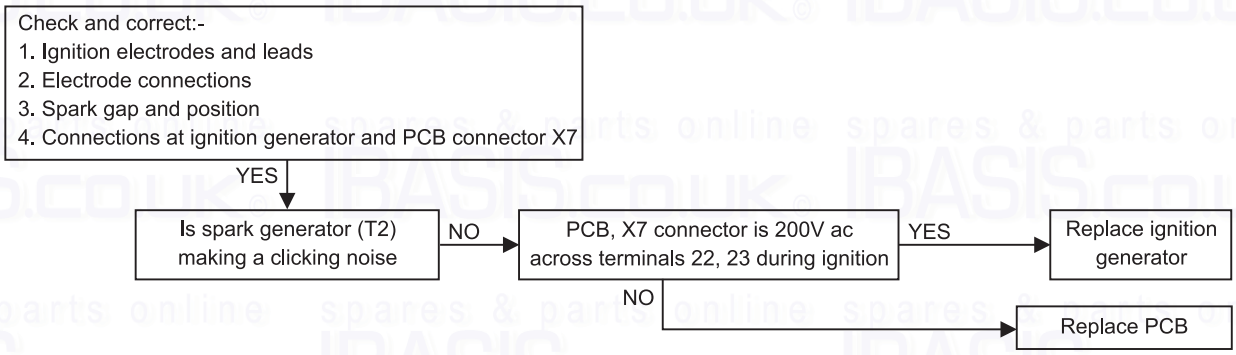

G

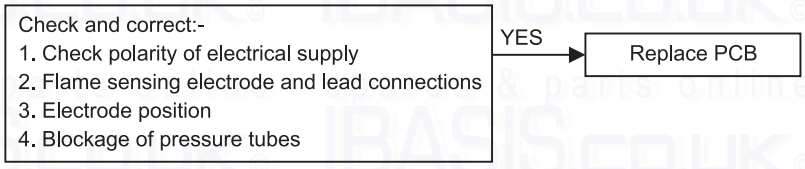

H

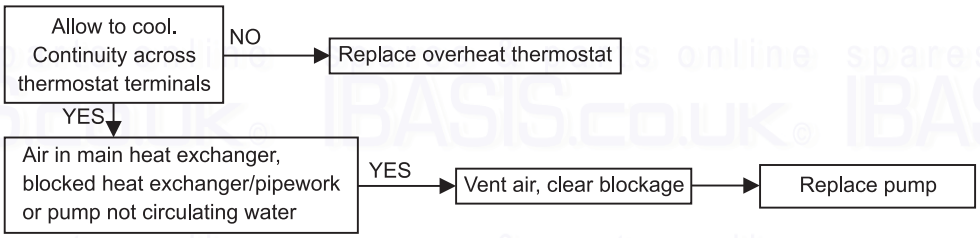

I

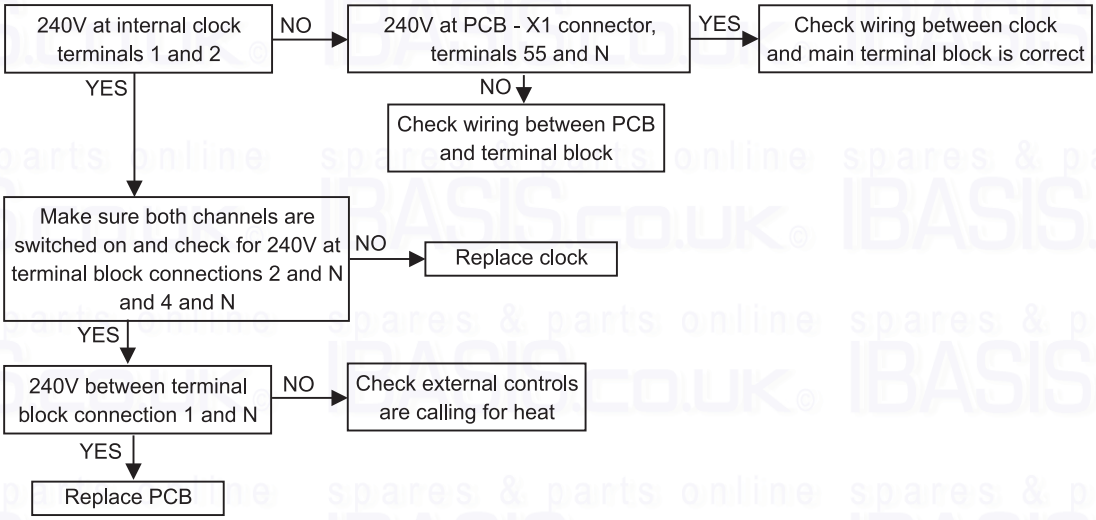

J

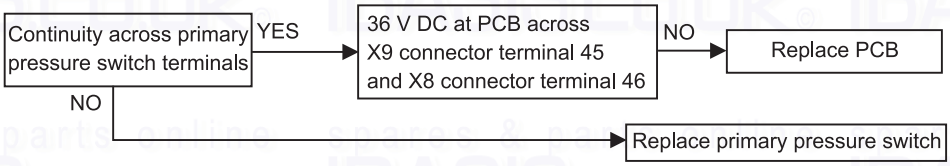

11 SHORT PARTS LIST

Reference	Description	Qty.	Alpha Pt. No.	British Gas GC No.
Fig. 27	Burner - CD18/24	1	1.013172	E94-407
Fig. 27	Burner - CD30	1	1.018956	E96-565
Fig. 2A/2B, item 6/31	Main injector 5.0 mm - CD18/24	1	1.011848	E94-409
Fig. 2B, item 31	Main injector 6.6 mm - CD30	1	1.019247	E96-566
Fig. 32	Primary heat exchanger - CD18/24	1	1.018030	E94-408
Fig. 32	Primary heat exchanger - CD30	1	1.018593	E96-567
Fig. 24	Gas valve - Honeywell VK4115V	1	1.011846	E94-410
Fig. 33	Pump	1	1.015610	E57-666
Fig. 28	Fan assembly - CD18/24	1	1.010659	E94-411
Fig. 28	Fan assembly - CD30	1	1.016623	E96-569
Fig. 33	Primary pressure switch	1	1.017496	E76-320
Fig. 30	PCB	1	1.017788	E94-412
Fig. 28	Flue thermostat	1	1.012067	E94-413
Fig. 28	Ignition generator	1	1.018162	E94-414
Fig. 28	Transformer	1	1.012477	E94-415
Figs. 34 and 28	Temperature sensor	2	1.015970	E76-317
Fig. 20	Fuse F2A	1	1.6098	E76-378
Fig. 30	PCB fuse F315mA	1	1.013931	E96-571
Fig. 28	Overheat thermostat	1	1.018031	E94-416
Fig. 2A,2B, item 14	Expansion vessel 8 Litre	1	1.015394	E57-702
Fig. 33	Pressure relief valve 3 bar	1	1.011126	E57-703
Fig. 33	Automatic air vent	1	1.010771	E57-709
Fig. 33	Pressure gauge	1	1.016151	E57-710
Fig. 28	Ignition electrode and lead	1	3.013626	E94-417
Fig. 28	Ignition electrode	1	1.016779	E94-418
Fig. 28	Flame sensing electrode and lead - CD18/24	1	1.018163	E94-419
Fig. 28	Flame sensing electrode and lead - CD30	1	1.019293	E96-572
Fig. 2A,2B, item 26/27	By-pass assembly	1	3.012801	E65-498
Fig. 27	Combustion chamber insulation panel front	1	1.014732	E94-420
Fig. 25	Condensate trap	1	1.011844	H01-874

12 benchmark CHECKLIST

Ensure the following is completed after the boiler has been installed and commissioned:-

BOILER SERIAL No. ..... NOTIFICATION No. .....

***CONTROLS** To comply with the Building Regulations, each section must have a tick in one or other of the boxes*

Time & temperature control to heating	room t/stat & programmer/timer	☐	Programmable roomstat	☐
Time & temperature control to hot water	cylinder t/stat & programmer/timer	☐	Combi boiler	☐
Heating zone valves	Fitted	☐	Not required	☐
Hot water zone valves	Fitted	☐	Not required	☐
Thermostatic radiator valves	Fitted	☐		
Automatic by-pass to system	Fitted	☐	Not required	☐

FOR ALL BOILERS CONFIRM THE FOLLOWING:

The system has been flushed in accordance with the boiler manufacturer's instructions? ☐ Yes ☐ No

The system cleaner used .....

The inhibitor used .....

FOR CENTRAL HEATING MODE, MEASURE AND RECORD THE FOLLOWING:

Gas rate			☐ m³/hr	☐ ft³/hr
Burner operating pressure (if applicable)	☐ N/A		☐ mbar	
Central heating flow temperature			☐ °C	
Central heating return temperature			☐ °C	

FOR COMBINATION BOILERS ONLY

Has a water scale reducer been fitted? ☐ Yes ☐ No

What type of scale reducer has been fitted? .....

FOR DOMESTIC HOT WATER MODE, MEASURE AND RECORD THE FOLLOWING:

Gas rate			☐ m³/hr	☐ ft³/hr
Maximum burner operating pressure (if applicable)	☐ N/A		☐ mbar	
Cold water inlet temperature			☐ °C	
Hot water outlet temperature			☐ °C	
Water flow rate			☐ lts/min	

FOR CONDENSING BOILERS ONLY CONFIRM THE FOLLOWING:

The condensate drain has been installed in accordance with the manufacturer's instructions? ☐ Yes

FOR ALL INSTALLATIONS CONFIRM THE FOLLOWING:

The heating and hot water system complies with current Building Regulations ☐ Yes

The appliance and associated equipment has been installed and commissioned in accordance with the manufacturer's instructions ☐ Yes

If required by the manufacturer, have you recorded a CO/CO_2 ratio reading ☐ N/A ☐ Yes ☐ CO/CO_2 ratio

The operation of the appliance and system controls have been demonstrated to the customer ☐ Yes

The manufacturer's literature has been left with the customer ☐ Yes

COMMISSIONING ENG'S NAME:

Print ..... CORGI ID No. .....

Sign ..... Date .....

13 SERVICE RECORD

It is recommended that your heating system is serviced regularly and that you complete the appropriate Service Interval Record below.

Service Provider: Before cpmpleting the appropriate Service Interval Record below, please ensure you have carried out the service as described in this instruction manual. Always use the manufacturer's specified spare parts when replacing all controls.

SERVICE 1: Date .....
Engineers Name .....
Company Name .....
Telephone No. .....
CORGI ID card serial No. .....
Comments .....
.....
Signature .....

SERVICE 2: Date .....
Engineers Name .....
Company Name .....
Telephone No. .....
CORGI ID card serial No. .....
Comments .....
.....
Signature .....

SERVICE 3: Date .....
Engineers Name .....
Company Name .....
Telephone No. .....
CORGI ID card serial No. .....
Comments .....
.....
Signature .....

SERVICE 4: Date .....
Engineers Name .....
Company Name .....
Telephone No. .....
CORGI ID card serial No. .....
Comments .....
.....
Signature .....

SERVICE 5: Date .....
Engineers Name .....
Company Name .....
Telephone No. .....
CORGI ID card serial No. .....
Comments .....
.....
Signature .....

SERVICE 6: Date .....
Engineers Name .....
Company Name .....
Telephone No. .....
CORGI ID card serial No. .....
Comments .....
.....
Signature .....

SERVICE 7: Date .....
Engineers Name .....
Company Name .....
Telephone No. .....
CORGI ID card serial No. .....
Comments .....
.....
Signature .....

SERVICE 8: Date .....
Engineers Name .....
Company Name .....
Telephone No. .....
CORGI ID card serial No. .....
Comments .....
.....
Signature .....

SERVICE 9: Date .....
Engineers Name .....
Company Name .....
Telephone No. .....
CORGI ID card serial No. .....
Comments .....
.....
Signature .....

SERVICE 10: Date .....
Engineers Name .....
Company Name .....
Telephone No. .....
CORGI ID card serial No. .....
Comments .....
.....
Signature .....

Alpha BOILERS

Alpha Therm Limited.
Nepicar House, London Road, Wrotham Heath,
Sevenoaks, Kent TN15 7RS
Tel: 0870 3001964

email: info@alphatherm.co.uk
website: www.alpha-boilers.com

These instructions have been carefully prepared but we reserve the right to alter the specification at any time in the interest of product improvement.
© Alpha Therm Limited 2005.

Part No. 1.023384 Rev 15.021103/000

Manual compiled and designed by Publications 2000 - Tel: (01670) 356211 08/05/D190