Installation and Servicing Instructions

Alpha CombiMax 350 and 600

Unvented Hot Water Store
for use with the
Alpha 240/280 Range of Gas Fired Combination Boilers

For Technical help or for Service call ...

ALPHA HELPLINE

Tel: 0870 3001964

Alpha BOILERS

Nepicar House, London Road,
Wrotham Heath, Sevenoaks,
Kent TN15 7RS

These instructions must be used in conjunction with the Installation instructions provided with the selected combination boiler.

WRc

Building Regulations
Certificate No. ETC 03198

Leave these instructions with the User

CONTENTS

1 Introduction 2
2 Technical data 3
3 Installation information 5
4 Installation 7
5 Commissioning 11
6 Operation 13
7 Routine servicing 13
8 Component replacement 14
9 Wiring diagrams 16
10 Short parts list 17
11 Fault finding 17
12 Appendix 1 (remote location) 18

1 INTRODUCTION

The CombiMax is a wall mounted unvented secondary hot water storage cylinder for use with the Alpha 240/280 range of gas fired combination boilers.

Two models are available - the CombiMax 350 with a 35 litre capacity and the CombiMax 600 with a 60 litre capacity.

The store is supplied with a pump, thermostats, pressure reducing valve, check valve, expansion vessel, expansion relief valve, temperature/pressure relief valve and tundish. It is also supplied with all the required fittings and pipework to enable connection to the selected Alpha combination boiler.

The CombiMax provides hot water at temperatures of up to 56°C at flow rates of up to 18 l/min (4 gal/min).

Note: To enable this flow rate to be achieved:-

1. The cold water mains supply must be able to deliver 22 l/min to the appliance.
2. Pipework to the hot water outlets should be as short as is practical and have minimal pressure loss.

The CombiMax can be converted to enable a secondary circulation loop to be connected to it, thus supplying domestic hot water immediately a hot water tap is opened. The CombiMax pump is used to circulate the hot water within the loop. For full details contact Alpha Therm Ltd.

The CombiMax storage cylinder has the facility for fitting an electric immersion heater (which **must** be obtained from Alpha Therm Ltd.) and an external clock for timing the domestic hot water operation.

IMPORTANT

This appliance has been approved to the Building Regulations for unvented hot water storage systems and the Local Authority must be notified of the intention to install. Therefore the installation must be carried out by a person competent to install unvented hot water systems in accordance with the following recommendations:-

All relevant Building Regulations issued by the Department of the Environment

Building Standards (Scotland) (Consolidation) Regulations issued by the Scottish Development Department

Local Water Bye Laws

Health & Safety Document No. 635 (The Electricity At Work Regulations 1989)

The installation should also be in accordance with the following British Standard Codes of Practice:-

BS 5546:1990	Installation of hot water supplies for domestic purposes
BS 6700:1987	Design, installation, testing and maintenance of services supplying water
BS 7671:1992	Requirements for electrical installations, IEE Wiring Regulations

Failure to install this appliance correctly could lead to prosecution. It is in your own interest and that of safety to ensure that the law is complied with.

Manufacturer's instructions must **NOT** be taken in anyway as over-riding statutory obligations.

NOTE: Failure to use an Alpha boiler with the CombiMax will invalidate its approval, warranty and may be unsafe.

2 TECHNICAL DATA

2.1 DOMESTIC HOT WATER

Domestic Hot Water		
Max. Mains Inlet Pressure (inlet of pressure reducing valve)		8 bar
Min. Mains Water Pressure		0.1 bar
Mains Inlet Connection		15 mm
DHW Outlet Connection		15 mm
DHW Storage	(350 model)	35 L
	(600 model)	60 L
Expansion Vessel Size (pre-charge press.)		
	(350 model)	4 L at 2.5 bar
	(600 model)	5 L at 2.5 bar
Pressure Reducing Valve Setting		2.5 bar
Temperature and Pressure Relief Valve		90°C/7 bar
Expansion Relief Valve Setting		4 bar
Flow Rate	L/min	18.0
	G.P.M.	4.0
Outlet Water Temp. (Approx.)	°C	56
	°F	133
Time to raise water storage 50°C	(350 model)	7.25 mins
	(600 model)	12 mins
Reheat time for 70% of storage	(350 model)	4.0 mins
	(600 model)	7 mins

2.2 INSTALLATION

Min. Clearances required for Servicing		
	Top	220 mm
	Bottom	250 mm
	Sides	5 mm
	Front	450 mm
Dimensions CombiMax	Height	950 mm
(350 model)	Width	270 mm
(600 model)	Width	365 mm
	Depth	360 mm
Overall width when fitted with boiler		
	(350 model)	720 mm
	(600 model)	815 mm
Lift Weight of Store	(350 model)	12 kg
	(600 model)	25 kg
Weight Full and Operational	(350 model)	92 kg
(CombiMax and Boiler)	(600 model)	130 kg

2.3 ELECTRICAL

Supply	230/240 V ~ 50 Hz
External Fuse	3 A
Power Consumption	90 W

Alpha Immersion Heater (optional)

Supply	230/240 V ~ 50 Hz
External Fuse	10 A
Power Consumption	2 kW

2.4 ELECTRICAL CONNECTIONS

Note: This Appliance Must Be Earthed

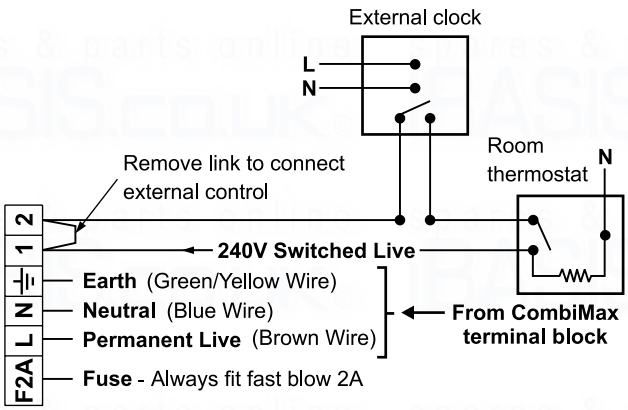

Boiler terminal block

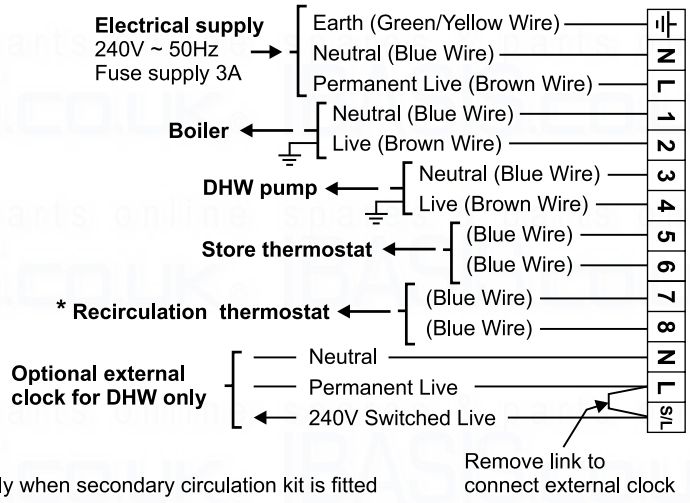

CombiMax terminal block

2.5 COMBIMAX SCHEMATIC

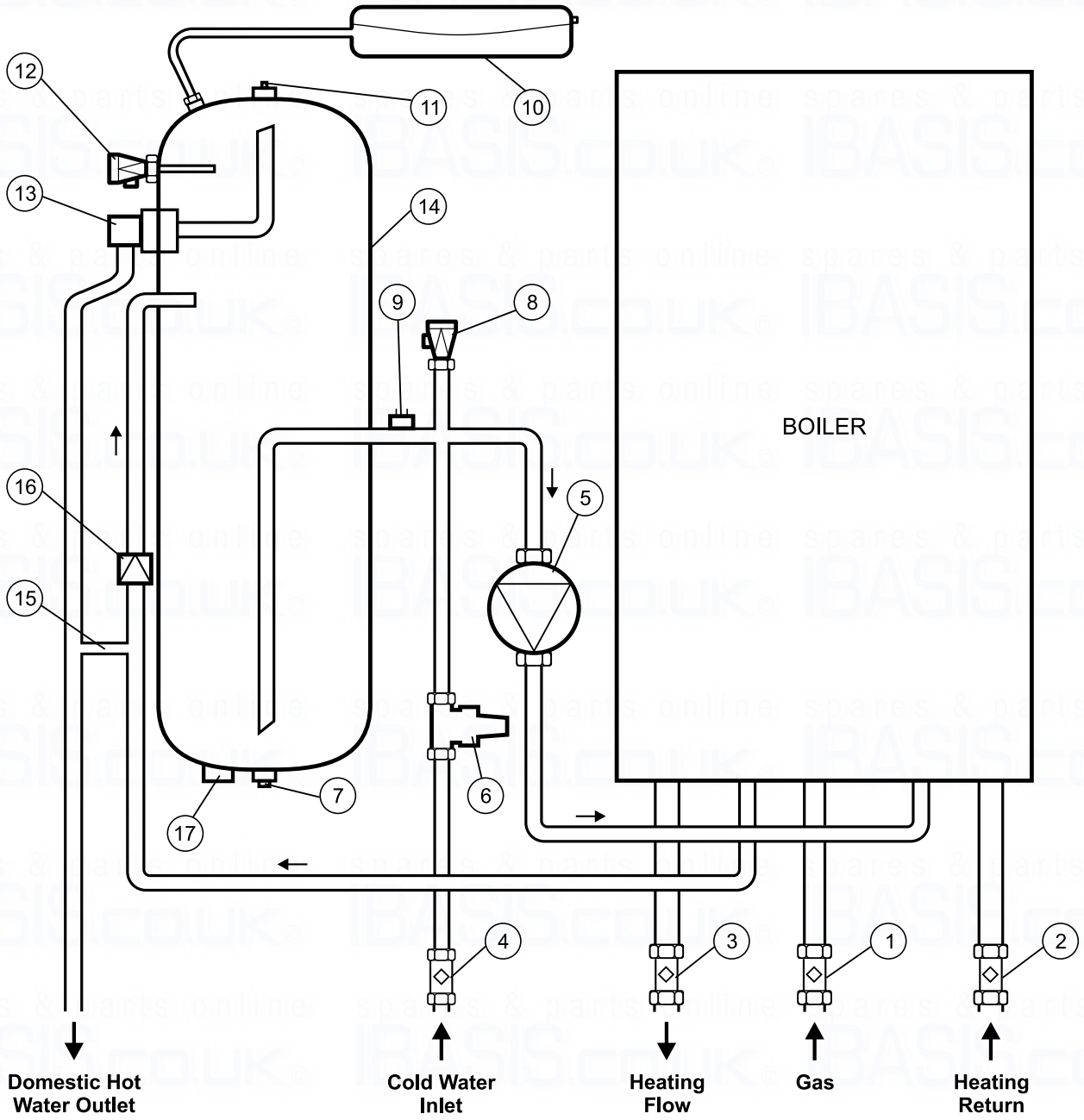

1. Gas service cock
2. On/Off valve and filter
3. On/Off valve
4. On/Off valve and filter
5. DHW pump
6. Pressure reducing valve with filter and check valve
7. Drain point
8. DHW expansion relief valve
9. Store thermostat
10. DHW expansion vessel
11. Manual air vent
12. DHW temperature/pressure relief valve
13. DHW outlet thermostat
14. Storage cylinder
15 Boiler flow control regulator
16 Non return valve
17 Immersion heater boss

3 INSTALLATION INFORMATION

3.1 ELECTRICAL SUPPLY

The CombiMax requires a 230/240 V ~ 50 Hz electrical mains supply.

This appliance must be earthed.

The mains supply to the CombiMax and boiler must be directly connected to the CombiMax terminal block, i.e. not the boiler. A supply cable from the CombiMax terminal block has been provided for connection to the boiler terminal block.

Notes: **1.** If an external control is to be fitted, it must be suitable for 240 V and it **must** be connected to the **boiler** terminal block.
2. If an external DHW clock is to be fitted, it must be suitable for 240 V and it **must** be connected to the **CombiMax** terminal block.

There must only be one common isolator, providing complete electrical isolation, for the CombiMax, boiler and any external controls. However, if an immersion heater is to be fitted, an independant electrical supply must be provided. Refer to the instructions supplied with the Alpha immersion heater kit.

The appliance should be connected to a fused three pin plug and unswitched shuttered socket outlet (both complying with BS 1363), or a fused double pole switch with a contact separation of at least 3 mm in both poles using heat resisting cable (i.e. 85°C) not less than 0.75 mm² (24 x 0.2 mm) to BS 6500 Table 9.

Wiring external to the boiler must be in accordance with the current IEE Wiring Regulations (BS 7671).

Note: If an immersion heater is to be fitted, this **must** be supplied by Alpha Therm Ltd. and be installed as per the instructions supplied with the kit. A standard 3 kW immersion heater **must** not be fitted.

DHW CLOCK - Sometimes it may be required to switch off the CombiMax and, if fitted, the secondary circulation overnight to avoid unnecessary heat loss and operation of the appliance. This can be achieved by connecting an external clock to the 'Ext Prog' terminals on the CombiMax terminal block, as shown in section 2.4.
Note: When the clock is in an OFF position the CombiMax will not operate, i.e. hot water will only be supplied from the water left within the storage cyliner. Therefore the OFF periods should be set at times when hot water will not be required.

If a secondary circulation kit is to be fitted, refer to the instructions supplied with the kit.

3.2 LOCATION

The appliance is not suitable for external installation.

The CombiMax and boiler must be installed on a flat vertical wall which is capable of supporting a weight of approximately 92 kg (350 model) or 130 kg (600 model)..

The CombiMax may be installed in any room or internal space, although particular attention is drawn to the requirements of the current IEE Wiring Regulations, and in Scotland, the electrical provisions of the Building Regulations applicable in Scotland, with respect to the installation in a room or internal space containing a bath or shower. Where it is installed in a room containing a bath or shower, it must not be possible for a person using the bath or shower to touch any electrical switch or boiler control utilising mains electricity.

The appliance may be installed in a cupboard or compartment, provided it is correctly designed for that purpose and that the requirements of BS 6798 are complied with.

The appliance does not require any air vents for cooling in the room in which it is installed or when installed in a cupboard or compartment.

If required, the CombiMax (produced after February 1999, i.e. from serial No. A906) may be located remotely (up to 1 metre) from the boiler. Refer to Appendix 1, starting on page 18.

3.3 DOMESTIC HOT WATER SYSTEM

To ensure a hot water flow rate of 18 l/min the mains water supply must be capable of delivering 22 l/min to the appliance at 2 bar.

The incoming mains water pressure is regulated to 2.5 bar within the Combimax by a pressure reducing valve. However, all taps and mixing valves used with the hot water system must be suitable for operating at a pressure of up to 8 bar.

To ensure economic use, the pipe runs between the appliance and taps should be in 15 mm copper pipe and be as short as possible. Where possible the pipework should be insulated to reduce heat loss.

Showers - A shower may be used with the CombiMax if required.
If a loose or flexible head type shower is used it may require the fitting of a double check valve, to comply with Water Bye Law 17.

Bidets - No anti-syphonage arrangements are necessary, provided the outlets are shrouded and it is not possible to attach a temporary hand held spray. A supply of direct mains fed hot and cold water is permitted provided the appliance is of the over-rim flushing type.

Before the mains water supply pipe is connected, it should be thoroughly flushed out to avoid the danger of dirt or foreign matter entering the CombiMax or boiler and the filter incorporated within the pressure reducing valve cleaned.

The stored water temperature is approximately 56°C. In hard water areas this should avoid possible scale build-up. However, if descaling is necessary contact Alpha Therm Ltd. for guidance.

3.4 UNVENTED HOT WATER STORAGE SYSTEM

The installation is subject to Building Regulations approval and the Local Authority must be notified of the intent to install.

The CombiMax store is supplied with the components required for an unvented hot water system, i.e. temperature/pressure and expansion relief valves, expansion vessel, check valve and tundish. All these components are factory fitted, except for the expansion vessel, which is to be connected to the top of the storage cylinder after installation, and the tundish which must be installed as follows:-

Discharge pipe - The discharge pipes from both the temperature/pressure and expansion relief valves have been joined together within the appliance. The combined discharge pipe from the appliance must be routed to the tundish supplied in 15 mm pipe.

Tundish - The tundish must be positioned within 500 mm of the appliance, so that it is visible to the User and away from electrical devices. The minimum size of the discharge pipe downstream of the tundish is given in the following table.

Sizing of copper discharge pipe 'D2' - refer also to Figs. 1a and 1b				
Valve outlet size	Minimum size of discharge pipe 'D1' to tundish	Minimum size of discharge pipe 'D2' from tundish	Maximum resistance allowed, expressed as a length of straight pipe (i.e. no elbows or bends)	Resistance created by each elbow or bend
G½	15 mm	22 mm	up to 9 m	0.8 m
		28 mm	up to 18 m	1.0 m
		35 mm	up to 27 m	1.4 m

The discharge pipework from the tundish:-

a. Shall fall continuously through its length.
b. Shall be of a heat resistant material, e.g. metal.
c. Shall not be fitted with any valves or taps.
d. Shall discharge to a safe visible position, e.g. onto the surface of an external wall or into a gulley.
e. Shall have a minimum of 300 mm straight pipework directly from the tundish.

Note: Where children may play or otherwise come into contact with discharges, a wire cage or similar guard must be positioned to prevent contact whilst maintaining visibility.

Refer to Figs. 1a and 1b for suggested methods of terminating the discharge pipe safely.

Where a single pipe serves a number of discharges, such as in blocks of flats, the number served should be limited to not more than 6 systems so that any installation can be traced reasonably easily. The single common discharge pipe should be at least one pipe size larger than the largest individual discharge pipe to be connected.

If the system is installed where discharges from safety devices may not be apparent, i.e. in dwellings occupied by blind, infirm or disabled people, consideration should be given to the installation of an electronically operated device to warn when discharge takes place.

LOW LEVEL TERMINATION

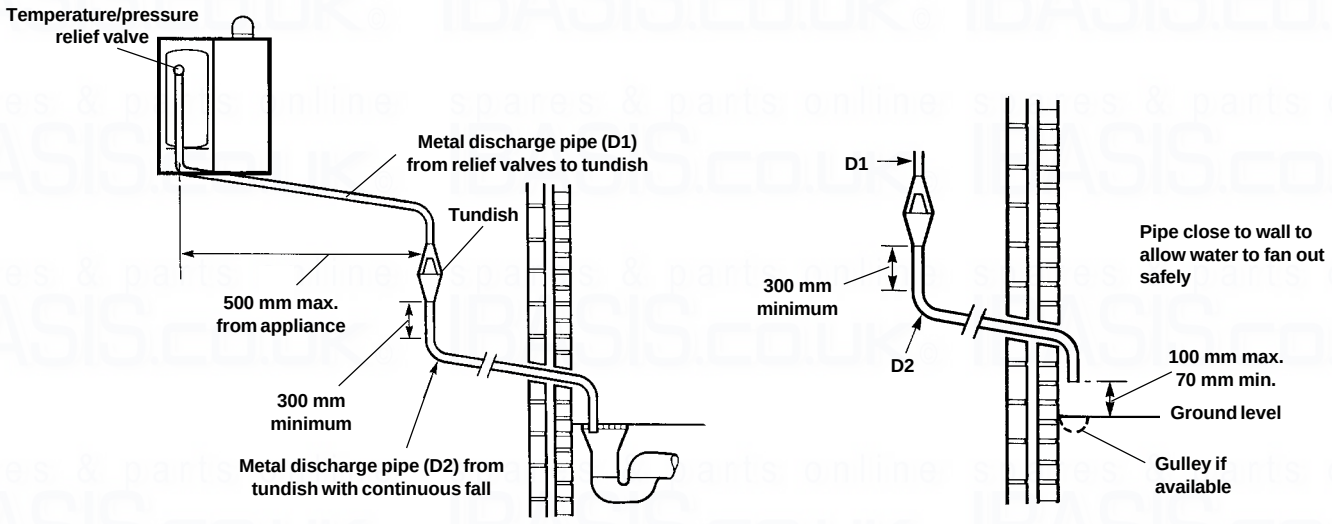

Fig. 1a

HIGH LEVEL TERMINATION

At high level, discharge onto a roof is acceptable providing the roof is capable of withstanding high temperatures and there is a distance of 3 m from any plastic guttering systems that would collect such discharge.

Note: The discharge will consist of scalding water and steam. Asphalt, roofing felt and non-metallic rainwater goods may be damaged by such discharges.

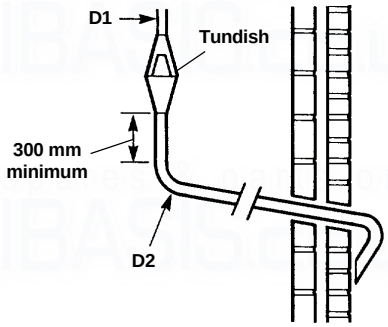

TERMINATION INTO A HOPPER

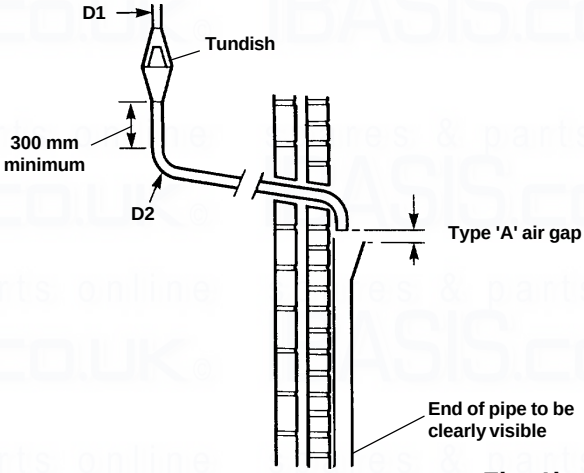

Fig. 1b

4 INSTALLATION

4.1 UNPACKING

The boiler must be installed before the CombiMax store, so therefore carefully unpack the CombiMax box, check and safely place all the components to one side until installation.
Note: To avoid damage, do not lift the store via the valves and pipework.

1. The CombiMax is supplied in one box containing the following:-
   a. Assembled CombiMax store complete with its casing support brackets, controls and wiring centre.
   b. Wall mounting frame.
   c. Expansion vessel (4 litre with 350 model and 5 litre with 600 model) with a pre-charge of 2.5 bar and flexible hose.
   d. Boiler connecting pipes, together with screws, wall plugs and washers.
   e. Literature pack and DHW control knob label.
   f. Boiler conversion kit with restrictor, spanner and boiler converted label.
2. Unpack the boiler as per the Installation instructions supplied with the boiler.

4.2 CLEARANCES REQUIRED - Fig. 2

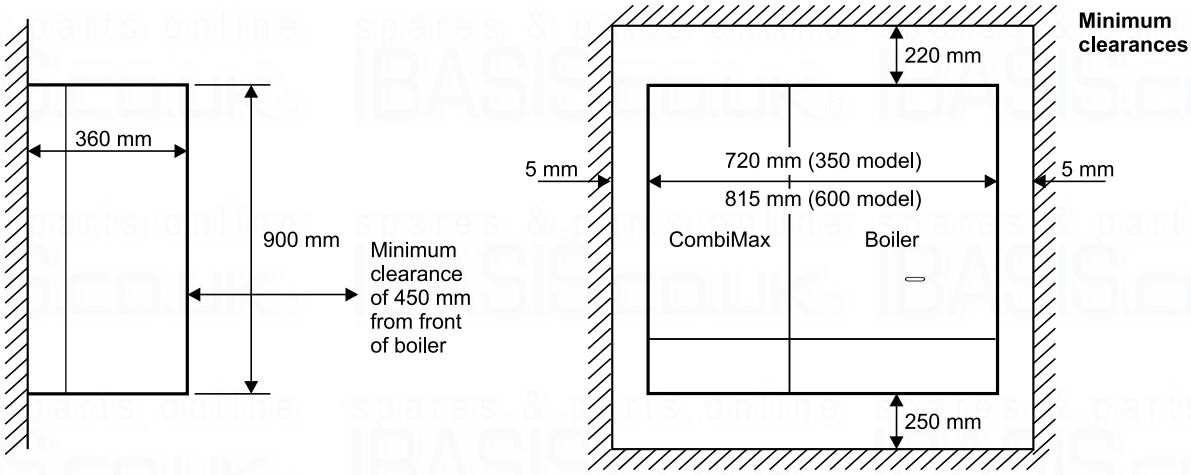

Fig. 2

4.3 CONVERT THE BOILER FOR FITTING THE COMBIMAX - Figs. 3, 4, 5 and 6

The boiler may be converted before or after mounting it onto the wall as described below.

When mounting the boiler onto the wall follow the installation instructions supplied with the boiler.

Note: Do not connect the pipework, electrical mains supply or fit the flue until the CombiMax has been fitted.

1. Lower the front cover and loosen the two fixing screws securing the control panel as shown in Fig. 3.
2. Remove the left hand side panel of the boiler by removing the top and two bottom screws as shown in Fig. 3.

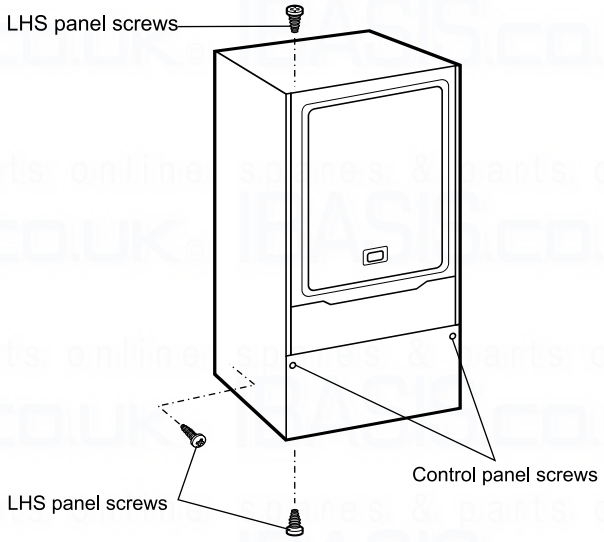

Fig. 3

3. Remove the differential pressure sensor from the boiler using the spanner provided as follows:-
   Disconnect the two flow sensing pipes from the right hand manifold, then unscrew and remove the end fitting containing the filter/restrictor as shown in Fig. 4.

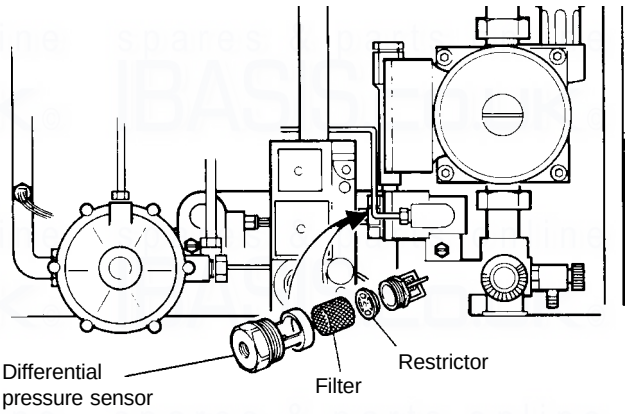

Fig. 4

4. Modify the differential pressure sensor (see Figs. 5 and 6) as follows:-
   a. Unscrew fitting 'A' and discard the components A, B and C as shown in Fig. 5.

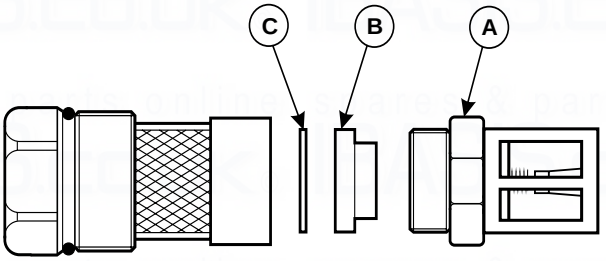

Fig. 5 - Differential pressure sensor BEFORE modification

   b. Screw fitting 'D' (supplied in the conversion kit) into the sensor body as shown in Fig. 6.

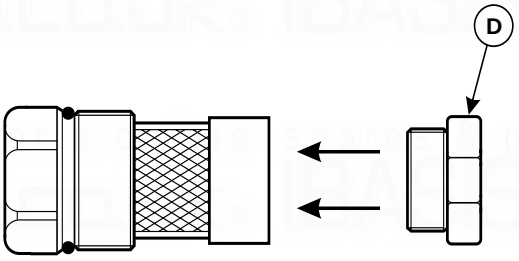

Fig. 6 - Differential pressure sensor AFTER modification

5. Re-assemble the differential pressure sensor into the boiler in reverse order.

Note: After converting the boiler, fit the label supplied in the conversion kit to the inside of the hinged cover so that it can be seen when the cover is lowered.

4.4 FIT THE COMBIMAX - Figs. 7 and 8

1. Locate the wall mounting frame over the top left hand panel of the combination boiler to ensure correct alignment.
2. Drill five wall fixing holes (8 mm dia.) through the mounting frame (as shown in Fig. 7) and secure with the screws and plugs provided.
3. Hang the storage cylinder on the mounting frame, ensuring the top and bottom brackets on the store locate on the supports on the frame (see Fig. 7). Pass the plastic security strap around the cylinder and secure in position (see Figs. 7 and 8).
4. Connect the flexible hose to the expansion vessel and locate it in the space above the boiler to the rear, with the connection to the left as shown in Fig. 8. Connect the expansion vessel hose to the connection on the top left hand side of the store. **CombiMax 600 only -** Secure the vessel to the right side rear of the boiler frame with the two screws provided.
5. Fit the side support bracket to the boiler in place of the boiler left hand side panel, securing at both top and bottom as shown in Fig. 8 (remove the front screw from the top of the room sealed chamber to secure the top of the bracket).
6. Fit the top support bracket (with two clips) to the top of the side support bracket and fit the bottom support bracket (with four clips) to the bottom of the side support using the screws provided.
7. Fit the left hand side panel, removed from the boiler, to the CombiMax by hooking the top of the panel over the brown trim of the mounting frame and securing it at the bottom rear of the panel. Secure the panel to the top and bottom support brackets using the screws provided.

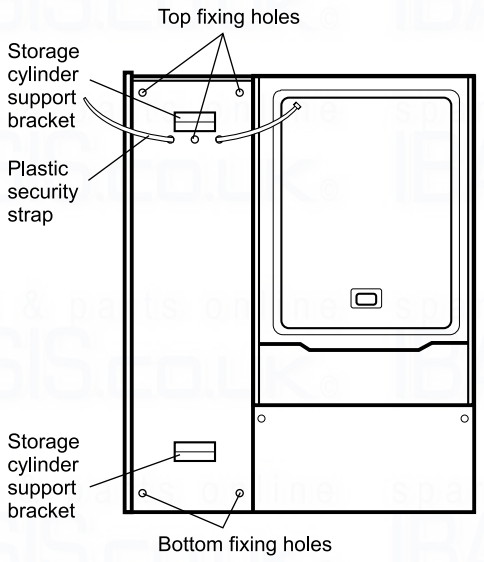

Fig. 7

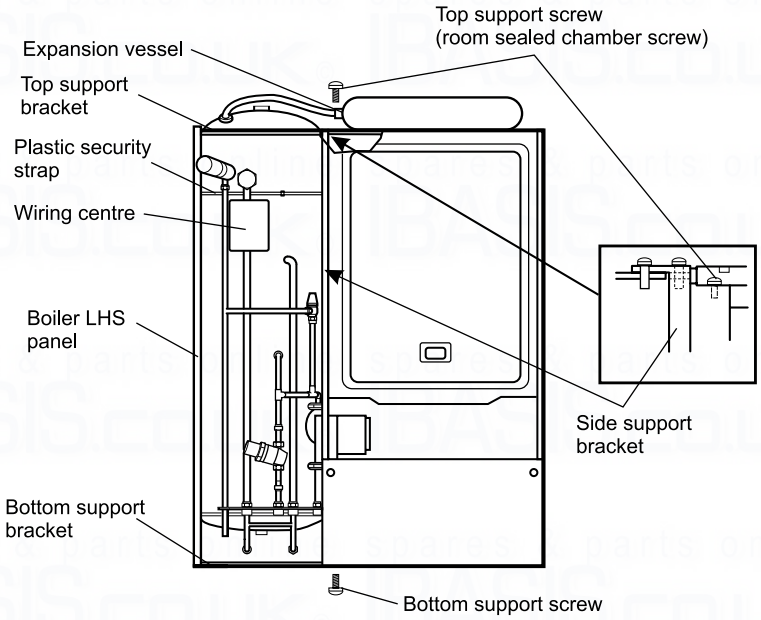

Fig. 8

4.5 FIT THE FLUE

Install the flue in accordance with the Installation instructions supplied with the boiler or flue.

4.6 CONNECT THE PIPEWORK - Fig. 9

1. Thoroughly flush out all the water pipework.
   Note: Ensure that all the plastic caps are removed from the boiler connections.
2. Secure all the valves/fittings between the CombiMax and boiler as shown in Fig. 9. Use the washers supplied and ensure the necessary fittings face the rear wall. Fit the union bends to the valves.

   Notes: a. If soldering to the boiler union bends, ensure the bends are not connected to the valves, otherwise the internal seals may be damaged.

   b. Ensure the 22 mm isolating valve with the filter is fitted to the heating return connection as shown in Fig. 9.

   c. Fit the pressure relief valve connection before the isolating valves.
3. Connect the system pipework to the boiler.
   Note: Do not forget that the heating system pressure relief valve discharge pipe must be routed clear of the boiler to a drain in such a manner that it may be seen, but cannot cause injury to persons or property.
4. Connect the discharge pipework from the temperature/pressure relief and expansion relief valves to the tundish supplied.
   Note: This pipework must be installed as recommended in Unvented Hot Water Storage System, section 3.4.

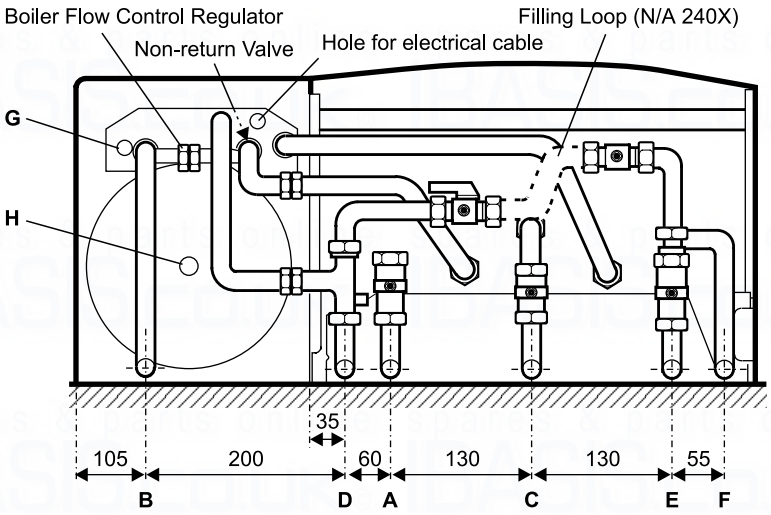

Fig. 9a - CombiMax 350

Note: Disconnect the filling loop after filling the central heating system.

A - Heating flow (22 mm)
B - Hot water outlet (15 mm)
C - Gas inlet (22 mm)
D - Cold water mains inlet (15 mm)
E - Heating return (22 mm)
F - Heating pressure relief valve (15 mm)
G - Temperature/pressure expansion relief discharge pipe
H - Drain point for DHW storage

Note: Both Heating return and Cold water mains inlet valves contain serviceable filters.

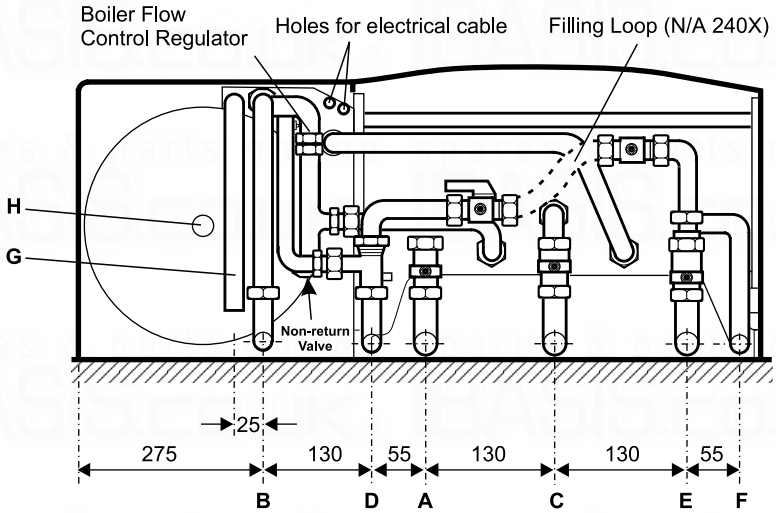

Fig. 9b - CombiMax 600

4.7 CONNECT THE MAINS SUPPLY - Figs. 9, 10 and 11

1. Remove the screws securing the CombiMax terminal block cover. Pass the electrical mains supply cable through the cable clamp on the boiler and route the cable to the CombiMax terminal block as shown in Fig. 10. Connect the cable as follows:- Brown to L, Blue to N and Green/Yellow to ⏚. Ensure correct polarity and that the cable is secured using the clamping bush supplied.
   Note: Ensure that the length of the earth wire is such that if the supply cable is pulled out of its clamp the live and neutral wires become taut before the earth wire.
   If an external DHW clock is to be fitted to the CombiMax terminal block, remove the link between terminals L and S/L, see section 2.4. Connect the clock cable to the 'Ext Prog' terminals N, L and S/L ensuring the cable is secured using the clamping bush supplied.
   If a secondary circulation kit and/or an Alpha immersion heater is fitted, refer to the instructions supplied with the kit.
   When all connections have been made to the CombiMax terminal block, replace the terminal block cover.
2. Remove the screw securing the terminal block cover from the back of the boiler control box as shown in Fig. 11. Route the cable provided from the CombiMax terminal block to the boiler (see Figs. 9 and 10) and connect to the boiler terminal block via the grommet as shown in Fig. 11. Refer to section 2.4 for connection details.
   The boiler main terminal block can be removed by pulling it off the pins to give easy access to the terminals.
   Do not switch on the electrical supply at this stage.
3. If an external control, i.e. room thermostat or external clock is to be fitted, remove the link between terminals 1 and 2 on the boiler terminal block. Pass the cable through the cable clamp, through the grommet (cut as necessary) and connect it to terminals 1 and 2, see section 2.4.
4. Replace the boiler terminal block, ensuring it is located correctly on the plastic pins and replace the cover.
5. Ensure that there is sufficient free cable to allow the control panel to be raised and lowered then tighten the cable clamp screws.
6. Leave the control panel open until commissioning procedures have been completed.
7. Carry out electrical system checks - Short circuit, Polarity, Earth continuity and Resistance to earth with a suitable multimeter.

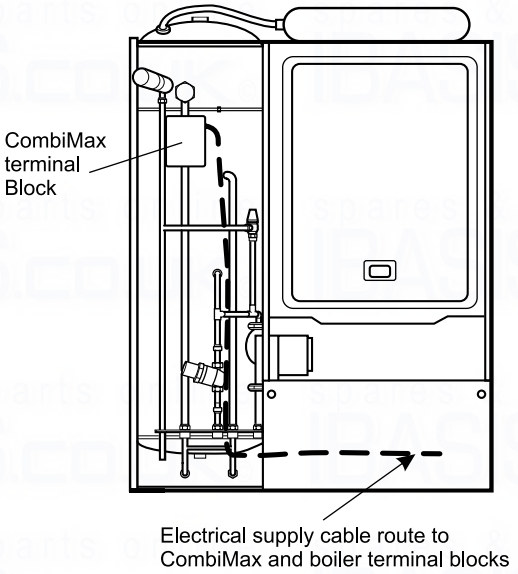

Fig. 10

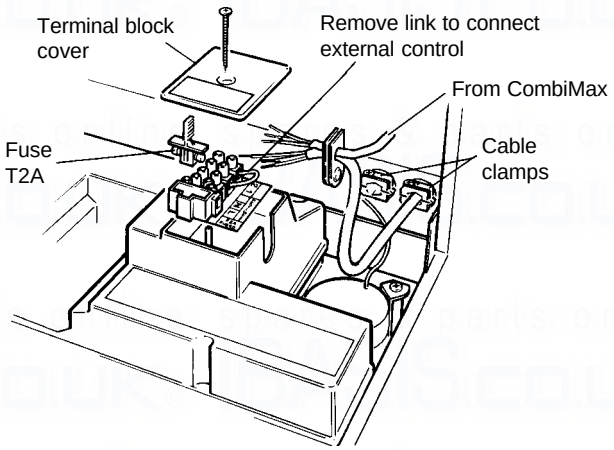

Fig. 11

5 COMMISSIONING

The boiler must be commissioned as described in the Installation instructions supplied with the boiler.

5.1 FILL THE DOMESTIC HOT WATER SYSTEM

Open the mains water inlet valve and allow the CombiMax store and boiler to fill. When filled, open the manual air vent on the top of the store (refer to schematic diagram in section 2.5) until all the air has been vented. Turn on all the hot water taps and allow water to flow until no air is present. Turn off the taps. Cover all electrical components beneath the CombiMax pump and then release the pump bleed screw until all the air has been vented. Retighten the screw.

5.2 BOILER CONTROLS - Fig. 12a, 12b or 12c

The domestic hot water thermostat **must** always be set to the maximum setting. A label has been supplied which **must** be positioned over the domestic hot water thermostat knob.

Alpha 240P and Alpha 280P

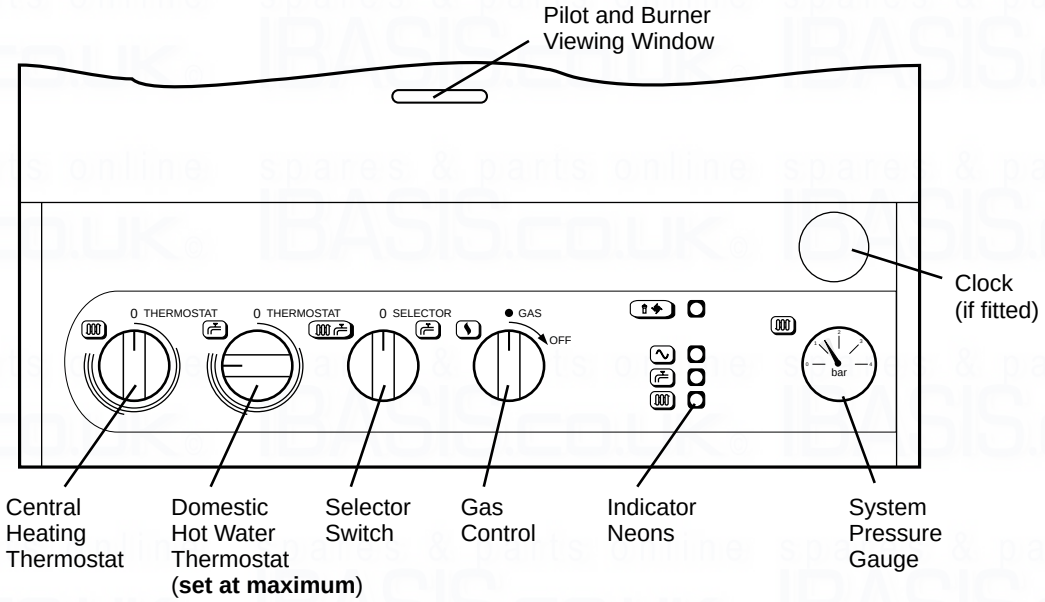

Fig. 12a

Alpha 240E and Alpha 280E

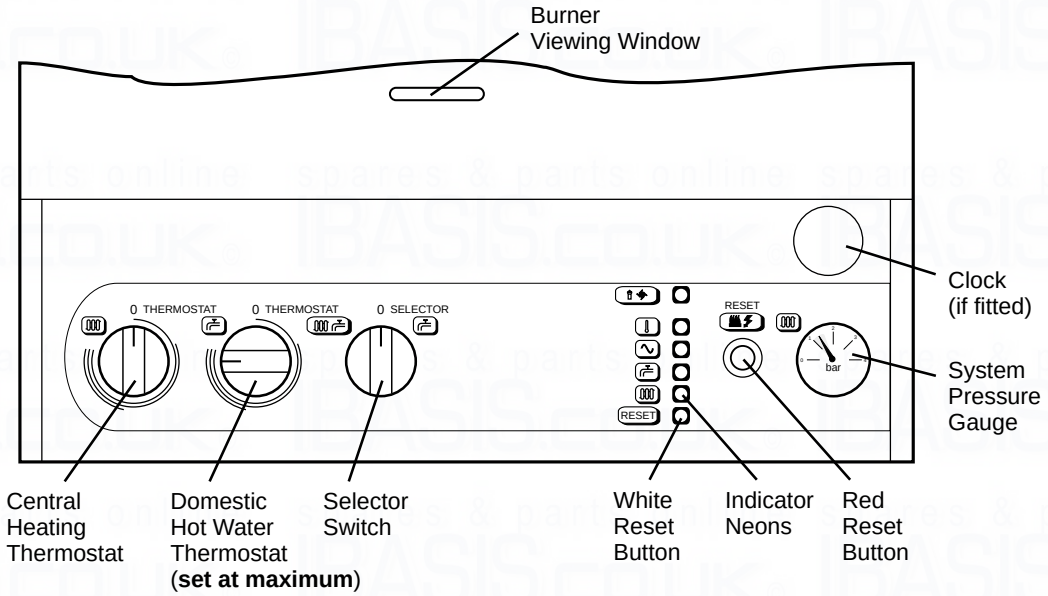

Fig. 12b

Alpha 240X

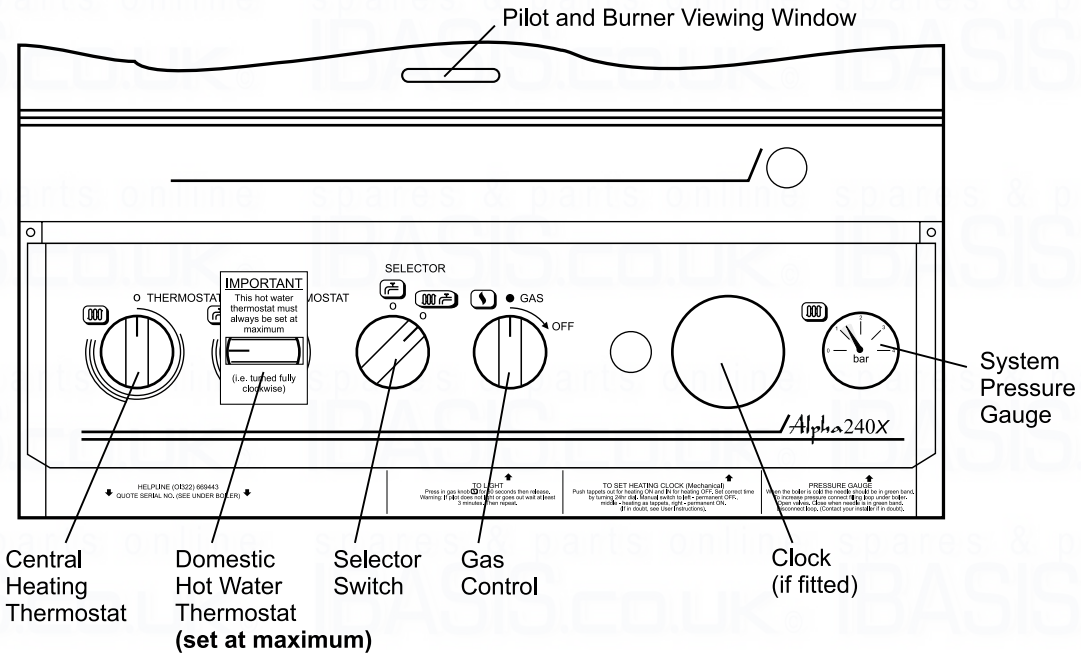

Fig. 12c

5.3 INITIAL LIGHTING

When the selector switch is set to (DHW and CH) the boiler will not operate in the central heating mode until the CombiMax store has reached a temperature of approximately 56°C. This will take between seven to twelve minutes from cold. Depending on whether it is a CombiMax 350 or 600.

5.4 CHECK THE BURNER PRESSURES

Hot water mode

The burner will stay at maximum output for approximately three minutes and then the burner pressure will decrease slowly to its minimum, until the hot water store reaches a temperature of approximately 56°C.

Check the burner pressure and that the burner goes out when the store is satisfied.

Central heating mode

The boiler will not operate in the central heating mode until the CombiMax store is satisfied.

5.5 FINAL COMMISSIONING

Thoroughly flush out the water pipework and water in the CombiMax store. Clean the filters within the pressure reducing valve and the mains water inlet valve.

5.6 FINAL ASSEMBLY

After completing the assembly of the boiler, place the CombiMax front casing in position and secure it at the bottom with two screws.

Note: Ensure the label has been fitted over the domestic hot water thermostat knob, and that it is set at maximum.

5.7 USER INFORMATION

The User must be advised (and demonstrated if necessary) of the following important points regarding the CombiMax:-

1. Explain the operation of the CombiMax.
2. The domestic hot water thermostat control knob on the boiler **must** be set and left at maximum.
3. If an immersion heater has been fitted, it must only be switched on if the boiler/CombiMax is not working.
4. Show the User the position of the pressure relief valve discharge pipes and tundish for the heating and DHW systems.
5. Hand the User's instructions to the User.
6. Leave these Installation and Servicing instructions with the User for use on future calls.

6 OPERATION

Refer to the instructions supplied with the boiler for full details of the operation of the boiler.

The CombiMax will supply hot water provided the selector switch on the boiler is set to either or .

Note: The clock (if fitted) only controls the operating times of the central heating, not domestic hot water - DHW is available continuously, unless an external DHW clock has been fitted to the CombiMax.

Domestic hot water supply always takes priority over central heating. If a demand for hot water is required during a central heating period, the boiler will automatically switch to the hot water mode until the demand is satisfied, i.e. storage water is to the required temperature. This interruption in the central heating is only when the demand for hot water is present and should not be noticed by the User.

When there is a demand for hot water (by opening a hot tap or temperature of the stored hot water is below the thermostat setting) the store pump starts and circulates mains water through the boiler operating the boiler DHW flow switch. The burner lights and the mains water is heated by the DHW heat exchanger. When the water in the store reaches a temperature of approximately 56°C the store thermostat switches the store pump off.

When a hot tap is opened, hot water is supplied from both the store and boiler. When the temperature within the store falls below the outlet thermostat setting, the hot water flow from the store is stopped and hot water is supplied (at a reduced rate) from the boiler only.

7 ROUTINE SERVICING

Note: It is the law that any service work must be carried out by a competent person.

The boiler must be serviced as described in the instructions supplied with the boiler, taking note of the following instructions regarding the servicing of the CombiMax.

Warning: Before servicing the CombiMax or boiler ensure the electrical and gas supplies have been isolated.

Gain access: Remove the bottom two screws securing the CombiMax front casing and lift the casing up slightly and remove.

1. Inspect and clean, if required, the filter and cartridge in the pressure reducing valve and cartridge in the expansion relief valve fitted to the store.
2. Check the charge in the domestic hot water expansion vessel and re-pressurise if necessary.
   Check the charge only when the pressure in the mains supply is zero.

8 COMPONENT REPLACEMENT

It is the law that any service work must be carried out by a competent person.

Warning: Before replacing any boiler components, isolate the electrical supply and close the boiler gas service cock.

After replacement of any components, check the operation of the CombiMax. Ensure that all the controls are returned to their original settings.

Refer to the instructions supplied with the boiler for full details on replacement of the boiler components.

8.1 ACCESS

1. To gain access to the CombiMax, remove the bottom two screws securing the CombiMax front casing and lift the casing up slightly and remove.
2. To gain access to the boiler, refer to the instructions supplied with the boiler.

8.2 DRAINING THE COMBIMAX - See CombiMax Schematic illustration

Isolate the electricity supply.

Remove the front casing as described in section 8.1. Close the mains water inlet valve. Open any hot tap below the level of the store and open the manual air vent on top of the store. Allow as much water to drain from the store as possible. To drain the remaining water from the store, remove the drain plug at the bottom of the store.

Note: Some water will remain in the components and care must be taken when removing them.

8.3 DHW PUMP - See CombiMax Schematic illustration

1. Drain the CombiMax as described in section 8.2.
2. Disconnect the pump unions and withdraw the pump. Remove the wiring cover and disconnect the wiring.
3. Connect the wiring to the new pump as follows:-

   Brown to L, Blue to N and Green/Yellow to ⏚
4. Ensure the pump is set to maximum (III) and re-assemble in reverse order, using new sealing washers.
5. Refill the store (refer to Commissioning, section 5.1).

8.4 DHW OUTLET THERMOSTAT - See CombiMax Schematic illustration

1. Gain access as described in section 8.1. Ensure the electricity supply is isolated.
2. Close the mains water inlet valve and open any hot tap below the level of the store.
3. Unscrew the thermostat retaining cap and withdraw the wax cartridge and spring (it may be necessary to release the cartridge with the aid of a screwdriver).
4. Fit the new thermostat and re-assemble in reverse order.
5. Refill the store (refer to Commissioning, section 5.1).

8.5 STORE THERMOSTAT - See CombiMax Schematic illustration

1. Gain access as described in section 8.1. Ensure the electricity supply is isolated.
2. Cut and remove the plastic cable tie around the plug and disconnect the plug from the thermostat.
3. Remove the two fixing screws and remove the thermostat from the mains water inlet pipe.
4. Fit the new thermostat and re-assemble in reverse order, fitting a new cable tie around the plug and pipework.

8.6 NON RETURN VALVE - See CombiMax Schematic illustration

1. Drain the CombiMax as described in section 8.2.
2. Undo the unions of the pipe containing the non return valve between the store and boiler.
3. Remove the non return valve
4. Re-assemble in reverse order with a new valve and seals.
5. Refill the store (refer to Commissioning, section 5.1).

8.7 DHW TEMPERATURE/PRESSURE RELIEF VALVE - See CombiMax Schematic illustration

1. Partially drain the hot water circuit as described in section 8.2, so that the water in the store is below the relief valve connection.
2. Remove the outlet thermostat as described in section 8.4.
3. Disconnect the valve pipework unions and remove the valve from the store.
4. Re-assemble in reverse order with a new valve.
5. Refill the store (refer to Commissioning, section 5.1).

8.8 DHW EXPANSION VESSEL - See Fig. 8

Note: If a top rear flue has been fitted to the boiler, it may be necessary to loosen the flue connections to the boiler so as to raise the height of the flue by approximately 10 mm to allow removal of the expansion vessel.

1. Close the mains water inlet valve and ensure that all hot water taps are closed. Release the pressure from the hot water circuit by opening and closing a hot tap which is lower than the store.
2. Disconnect the expansion vessel union and for the CombiMax 600 remove the two screws securing the vessel to the right side rear frame of the boiler.
3. Remove the expansion vessel.
4. Re-assemble in reverse order with a new vessel. Refill and pressurise the hot water circuit by opening the mains water inlet valve.

8.9 DHW EXPANSION RELIEF VALVE - See CombiMax Schematic illustration

1. Drain the CombiMax as described in section 8.2.
2. Disconnect the valve pipework unions and remove the valve.
3. Re-assemble in reverse order with a new valve.
4. Refill the store (refer to Commissioning, section 5.1).

8.10 PRESSURE REDUCING VALVE FILTER/CARTRIDGE - See CombiMax Schematic illustration

1. Close the mains water inlet valve and ensure that all hot water taps are closed. Release the pressure from the hot water circuit by opening and closing a hot tap which is lower than the store.
2. Unscrew the cartridge from the valve body.
3. Clean or replace the filter/cartridge and re-assemble in reverse order.
4 Refill and pressurise the hot water circuit by opening the mains water inlet valve.

8.11 PRESSURE REDUCING VALVE/CHECK VALVE - See CombiMax Schematic illustration

1. Drain the CombiMax as described in section 8.2.
2. Disconnect the unions of the pipe between the water mains inlet valve and pressure reducing valve, and remove the pipe from the manifold plate.
3. Remove the pressure reducing valve/check valve.
4. Re-assemble in reverse order with a new valve.
5. Refill the store (refer to Commissioning, section 5.1).

8.12 BOILER FLOW CONTROL REGULATOR - See Fig. 9

1. Drain the CombiMax as described in section 8.2.
2. Refer to Fig. 9 and disconnect the pipework containing the regulator.
3. Remove the regulator.
4. Re-assemble in reverse order with a new regulator.
5. Refill the store (refer to Commissioning, section 5.1).

8.13 DHW STORAGE CYLINDER - See CombiMax Schematic illustration

1. Drain the CombiMax as described in section 8.2.
2. Disconnect the DHW expansion vessel connection to the cylinder.
3. Remove the DHW outlet thermostat as described in section 8.4.
4. Remove the DHW temperature/pressure relief valve as described in section 8.6.
5. Remove the DHW expansion relief valve as described in section 8.8.
6. Remove the DHW pump as described in section 8.3.
7. Remove the pressure reducing valve as described in section 8.10.
8. Remove the store thermostat as described in section 8.5.
9. Disconnect all the pipework from the cylinder.
10. Cut and release the plastic security strap and lift the cylinder upwards to disengage it from the mounting frame. Pull the cylinder forward and remove it.
11. Re-assemble in reverse order with a new cylinder, using new seals and new plastic security strap supplied.
12. Refill the store (refer to Commissioning, section 5.1).

9 WIRING DIAGRAMS

9.1 COMBIMAX ILLUSTRATED WIRING DIAGRAM

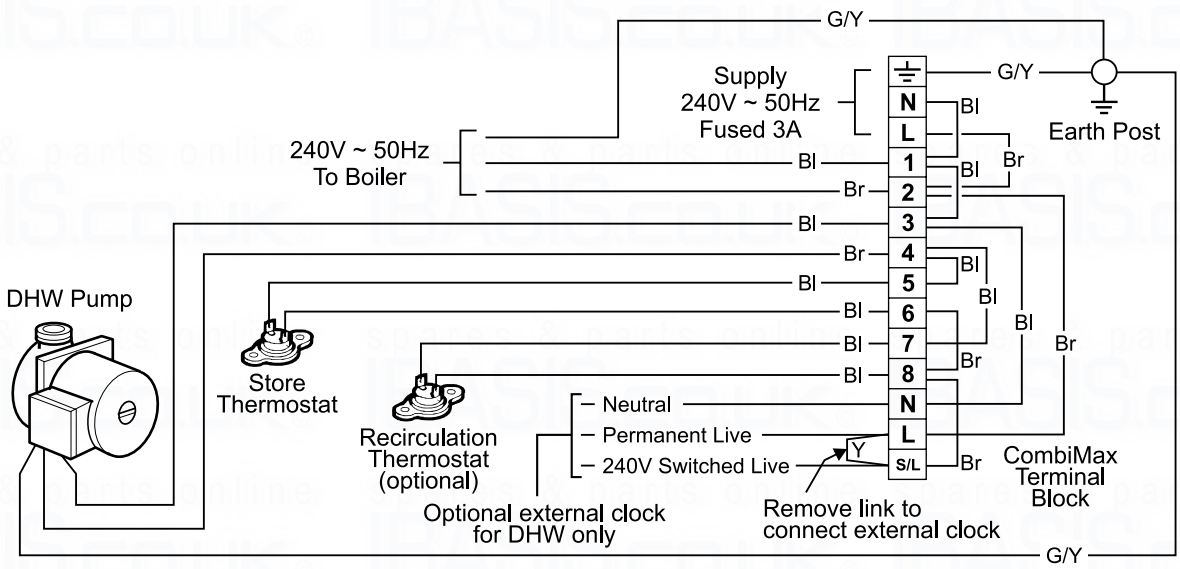

Br - Brown
Bl - Blue
G/Y - Green/Yellow
Y - Yellow

Notes:

1. All other external controls **must** be connected to the **boiler** terminal block.

2. Recirculation thermostat is only fitted when secondary circulation is fitted.

9.2 COMBIMAX FUNCTIONAL FLOW WIRING DIAGRAM

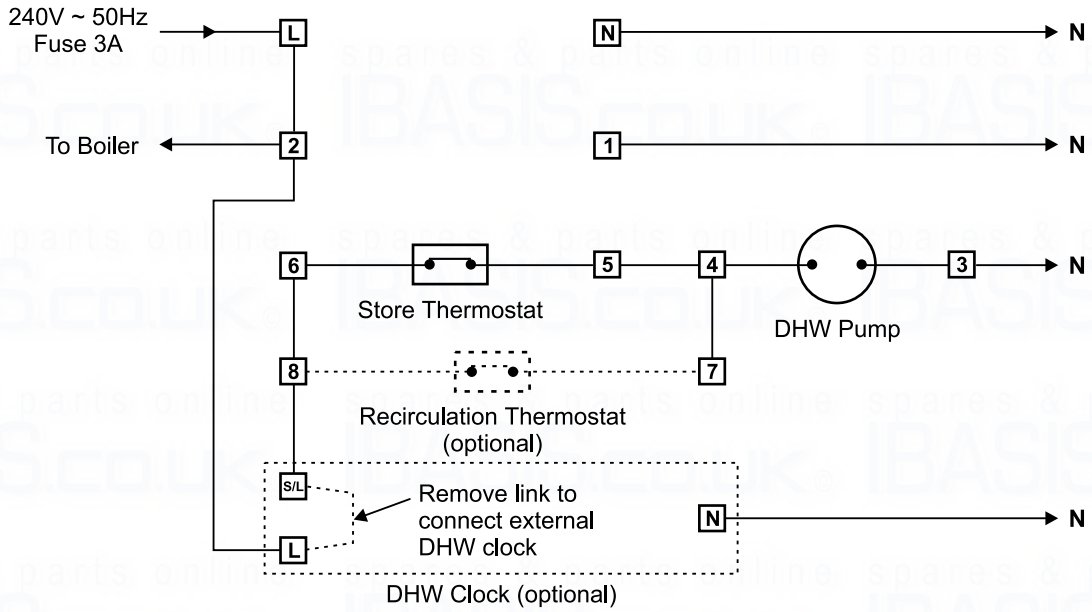

Note: ☐ CombiMax terminal block

10 SHORT PARTS LIST

Refer to section 2.5	Description	Model	Qty.	Alpha Part No.
Item 5	DHW pump - Grundfos UPS 15/60X18B	Both	1	0001047
Item 6	Pressure reducing valve - 2.5 bar	Both	1	0001041
Item 8	DHW expansion relief valve - 4 bar	Both	1	0001042
Item 9	Store thermostat - TOD	Both	1	0001049
Item 10	DHW expansion vessel - 4 litre	350	1	0001045
Item 10	DHW expansion vessel - 5 litre	600	1	0001098
Item 12	Temperature/pressure relief valve - 90°C/7 bar	Both	1	0001043
Item 13	DHW outlet thermostat - wax element	Both	1	0001039
Item 14	Storage cylinder - 35 litre	350	1	0001077
Item 14	Storage cylinder - 60 litre	600	1	0001107
Item 15	Boiler flow control regulator	Both	1	0001059
Item 16	Non return valve	Both	1	0001048
-	Tundish	Both	1	0001044

11 FAULT FINDING

12 APPENDIX 1

12.1 INTRODUCTION

The Alpha CombiMax has been designed to fit onto the left hand side of an Alpha 240/280 boiler. However, it is now possible (using a CombiMax 350 or 600 produced after February 1999, i.e. from Serial No. A906) to install it up to a distance of 1 metre from the boiler in the positions shown in Fig. 13.

The pipework between the boiler and CombiMax must be kept as short as possible and be no more than 1 metres in length, with the number of bends kept to a minimum.

Notes: **1.** A CombiMax produced before February 1999, i.e. before Serial No. A906 **must not** be fitted remote from the boiler.

2. A CombiMax fitted remote has no casing.

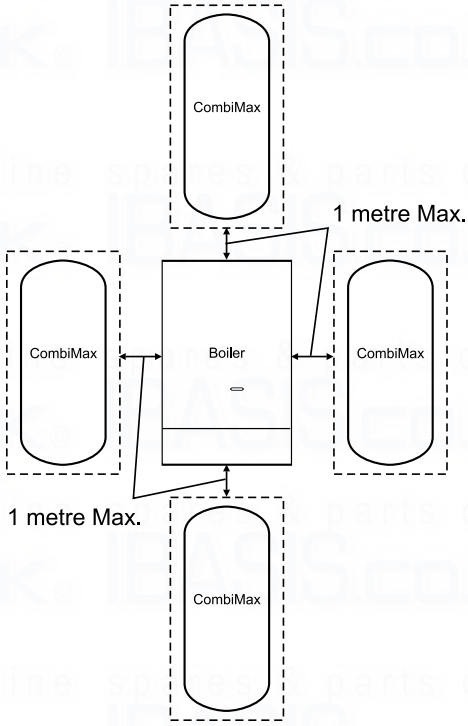

Possible locations for the CombiMax in relation to the boiler.

Fig. 13

12.2 COMBIMAX SCHEMATIC - remote location from boiler

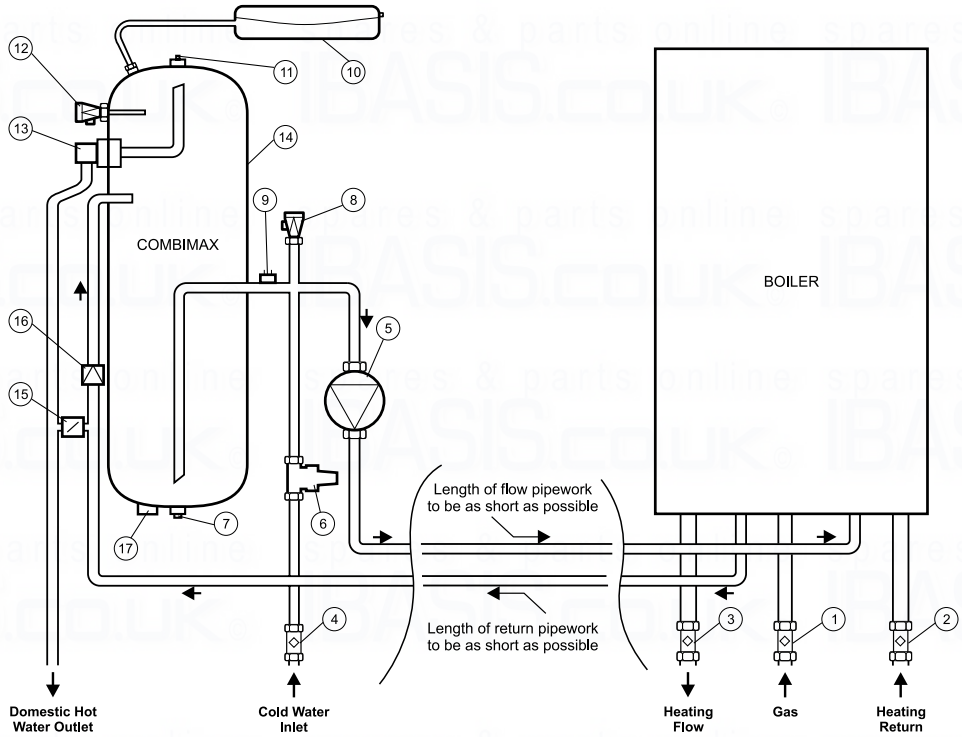

1. Gas service cock
2. On/Off valve and filter
3. On/Off valve
4. On/Off valve and filter
5. DHW pump
6. Pressure reducing valve with filter and check valve
7. Drain point
8. DHW expansion relief valve
9. Store thermostat
10. DHW expansion vessel
11. Manual air vent
12. DHW temperature/pressure relief valve
13. DHW outlet thermostat
14. Storage cylinder
15. Boiler flow control regulator
16. Non return valve
17. Immersion heater boss

Fig. 14

12.3 INSTALLATION

If the CombiMax is to be fitted in a remote location from the boiler, it should be installed as described in section 4, together with the following important points:-

12.4 MINIMUM CLEARANCES REQUIRED

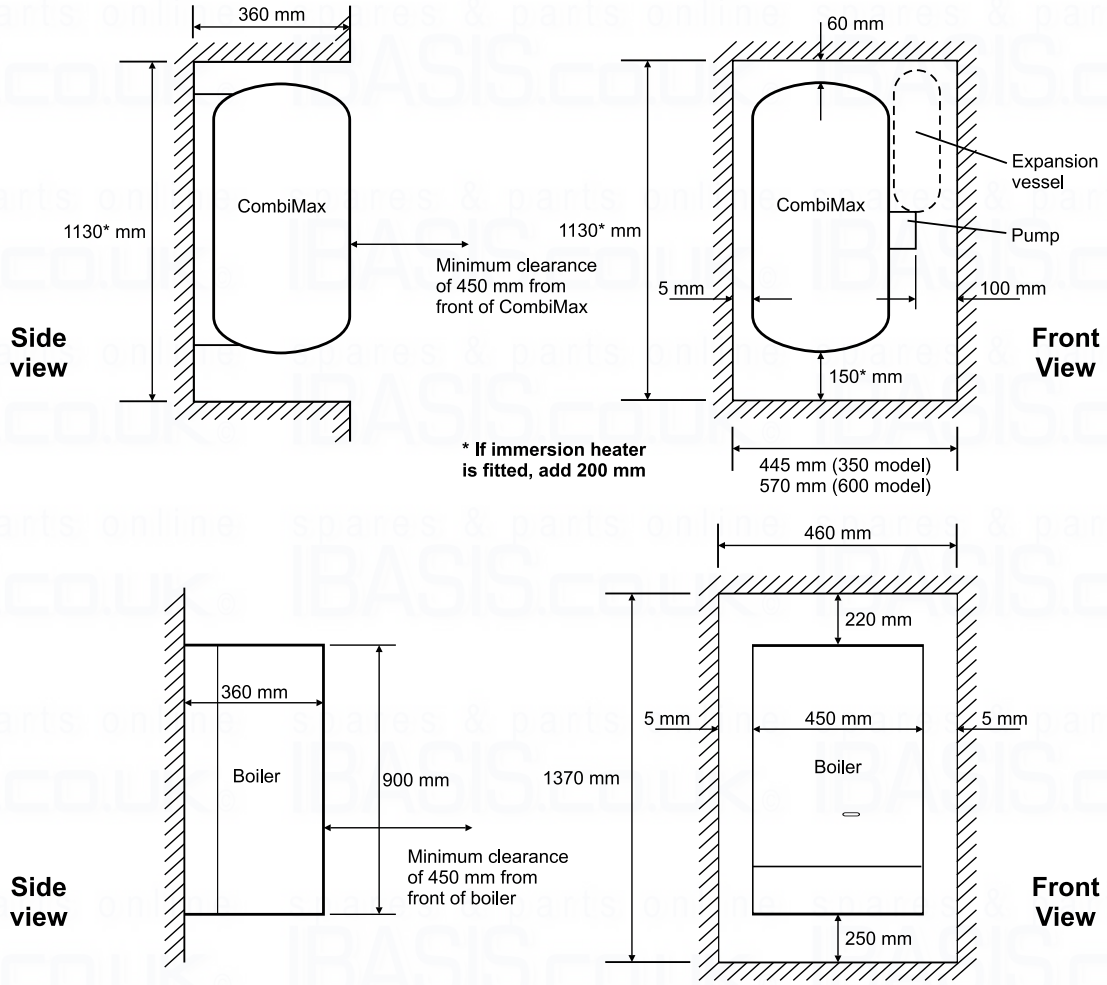

Fig. 15

12.5 WALL MOUNTING

The wall mounting frame and security strap supplied, are to be used to secure the CombiMax storage cylinder to the wall.

12.6 CASING

The casing components supplied with the CombiMax cannot be used when it is fitted in a remote location from the boiler.

12.7 DHW EXPANSION VESSEL

Fit the expansion vessel near the top of the storage cylinder using the flexible hose supplied. See Fig. 15.

12.8 FILLING LOOP

With the CombiMax in a remote location from the boiler, the filling loop facility supplied with the boiler cannot be used as designed. The filling loop should be discarded and its connections on the cold mains inlet valve (CombiMax) and heating return valve (boiler) sealed, using ½" BSP threaded caps (not applicable to Alpha 240X). See Fig. 16.

12.9 CONNECTING PIPEWORK

The boiler and CombiMax must be connected together as shown in Fig. 16, using 15 mm pipework. The pipework supplied with the CombiMax can be utilised to provide the connections at the boiler and CombiMax.

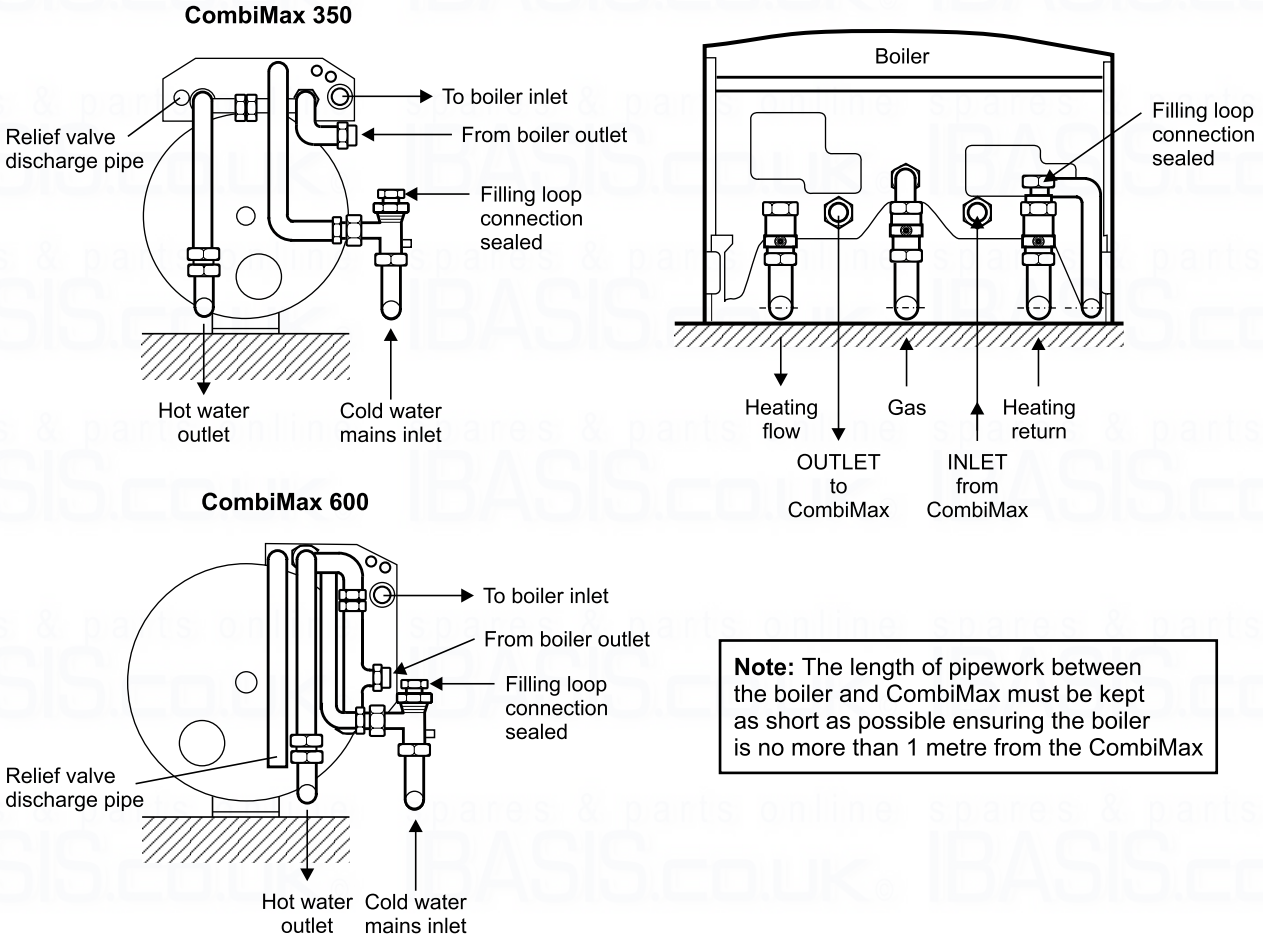

Note: The length of pipework between the boiler and CombiMax must be kept as short as possible ensuring the boiler is no more than 1 metre from the CombiMax

Fig. 16

12.10 ELECTRICAL SUPPLY

Connect the electrical supply cable directly to the CombiMax terminal block as described in section 4.7, **ensuring** the cable is secured with the clamping bush supplied.

The cable supplied fitted for connection to the boiler will be too short and therefore **must** be removed from the CombiMax terminal block terminals 1, 2 and ⏚. A longer length cable to the same specification stated in section 3.1 must then be used to connect the electrical supply to the boiler terminal block from the CombiMax.

Note: Connect this electrical supply to the boiler as described in the boiler instructions.

Alpha BOILERS

Alpha Therm Limited.
Nepicar House, London Road, Wrotham Heath
Sevenoaks, Kent TN15 7RS

email: info@alphatherm.co.uk
website: www.alpha-boilers.com

These instructions have been carefully prepared but we reserve the right to alter the specification at any time in the interest of product improvement.
© Alpha Therm Limited 1999.

Part No. 0001056/4

Manual compiled and designed by Publications 2000, Tel (01670) 356211

11/99/D112