Installation and Servicing Instructions

Alpha CD25C/28C/35C

Range of Wall Mounted, Fan Assisted, Room Sealed, Gas Fired, High Efficiency Condensing Combination Boilers

For Technical help or for Service call ...
ALPHA HELPLINE Tel: 0844 8718764
website:www.alpha-innovation.co.uk

Alpha
HEATING INNOVATION

Nepicar House, London Road,
Wrotham Heath, Sevenoaks,
Kent TN15 7RS

British Gas
Service Listed

CE 0051

Alpha CD25C	G.C. No. 47 532 31
Alpha CD28C	G.C. No. 47 532 33
Alpha CD35C	G.C. No. 47 532 35

WRAS APPROVED PRODUCT

benchmark COLLECTIVE MARK
THE MARK OF QUALITY FOR THE INSTALLATION, COMMISSIONING AND SERVICING OF DOMESTIC HEATING AND HOT WATER SYSTEMS

For use with Natural Gas only

Leave these instructions with the User

CONTENTS

1 Introduction 2
2 Technical data 3
3 General boiler information 7
4 Installation 14
5 Commissioning 22
6 Boiler operation 25
7 Routine servicing 26
8 Component replacement 29
9 Wiring diagrams 35
10 Fault finding 37
11 Short parts list 41
12 Benchmark Checklist 42
13 Service record 43

1 INTRODUCTION

The Alpha CD range of high efficiency condensing boilers are wall mounted, fan assisted room-sealed combination boilers. The burner is lit electronically and the heat output is controlled by a modulating fan and gas valve.

The CD25C, CD28C and CD35C are combination boilers providing both central heating and domestic hot water at mains pressure.

The boilers are supplied with a pump, pressure relief valve, expansion vessel and pressure gauge fully assembled and tested. They are designed for use with a fully pumped, sealed and pressurised central heating system using only Natural gas.

The CD25C boiler is suitable for central heating loads of between 5.5 and 19.5 kW (18 780 and 66 550 Btu/h).

The CD28C boiler is suitable for central heating loads of between 6.3 and 25.9 kw (21 500 and 88 400 Btu/h).

The CD35C boiler is suitable for central heating loads of between 7.8 and 30.3 kw (26 600 and 103 400 Btu/h).

The maximum output available for domestic hot water is 24.3 kW (84 800 Btu/h), capable of providing 9.6 litres/min for the Alpha CD25C boiler, 28.7 kW (97 900 Btu/h), providing 11.4 litres/min for the Alpha CD28C boiler and 34.6 kW (118 100 Btu/h), providing 14.2 litres/min for the Alpha CD35C boiler, all with a temperature rise of 35°C.

IMPORTANT

It is the law that all gas appliances are installed by a competent person, ie Gas Safe registered personnel, in accordance with the following recommendations:-

Current Gas Safety (Installation and Use) Regulations

All current Building Regulations issued by the Department of the Environment, i.e. Approved Document L1.

Building Standards (Scotland) (Consolidation) Regulations issued by the Scottish Development Department

UK Water Regulations/Byelaws (Scotland)

Health & Safety Document No. 635 (The Electricity At Work Regulations 1989)

The installation should also be in accordance with the following British Standard Codes of Practice:-

BS 5440 Part 1	Flues
BS 5449	Forced circulation hot water systems
BS 5546	Installation of hot water supplies for domestic purposes
BS 6700	Design, installation, testing and maintenance of services supplying water
BS 6798	Installation of gas fired hot water boilers
BS 6891	Gas installation
BS 7593	Code of Practice for treatment of water in heating systems
BS 7671	Requirements for electrical installations, IEE Wiring Regulations

Reference should be made to DEFRA document 'Guide to condensing boiler installation assessment procedures for dwellings'.

If installation is in a timber framed building, refer to the Institute of Gas Engineers document IGE/UP/7.

This appliance meets the requirements of IPX4D, ie degree of protection against moisture.

This appliance contains no asbestos and no substances have been used in the construction process that contravene the COSHH Regulations (Control of Substances Hazardous to Health).

Failure to install this appliance correctly could lead to prosecution. It is in your own interest and that of safety to ensure that the law is complied with.

Manufacturer's instructions must **NOT** be taken in anyway as over-riding statutory obligations.

Notes:
1. Ensure that the Benchmark Checklist has been completed after the boiler has been installed and commissioned.
2. It is the law that all boiler installations are registered by the installer through the Gas Safe Gas Work Notification Scheme.
3. The boiler must only be used with Alpha CD condensing flue components.

2 TECHNICAL DATA

2.1 PERFORMANCE - NATURAL GAS *(CAT: I2H 2H - G20 - 20 mbar)*

Alpha CD25C

Central Heating			MAX.	MIN.
Heat Input (H_s)		kW	20.4	6.4
(Gross)		Btu/h	69 600	21 960
Heat Input (H_i)		kW	18.4	5.8
(Net)		Btu/h	62 780	19 780
Heat Output (H_s condensing)		kW	19.5	6.1
(50°C/30°C)		Btu/h	66 550	20 820
Heat Output (H_i non-condensing)		kW	18.0	5.5
(80°C/60°C)		Btu/h	61 420	18 780
Differential Burner	Room sealed chamber panel fitted	mbar	4.06	0.40
Pressure		in wg	1.62	0.16
Gas Rate		m³/h	1.94	0.61
		ft³/h	68.5	21.5

Alpha CD25C

Domestic Hot Water			MAX.	MIN.
Heat Input (H_s)		kW	26.7	6.4
(Gross)		Btu/h	91 100	21 960
Heat Input (H_i)		kW	24.1	5.8
(Net)		Btu/h	82 200	19 780
Output to Water (H_s)		kW	24.3	5.5
(modulating)		Btu/h	84 800	18 780
Differential Burner	Room sealed chamber panel fitted	mbar	5.20	0.40
Pressure		in wg	2.08	0.16
Gas Rate		m³/h	2.55	0.61
		ft³/h	90.0	21.5
Flow Rate at 35°C Rise		L/min	9.6	
		gal/min	2.2	
Specific Flow Rate (D) at 30°C Rise		L/min	11.2	
(Flow rate @ 30K to EN625)		gal/min	2.5	

Alpha CD28C

Central Heating			MAX.	MIN.
Heat Input (H_s)		kW	27.1	7.3
(Gross)		Btu/h	92 400	24 900
Heat Input (H_i)		kW	24.4	6.6
(Net)		Btu/h	83 250	21 500
Heat Output (H_s condensing)		kW	25.9	6.9
(50°C/30°C)		Btu/h	88 400	23 500
Heat Output (H_i non-condensing)		kW	24.0	6.3
(80°C/60°C)		Btu/h	81 900	21 500
Differential Burner	Room sealed chamber panel fitted	mbar	5.70	0.52
Pressure		in wg	2.28	0.21
Gas Rate		m³/h	2.59	0.70
		ft³/h	91.4	24.7

Alpha CD28C

Domestic Hot Water			MAX.	MIN.
Heat Input (H_s)		kW	31.6	7.3
(Gross)		Btu/h	107 900	24 900
Heat Input (H_i)		kW	28.5	6.6
(Net)		Btu/h	97 200	22 500
Output to Water (H_s)		kW	28.7	6.3
(modulating)		Btu/h	97 900	21 500
Differential Burner	Room sealed chamber panel fitted	mbar	7.55	0.52
Pressure		in wg	3.02	0.21
Gas Rate		m³/h	3.02	0.70
		ft³/h	106.6	24.7
Flow Rate at 35°C Rise		L/min	11.4	
		gal/min	2.5	
Specific Flow Rate (D) at 30°C Rise		L/min	13.3	
(Flow rate @ 30K to EN625)		gal/min	2.9	

Alpha CD35C

Central Heating			MAX.	MIN.
Heat Input (H_s)		kW	31.6	8.9
(Gross)		Btu/h	107 800	30 600
Heat Input (H_i)		kW	28.5	8.1
(Net)		Btu/h	97 200	27 600
Heat Output (H_s condensing)		kW	30.3	8.5
(50°C/30°C)		Btu/h	103 400	29 000
Heat Output (H_i non-condensing)		kW	28.0	7.8
(80°C/60°C)		Btu/h	95 550	26 600
Differential Burner	Room sealed chamber panel fitted	mbar	2.01	0.15
Pressure		in wg	0.80	0.06
Gas Rate		m³/h	3.02	0.86
		ft³/h	106.6	30.4

Note: The above appliances are fully modulating and are **not** range rated.

Alpha CD35C

Domestic Hot Water			MAX.	MIN.
Heat Input (H_s)		kW	38.0	8.9
(Gross)		Btu/h	129 600	30 600
Heat Input (H_i)		kW	34.3	8.1
(Net)		Btu/h	117 000	27 600
Output to Water (H_s)		kW	34.6	8.0
(modulating)		Btu/h	118 100	27 300
Differential Burner	Room sealed chamber panel fitted	mbar	2.50	0.15
Pressure		in wg	1.00	0.06
Gas Rate		m³/h	3.64	0.86
		ft³/h	128.5	30.4
Flow Rate at 35°C Rise		L/min	14.2	
		gal/min	3.13	
Specific Flow Rate (D) at 30°C Rise		L/min	16.6	
(Flow rate @ 30K to EN625)		gal/min	3.44	

2.2 SYSTEM

Central Heating (Sealed System)	
Max. Working System Pressure	2.5 bar
Min. System Pressure	0.5 bar
Max. System temperature	82°C
Pressure Relief Valve Setting	3 bar (44 PSI)
Expansion Vessel Size (pre-charge press.)	8 L at 0.8 bar
Flow Connection	22 mm
Return Connection	22 mm
Relief Valve Connection	15 mm
Recommended System Pressure (cold)	1.0 bar
CH Water Temp. (Approx. max.)	82°C (180°F)

Domestic Hot Water		
Max. Mains Inlet Water Pressure		8 bar
Min. Mains Water Pressure		0.2 bar
Min. DHW Flow Rate		2.5 l/min
Mains Inlet Connection		15 mm
DHW Outlet Connection		15 mm
DHW Water Content	CD25C	0.2 L
	CD28C	0.26 L
	CD35C	0.32 L
Outlet Water Temp. (Approx. max.)		62°C (144°F)

2.3 COMPONENTS

Burner		Stainless steel
Main Heat exchanger		Stainless steel
DHW Heat Exchanger		Stainless Steel
Main Burner Injector	CD25C	5.2 mm
	CD28C	5.4 mm
	CD35C	8.5 mm
Flue - Outer Duct		White
Flue - Inner Duct		Plastic

2.4 ELECTRICAL

Supply	230/240 V ~ 50 Hz
External Fuse	3 A
Power Consumption	130 W
Internal Fuse	F2 A
Electrode Spark Gap	3 - 4 mm
Electrical Enclosure Degree of Moisture Protection	IPX4D

2.5 INSTALLATION

Min. Clearances for Servicing (from casing)	Top	235 mm
	Bottom	250 mm
	Sides	5 mm
	Front	450 mm
Flue Terminal Size		100 mm Dia.
Flue Terminal Protruding		90 mm
Hole Size Required For Flue Assy.		110 mm Dia.
Lift Weight	CD25C	41 kg
	CD28C	42 kg
	CD35C	43 kg

2.6 GENERAL

Case Dimensions	Height	720 mm
	Width	440 mm
	Depth	300 mm
	Depth (with Jig)	345 mm
Gas Connection		22 mm
Primary Water Content	CD25C	2.5 L
	CD28C	2.8 L
	CD35C	3.2 L
Air Duct Diameter		100 mm
Flue Duct Diameter		60 mm

2.7 PERFORMANCE DATA

Boiler model	$\%CO_2$ content (± 0.2%)			Sedbuk rating		NOx class
	Natural Gas			Efficiency band	SAP efficiency (%)	
	Min	CH Max	DHW max			
CD25C	9.0	9.4	9.4	A	90.2	5
CD28C	9.1	9.3	9.3	A	90.3	5
CD35C	9.0	9.3	9.3	A	90.5	5

Note: The differential burner pressure and the combustion performance value of $\%CO_2$ content have been factory pre-set and do not require adjusting.

2.8 FLUE LENGTHS

CD Easy-Flue 500 mm with terminal and 90° bend. A CD Easy-Flue 1000 mm with terminal and 90° bend is also available.
CD 750 mm and 1000 mm flue extensions are available.
Length of Flue Required:-

Rear Flue = wall thickness + 160 mm (includes terminal). This is without back frame, add 45 mm if the wall jig is used.
Side Flue = wall thickness + distance between wall and side of boiler + 245 mm (includes terminal)
Vertical Flue = distance from top of boiler side panel to required roof position minus 1 m for vertical terminal assembly

Maximum horizontal flue length = 12 m.
Maximum vertical flue length including terminal is 15 m.
Each additional CD 90° Bend is equivalent to 1.3 m of flue length.
Each CD 45° Bend is equivalent to 0.9 m of flue length.
The CD Vertical Flue terminal assembly is equivalent to 1 m of flue length.

2.9 AVAILABLE PUMP HEAD FOR CENTRAL HEATING

Output (50/30°C)		Available pump head		Flow rate	
kW	Btu/h	20°C		20°C	
		metres	feet	litre/min	gal/min
25.40	86 700	2.3	7.6	16.6	3.7
18.70	64 000	3.5	11.6	12.6	2.8
15.60	53 000	3.8	12.6	10.5	2.3
12.35	42 200	4.0	13.2	8.3	1.8
5.30	18 100	4.6	15.2	3.2	0.7

This information is based on 20°C system design temperature difference.
Note: For outputs upto 28 kW refer to Section 3.7.

2.10 ELECTRICAL CONNECTIONS

Note: This Appliance Must Be Earthed
An optional integral single channel Clock kit is available if required.
Note: Only use the Alpha single channel clock. **Do not fit any two channel clocks.**

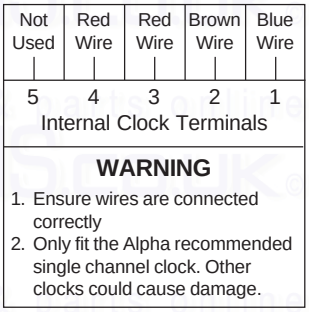

Clock connections

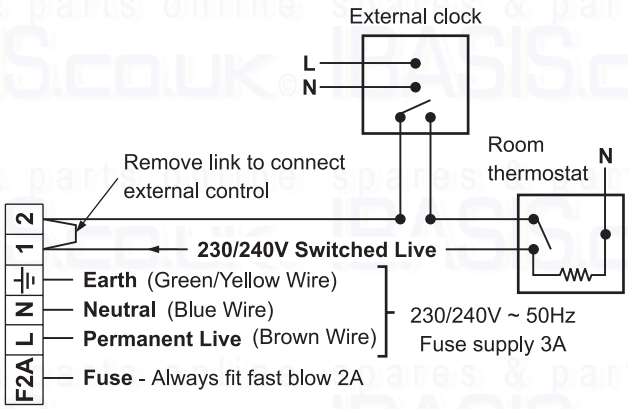

Boiler terminal block

Fig. 1

2.11 BOILER SCHEMATIC

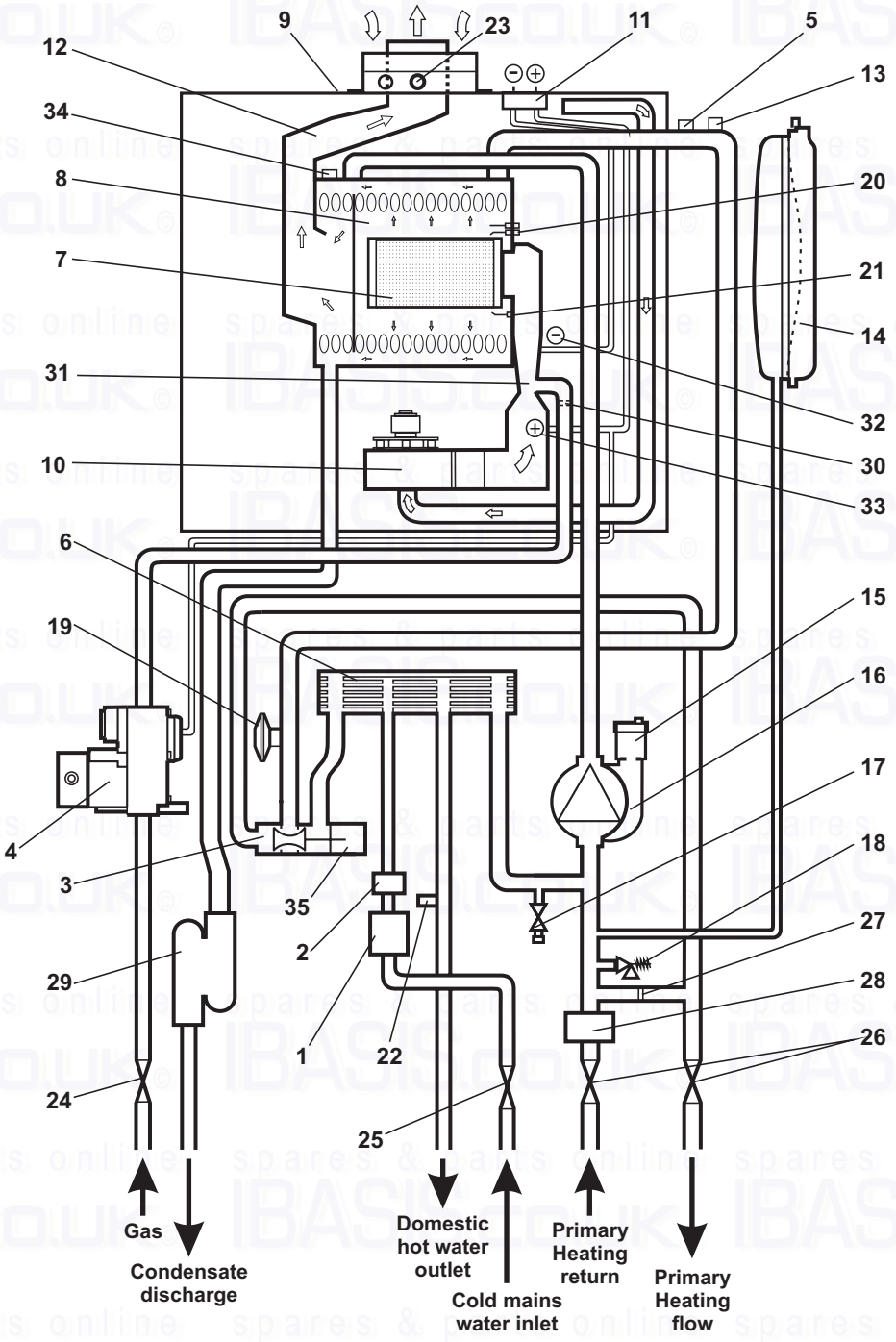

1 - Seasonality valve
2 - DHW flow switch and filter
3 - Diverter valve
4 - Gas valve
5 - Primary temperature sensor
6 - DHW heat exchanger
7 - Main burner
8 - Primary/condensing heat exchanger
9 - Room sealed chamber
10 - Fan
11 - Pressure differential test points
12 - Flue hood
13 - Overheat thermostat
14 - Expansion vessel
15 - Automatic air vent
16 - Pump
17 - Drain point
18 - Pressure relief valve
19 - Primary pressure switch
20 - Ignition electrodes
21 - Flame sensing electrode
22 - DHW temperature sensor
23 - Flue sampling point
24 - Gas service cock
25 - Mains inlet on/off valve
26 - On/off valve (2 off)
27 - Automatic by-pass
28 - Cyclone separator (if applicable)
29 - Condensate trap
30 - Injector
31 - Venturi
32 - Venturi negative point
33 - Venturi positive point
34 - Flue thermostat
35 - Diverter valve motor

Fig. 2

3 GENERAL BOILER INFORMATION

3.1 GAS SUPPLY

The Alpha CD25C boiler requires a gas rate of 2.55 m³/h (90.1 ft³/h).

The Alpha CD28C boiler requires a gas rate of 3.02 m³/h (106.7 ft³/h).

The Alpha CD35C boiler requires a gas rate of 3.64 m³/h (128.5 ft³/h).

The meter and supply pipes must be capable of delivering this quantity of gas in addition to the demand from any other appliances in the house. The boiler requires at least a 22 mm gas supply pipe.

The complete installation, including the meter, must be tested for gas tightness and purged as described in BS 6891.

3.2 ELECTRICAL SUPPLY

The boiler requires a 230/240 V ~ 50 Hz mains supply, fused at 3 A

The boiler must be earthed.

There must only be one common isolator, providing complete electrical isolation, for the boiler and any external controls.

This boiler has been fitted with a supply cable, however, if it is necessary to fit a cable use PVC insulated cable not less than 0.75 mm² (24 x 0.2 mm) to BS 6500 Table 16. The boiler should be connected to a fused three pin plug and unswitched shuttered socket outlet (both complying with BS 1363), or a fused double pole switch with a contact separation of at least 3 mm in both poles.

Wiring external to the boiler must be in accordance with the current IEE Wiring Regulations (BS 7671).

Note: If a room thermostat is fitted, it must be suitable for 230/240 V switching.

3.3 AIR SUPPLY

The boiler does not require any air vents for cooling in the room in which it is installed or when installed in a cupboard or compartment. The minimum clearances for servicing must always be maintained.

Note: A cupboard or compartment used to enclose the boiler must be designed and constructed specifically for the purpose, i.e. comply with the Building Regulations.

3.4 FLUE SYSTEM - Fig. 3

The flue system must be installed in accordance with BS 5440:1.

For horizontal flues ensure that the Easy-Flue outer duct is installed horizontally (please note that the Easy-Flue inner duct already has a pre-determined slope towards the boiler for condensate to run back towards the boiler).

When additional flue extensions are used, ensure the flue slopes down towards the boiler by a minimum of 25 - 30 mm per metre of flue.

It is recommended that horizontal and vertical flue assemblies should be supported approximately every 1.5 m with access provided to the joints.

Flue components are available as follows:-

CD Easy-Flue 500 mm (includes 90° bend and terminal) - Part No. 6.2000510 (this inludes plume management facility).
CD Easy-Flue 1000 mm (includes 90° bend and terminal) - Part No. 6.2001010 (this inludes plume management facility).
CD 750 mm flue extension - Part No. 6.2000750.
CD 1000 mm flue extension - Part No. 6.2001050.
CD 100 mm flue support brackets (pack of 5) - Part No. 6.1000355.
CD 90° bend - Part No. 6.2000590.
CD 45° bend - Part No. 6.2000545.
CD Vertical flue terminal assembly. Refer to the separate installation instructions supplied with the assembly.

The following methods determine the correct length of flue required.

For rear exit flue (including terminal) L = B + 160 mm (205 mm if wall jig is used)

For side exit flue (including terminal) L = B + C + 245 mm (min. side clearance required is 5 mm)

For vertical flue L = H minus 1000 mm for vertical terminal assembly

Where L = Required flue length
B = Finished wall thickness
C = Distance from the inside wall to the side of the boiler
H = Distance from top of boiler side panel to roof position

Note:
1. If an extra 90° bend is used, this reduces the maximum flue length by 1.3 m. Each 45° bend used reduces the maximum flue length by 0.9 m.
2. Under no circumstances must the flue length (including allowances for extra bends) exceed 12 metres horizontally and only 15 metres vertically.
3. Failure to use Alpha CD flue components with the boiler will invalidate the boilers CE approval, guarantee and may be unsafe.
4. Further plume management flue accessories are available - refer to the Easy-Flue installation instructions.

HORIZONTAL FLUE OPTIONS - Lmax = 12 metres

(245 mm length includes terminal)

L = B + C + 245 mm

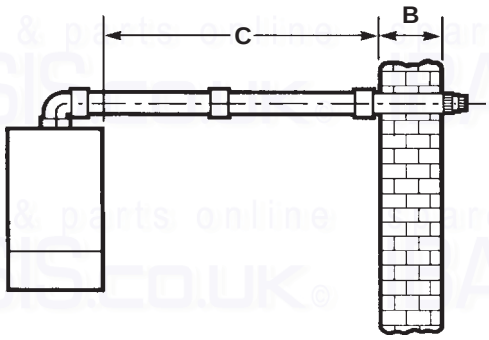

L = B + C + E + 245 mm

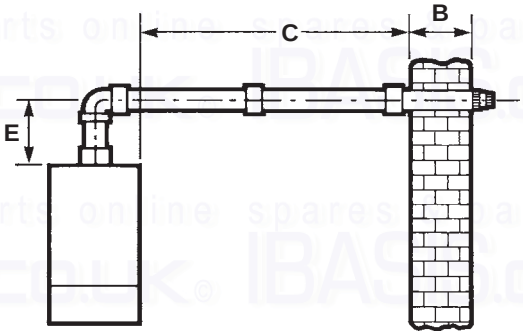

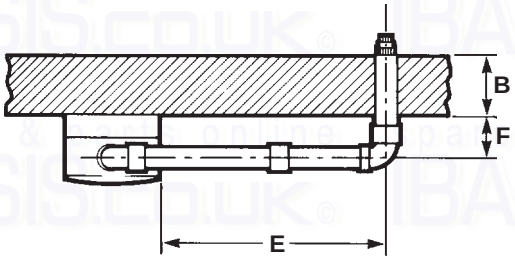

L = B + E + F + 245 mm + (90° bend = 1.3 metre)
(add 45 mm to 'F' if a jig is used)

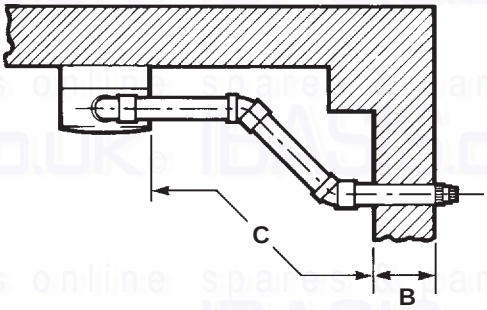

L = B + C + 245 mm + (2 x 45° bends = 1.8 metre)

VERTICAL FLUE OPTIONS

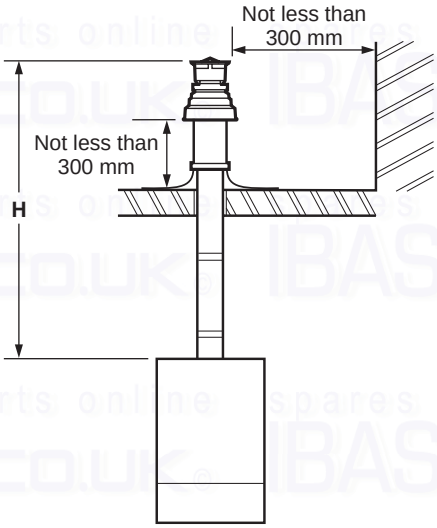

Hmax = 15 m

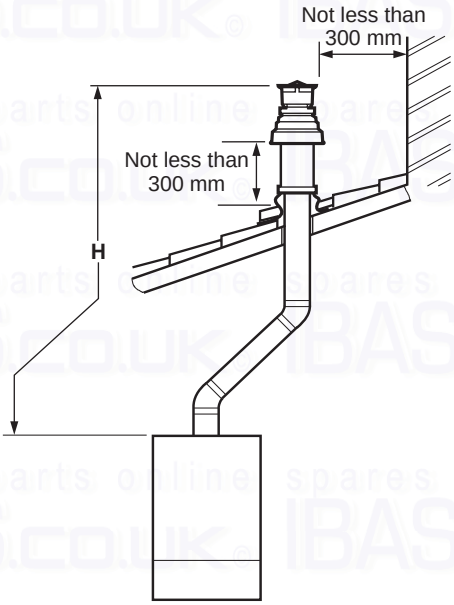

Hmax = 13.2 m

Fig. 3

3.5 FLUE TERMINAL LOCATION - Figs. 4 and 5

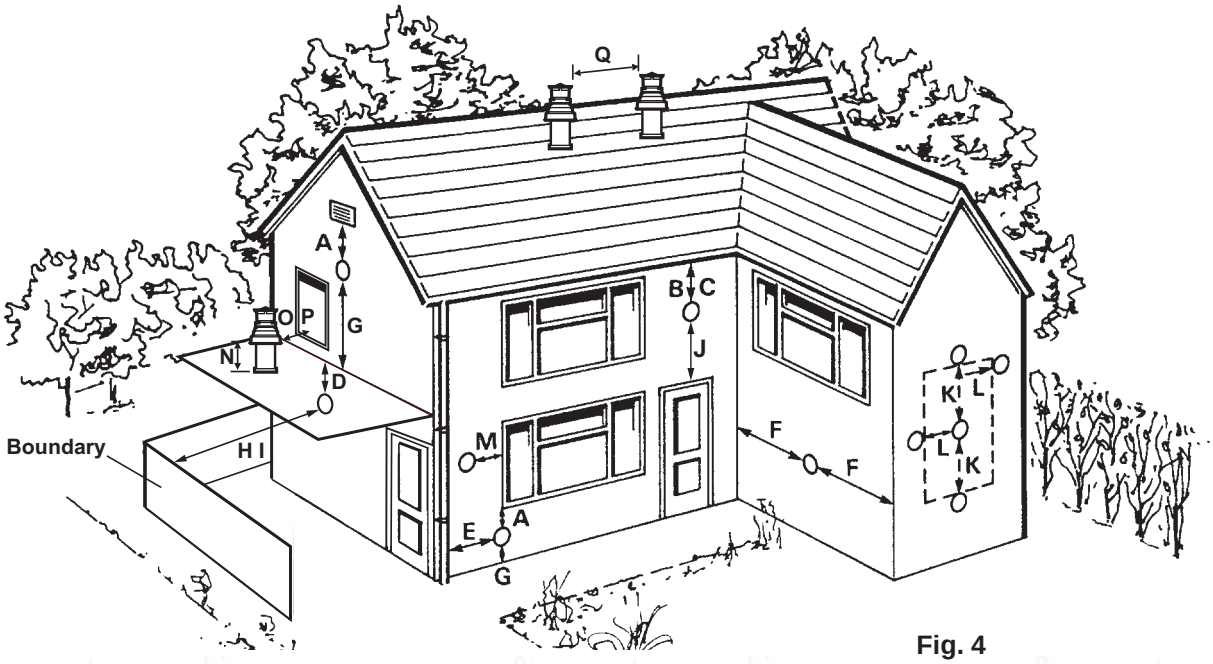

Fig. 4

	Terminal position	Min. distance (mm)
A	Directly below an opening, air brick, windows, etc.	300 (See Note 1)
B	Below gutters, soil pipes or drain pipes	75 (See Note 3)
C	Below eaves	200 (See Note 3)
D	Below balconies	200 (See Note 3)
E	From a vertical drain pipe or soil pipe	150 (See Note 3)
F	From an internal or external corner	300 (See Note 2)
G	Above ground, roof or balcony level	300
H	From a surface or boundary facing the terminal	600 (See Note 4)
I	From a terminal facing the terminal	1200 mm
J	Above an opening, air brick, window etc.	300 (See Note 1)
K	Vertically from a terminal on the same wall	1500 mm
L	Horizontally from a terminal on the same wall	300 mm
M	Horizontally from an opening, air brick, window etc.	300 mm (See Note 1)
N	Minimum protrusion through a roof	300 mm
O	From a vertical obstruction	300 mm
P	From an openable window	600 mm
Q	From an adjacent vertical terminal	600 mm

Notes:

1. In addition, the terminal should not be nearer than 150 mm to the framework of an opening into the buiding, i.e. a window surround or door surround.
2. This clearance may be reduced to 25 mm without effecting the performance of the boiler. However, to ensure the condensate plume does not affect adjacent surfaces a clearance of 300 mm is preferable.
3. These clearances may be reduced to 25 mm without effecting the performance of the boiler. However, to ensure the condensate plume does not affect adjacent surfaces the terminal can be extended beyond gutters, pipes, eaves, balconies etc. by upto 500 mm. If the flue is extended more than 500 mm outside, it should be boxed and insulated.
4. To reduce the possibility of nuisance to neighbouring buildings etc. it is recommended the terminal shouild not be less than 2500 mm from car parking spaces, building boundary walls, fences etc.
5. A terminal must not be sited under a car port roof.
6. In certain weather conditions the terminal will emit a plume of steam. If possible avoid positioning the terminal where this may cause a nuisance, i.e. positions A, D, G, H, J or M.
7. The flue terminal must be exposed to the external air and the position must allow the free passage of air across it at all times.
8. A terminal must not be sited below 2 m where people have access to, such as public footpaths, access routes, patios etc. However, If the terminal is fitted less than 2 m above a surface where there is no public access, the terminal must be protected by a terminal guard. A suitable guard is available from Alpha Therm Ltd.

Proximity of flue duct outlets to boundaries

The flue duct shall be sited so that it is at least 600 mm (see Fig. 5) from the boundary line when facing it and at least 300 mm from the boundary line when running parallel to it.

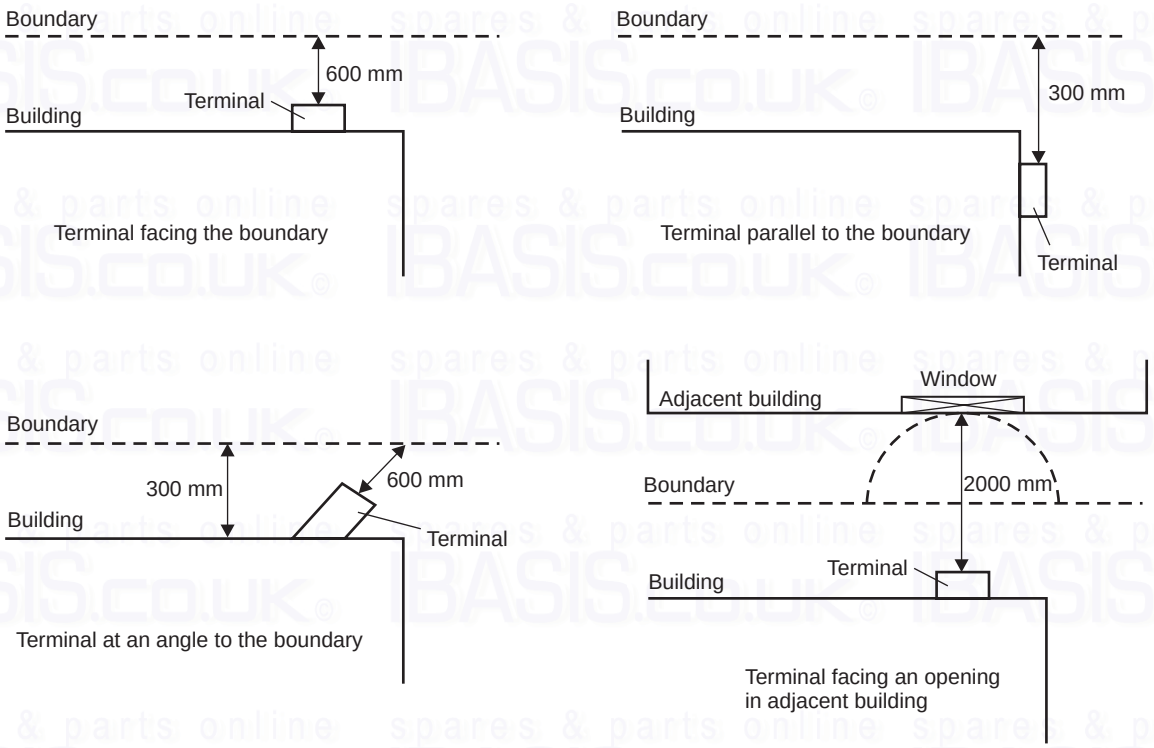

Fig. 5

3.6 BOILER LOCATION

The boiler is not suitable for external installation unless it is installed within a purpose designed weatherproof building.

The boiler must be installed on a flat vertical wall which is capable of supporting the weight of the boiler. The boiler can be fitted to or adjacent to a wall comprising of a combustible material without the need for a special thermal insulation barrier.

If the boiler is to be fitted in a timber framed building, it should be fitted in accordance with the Institute of Gas Engineers 'Guide for Gas Installations in Timber Frame Housing', reference IGE/UP/7.

The boiler may be installed in any room or internal space, although particular attention is drawn to the requirements of the current IEE Wiring (BS7671) Regulations, and in Scotland, the electrical provisions of the Building Regulations applicable in Scotland, with respect to the installation of the boiler in a room or internal space containing a bath or shower. Where a room-sealed boiler is installed in a room containing a bath or shower, it must not be possible for a person using the bath or shower to touch any electrical switch or boiler control utilising mains electricity.

The boiler may be installed in a cupboard or compartment, provided it is correctly designed for that purpose, i.e. complies with the Building Regulations and the requirements of BS 6798.

3.7 CENTRAL HEATING SYSTEM - Fig. 6

The boiler is designed for use in a sealed central heating system in accordance with the requirements of BS 5449 and BS 6798. The system should be designed to operate with flow temperatures of up to 82°C. When designing the system, the pump head, expansion vessel size, mean radiator temperature, etc. must all be taken into account. Refer to the pump performance table for guidelines.

System volume - The expansion vessel incorporated into the boiler is suitable for a sealed heating system with a maximum water content of 80 litres (18 gal). Above 80 litres, consideration should be given to fitting an additional expansion vessel fitted in the position shown in Fig. 6. To check correct operation of the expansion vessel(s) the system pressure should not be more than 2.5 bar when the system is at maximum operating temperature (for further guidance refer to BS 7074:1).

The boiler is supplied with the following components built in:-

Pressure relief valve - complying with BS 6759 and set to operate at 3 bar. The discharge pipe must be routed clear of the boiler and terminated in such a manner that it can be seen, but cannot cause injury to persons or property.

Pressure gauge - To indicate the system pressure to be maintained.

Expansion vessel - Conforming to BS 4814 with a capacity of 8 litres and pre-charged to a pressure of 0.8 bar.

By-pass - The boiler incorporates an automatic by-pass, therefore an automatic by-pass is not required for the system.

Cyclone - This is a device fitted in the heating return within the optional Premier Pack wall jig to remove any foreign or solid matter etc. from the system.

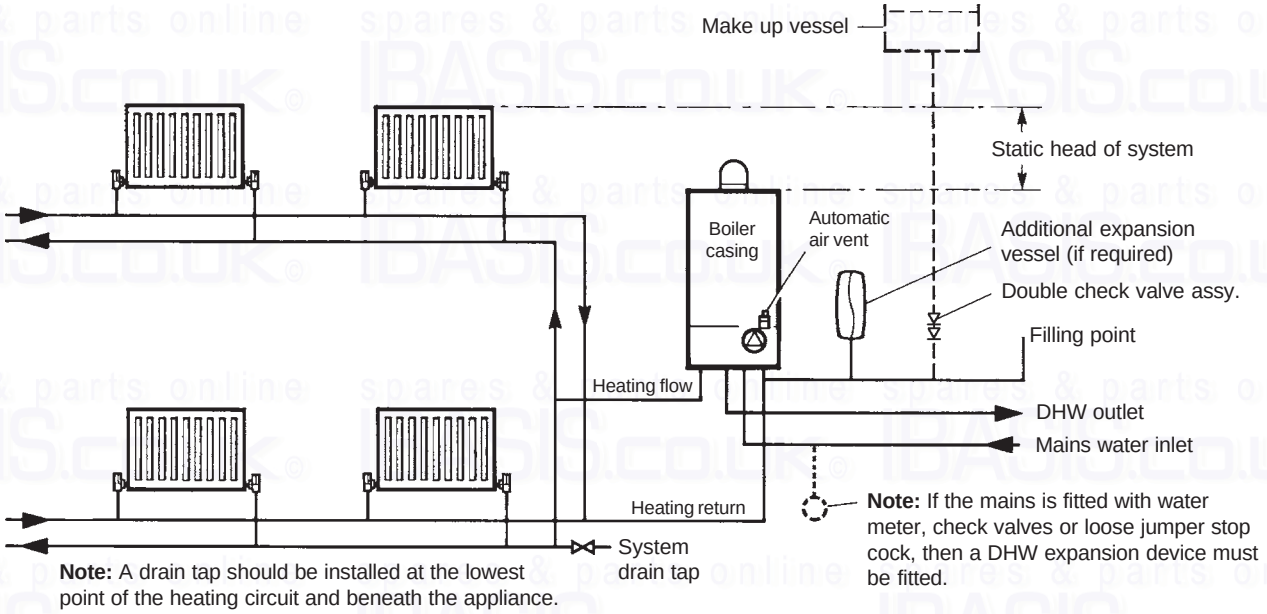

Fig. 6

3.8 FILLING THE CENTRAL HEATING SYSTEM - Figs. 7, 8

The system design pressure (cold) should be set to 1.0 bar. This pressure is equivalent to a static head (see Fig. 6) of 10.2 metres of water.

Provision should be made to replace water lost from the system. This can be by manual or automatic means, as shown in Figs. 7 and 8. The position for connecting an automatic make-up vessel is indicated in Fig. 6. A double check valve assembly must be used, as shown in Fig. 8.

Filling of the system must be carried out in a manner approved by the local Water Undertaking. Where allowed, the system may be filled via a temporary connection as shown in Fig. 7. After filling, always disconnect the flexible hose of the filling loop.

All fittings used in the system must be able to withstand pressures up to 3 bar.

Drain taps (to BS 2879) must be used to allow the system to be completely drained.

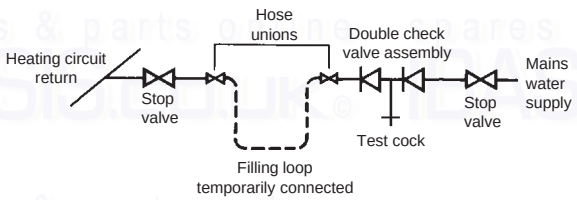

Fig. 7

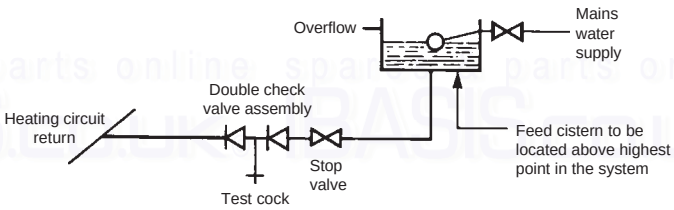

Fig. 8

3.9 FLUSHING THE HEATING SYSTEM

It is essential that the central heating system is thoroughly cleaned and flushed when fitting an Alpha CD boiler. Failure to do so will invalidate the warranty.

The primary condensing heat exchanger is constructed in stainless steel and therefore is compatible with most materials used in a heating system.

If a cleaning agent and inhibitor are used, they must be applied in accordance with their manufacturers instructions. Only products from Fernox and Sentinel are acceptable for use with the Alpha CD boilers. Further information can be obtained from Fernox Technical Support (Tel: 0870 8700362) or Sentinel (Tel: 0800 3894670).

If the Cyclone is fitted in the heating return on the boiler wall jig, the heating system should still be thoroughly flushed as detailed below. The Cyclone collection point should be emptied via the drain point (see Fig. 14b) after flushing has been completed.

The system should be flushed in accordance with BS 7593 and BS 5449. The following procedures are recommended:

1. Installing onto a new system:-
   a. Fill the system, vent at high points, at pump and radiators.
   b. Check for leaks.
   c. Rapidly drain the system.
   d. Chemically clean the system as instructed by the recommended cleaner manufacturer.
      Note: Ensure that the system is flushed to remove any remains of the cleaner.
   e. If chemical cleaner is not used to clean the system:-
      i) Refill the system.
      ii) Switch on the boiler and allow the system to heat up to the normal operating temperature.
      iii) Rapidly drain the system while the water is still hot.
      iv) Refill the system.
   f. As required, add the recommended inhibitor to the system as instructed by the inhibitor manufacturer.
   g. Recheck for leaks.
2. Installing onto an existing system, clean the system before fitting the new boiler:-
   a. If the old boiler is still working:-
      i) Switch on the boiler and allow the system to heat up to the normal operating temperature.
      ii) Rapidly drain the system while the water is still hot.
      iii) Refill and chemically clean the system as instructed by the recommended cleaner manufacturer.
      iv) Ensure the system is flushed to remove any remains of the cleaner.
      v) Fit the new boiler.
   b. If the old boiler is not working:-
      i) Rapidly drain the system.
      ii) Remove the old boiler.
      iii) Flush the system through.
      iv) Fit the new boiler.
      v) Refill and chemically clean the system as instructed by the recommended cleaner manufacturer.
      vi) Ensure the system is flushed to remove any remains of the cleaner.
   c. As required, add the recommended inhibitor to the system as instructed by the inhibitor manufacturer.
   d. Check for leaks.

3.10 DISPOSAL OF CONDENSATE

Provision must be made for the safe disposal of condensate produced by the flue gases of the Alpha CD boilers and reference should be made to BS 6798 for the requirements on the disposal of condensate.

The boilers incorporate a condensate trap which has a seal of 75 mm, therefore no additional trap is required.

The condensate should ideally be discharged internally into an internal waste pipe (washing machine/sink waste) or soil pipe to avoid the possible risk of freezing. The pipework must be a minimum of 22 mm plastic pipe.

External pipe runs should be avoided, but if it is necessary, the 22 mm pipework should be protected from the risk of freezing with a waterproof insulation and the length should be kept to a maximum of 3 m for all exposed pipework. Alternatively the condensate pipework could be increased to a minimum 32 mm diameter without the requirement to insulate the pipework. In all cases suitable protection should be provided against all weather conditions.

Termination should be into an external gully or soak away as shown in Figs. 9 and 10.

Note: All pipework must have a continuous fall (see Figs. 9 and 10) from the boiler and must be of an acid resistant material such as plastic waste pipe. (copper or steel is not suitable).

It should be noted that the connection of a condensate pipe to a drain may be subject to local building control requirements.

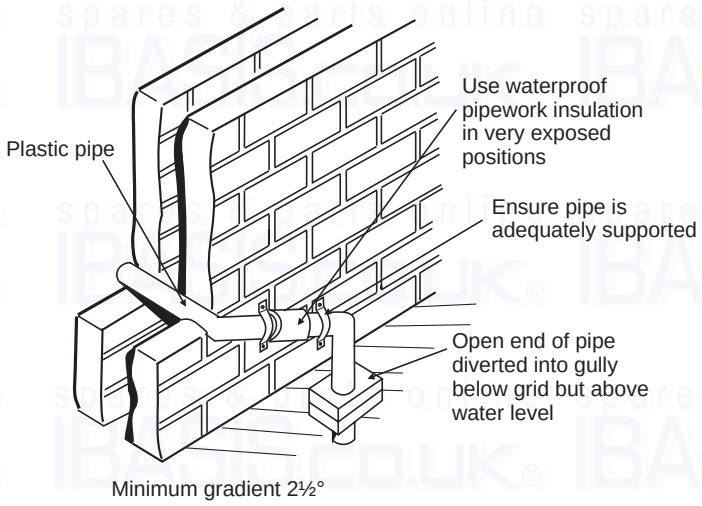

Fig. 9 - External gully

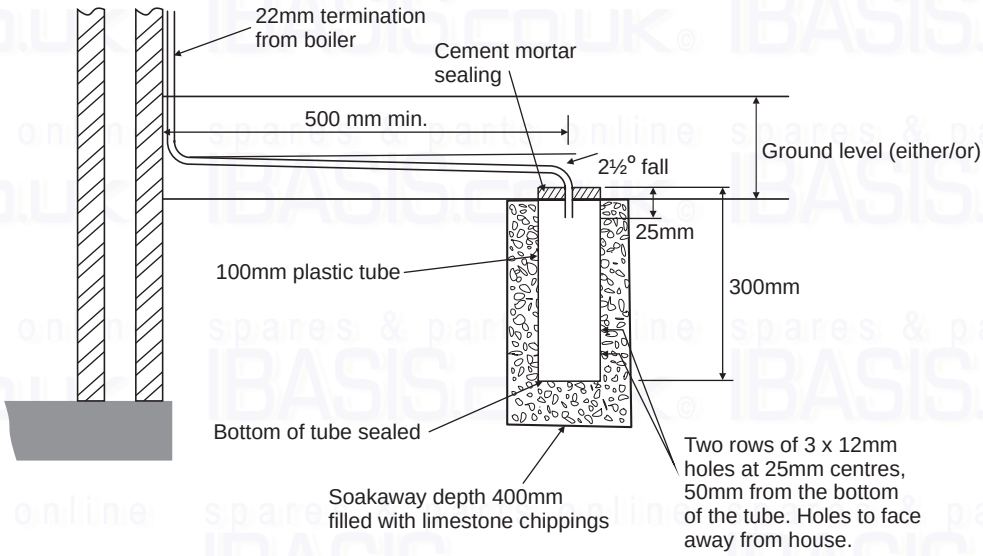

Fig. 10 - External soakaway

3.11 DOMESTIC HOT WATER SYSTEM

The minimum flow rate needed for the flow switch and burner to operate is 2.5 litres/min.

The incoming mains water pressure should be between 0.2 and 8 bar to ensure efficient operation. If the pressure is above 7 bar a pressure reducing valve must be fitted.

Following Part L Building Regulations, where the mains water hardness exceeds 200 parts per million, provision should be made to treat the feed water to the hot water circuit of combination boilers to reduce the rate of accumulation of limescale.

To ensure economic use, the pipe runs between the boiler and taps should be in 15 mm copper pipe and be as short as possible. Where possible the pipework should be insulated to reduce heat loss.

All taps and mixing valves used with the hot water system must be suitable for operating at a mains pressure of up to 8 bar.

Showers - A shower may be used with the boiler if required.
If a loose or flexible head type shower is used it may require the fitting of a double check valve, to comply with Water Bye Law 17.

Bidets - No anti-syphonage arrangements are necessary, provided the outlets are shrouded and it is not possible to attach a temporary hand held spray. A supply of direct mains fed hot and cold water is permitted provided the appliance is of the over-rim flushing type.

Before the mains water supply pipe is connected to the boiler, it should be thoroughly flushed out to avoid the danger of dirt or foreign matter entering the boiler.

Seasonality valve - This valve maintains the hot water temperature (factory set) for both summer and winter conditions by automatically changing the flow rate through the boiler. However, if adjustment of the setting is required refer to Section 5.6.2.

4 INSTALLATION

4.1 UNPACKING

1. The boxes required when the boiler is installed with a horizontal flue are as follows:-

   Box 1 ..... Cased boiler fitted with water and gas valves, filling loop, seasonality valve, union bends and washers
   Mounting bracket plus screws and wall plugs
   Condensate discharge pipe
   Literature pack and Wall template

   Box 2 ..... CD Easy-Flue 500 mm or CD Easy-Flue 1000 mm. Both include 90° bend and horizontal flue terminal
   Note: NOT required for vertical flue

   Notes: a. All flues must be suitable for CD condensing boilers.

   b. CD 750 mm and 1000 mm flue extensions are available, if required.

   Box 3 (if applicable) ..... Premier Pack includes: wall mounting jig with template, cyclone, bottom tray,earth bonding plate, spacers, pressure relief pipe terminal, split flow and return union bends, screw pack and fitting instructions.

2. Unpack boiler and remove the loose items packs and mounting bracket.

   Note: The boiler can be stood in an upright position, (to allow this, the union bends have been turned upwards so that they do not protrude beneath the bottom - check this before standing the boiler upright).

4.2 CLEARANCES REQUIRED - Fig. 11

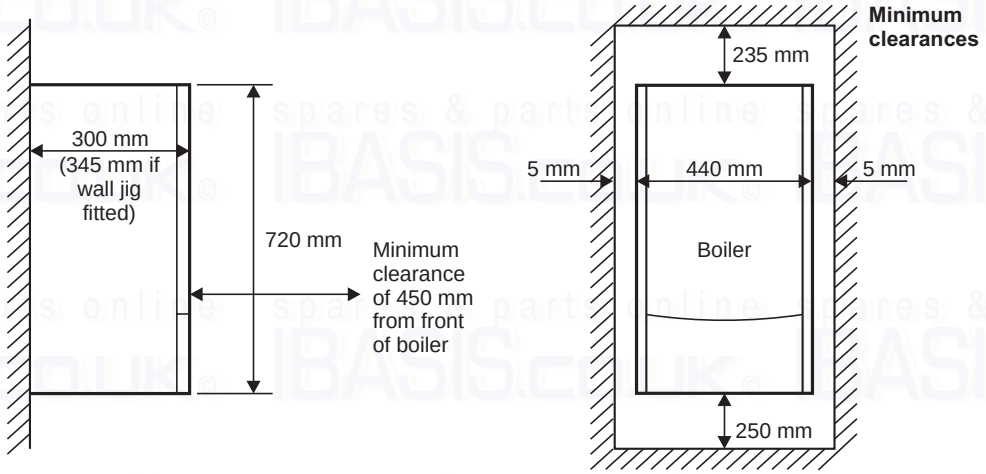

Fig. 11

4.3 PREPARE THE WALL - Fig. 12

If the optional wall jig is used refer to the instructions supplied with the kit.

1. Decide upon the position of the boiler taking into account the clearances required for servicing and the flue terminal position.
2. Tape the template to the wall (ensure it is level and the right way up) and mark the position of the holes for the boiler mounting bracket or, if applicable the wall jig fixings. If rear exit flue is used, mark the position of the hole for the flue.

   The wall jig is supplied with a pressure relief valve discharge pipe for use when the boiler is mounted on an external wall where the outside is inaccessible, if you wish to use this pipe - mark it's position.
3. **Side exit flue -** Continue the horizontal centre line of the flue across the wall to the side wall, then along the side wall 140 mm, 185 mm if the wall jig is used (ensure the lines are horizontal). This will give the position of the centre of the hole for the flue.

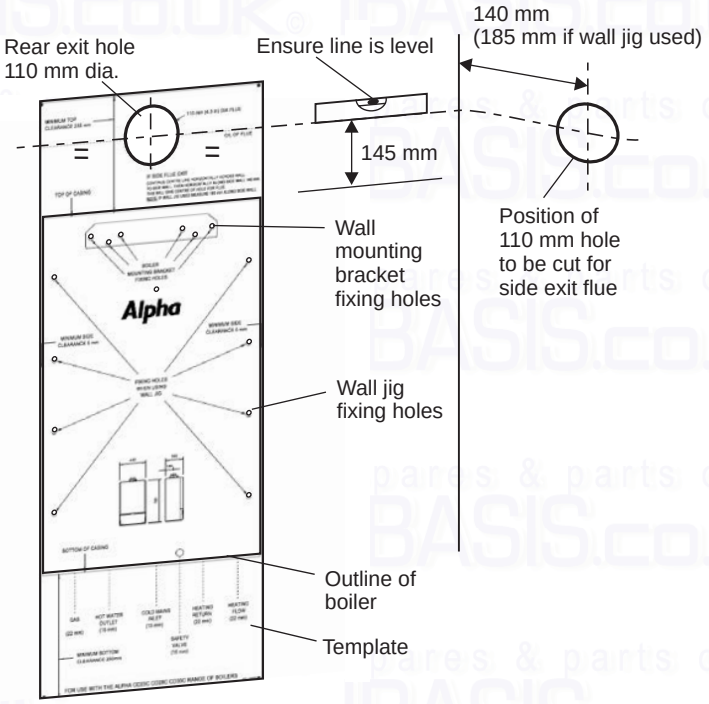

Fig. 12

4. Cut the 110 mm diameter hole (or use a 107 mm core drill) in the wall for the flue.
   Notes: **1.** Ensure the hole is horizontal.
   2. **For internal fitting** of the flue, using the flue sealing collar supplied, cut a 130 mm dia. flue hole using a 127 mm core drill.
5. Drill the fixing holes (10 mm dia.) to accept the No.10 plugs supplied. Using the screws supplied, fit the mounting bracket or wall jig if used. If applicable drill a 22 mm dia. hole for the pressure relief valve discharge pipe terminal supplied with the jig.

IMPORTANT: If the wall jig is used, follow the instructions supplied with the Premier Pack to fit the jig, mount the boiler and connect the pipework.

4.4 FIT THE BOILER - Refer to Fig. 12, 13

Lift the boiler and locate it on the mounting bracket.

Note: When handling or lifting always use safe techniques - keep your back straight, bend your knees, don't twist - move your feet, avoid bending forwards and sideways and keep the load as close to your body as possible.
Where possible transport the boiler using a sack truck or other suitable trolley.
Always grip the boiler firmly, and before lifting feel where the weight is concentrated to establish the centre of gravity, repositioning yourself as necessary.

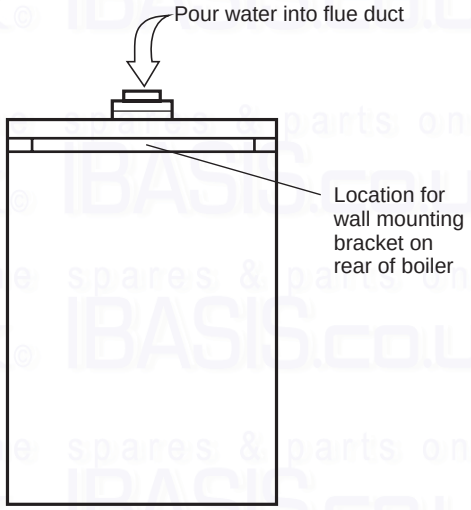

Fig. 13 - rear of boiler

4.5 CONNECT THE PIPEWORK - Fig. 14

1. Thoroughly flush out all the water pipework. Refer to Section 3.9.
2. The valves/fittings have been factory fitted, however, check that all the connections underneath the boiler have been tightened, especially the union bends.
   Note: If applicable the heating union bends supplied with the wall jig have been designed to enable the heating pipes to be routed from above and/ or below using the same fitting.
   Note: When soldering to the boiler union bends, ensure the bends are not connected to the valves, otherwise the internal seals may be damaged.
3. Connect the system pipework to the boiler. One metre of copper pipe must be fitted to the boiler before connecting to any plastic pipework.
   Note: Do not forget that the pressure relief valve discharge pipe must be routed clear of the boiler to a drain in such a manner that it may be seen, but cannot cause injury to persons or property.
4. Connect the 22 mm condensate trap drain pipe to the condensate discharge pipe using the clip supplied.
   Ensure that the condensate discharge pipe is as required in Section 3.10.
   Pour at least 0.5 litre of water into the flue duct, as shown in Fig. 13, and check the condensate discharge pipe for soundness.
5. Ensure that all the valves are closed (spindle flats at right angles to valve) and do not turn on the water or gas supplies at this stage.

Note: Disconnect the filling loop after filling the central heating system.

A - Heating flow (22 mm)
B - Hot water outlet (15 mm)
C - Gas inlet (22 mm)
D - Cold water mains inlet (15 mm)
E - Heating return (22 mm)
F - Pressure relief valve (15 mm)
G - Heating drain point
H - Cold water inlet filter
I - Condensate discharge pipe

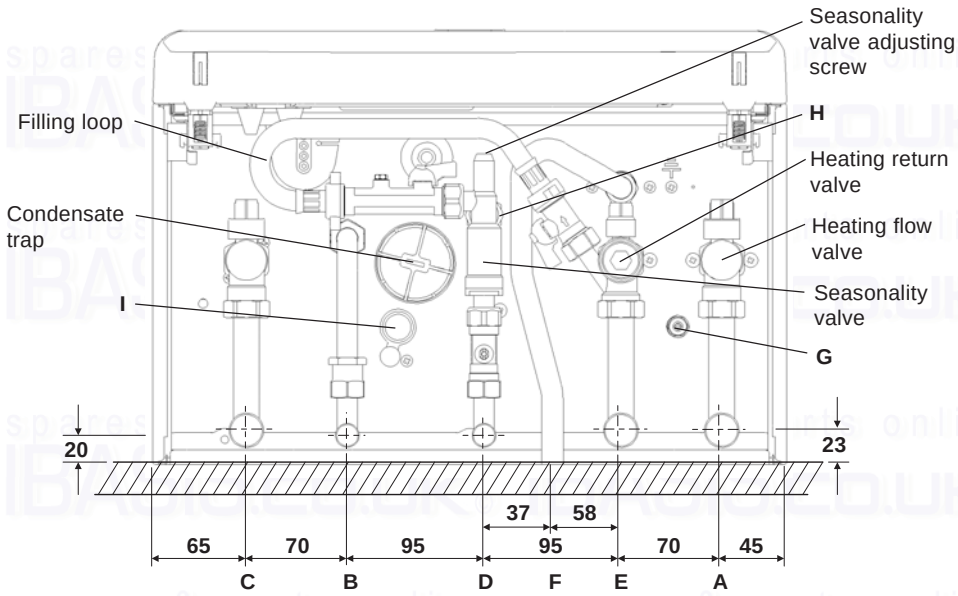

Fig. 14a - Without wall jig

Note: Disconnect the filling loop after filling the central heating system.

A - Heating flow (22 mm)
B - Hot water outlet (15 mm)
C - Gas inlet (22 mm)
D - Cold water mains inlet (15 mm)
E - Heating return (22 mm)
F - Pressure relief valve (15 mm)
G - Heating drain point
H - Cold water inlet filter
I - Cyclone
K - Wall jig

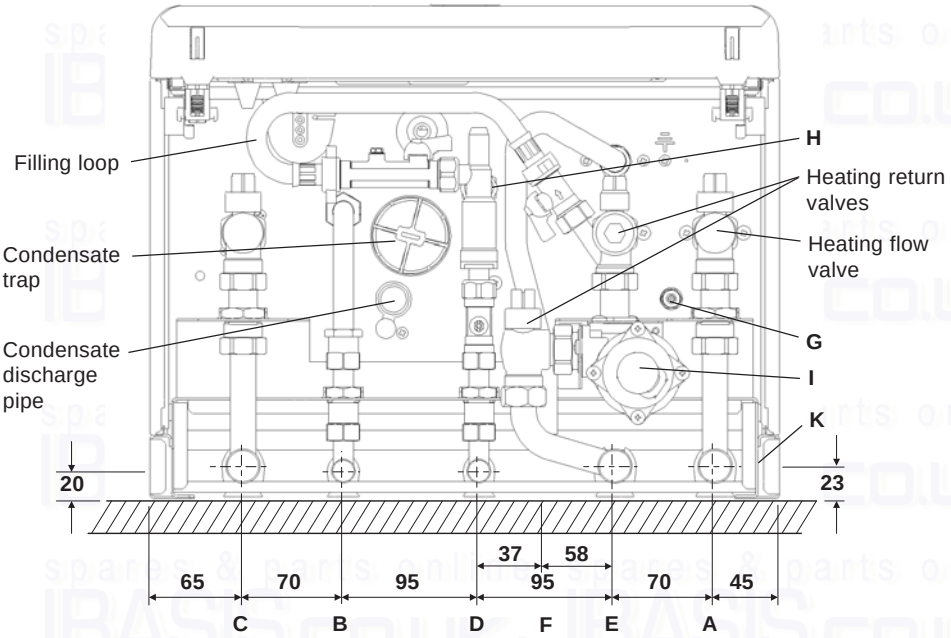

Fig. 14b - With wall jig

4.6 FIT THE FLUE - Figs. 15, 16

The following procedure applies to fitting an Alpha CD Easy-Flue to both rear or side exit flue - horizontally only.

1. The CD Easy-Flues are suitable for use in the flue length ranges shown in the tables below.
   Note: Where the length is less than the minimum or more than the maximum, refer to Section 4.7.

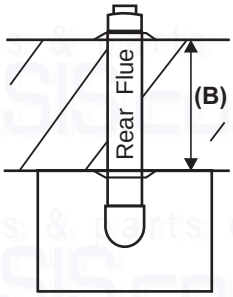

CD Easy-Flue	B (mm)	
	Max	Min
500 mm	525	300
1000 mm	970	760

Note: Add 45 mm to dimension B if the wall jig is used.

Fig. 15

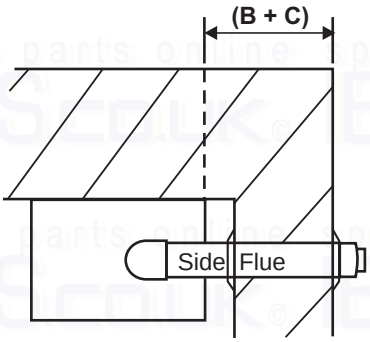

CD Easy-Flue	B + C (mm)	
	Max	Min
500 mm	440	215
1000 mm	885	675

Fig. 16

2. Determine the overall length (L) of flue required, (see Fig. 17) as follows:-
   Rear flue L = wall thickness (B) + 60 mm (105 mm if the wall jig is used)
   Side flue L = wall thickness (B) + distance between boiler and wall (C) + 145 mm

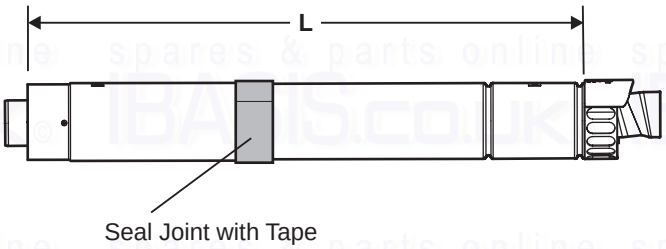

Fig. 17

3. Adjust the telescopic section of the flue to the distance 'L', ensuring that the two labels marked 'TOP' are aligned, then seal and secure the joint between the ducts with the sealing tape supplied.
   Note: Always ensure that there is a minimum overlap of 25 mm when fully extending the telescopic section.
4. Pass the flue assembly through the wall (from inside or outside).
   Note: Internal fitting - If there is no access to make good the outside wall, locate the outside (black) flue sealing collar onto the outer duct of the flue immediately before the terminal grille onto the location provided. Push the flue assembly through the 130 mm flue hole, so that the collar completely passes through the wall. Then pull the flue assembly back into the correct position. Visually check that the collar is sealing the outside wall and that it is not restricting any of the openings of the flue terminal.

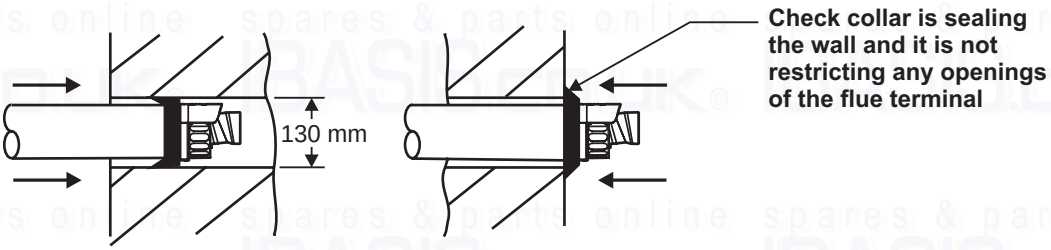

Fig. 18 - Fitting the flue from inside

5. Position the smaller Easy-Flue 40 mm clamp (with seal) supplied, over the bend. Fit the bend to the boiler and rotate to the correct position. Secure in position using the clamp. Ensure the clamp is located centrally over both the bend and boiler adaptor.
6. Fit the inside (white) flue sealing collar over the Easy-Flue. If it was not previously fitted, fit the outside (black) flue sealing collar onto the flue immediately before the terminal grille onto the location provided.
7. Slide the larger Easy-Flue 45 mm clamp over the outer duct and pull the flue assembly towards the bend, locating the inner duct into the seal joint on the bend. Ensure the labels marked 'TOP' are positioned at the top before securing the flue assembly to the bend with the clamp (three screws) located centrally over the joint.
   Note: Check the flue terminal protrudes 120 mm out of the wall and the inner duct of the terminal is positioned correctly (see Fig. 19).
8. Make good the inside wall by pushing the inside flue sealing collar up to the wall.

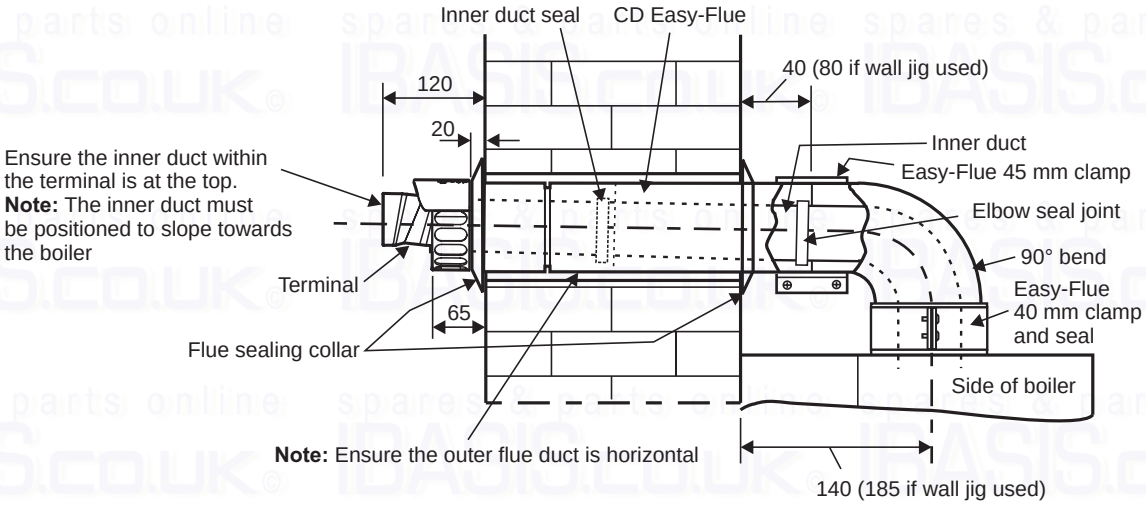

Fig. 19 - Rear flue

4.7 REDUCING THE FLUE - Fig. 20

When the flue length required is less than the minimum stated in Section 4.6, paragraph 1, refer to Fig. 20.

Discard the first telescopic section (**not** the section with the terminal) of the Easy-Flue 1000 mm or 500 mm and cut to the required length.

Note: Ensure that all cuts are square and free from burrs.

Once assembled with the components pushed home, the flue is fully sealed.

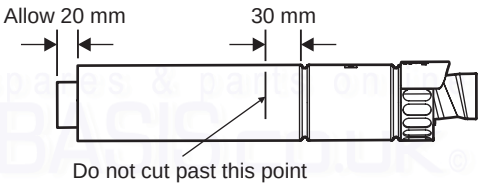

Fig. 20

4.8 EXTENDING THE FLUE - Fig. 21

Note: The flue assembly length must not exceed the maximum length stated, including the equivalent lengths of any extensions, bends etc, used for plume management components. **CD boilers must not exceed the maximumum of an equivalent horizontal flue length of 12 m.**

1. When the flue length required is more than the maximum stated in Section 4.6, paragraph 1, refer to the table below and Figs 15 and 16.

Rear Flue length (B)	Side Flue length (B + C)	Comments
Up to maximum:- 11.885 m (Subtract 45 mm if the wall jig is used)	Up to maximum:- 11.805 m	Alpha CD 750 mm flue extension (Part No. 6.2000750) or 1000 mm extension (Part No. 6.2001050) is required to extend the range of telescopic flue. Refer to Section 4.8 for instructions on how to extend the flue. **Note:** A 130 mm flue hole (127 mm core drill) may be required in the wall. This is when the extended flue is passed through the wall.

Additional support brackets are required when extending the flue. These are available from Alpha, Part No. 6.1000355.

2. Use the template (supplied with the boiler) to mark the required flue position, ensure the slope towards the boiler is correct.
3. Determine the overall flue length as described in Section 4.6, paragraph 2 to determine the number of Alpha CD 750 or 1000 mm flue extensions required.
4. Assemble the flue extensions together by locating the inner duct into the seal joint and secure each extension together with the extension clamps supplied (three screws). Ensure that the clamps are positioned centrally over the joints.
   Note: If it is required to cut an extension, **DO NOT** cut the end of the inner duct that incorporates the seal joint. Ensure the inner duct end without the seal joint is cut so that it is 20 mm longer than the outer duct.
   Ensure that all cuts are square and free from burrs.
   Once assembled with the components pushed home, the flue is fully sealed.
5. Adjust the telescopic section of the Easy-Flue to the required length and secure the Easy-Flue with the sealing tape supplied. Fit the Easy-Flue to the extensions by locating the inner duct into the seal joint and secure with the clamp (three screws), ensuring it is located centrally over the joint.
6. Mark the end of the flue assembly 'TOP' where it is connected to the boiler, so that the 'TOP' of the flue terminal is aligned with the 'TOP' at the boiler end of the flue assembly.
7. Pass the complete flue assembly through the wall.
8. Position the smaller Easy-Flue 40 mm clamp (with seal) supplied, over the bend. Fit the bend to the boiler and rotate to the correct position and secure in position. Ensure the seal is located centrally over both the bend and boiler adaptor. If the inside sealing collar (white) is being used to make good the inside wall, then it will need to be fitted before assembling the flue.
9. Slide the larger Easy-Flue 45 mm clamp (two screws) over the outer duct and pull the flue assembly towards the bend, locating the inner duct into the seal joint on the bend.
10. Secure the flue assembly to the bend with the clamp ensuring it is positioned centrally over the joint, ensuring the 'TOP' marked on the outer duct is positioned at the top.
    Note: Check the flue terminal protrudes 120 mm out of the wall and that the inner duct of the terminal is positioned correctly, i.e. the inner duct within the terminal is at the top. See Fig. 21.
11. Make good the outside wall by fitting the outside sealing collar (black) onto the location provided immediately behind the flue terminal grille. Make good the inside wall using the inside sealing collar (white) if required.

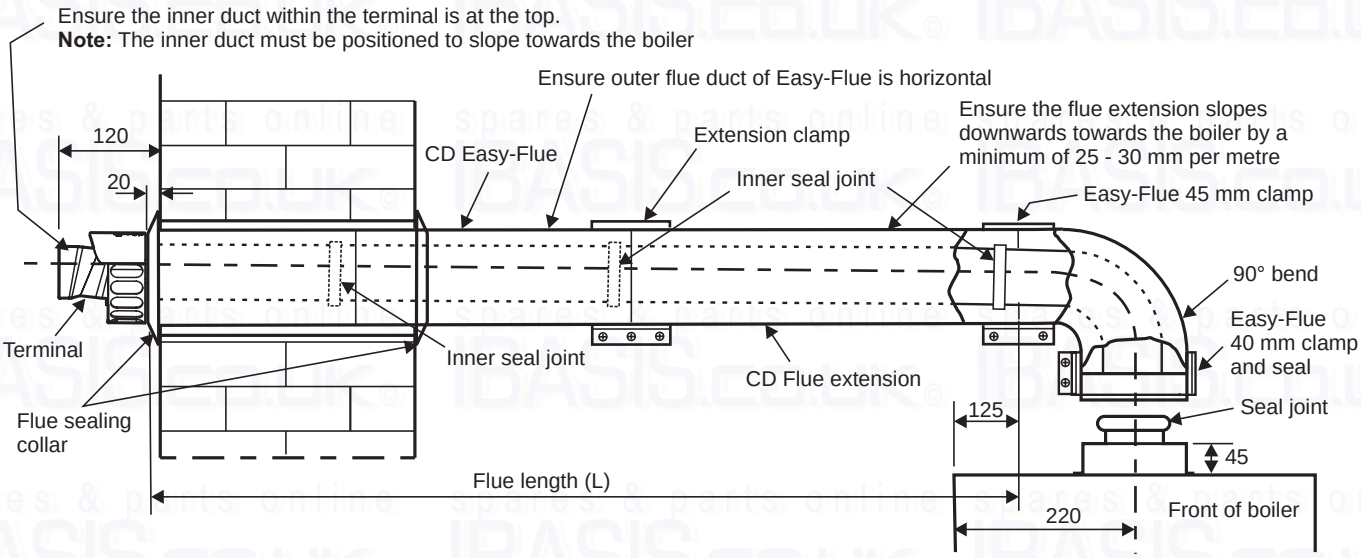

Fig. 21 - Side flue

4.9. FIT PLUME MANAGEMENT COMPONENTS - (OPTIONAL)

The following procedures detail the options for management of the exhaust flue gas/plume emitted from the terminal.

a. The terminal supplied with the Easy-Flue can be altered to divert exhaust flue gas/plume at an angle.

This can be achieved by simply turning the end section of the terminal to the desired angle.

b. The CD Easy-Flue can be converted to allow the inner flue duct to be extended so as to position the terminal in an area where the exhaust flue gas/plume will not cause a nuisance. This can be done before or after installation of the flue, providing there is access to the terminal from outside.

i. Remove the screws (1 in Fig. 22) securing the terminal and remove the terminal by pulling it from the flue assembly. Remove the screw (2 in Fig. 22) securing the terminal end section and remove the end section from the terminal.

ii. Locate a 93° Plume Management bend into the flue assembly and rotate it to the direction required.

iii. Connect to the 93° bend the required Plume Management components as detailed and refer to Fig. 22.

Notes:

1. The wall support brackets must be used to secure the Plume Management pipework to the wall and prevent disconnection of the 93° bend from the flue assembly or any other component.
2. Each joint must be secured with one of the screws provided to prevent accidental disconnection.
3. Ensure there is always a slight slope towards the flue assembly fitted in the wall and there is no part of the plume management pipework where condensate/rain will collect and cause a blockage or any restriction.

iv. Terminate the Plume Management pipework by fitting the terminal end section (push-fit) previously removed. Refer to Fig. 23.

v. The Plume Management components available for extending the inner flue duct are as follows:-

Plume Management 93° bend 60 mm dia. (each 93° bend equivalent to 1.3 m flue length)
Plume Management 45° bend 60 mm dia. (each 45° bend equivalent to 0.9 m flue length)
Plume Management 1000 mm extension 60 mm dia. (equivalent to 1 m flue length)
60 mm dia. wall bracket

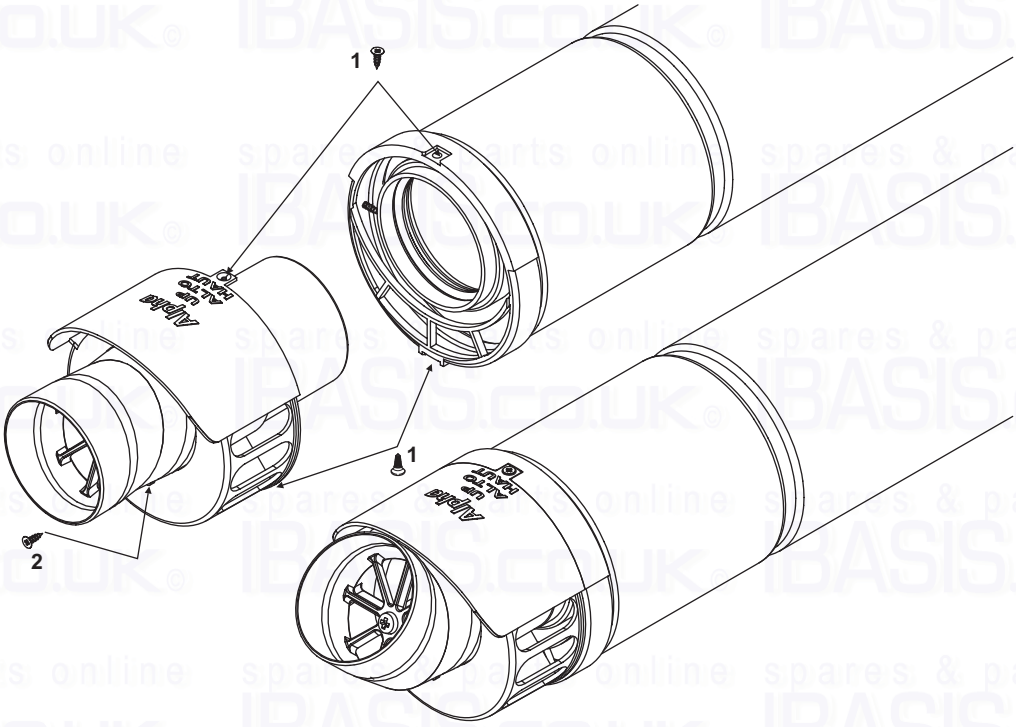

Fig. 22

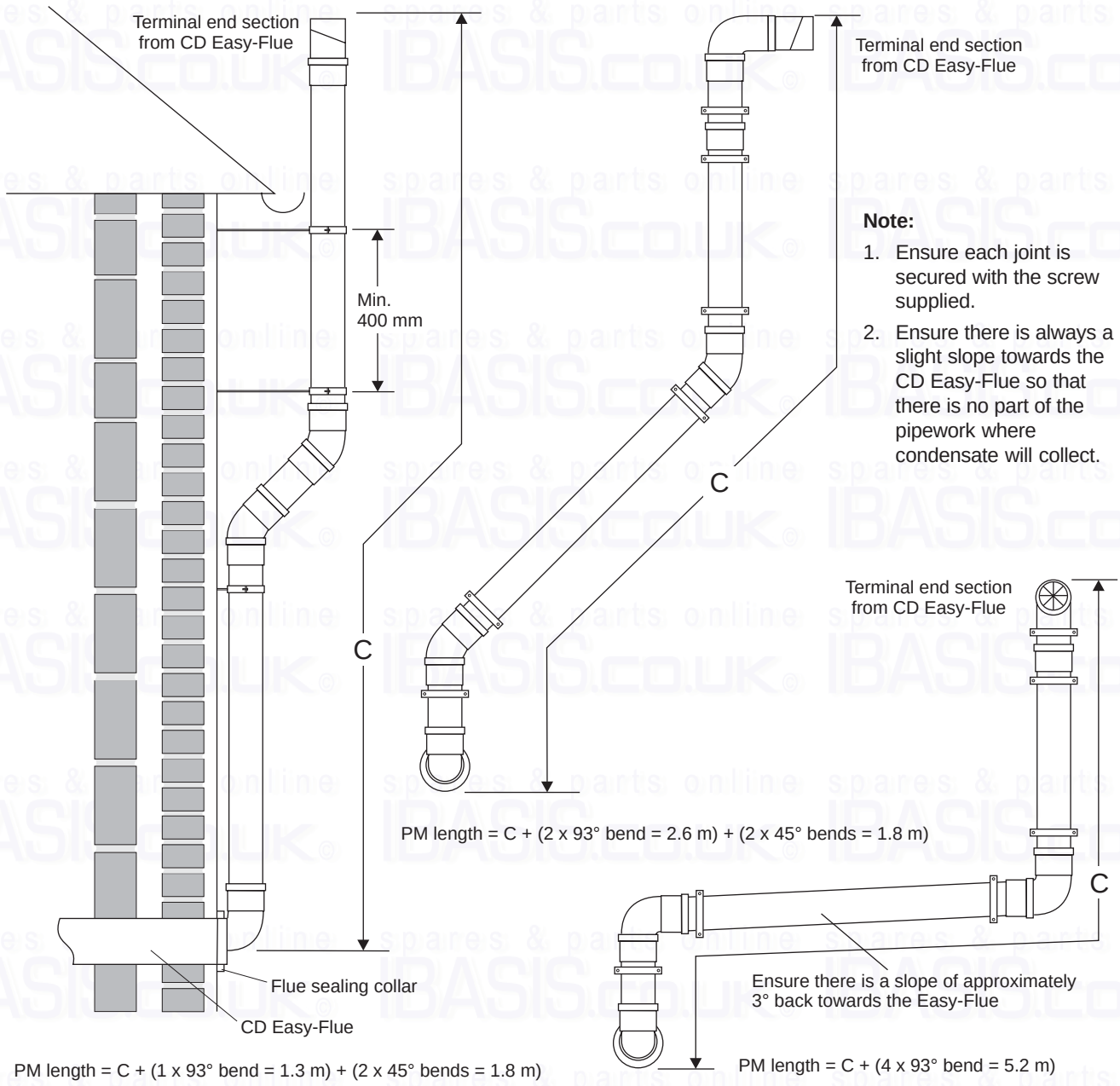

Note:

1. Ensure each joint is secured with the screw supplied.
2. Ensure there is always a slight slope towards the CD Easy-Flue so that there is no part of the pipework where condensate will collect.

Fig. 23

Note: The equivalent horizontal flue assembly length + the equivalent plume management length (PM length) must not exceed the maximum flue length stated for each boiler, i.e.

Alpha CD boiler maximum equivalent flue length must not exceed 12 metres.

4.10 CONNECT THE MAINS SUPPLY - Fig. 24

1. Gain access to the boiler terminal block by releasing the two fixing screws (one each side) securing the control panel and lowering the panel. Refer to Technical Data, Section 2.9 for connection details.
2. **Note:** This boiler has been fitted with a mains supply cable. However, if it is necessary to fit an alternative supply cable, ensure the cable clamp that has been fitted is removed and connect as follows:-
   Remove the two screws securing the terminal block cover from the back of the control box (see Fig. 24). Pass the mains supply cable through the cable clamp and connect as follows:- Brown to L, Blue to N and Green/Yellow to ⏚. Ensure correct polarity.
   Note: Ensure that the length of the earth wire is such that if the supply cable is pulled out of its clamp the live and neutral wires become taut before the earth wire.
   The main terminal block can be removed by pulling it off the pins to give easy access to the terminals.
   Do not switch on the electrical supply at this stage.
3. If an external control, i.e. room thermostat or external clock is to be fitted, remove the terminal block cover and remove the link between terminals 1 and 2. Pass the cable through the cable clamp and connect it to terminals 1 and 2. Replace the terminal block cover. (Refer to Section 2.9).
4. Replace the terminal block, ensuring it is located correctly on the plastic pins and replace the cover.
5. Ensure that there is sufficient free cable to allow the control panel to be raised and lowered then tighten the cable clamp screws.
6. Leave the control panel open until commissioning procedures have been completed.
7. Carry out electrical system checks - Short circuit, Polarity, Earth continuity and Resistance to earth with a suitable multimeter.

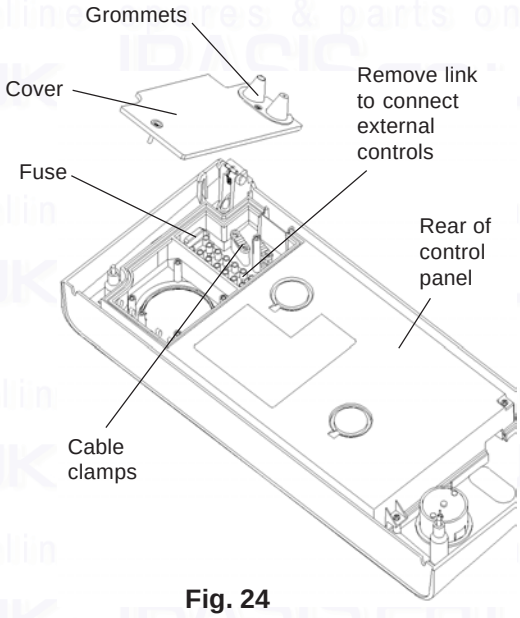

Fig. 24

4.11 FIT THE CLOCK KIT - Fig. 25

Ensure the electrical supply to the boiler is isolated.

Important: Only use an Alpha single channel clock. **Do not** fit a two channel clock.

1. Remove the two screws securing the clock cover at the rear of the control panel.
2. Remove and discard the clock blanking panel.
3. Insert the clock into the opening and secure in place with the screws supplied.
4. Disconnect the clock wiring from the terminal block and connect it to the clock as follows:-
   Blue wire to terminal 1, Brown wire to terminal 2 and Red wires to terminals 3 and 4, (or as per the instructions supplied with the clock). Ensure wiring is correct.
5. Replace the clock cover. Do not overtighten the fixing screws.
6. Leave the control panel open until commissioning procedures have been completed.

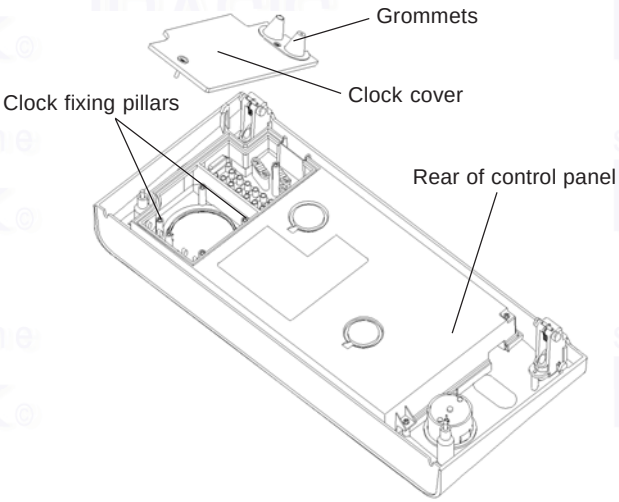

Fig. 25

5 COMMISSIONING

When commissioning the boiler, ensure the Benchmark Checklist is completed.

5.1 FILL THE SYSTEM

1. The boiler is fitted with an automatic air vent positioned on the pump (see Fig. 2), ensure that the vent is always open.
2. Open the central heating flow and return valves (slot in-line with valve) (see Fig. 14).
3. Open the fill point valve on the filling loop until water is heard to flow. To aid venting, the boiler drain point (see Fig. 2) may be opened until water flows out. Close the drain point as soon as water appears.
4. To remove the air - Vent each radiator in turn, starting with the lowest in the system.
5. It is important that the pump is properly vented to avoid it running dry and damaging its bearings. Unscrew and remove the cap from the centre of the pump. Using a suitable screwdriver rotate the exposed spindle about half a turn, then replace the cap.
6. Check the operation of the pressure relief valve (see Fig. 2) by turning the head anti-clockwise until it clicks. The click is the valve lifting off its seat allowing water to escape from the system - check that this is actually happening.
7. Continue to fill the system until the pressure gauge indicates 1.0 bar. Close the fill point valve and check the system for water soundness, rectifying where necessary. Disconnect the filling loop from the mains supply.
   Water may be released from the system by manually operating the drain point (see Fig. 2) until the system design pressure is obtained. The system design pressure (cold) should be between 0.75 and 1.25 bar.
   Refer to Sections 3.7 and 3.8. System volume, Flushing and Filling the system.
8. Open the mains water inlet valve (see Fig. 14). Turn on all hot water taps and allow water to flow until no air is present. Turn off taps.
9. Ensure that the condensate trap has been filled with water. Refer to Section 4.5, paragraph 4.

5.2 BOILER CONTROLS - Fig. 26

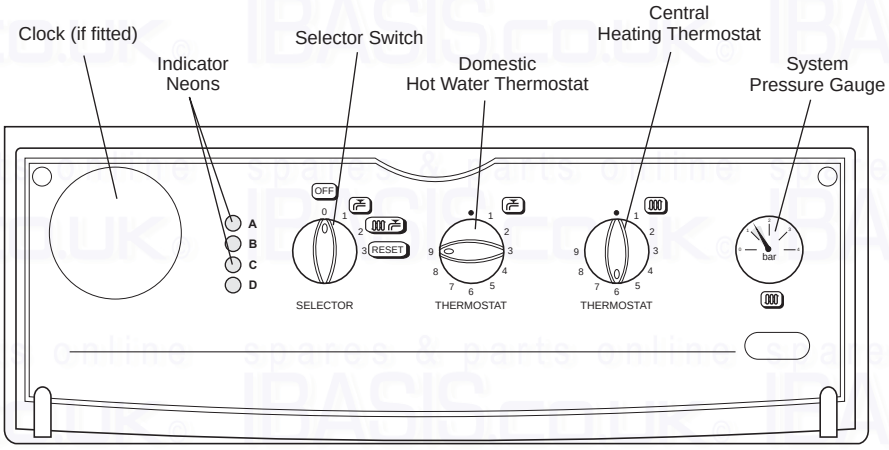

Fig. 26

5.3 TEST FOR GAS TIGHTNESS AND PURGE THE SUPPLY

1. With the boiler gas service cock closed (slot at right angles to valve). Pressure test the gas supply and inlet pipework connection to the boiler gas service cock for tightness in accordance with BS 6891.
2. Loosen the gas inlet pressure test point screw on the gas valve (see Fig. 27). Ensure the gas supply is on and open the boiler service cock to purge in accordance with BS 6891.
3. Retighten the test point screw and test for gas tightness. Close the boiler gas service cock.

General

Please Note: The combustion for this appliance has been checked, adjusted and preset at the factory for operation on the gas type defined on the appliance data plate. No measurement of the combustion is necessary. Do not adjust the air/gas ratio.

Having checked:

That the boiler has been installed in accordance with these instructions.

The integrity of the flue system and the flue seals, as described in Sections 4.6 and 4.7.

The integrity of the boiler combustion circuit and relevant seals.

5.4 INITIAL LIGHTING - Refer to Fig. 26

1. Ensure that the gas and electrical supplies to the boiler are off and that the mains water inlet valve and the central heating flow and return valves are open.
2. Turn on the gas and electrical supplies to the boiler.
3. Ensure all external controls are calling for heat.

   If the optional Clock is fitted, refer to the User's instructions, set the time and ensure the Clock is in an 'on' mode.
4. Set the hot water and central heating thermostats to maximum.
5. Set the selector switch to (DHW only). Open a hot water tap, the main burner will light and the boiler will provide hot water. Close the tap and the burner will go out.
6. Set the selector switch to (CH and DHW). The boiler will now run in the central heating mode. The pump will start, the fan will start and the main gas valve solenoid will open allowing the main burner to light.

5.5 CHECK THE BURNER PRESSURES - Figs. 27, 28

Turn the boiler off. Remove the two pressure test point screws at the top of the boiler and connect a differential pressure gauge to P1 and P2 as shown in Fig 28. Allow the boiler to run for 10 minutes and check the differential burner pressures.

Hot water mode

1. Set the selector switch to (DHW only) and fully open a hot water tap.
2. The burner will light at the ignition rate and the burner pressure will increase to maximum.
3. Gradually close the hot tap and check that the burner pressure decreases to its minimum. Fully open the tap and check that the burner pressure increases. Close the tap and check that the burner goes off.

   Note: The burner pressure settings have been factory set and do not require adjusting. If incorrect, check that the inlet gas working pressure is 20 mbar. If the inlet gas working pressure is not 20 mbar, either the pipework is too small or the gas supply to the house is insufficient, in which case contact your gas supplier.

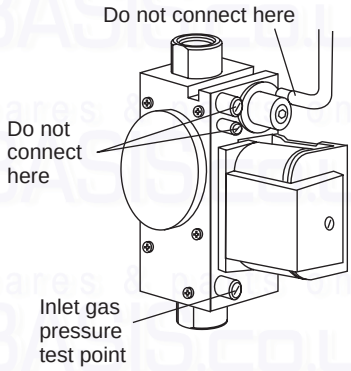

Fig. 27

Central heating mode

1. Set the selector switch to (DHW and CH).
2. The burner will light at the ignition rate and will increase to the factory pre-set maximum output after 1 minute.
3. Turn off the boiler. Disconnect the pressure gauge and tighten the test point screws.

Test for gas tightness using suitable leak detection fluid.

Note: Refer to Technical Data, Section 2.1 for the required differential burner pressures.

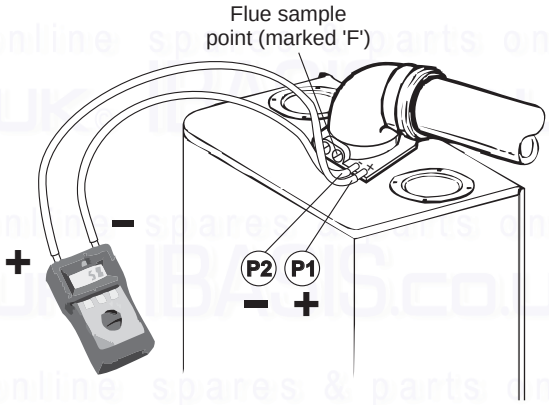

Fig. 28

5.6 FINAL COMMISSIONING

1. Allow the heating system to heat up, then balance the system to achieve the necessary temperature difference across the heating flow and return pipes at the boiler and check the system volume and pressure. (Refer to Technical Data, Sections 2.2 and 2.8).
2. **Seasonality valve (Fig. 13a) -** The valve is factory set, however it can be adjusted to the User's requirements, i.e. to the required temperature of hot water from the tap. This is achieved by fully opening a hot water tap and turning the adjusting screw (refer to Fig. 14a) with a screwdriver. Anticlockwise to increase the temperature and clockwise to decrease.
3. Turn off the boiler.
4. Thoroughly flush out the water pipework (refer to Section 3.9) and with no pressure in the boiler heating circuit, empty the cyclone (if applicable) at it's drain point (see Fig. 14) of any debris. Clean the mains water inlet filter (see Fig. 14).
5. Re-pressurise the system as described in Section 5.1.

5.7 FINAL ASSEMBLY

1. Raise the control panel and secure in position with the screws provided.
   Note: If the wall jig is used, fit the bottom tray over the base of the boiler.
2. If the boiler is to be left in service with the User, set the controls, clock (if fitted, see User's Operating manual) and room thermostat (if fitted) to the User's requirements.
3. If the boiler is not to be handed over immediately, close the boiler gas service cock and switch off the electrical supply.
4. If there is any possibility of the boiler being left during frost conditions, then the boiler and system should be drained (refer to Section 8.2). It is recommended that a label is attached to the boiler drawing attention to the fact that the system has been drained.
5. Complete the details of the installation in the Benchmark Checklist in Section 12.

5.8 USER INFORMATION

The User must be advised (and demonstrated if necessary) of the following important points:-

1. How to light and turn off the boiler and how to operate the system controls.
2. The importance of annual servicing of the boiler to ensure safe and efficient operation.
3. That any servicing or replacement of parts must only be carried out by Gas Safe registered personnel.
4. Ensure that the boiler controls and room thermostat (if fitted) are set to the User's requirements.
5. Tell the User about the sealed system pressure.
6. Tell the User that if the electrical supply is on and the boiler has not operated for 24 hours for heating or hot water, the pump will automatically operate for 5 minutes.
7. Explain to the User that an internal frost thermostat is fitted in the boiler, and that the electrical supply to the boiler must be left on for the thermostat to operate, i.e. the selector switch must be set at (DHW only) or (CH and DHW).
8. Explain to the User that in certain weather conditions the terminal will emit a plume of steam, i.e. water vapour. This is safe and quite normal.
9. Show the User the position of the pressure relief valve and condensate discharge pipes.
10. Hand the User's instructions to the User.
11. Ensure the Benchmark Checklist in Section 12 has been completed after the boiler has been installed and commissioned.
    Note: It is a requirement that the installation is registered by the installer through the Gas Safe Gas Work Notification Scheme.
12. Leave these Installation and Servicing instructions with the User for use on future calls.

6 BOILER OPERATION

The boiler operating mode is controlled by the selector switch on the facia panel.
When set to , the boiler will only operate in the Domestic Hot Water mode. When set to , it will operate in the Domestic Hot Water and Central Heating mode.
Note: The clock (if fitted) only controls the operating times of the central heating, not domestic hot water - DHW is available continuously.
Domestic hot water supply always takes priority over central heating. If a demand for hot water is required during a central heating period, the boiler will automatically switch to the hot water mode until the demand is satisfied. This interruption in the central heating is only when the demand for hot water is present and should not be noticed by the User.

6.1 CENTRAL HEATING MODE

If there is a call for heat, the pump will start to circulate the central heating water. The fan will run and the pre-mix burner will light. The burner output then automatically adjusts to suit the system demand; as the temperature of the water in the boiler approaches that set by the adjustable temperature thermostat, the burner output is reduced. When the set temperature is reached, the burner is turned off. The fan continues to run for 50 seconds and the pump continues to run for three minutes, after which the burner can relight if required. If the primary sensor has not registered the pre-set temperature but the room thermostat is satisfied the burner is turned off. The fan continues to run for 50 seconds and the pump continues to run for 60 seconds. In this instance there is no delay before the burner will relight.
If there is a demand for DHW during the burner delay, the boiler will operate to provide DHW until the tap is closed; the boiler will then immediately revert to provide CH if there is a demand.
Note: If the system pressure is very low, the primary pressure switch will prevent the boiler from operating.

6.2 DOMESTIC HOT WATER MODE

When a demand for hot water (by opening a hot tap, etc.) is sensed by the flow switch, the pump starts and the burner lights, increasing immediately to its maximum output. Water in the boiler is then diverted from the central heating system to the domestic hot water heat exchanger, heating the incoming mains water. The burner output is varied to maintain the temperature of the hot water as that set by the adjustable temperature selector. When the flow switch senses that hot water is no longer required the burner is turned off and the boiler immediately returns to the central heating mode.
If the selector is set for hot water only - The burner is turned off, the fan will continue to run for 50 seconds and the pump will stop immediately.
In both modes the fan modulates according to the output required.

6.3 SEASONALITY VALVE

The seasonality valve will maintain the set hot water outlet temperature for both summer and winter conditions by automatically changing the flow rate through the boiler. When the mains inlet water temperature is cold (in winter), the valve reduces the flow rate and when the temperature increases (in summer) the flow rate increases to maintain the set outlet temperature.
Note: No flow restrictor is fitted as the DHW flow rate is controlled by the seasonality valve.

6.4 FROST THERMOSTAT

The boiler incorporates a built in frost thermostat which automatically turns on the boiler and pump if the water in the boiler falls below 4°C, providing the electrical supply is on and the selector switch is set to position 1 ( ) or position 2 ( ). The boiler will operate until the water temperature in the system reaches approximately 30°C.
Any other pipework outside the boiler should be protected from the risk of freezing and protected with insulation. Additional protection from an external frost thermostat and pipe thermostat should also be considered.

6.5 PUMP

If the electrical supply is on and the boiler has not operated for 24 hours for heating or hot water, the pump will operate automatically for thirty seconds every 24 hours.

6.6 INDICATOR NEONS

When neons A (red), B (red), C (yellow), D (green) are illuminated, the following conditions apply:-

Neon	
D	Illuminated continuously - Electricity supply to the boiler is on.
C	Illuminated continuously - Burner is alight.
A	Flashing on and off - Temperature sensor fault.
B	Flashing on and off - Overheat thermostat has operated. Rotate selector switch to the reset position (3) to reset.
B	Illuminated continuously - Burner has failed to light. Rotate selector switch to the reset position (3) and the ignition sequence will restart after a delay of about 30 seconds.
A and **B**	Flashing on and off at the same time - Blocked flue or fan fault.
A and **B**	Flashing on and off alternatively - System pressure is very low and re-pressurisation is required.
A Flashing and **B**	Illuminated continuously - Pump fault or restricted flow.

Note: Do not hold the selector switch in the reset position (3) for more than 2 to 3 seconds.

7 ROUTINE SERVICING

To ensure efficient operation of the boiler it is recommended that it is checked and serviced as necessary at regular intervals. The frequency of servicing will depend upon the particular installation conditions and usage, but in general once per year should be adequate.

It is the law that any service work must be carried out by a competent person, i.e. Gas Safe registered personnel.

Warning: Before servicing the boiler, isolate the electrical supply and close the boiler gas service cock. Allow the boiler to cool.

The data label is positioned on the inside of the left hand side panel.

Always test for gas tightness after servicing any gas carrying components.

Always carry out electrical system checks i.e. Earth Continuity, Resistance to Earth, Short Circuit and Polarity with a suitable meter before and after servicing.

General

Please Note: During routine servicing, and after any maintenance or change of part of the combustion circuit, the following must be checked:

1. The integrity of the flue system and the flue seals, as described in Section 4.6 and 4.7.
2. The integrity of the boiler combustion circuit and relevant seals.
3. The operational (working) gas inlet pressure at maximum rate, as described in Section 5.5.3.
4. The combustion performance, as described in Section 7.

Competence to carry out the check of combustion performance

Please Note: *BS 6798:2009 Specification for installation and maintenance of gas-fired boilers of rated input not exceeding 70 kW net* advises that:

1. The person carrying out a combustion measurement should have been assessed as competent in the use of a flue analyser and the interpretation of the results.
2. The flue gas analyser used should be one meeting the requirements of BS 7927 or BS-EN 50379-3 and be calibrated in accordance with the analyser manufacturers' requirements, and
3. Competence can be demonstrated by satisfactory completion of the CPA1ACS assessment, which covers the use of electronic portable combustion gas analysers in accordance with BS 7967, Parts 1 to 4.

Combustion check

Connect the flue gas analyser to the flue gas sampling point as shown in Fig. 29.

Notes: **1.** Prior to servicing, it is recommended that a flue gas analyser is used to measure the performance of the boiler (refer to Fig. 28 for the position of the flue sampling point). If the CO/CO_2 ratio measured is greater than 0.003 **or** when other checks and comments from the customer have indicated that there may be problems, cleaning of the heat exchanger will be necessary. All Sections 7.1, 7.2, 7.3 and 7.4 **must** be carried out. Repeat the flue gas analyser test after reassembling the boiler and check that the CO/CO_2 ratio is less than 0.003.

If the CO/CO_2 ratio reading is still above, then you must repeat Sections 7.1, 7.2, 7.3 and 7.4 until you obtain a ratio reading of below 0.003.

If the combustion reading is greater than the acceptable value <u>AND</u> the integrity of the complete flue system and combustion circuit seals have been verified and the inlet gas pressure (and gas rate) have been verified. Please call our Technical Helpline.

2. If the CO/CO_2 ratio measured is less than 0.003 and other checks and comments from the customer suggest there are no problems then only Section 7.1 and Section 7.2 paragraphs 1, 2 and 3 need to be carried out to allow a visual check of the components within the room sealed chamber.

3. If a flue gas analyser is not available, then all Sections 7.1, 7.2, 7.3 and 7.4 **must** be carried out.

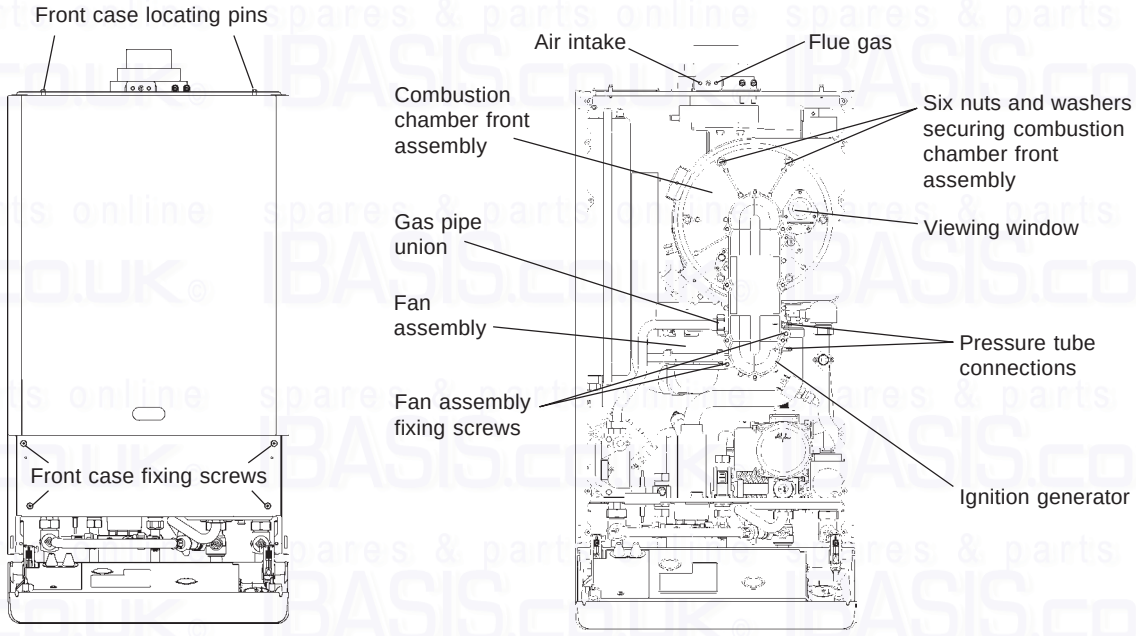

Fig. 29

7.1 IMPORTANT NOTES PRIOR TO SERVICING

1. Check the entire flue length and joints including the flue terminal outside. Ensure that all of the flue assembly has been installed correctly and there are no blockages.
2. Run the boiler and check the operation of its controls.
3. Refer to Fig. 28 for location of flue sampling point.
4. Ensure that all system connections and fittings are sound. Remake any joints and check the tightness of any fittings that may be leaking.
5. Refill, vent and re-pressurise the system as necessary. (Refer to Commissioning, Section 5.1).
   If the system pressure exceeds 2.5 bar when operating at maximum temperature, the heating expansion vessel should be checked and re-pressurised, if necessary.
   Notes: 1. Check the expansion vessel charge only when the system pressure is zero.
   2. The expansion vessel pressure test point is accessible from inside the boiler at the top.
6. Check that the condensate trap drain pipe is connected and all joints are sound.
7. Record details of the service in the Service Record Section in Section 13.

7.2 PREPARE FOR SERVICING - Fig. 29

1. Ensure the electrical supply is isolated and the gas supply is off.
2. Unscrew the two screws securing the control panel and lower the panel.
3. Remove the four screws securing the front case. Lift the case up and forwards to remove.
4. Disconnect the gas supply pipe union.
5. Remove the two screws securing the fan assembly to the combustion chamber front.
6. Remove the two pressure tubes, noting their positions.
7. Disconnect the electrode lead from the ignition generator and the in-line connector to the flame sensing electrode.
8. Remove the six nuts and washers securing the combustion chamber front assembly and remove the assembly.

7.3 CLEANING THE BOILER

1. Remove any deposits from heat exchanger using a suitable soft brush. Do not use a brush with metallic bristles.
2. Check the condition of the combustion chamber insulation panels. Any damaged panels must be replaced. (Refer to Component Replacement, Section 8.18).
3. Check the condition of the burner injector on the combustion chamber front assembly, carefully clean them with a soft brush if necessary.
   Do not use a brush with metallic bristles as this might damage the injector.
4. Remove any deposits from the heat exchanger coils. This can be done by suction or water sprayed onto the coils. Ensure all electrical components are protected from water. Any water used to clean the heat exchanger will drain to the condensate trap.

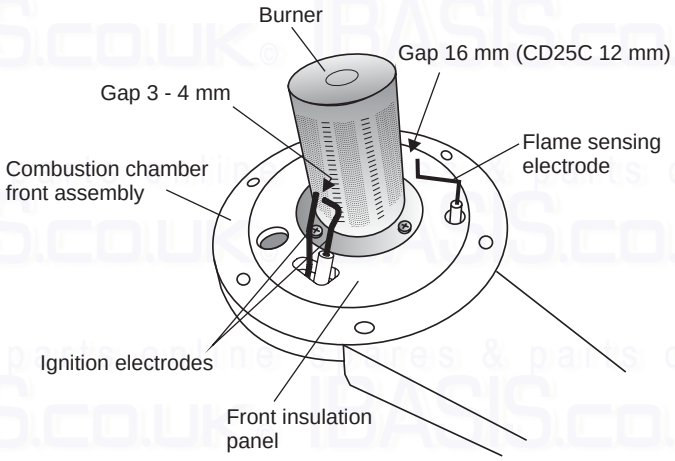

Fig. 30

5. Unscrew and replace the injector should it appear damaged.
6. Remove the four screws securing the burner (see Fig. 29) and remove the burner. Clean the burner with a soft brush and check that the flame ports are clear. Blockages may be removed with a stiffer brush. Tap the burner, open end down, to remove any deposits from inside.
7. Check the condition of the electrodes.
9. Check the spark gap, positioning and height of the electrodes. See Fig. 30.
10. Unscrew the condensate trap drain cap to remove any deposits.
    Note: Before removing the cap, ensure that the water released from the trap can be contained to avoid spillage. The trap will contain no more than 200 cc of condensate water. Replace the drain cap.

7.4 RE-ASSEMBLE THE BOILER

1. Replace the burner, ensuring it is located correctly and secure it in position using the four screws previously removed.

   Important: Before replacing the combustion chamber front assembly, pour at least 200 cc of water into the coils of the heat exchanger. This is to ensure the condensate trap is full of water before operating the boiler.
2. Replace the combustion chamber front assembly, ensuring it is correctly located.
3. Ensure the electrode lead is connected and the seal is in position in the bottom of the room sealed chamber.
4. Test the connections for gas tightness and re-commission, Sections 5.4 and 5.5.
5. Place the front case panel in position and secure in position with the four screws previously removed, see Fig. 29.
6. Raise the control panel and secure in position with the two screws provided.
7. Check the operation of the boiler. (Refer to Boiler Operation, Section 6).
8. Return all controls to their original settings.

8 COMPONENT REPLACEMENT

It is the law that any service work must be carried out by a competent person, i.e. Gas Safe registered personnel.

Warning: Before replacing any boiler components, isolate the electrical supply and close the boiler gas service cock. Allow the boiler to cool.

Always test for gas tightness after replacing any gas carrying components or disturbing any gas connections.

Always carry out electrical system checks i.e. Earth Continuity, Resistance to Earth, Short Circuit and Polarity with a suitable meter after servicing.

Check the operation of the boiler. (Refer to Boiler Operation, Section 6).

Ensure that all the controls are returned to their original settings.

The replacement of components in Sections 8.3 to 8.15 does not require draining of the boiler.

8.1 GENERAL ACCESS - Fig. 29

Ensure the electrical supply is isolated and the gas supply is off.

1. **If access is required behind the control panel -** Lower the control cover flap and remove the two control panel fixing screws (one each side) and lower the panel.
2. **To gain access behind the casing -** When the control panel is lowered, it exposes four fixing screws that secure the front cover. Remove these screws and lift the front cover off its locating pins at the top of the boiler.
3. **To gain access to the control panel components/PCB -** Remove the five screws securing the rear cover and carefully raise the cover. When replacing the cover, ensure no wires are trapped and all wiring is secured. Secure with five screws - do not overtighten.

8.2 DRAINING THE BOILER - Refer to Figs. 2, 14

Isolate the electricity supply and close the boiler gas service cock (see Fig. 14). Allow the boiler to cool.

1. **Heating circuit**
   Close the central heating flow and return valves (see Fig. 14).
   Connect a suitable pipe to the drain point (see Fig.43) and route it to a suitable container. Open the drain point.
2. **Hot water circuit**
   Close the mains water inlet valve (see Fig. 14).
   Open any hot tap below the level of the boiler to allow as much draining as possible.

Note: Some water will remain in the components and care must be taken when removing them.

8.3 ELECTRODES - See Fig. 30

Gain access behind the room sealed chamber panel as in Section 8.1.

1. **Ignition electrode and lead**
   Disconnect the lead from the ignition generator, noting its position.
   Remove the two screws securing the electrode to the front of the combustion chamber and carefully withdraw the electrode.
2. **Flame sensing electrode and lead**
   Disconnect the flame sensing electrode in-line connector.
   Remove the two screws securing the electrode to the front of the combustion chamber and carefully withdraw the electrode.
3. **Ignition electrode**
   Remove the two screws securing the electrode to the front of the combustion chamber and carefully withdraw the electrode.

Re-assemble in reverse order

8.4 MAIN BURNER - Fig. 30

1. Remove the burner assembly as described in Routine Servicing, Section 7.2.
2. Remove the four screws securing the burner to the combustion chamber front assembly.
3. Re-assemble with a new burner as described in Routine Servicing, Section 7.4.

8.5 BURNER INJECTOR - Fig. 29

1. Gain access to the room sealed chamber as described in Section 8.1.
2. Undo the gas inlet union to the combustion chamber front to gain access.
3. Unscrew the damaged injector and screw in a replacement.
4. Re-assemble in reverse order.

8.6 FAN - Fig. 31

1. Gain access behind the room sealed chamber as described in Section 8.1.
2. Remove the screw securing the air inlet pipe and remove the pipe.
3. Disconnect the fan wiring and remove the two screws securing the fan. Withdraw the fan.
4. Remove the inlet and outlet flanges from the fan. Fit them to the new fan and re-assemble in reverse order. Ensure that the pressure tubes are connected correctly.
5. Re-assemble and test the boiler as described in Routine Servicing, Section 7.4 paragraphs 5 to 9.

8.7 IGNITION GENERATOR - Fig. 31

1. Gain access behind the front panel as described in Section 8.1.
2. Disconnect all the wiring from the ignition generator.
3. Remove the screw securing the generator and remove.
4. Secure the new generator in position and re-connect the wiring.
5. Re-assemble in reverse order.

8.8 TRANSFORMER - Fig. 31

1. Gain access behind the front panel as described in Section 8.1.
2. Remove the two screws securing the transformer and remove the transformer.
3. Disconnect all of the wiring noting their position.
4. Fit the new transformer and re-assemble in reverse order.

8.9 OVERHEAT THERMOSTAT - Fig. 31

1. Gain access behind the front panel as described in Section 8.1.
2. Disconnect the wiring from the overheat thermostat.
3. Remove the two screws securing the overheat thermostat and remove it from the flow pipe.
4. Fit the new overheat thermostat and re-assemble in reverse order.

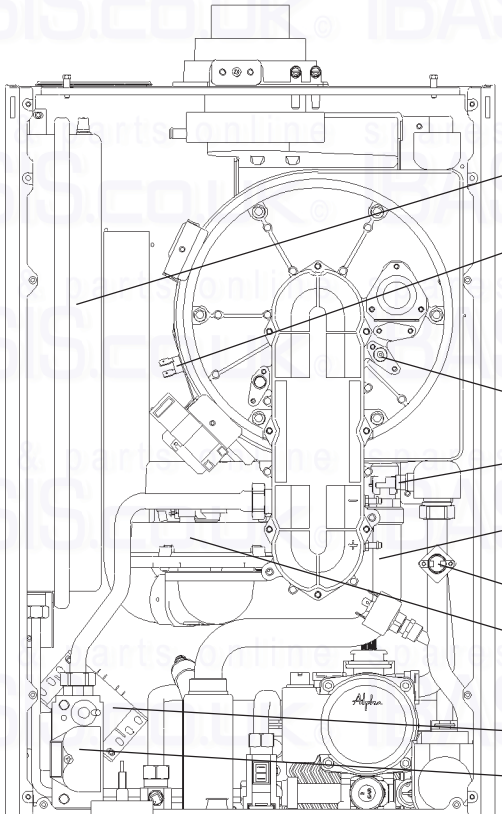

Fig. 31

8.10 FLUE THERMOSTAT - Fig. 31

1. Gain access behind the front panel as described in Section 8.1.
2. Position a suitable screwdriver under the thermostat retaining clip and use it to release the tension on the thermostat, then slide the thermostat out from under the clip.
3. Disconnect the wiring.
4. Fit the new thermostat and re-assemble in reverse order.

8.11 GAS VALVE - Fig. 31

Note: The replacement of the gas valve or PCB must be carried out by a Gas Safe registered engineer with the use of a flue analyser.

1. Gain access behind the front casing as in Section 8.1.
2. Disconnect the positive pressure tube from the gas valve.
3. Loosen the one screw securing the electrical plug and disconnect the plug.
4. Disconnect the burner manifold pipe union and the gas inlet pipe union.
5. Remove the two manifold screws from beneath the boiler and lift out the valve assembly.
6. Lift out the gas valve.
7. Fit the new assembly and re-assemble in reverse order and test for gas tightness.
8. Light the boiler. (Refer to Commissioning, Section 5.4) and the instructions supplied with the replacement valve for adjustment of the valve.
9. Complete re-assembly as described in Routine Servicing, Section 7.4 paragraphs 5 to 9.

8.12 TERMINAL BLOCK FUSE - Refer to Fig. 24

The fuse is located in the boiler terminal block.

1. Gain access as described in Installation, Section 4.10.
2. Lift out the fuse holder and remove the fuse. Fit a fast blow 2 A fuse as a replacement, ensuring that the holder snaps into position.
   Note: A spare fuse is supplied in the terminal compartment.
3. Re-assemble in reverse order, ensuring the terminal block is located correctly on the plastic pins.

8.13 PCB - Fig. 32

Note: The replacement of the gas valve or PCB must be carried out by a Gas Safe registered engineer with the use of a flue analyser.

1. Gain access behind the control panel as described in Section 8.1.
2. Disconnect all the wiring connectors from the PCB.
3. Remove the four fixing screws and carefully withdraw the board from the switch spindles.
4. Re-assemble in reverse order. Refer to the wiring diagram in Section 9.1 for connections.
5. Light the boiler and adjust the PCB as described in the instructions supplied with the replacement PCB.

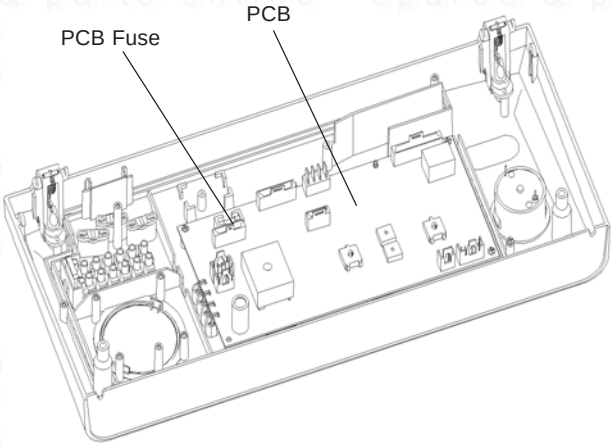

Fig. 32

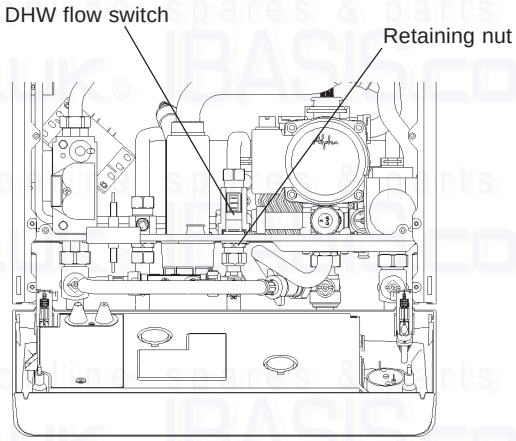

Fig. 33

8.14 DIVERTER VALVE MOTOR ASSEMBLY - Fig. 35

1. Gain access behind the front casing as described in Section 8.1.
2. Remove the diverter valve motor head by unplugging its electrical connection and removing the retaining clip from the back of the motor.
3. Withdraw the motor forwards from the valve body.
4. Re-assemble in reverse order with a new motor.

8.15 CLOCK (if fitted) - Refer to Fig. 25

Note: For replacement only use an Alpha single channel clock. **Do not** fit a two channel clock.

1. Gain access behind the control panel as described in Section 8.1.
2. Remove the two screws securing the clock cover at the rear of the control panel.
3. Disconnect the wiring from the clock.
4. Remove the clock retaining screws and withdraw the clock from the control panel.
5. Fit the new clock, and connect the wires as follows:-
   Blue to terminal 1, Brown to terminal 2 and Red wires to terminals 3 and 4, (or as per the instructions supplied with the clock).
6. Re-assemble in reverse order. Refer to the User's instructions and the boiler's control cover to set the clock.

8.16 DHW FLOW SWITCH - Fig. 33

1. Gain access behind the front casing as described in Section 8.1.
2. Isolate the mains water supply and open all hot taps to drain any water from the boiler.
3. Disconnect the wires from the switch.
4. Undo the nuts at the inlet and outlet of the switch and undo the retaining nut at the bottom. Lift out the switch.
5. Fit the new switch and re-assemble in reverse order.

8.17 PRIMARY HEAT EXCHANGER - See Fig. 34

1. Gain access behind the room sealed chamber panel as described in Section 8.1 and drain the boiler heating circuit as described in Section 8.2.
2. Disconnect the gas inlet union from the combustion chamber front.
3. Disconnect the two differential pressure tubes from the front burner assembly, noting their position.
4. Remove the two screws and six nuts and washers securing the combustion chamber front burner assembly and remove.
5. Remove the overheat thermostat (Section 8.9), flue thermostat (Section 8.10) and the primary temperature sensor (Section 8.20).
6. Disconnect the condensate drain union by pulling out the clip.
7. Undo the two nuts from the heat exchanger flow and return pipes.
8. Remove the screw securing the ignition generator, disconnect the earth lead and remove the ignition generator.
9. Remove the four screws securing the heat exchanger retaining brackets. Two on the front left and two at the rear to the right.
10. Lift up the heat exchanger off the pipes and remove it by carefully withdrawing it out of the boiler.
11. Re-assemble in reverse order, ensuring that new seals are used. Lubricating the seals with the grease supplied will aid assembly.
12. Refill and pressurise the system. (Refer to Commissioning, Section 5.1).

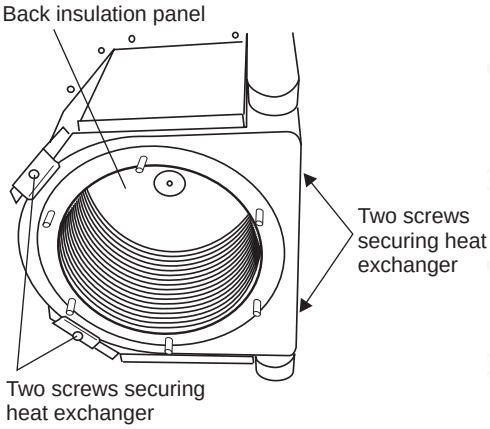

Fig. 34

8.18 COMBUSTION CHAMBER INSULATION

Gain access to the combustion chamber as described in Section 8.1.

Front insulation - see Fig. 30

1. Remove the electrodes from the combustion chamber front as described in Section 8.3.
2. Remove the four screws securing the burner.
3. Carefully remove the insulation.

Back insulation - see Fig. 34

1. Remove the combustion chamber front/burner assembly.
2. Remove the centre screw retaining the insulation.
3. Carefully remove the insulation, suction applied to the centre of the insulation will aid this.

Fit a new panel and re-assemble in reverse order.

Refill and pressurise the system. (Refer to Commissioning, Section 5.1).

8.19 PRESSURE GAUGE - Fig. 35

1. Gain access behind the casing and drain the boiler heating circuit as described in Sections 8.1 and 8.2.
2. Remove the circlip securing the pressure gauge sensor and withdraw the sensor.
3. Remove the main cable grommet in the bottom panel and remove the sensor tube.
4. Depress the two lugs on the pressure gauge and push it out of the control panel.
5. Fit the new gauge using a new 'O' ring on the manifold connection if necessary.
6. Refill and pressurise the system. (Refer to Commissioning, Section 5.1).

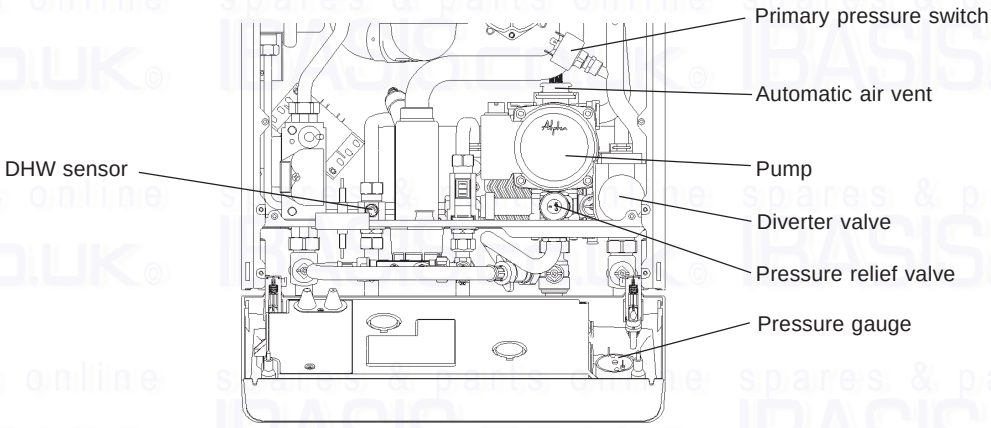

Fig. 35

8.20 TEMPERATURE SENSORS - Refer to Fig. 31 and 35

Note that both sensors are the same.

1. Gain access as described in Section 8.1 and drain (heating circuit for primary sensor or hot water circuit for DHW sensor) as described in Section 8.2.
2. **Primary Sensor -** The primary sensor is positioned on the bottom right hand side of the heat exchanger, see Fig. 31. Disconnect the wiring and unscrew the sensor. Re-assemble in reverse order with a new sensor and sealing washer.

2a. **DHW Sensor -** The DHW sensor is positioned in the hot water outlet pipe, see Fig. 35. Close the mains cold water inlet valve and open the lowest hot water tap to drain the DHW system. Disconnect the wiring and unscrew the sensor from the hot water outlet pipe. Re-assemble in reverse order with a new sensor, replacing the sealing washer if necessary.

8.21 AUTOMATIC AIR VENT - Fig. 35

1. Gain access behind the front casing and drain the boiler heating circuit as described in Sections 8.1 and 8.2.
2. Remove the retaining clip from the manifold and lift out the automatic air vent. Fit a new one using a new 'O' ring.
3. Refill and pressurise the system. (Refer to Commissioning, Section 5.1).

8.22 PUMP - Refer to Fig. 35

Gain access behind the front casing and drain the boiler heating circuit as described in Sections 8.1 and 8.2.

Pump head

1. Using a 5 mm Allen key remove the four socket head screws securing the pump head to the body. Withdraw the head, remove the wiring cover and disconnect the plug.
2. Connect the plug to the new head. Ensure the pump is set to maximum (3) and re-assemble in reverse order.
3. Refill and pressurise the system. (Refer to Commissioning, Section 5.1).

8.23 PRIMARY PRESSURE SWITCH - Fig. 35

1. Gain access behind the front casing and drain the boiler heating circuit as described in Sections 8.1 and 8.2.
2. Disconnect the wiring from the pressure switch.
3. Unscrew the switch from the primary flow pipe.
4. Using the new washer supplied, re-assemble in reverse order.
   When connecting the wiring to the new switch the polarity of the wires is not important.

8.24 PRESSURE RELIEF VALVE - Fig. 35

1. Gain access behind the front casing and drain the boiler heating circuit as described in Sections 8.1 and 8.2.
2. Disconnect the pressure relief valve outlet fitting.
3. Release the two screws and the retaining clip securing the pressure relief valve and pull out the valve.
4. Re-assemble in reverse order.
5. Refill and pressurise the system. (Refer to Commissioning, Section 5.1).

8.25 DHW HEAT EXCHANGER

1. Gain access behind the front casing and drain the boiler heating and hot water circuits as described in Sections 8.1 and 8.2.
2. Release the nut securing the condensate pipe and remove the flexible condensate pipe from the condensate trap. Rotate the pipe to clear.
3. Remove the diverter valve motor as described in Section 8.14.
4. Using a 4 mm Allen key unscrew the two socket head capscrews securing the DHW heat exchanger and withdraw the heat exchanger from the boiler, lifting it upwards and tip it forwards to remove.
   Note: Be careful not to allow water to drip onto any electrical components.
5. Re-assemble in reverse order making sure that the words on the heat exchanger are at the top when fitted and that the seals are in position in the manifold.
6. Refill and pressurise the system. (Refer to Commissioning, Section 5.1).

8.26 MAINS WATER INLET FILTER

1. The mains water inlet filter is located in the body of the DHW flow switch. Refer to Section 8.14 to remove the flow switch.
2. The filter can be removed using a small screwdriver.
3. Clean the filter and re-assemble in reverse order.

8.27 DIVERTER VALVE ASSEMBLY - Fig. 35

1. Gain access behind the front casing and drain the boiler heating circuit as described in Sections 8.1 and 8.2.
2. Remove the diverter valve motor as described in Section 8.14.
3. Unplug the overheat thermostat connections.
4. Remove the heating flow pipe retaining clip from the diverter valve and undo the pipe connection at the heat exchanger. Rotate the pipe to the left and lift upward to remove it from the diverter valve.
5. Remove the heating return pipe retaining clip from the pump housing and undo the pipe connection at the heat exchanger. Pull the pipe from the pump housing and remove.
6. Remove the DHW outlet pipe retaining clip from the diverter valve and undo the nut connecting the other end to the DHW temperature sensor housing and remove the pipe.
7. Using a 4 mm Allen key, undo the two cap head bolts securing the DHW heat exchanger and remove the heat exchanger.
8. Remove the heating flow valve from the bottom of the boiler and undo the return valve from its boiler connection.
9. Remove the four screws at the bottom of the boiler, either side of the flow and return connections and the two screw either side of the expansion relief pipe.
10. Remove the securing screws at the front top and bottom corners of the right hand side panel. This will provide some sideways movement to allow more room to release the valve.
11. Lift the assembly up slightly and pull the diverter valve to the right and off the automatic by-pass.
12. Re-assemble in reverse order using new seals and washers.
13. Refill and pressurise the system. (Refer to Commissioning, Section 5.1).

8.28 EXPANSION VESSEL - Fig. 31

1. Gain access behind the front casing and drain the boiler heating circuit as described in Sections 8.1 and 8.2.
2. Disconnect the pipe from the expansion vessel.
3. Remove the screw securing the top support bracket.
4. Lift the expansion vessel out of the boiler.
5. When replacing the vessel, ensure that the connection is towards the left of the boiler and re-assemble in reverse order using new seals as necessary.
6. Refill and pressurise the system. (Refer to Commissioning, Section 5.1).

8.29 CYCLONE (if wall jig is fitted) - Fig. 14b

1. Remove the bottom tray and close the isolating valves either side of the cyclone.
2. Disconnect the unions from the cyclone. Remove the two screws securing the support bracket and remove the cyclone. Re-assemble with a new cyclone.
3. Pressurise the system. (Refer to Commissioning, Section 5.1).

8.30 CONDENSATE TRAP - Fig. 14a, 14b

1. Gain access behind the front casing as described in Section 8.1.
2. Disconnect the top and drain connection of the condensate trap.
3. Place a container under the boiler and unscrew the bowl at the bottom of the trap, see Fig. 13. Some water will spill from the trap.
4. Remove the screw securing the trap to the bottom of the boiler casing and lift out the trap.
5. Fit the new trap in reverse order.

   Note: Fill the new trap with water once installed.

8.31 SEASONALITY VALVE - Fig. 14a

1. Drain the boiler hot water circuit as described in Section 8.2.
2. Remove the valve by disconnecting the unions from the bottom of the boiler, the mains inlet valve and filling loop.
3. Re-assemble in reverse order using a new valve.

9 WIRING DIAGRAMS

9.1 ILLUSTRATED WIRING DIAGRAM

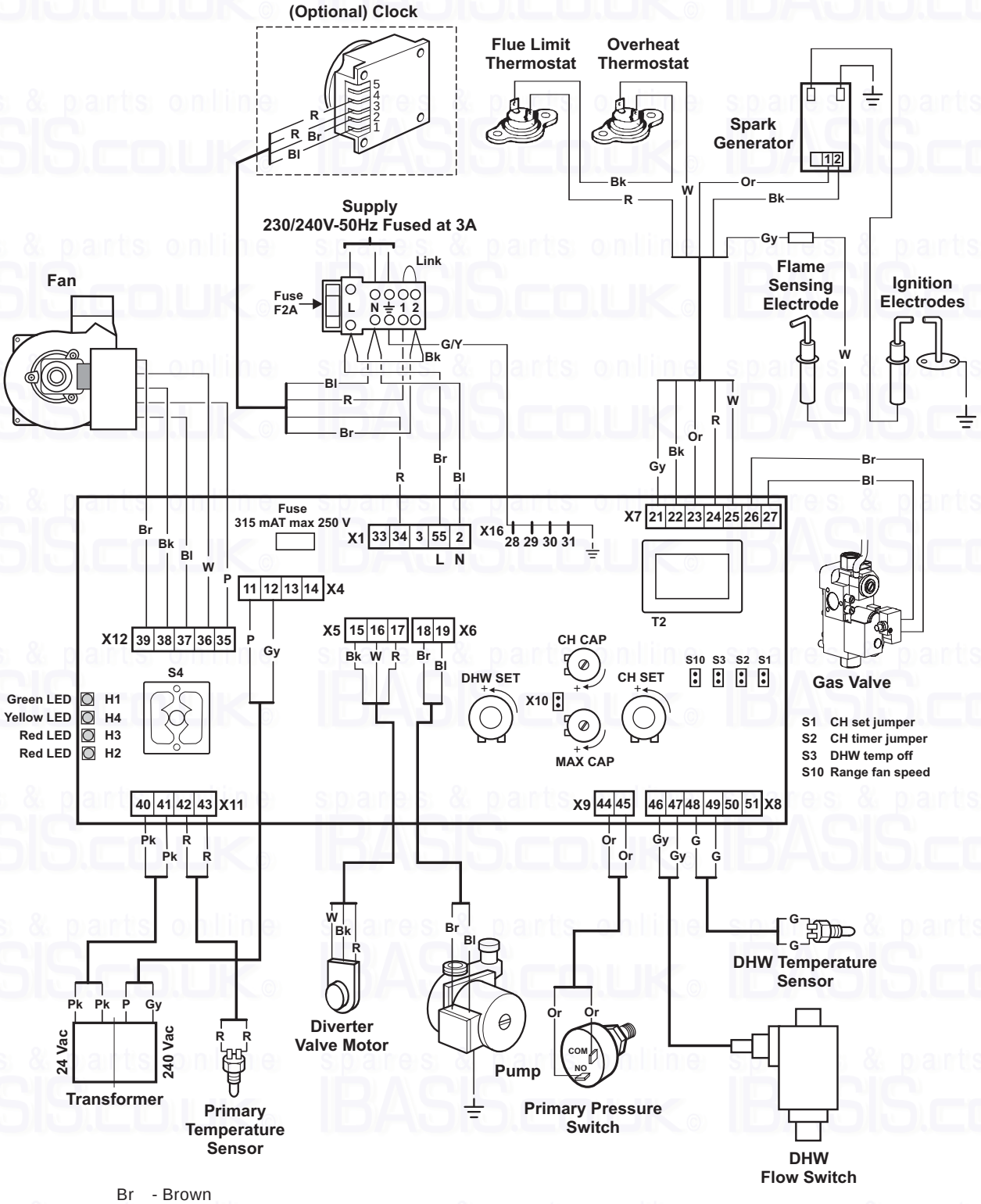

Br - Brown
Bk - Black
Bl - Blue
R - Red
Or - Orange
G - Green
G/Y - Green/Yellow
W - White
Gy - Grey
Pk - Pink
P - Purple

NOTE: TO CONNECT EXTERNAL CONTROL REMOVE LINK FROM TERMINALS 1 & 2 AND CONNECT 230/240 V SWITCHED LIVE TO TERMINAL1.

A FROST THERMOSTAT IS INCORPORATED WITHIN THE MAIN PCB

9.2 FUNCTIONAL FLOW WIRING DIAGRAM

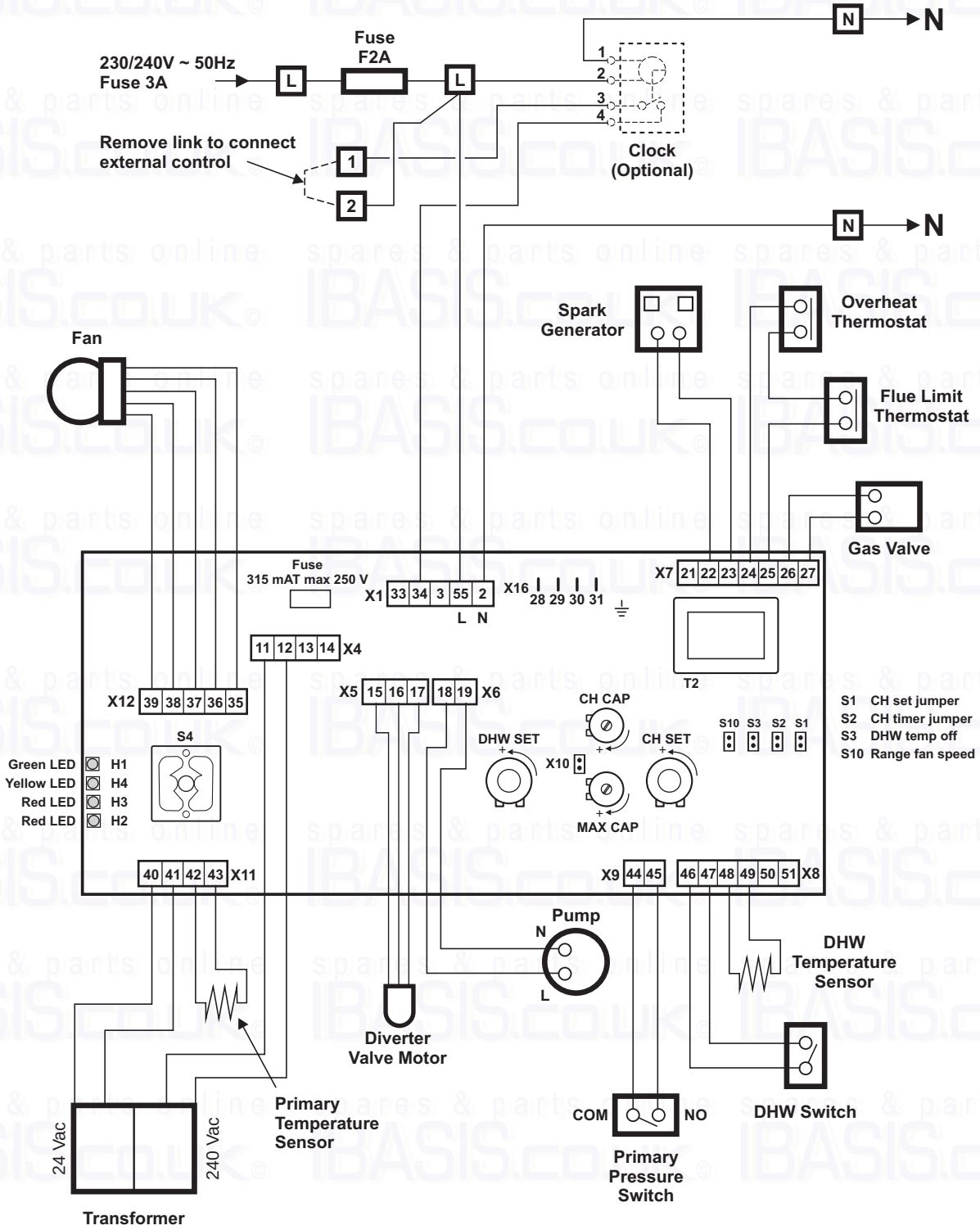

Note: ☐ Main Terminal Block

TO CONNECT EXTERNAL CONTROL REMOVE LINK FROM TERMINALS 1 AND 2 AND CONNECT 240 V SWITCHED LIVE TO TERMINAL 1.

10 FAULT FINDING

10.1 CARRY OUT INITIAL FAULT FINDING CHECKS

1. Check that gas, water and electrical supplies are available at the boiler.
   i.e. Inlet gas pressure = 20 mbar
   Electrical supply = 230/240 V ~ 50 Hz
   CH water system pressurised to between 0.75 and 1.25 bar
   DHW flow rate is more than 2.5 litre/min
2. Carry out electrical system checks, i.e. Earth Continuity, Resistance to Earth, Short Circuit and Polarity with a suitable meter.
   Note: These checks must be repeated after any servicing or fault finding.
3. Ensure all external controls are calling for heat and check all external and internal fuses.
4. Check that the gas and water pipework has been connected to the correct connections on the boiler and all valves are open.

However, before any servicing or replacement of parts ensure the gas and electrical supplies are isolated.

10.2 CENTRAL HEATING - Follow operational sequence

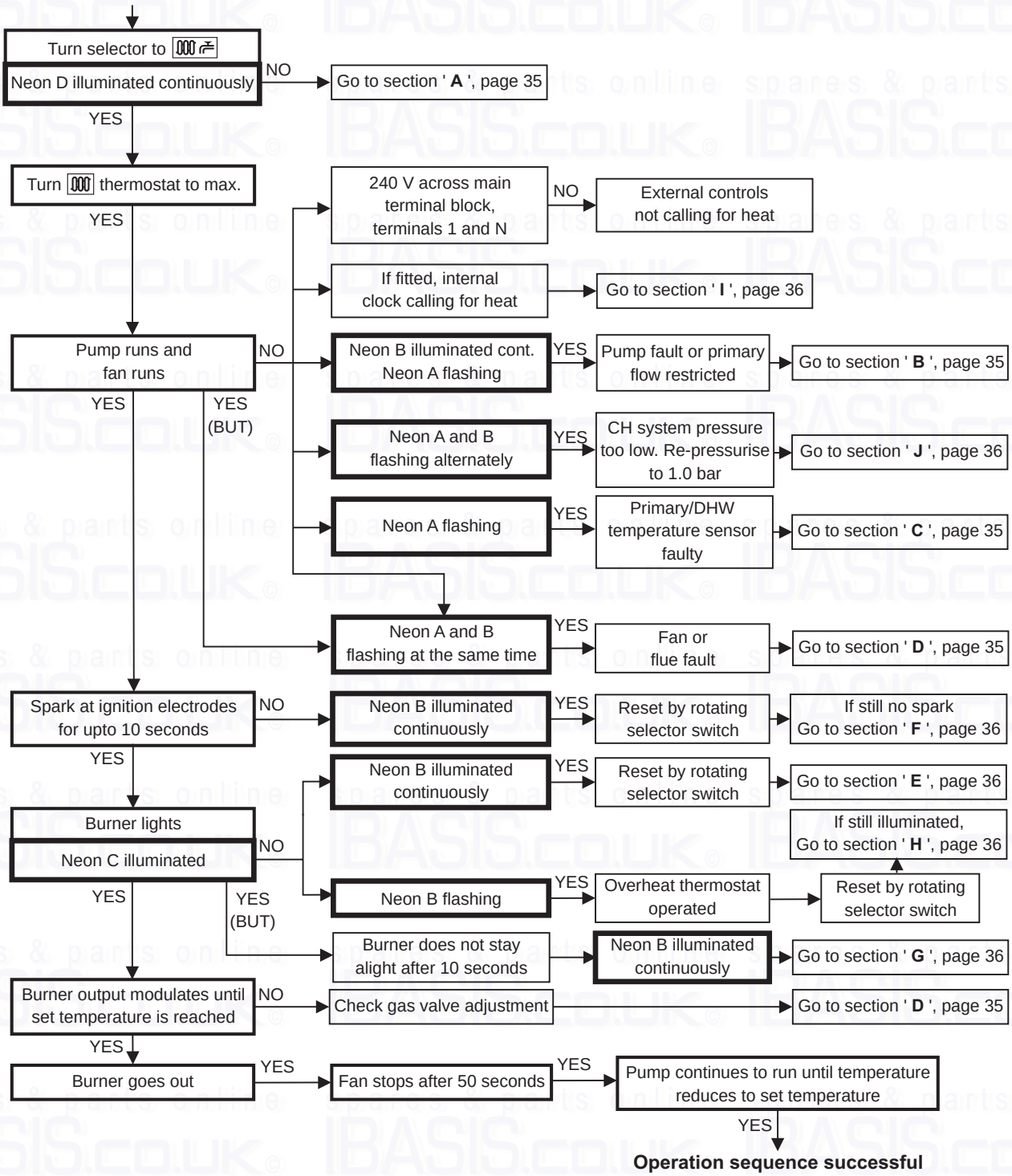

10.3 DOMESTIC HOT WATER- Follow operational sequence

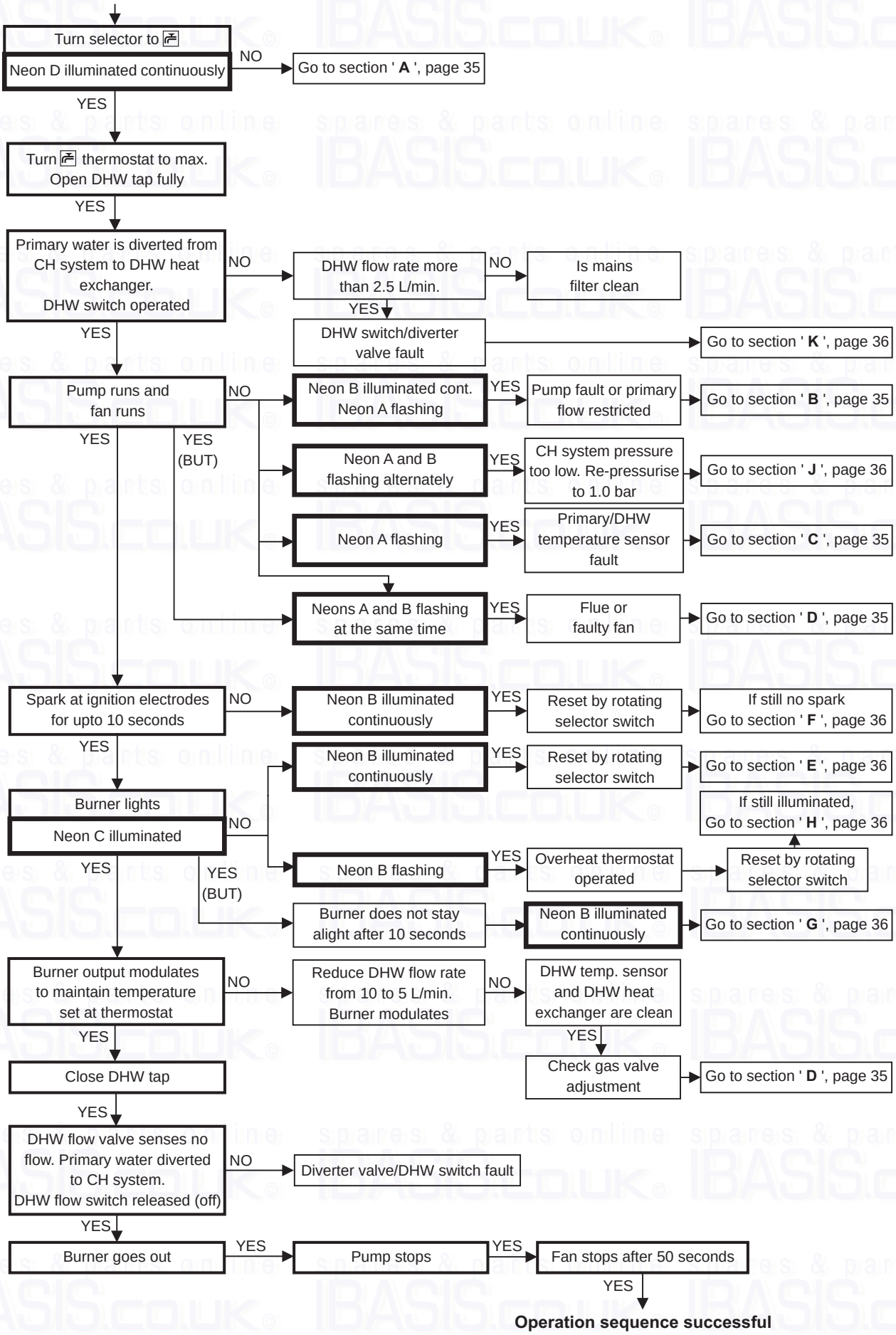

10.4 FAULT FINDING SOLUTIONS A to D

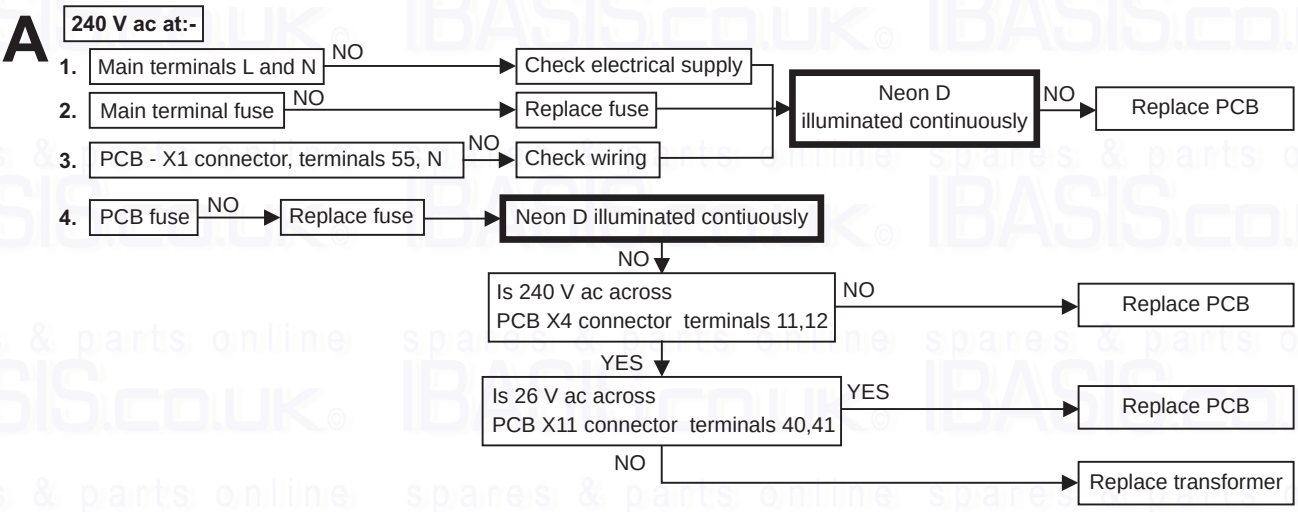

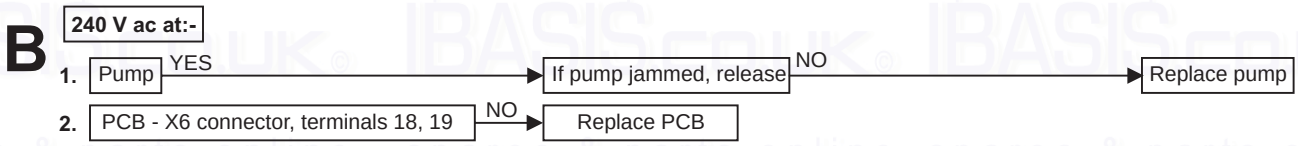

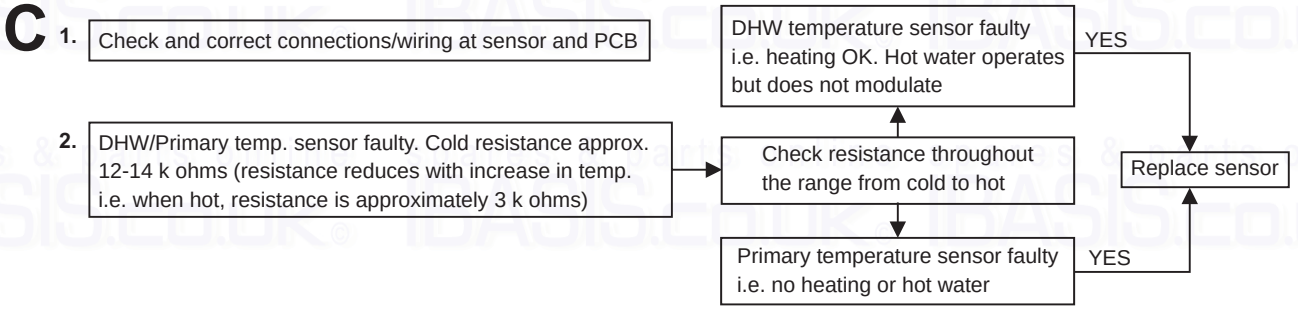

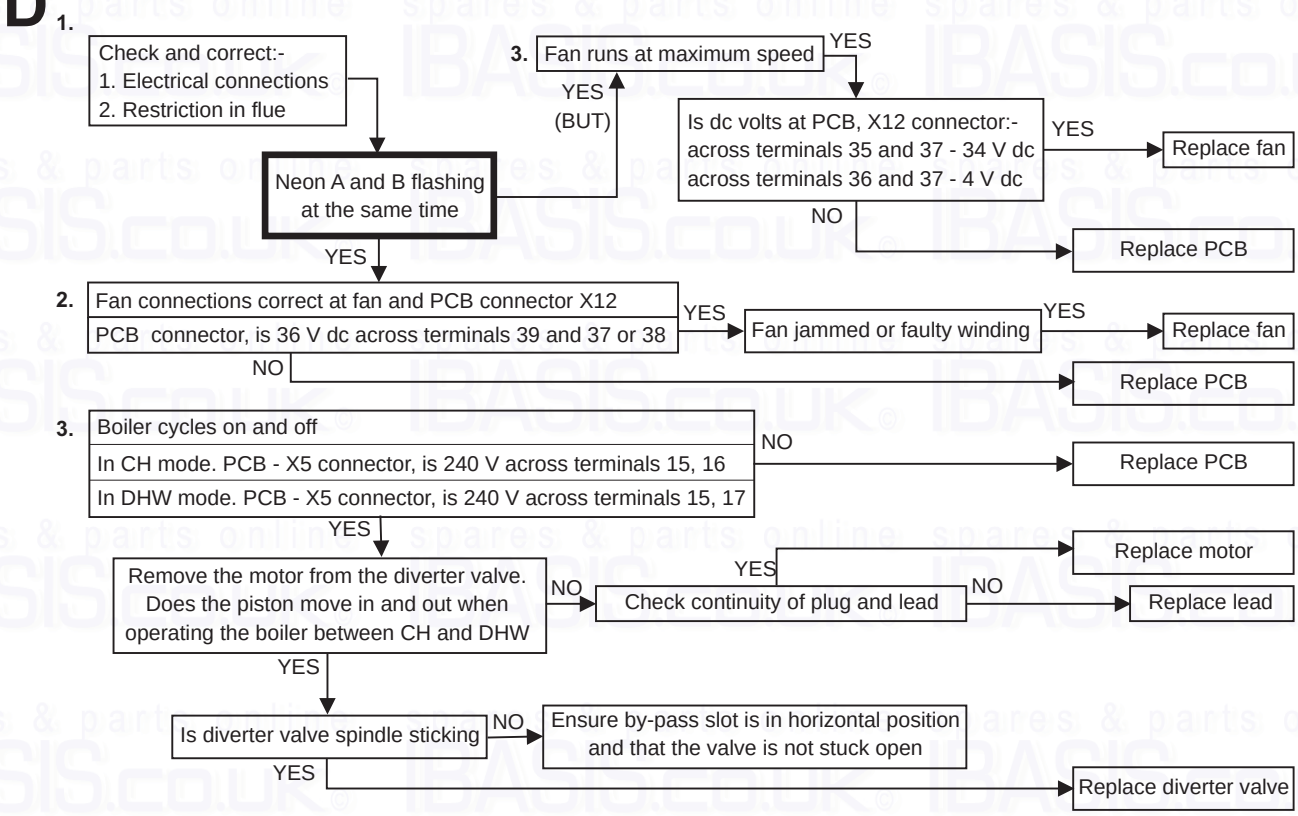

10.5 FAULT FINDING SOLUTIONS E to K

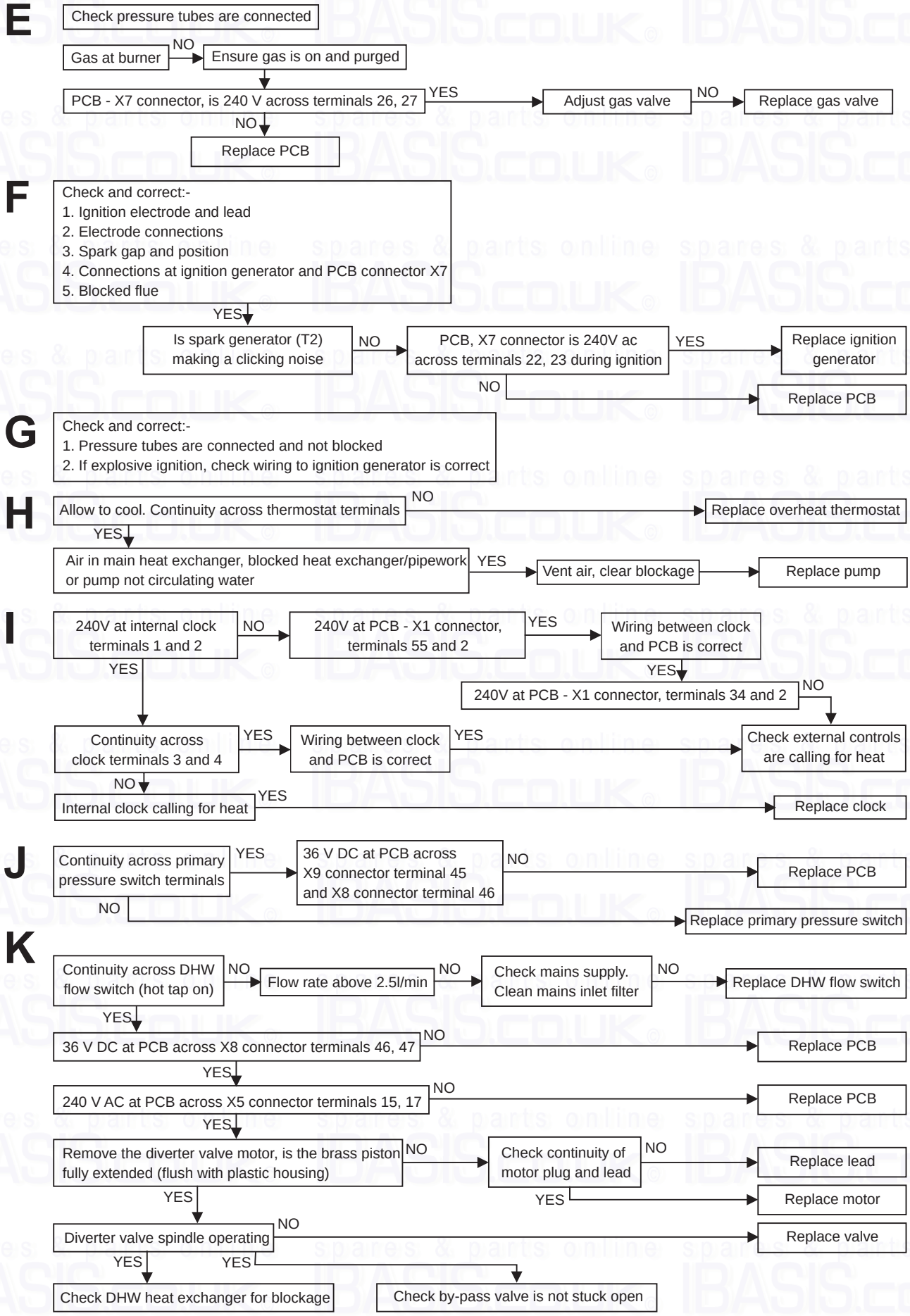

11 SHORT PARTS LIST

Reference	Description	Qty.	Alpha Pt. No.	British Gas GC No.
Fig. 30	Burner - CD25	1	1.023999	H50-442
Fig. 30	Burner - CD28	1	1.019622	H50-443
Fig. 30	Burner - CD35	1	1.023979	H50-444
Fig. 2, item 30	Main injector 5.2 mm - CD25	1	1.024374	H50-445
Fig. 2, item 30	Main injector 5.4 mm - CD28	1	1.024388	H50-446
Fig. 2, item 30	Main injector 8.5 mm - CD35	1	1.024391	H50-447
Fig. 34	Primary heat exchanger - CD25	1	1.023638	H50-448
Fig. 34	Primary heat exchanger - CD28	1	1.023564	H50-449
Fig. 34	Primary heat exchanger - CD35	1	1.023674	H50-450
Fig. 2, item 6	DHW heat exchanger - CD25	1	1.022220	H50-451
Fig. 2, item 6	DHW heat exchanger - CD28	1	1.022221	H50-452
Fig. 2, item 6	DHW heat exchanger - CD35	1	1.022222	H50-453
Fig. 28	Gas valve	1	1.023673	H50-454
Fig. 35	Pump	1	1.024097	H50-455
Fig. 31	Fan assembly	1	1.029719	H28-396
Fig. 35	Primary pressure switch	1	1.018320	E76-320
Fig. 33	DHW flow switch	1	1.020831	H50-457
Fig. 32	PCB	1	1.029813	H50-458
Fig. 31	Flue thermostat	1	1.016870	E93-872
Fig. 31	Ignition generator	1	1.018162	E94-414
Fig. 31	Transformer	1	1.019189	H50-460
Figs. 31 and 35	Temperature sensor	2	1.021762	798-413
Fig. 23	Fuse F2A	1	1.6098	E76-378
Fig. 32	PCB fuse F315mA	1	1.013931	E96-571
Fig. 31	Overheat thermostat 100°C	1	1.012067	E94-413
Fig. 2, item 14	Expansion vessel 8 Litre	1	1.023560	H50-462
Fig. 35	Pressure relief valve 3 bar	1	1.023565	H50-463
Fig. 35	Automatic air vent	1	1.022102	H50-464
Fig. 35	Pressure gauge	1	1.023551	H50-465
Fig. 31	Ignition electrode and lead	1	3.018304	H50-466
Fig. 31	Ignition electrode	1	1.016779	H01-887
Fig. 31	Flame sensing electrode and lead	1	1.019293	E96-572
Fig. 33	Diverter valve motor assembly	1	1.018064	H50-469
Fig. 33	Diverter valve assembly	1	3.015562	H50-472
Fig. 2, item 27	By-pass assembly	1	3.017174	H50-474
Fig. 30	Combustion chamber insulation panel front	1	1.014732	E94-420
Fig. 2, item 29	Condensate trap	1	3.017281	H50-476

12 benchmark CHECKLIST

Ensure the following is completed after the boiler has been installed and commissioned:-

BOILER SERIAL No. ..... NOTIFICATION No. .....

***CONTROLS** To comply with the Building Regulations, each section must have a tick in one or other of the boxes*

Time & temperature control to heating	room t/stat & programmer/timer	☐	Programmable roomstat	☐
Time & temperature control to hot water	cylinder t/stat & programmer/timer	☐	Combi boiler	☐
Heating zone valves	Fitted	☐	Not required	☐
Hot water zone valves	Fitted	☐	Not required	☐
Thermostatic radiator valves	Fitted	☐		
Automatic by-pass to system	Fitted	☐	Not required	☐

FOR ALL BOILERS CONFIRM THE FOLLOWING:

The system has been flushed in accordance with the boiler manufacturer's instructions? ☐ Yes ☐ No

The system cleaner used .....

The inhibitor used .....

FOR CENTRAL HEATING MODE, MEASURE AND RECORD THE FOLLOWING:

Gas rate	☐	m^3/hr	☐	ft^3/hr
Burner operating differential pressure (if applicable)	☐	N/A	☐	mbar
Central heating flow temperature			☐	°C
Central heating return temperature			☐	°C

FOR COMBINATION BOILERS ONLY

Has a water scale reducer been fitted? ☐ Yes ☐ No

What type of scale reducer has been fitted? .....

FOR DOMESTIC HOT WATER MODE, MEASURE AND RECORD THE FOLLOWING:

Gas rate	☐	m^3/hr	☐	ft^3/hr
Maximum burner operating differential pressure (if applicable)	☐	N/A	☐	mbar
Cold water inlet temperature			☐	°C
Hot water outlet temperature			☐	°C
Water flow rate			☐	lts/min

FOR CONDENSING BOILERS ONLY CONFIRM THE FOLLOWING:

The condensate drain has been installed in accordance with the manufacturer's instructions? ☐ Yes

FOR ALL INSTALLATIONS CONFIRM THE FOLLOWING:

The heating and hot water system complies with current Building Regulations ☐ Yes

The appliance and associated equipment has been installed and commissioned in accordance with the manufacturer's instructions ☐ Yes

If required by the manufacturer, have you recorded a CO/CO_2 ratio reading ☐ N/A ☐ Yes ☐ CO/CO_2 ratio

The operation of the appliance and system controls have been demonstrated to the customer ☐ Yes

The manufacturer's literature has been left with the customer ☐ Yes

COMMISSIONING ENG'S NAME:

Print ..... Gas Safe ID No. .....

Sign ..... Date .....

13 SERVICE RECORD

It is recommended that your heating system is serviced regularly and that you complete the appropriate Service Interval Record below.

Service Provider: Before completing the appropriate Service Interval Record below, please ensure you have carried out the service as described in this instruction manual. Always use the manufacturer's specified spare parts when replacing all controls.

SERVICE 1: Date .....
Engineers name .....
Company name .....
Telephone No. .....
Gas Safe ID card serial No. .....
CO/CO_2 Initial ratio ..... Final ratio .....
Faults/Repairs carried out .....
.....
.....
Engineers signature .....

SERVICE 2: Date .....
Engineers name .....
Company name .....
Telephone No. .....
Gas Safe ID card serial No. .....
CO/CO_2 Initial ratio ..... Final ratio .....
Faults/Repairs carried out .....
.....
.....
Engineers signature .....

SERVICE 3: Date .....
Engineers name .....
Company name .....
Telephone No. .....
Gas Safe ID card serial No. .....
CO/CO_2 Initial ratio ..... Final ratio .....
Faults/Repairs carried out .....
.....
.....
Engineers signature .....

SERVICE 4: Date .....
Engineers name .....
Company name .....
Telephone No. .....
Gas Safe ID card serial No. .....
CO/CO_2 Initial ratio ..... Final ratio .....
Faults/Repairs carried out .....
.....
.....
Engineers signature .....

SERVICE 5: Date .....
Engineers name .....
Company name .....
Telephone No. .....
Gas Safe ID card serial No. .....
CO/CO_2 Initial ratio ..... Final ratio .....
Faults/Repairs carried out .....
.....
.....
Engineers signature .....

Engineers name .....
Company name .....
Telephone No. .....
Gas Safe ID card serial No. .....
CO/CO_2 Initial ratio ..... Final ratio .....
Faults/Repairs carried out .....
.....
.....
Engineers signature .....

SERVICE 7: Date .....
Engineers name .....
Company name .....
Telephone No. .....
Gas Safe ID card serial No. .....
CO/CO_2 Initial ratio ..... Final ratio .....
Faults/Repairs carried out .....
.....
.....
Engineers signature .....

SERVICE 8: Date .....
Engineers name .....
Company name .....
Telephone No. .....
Gas Safe ID card serial No. .....
CO/CO_2 Initial ratio ..... Final ratio .....
Faults/Repairs carried out .....
.....
.....
Engineers signature .....

SERVICE 9: Date .....
Engineers name .....
Company name .....
Telephone No. .....
Gas Safe ID card serial No. .....
CO/CO_2 Initial ratio ..... Final ratio .....
Faults/Repairs carried out .....
.....
.....
Engineers signature .....

SERVICE 10: Date .....
Engineers name .....
Company name .....
Telephone No. .....
Gas Safe ID card serial No. .....
CO/CO_2 Initial ratio ..... Final ratio .....
Faults/Repairs carried out .....
.....
.....
Engineers signature .....

Alpha
HEATING INNOVATION
Alpha Therm Limited.
Nepicar House, London Road, Wrotham Heath,
Sevenoaks, Kent TN15 7RS
Tel: 0844 8718764
email: info@alpha-innovation.co.uk
website:www.alpha-innovation.co.uk

These instructions have been carefully prepared but we reserve the right to alter the specification at any time in the interest of product improvement.
© Alpha Therm Limited 2010.

Part No. 1.024380

Manual compiled and designed by Publications 2000 - Tel: (01670) 356211

07/10/D252