Installation and Servicing Instructions

Alpha CD50S and 70S

Wall Mounted, Fan Assisted, Gas Fired, High Efficiency Condensing System Boilers

For Technical help or for Service call ...

ALPHA HELPLINE

Tel: 0870 3001964

Alpha

HEATING INNOVATION

Nepicar House, London Road,
Wrotham Heath, Sevenoaks,
Kent TN15 7RS

CE 0051

benchmark

For use with Natural Gas or Propane Gas (LPG)

Leave these instructions with the User

spares & parts online IBASIS.CO.UK

CONTENTS

1 Introduction 2
2 Technical data 3
3 General boiler information 8
4 Installation 15
5 Commissioning 19
6 Routine servicing 24
7 Wiring diagram 29
8 Fault finding 30
9 Short parts list 31
10 Benchmark Checklist 32
11 Service record 33

1 INTRODUCTION

The Alpha CD50S and 70S are wall mounted high efficiency condensing, fan assisted system boilers. The burner is lit electronically and the heat output is controlled by a modulating fan and gas valve.

These are system boilers providing heating only for sealed central heating systems. However, they may be used with an open central heating system if required - refer to Section 3.8.

The boilers are supplied with type B23 flue configuration (open chamber and forced draught) but can be changed to type C (room sealed) by using a kit.

The boilers are fitted with a pump, 4 bar pressure relief valve and pressure gauge fully assembled and tested. They are designed for use with a fully pumped, sealed and pressurised central heating system. If used with an open system refer to Section 3.8.

The CD50S boiler is suitable for central heating loads of between 10 and 53.8 kW (34 121 and 183 700 Btu/h).
The CD70S boiler is suitable for central heating loads of between 18.1 and 72.8 kw (61 800 and 248 600 Btu/h).
The boilers can be supplied for use with Natural gas or Propane Gas (LPG).

Note: There are a number of additional controls and accessories available for use with the boilers to enable cascade and zone installations to be used. Further information is available from Alpha Therm Ltd.

IMPORTANT

It is the law that all gas appliances are installed by a competent person, ie CORGI registered personnel, in accordance with the following recommendations:-

Current Gas Safety (Installation and Use) Regulations

All current Building Regulations issued by the Department of the Environment, i.e. Approved Document L1.

Building Standards (Scotland) (Consolidation) Regulations issued by the Scottish Development Department

UK Water Regulations/Byelaws (Scotland)

Health & Safety Document No. 635 (The Electricity At Work Regulations 1989)

The installation should also be in accordance with the following British Standard Codes of Practice:-

BS 5440:1:2000	Flues
BS 5449:1990	Forced circulation hot water systems
BS 5546:2000	Installation of hot water supplies for domestic purposes
BS 6700:1997	Design, installation, testing and maintenance of services supplying water
BS 6798:2000	Installation of gas fired hot water boilers
BS 6891:1998	Gas installation
BS 7593:1992	Code of Practice for treatment of water in heating systems
BS 7671:2001	Requirements for electrical installations, IEE Wiring Regulations

Reference should be made to DEFRA document 'Guide to condensing boiler installation assessment procedures for dwellings'.

If installation is in a timber framed building, refer to the Institute of Gas Engineers document IGE/UP/7.

This appliance meets the requirements of IPX5D, ie degree of protection against moisture.

This appliance contains no asbestos and no substances have been used in the construction process that contravene the COSHH Regulations (Control of Substances Hazardous to Health).

Failure to install this appliance correctly could lead to prosecution. It is in your own interest and that of safety to ensure that the law is complied with.

Manufacturer's instructions must **NOT** be taken in anyway as over-riding statutory obligations.

Notes:
1. Ensure that the Benchmark Checklist has been completed after the boiler has been installed and commissioned.
2. It is the law that all boiler installations are registered by the installer through the CORGI Gas Work Notification Scheme.
3. The boiler must only be used with the flue components supplied with the boiler.

Propane Gas (LPG) - In addition to the regulations and requirements stated, the boiler **must be** installed in accordance with BS 5482:1 - The Installation of Propane Burning Appliances in Permanent Dwellings.

2 TECHNICAL DATA

2.1 PERFORMANCE

NATURAL GAS (CAT: I2H 2H - G20 - 20 mbar)

Alpha CD50S

Central Heating		MAX.	MIN.
Heat Input (H_s)	kW	56.4	11.5
(Gross)	Btu/h	192 400	39 250
Heat Input (H_i)	kW	50.8	10.4
(Net)	Btu/h	173 300	35 500
Heat Output (H_s condensing)	kW	53.8	11.1
(50°C/30°C)	Btu/h	183 700	37 800
Heat Output (H_i non-condensing)	kW	50.0	10.0
(80°C/60°C)	Btu/h	170 600	34 120
Fan Speed	rpm	5 180	1 280
Gas Rate	m³/h	5.37	1.10
	ft³/h	189.6	38.8

Alpha CD70S

Central Heating		MAX.	MIN.
Heat Input (H_s)	kW	77.5	20.5
(Gross)	Btu/h	264 300	70 060
Heat Input (H_i)	kW	69.8	18.5
(Net)	Btu/h	238 200	63 120
Heat Output (H_s condensing)	kW	72.8	19.7
(50°C/30°C)	Btu/h	248 600	67 100
Heat Output (H_i non-condensing)	kW	67.9	18.1
(80°C/60°C)	Btu/h	231 700	61 800
Fan Speed	rpm	5 240	1 400
Gas Rate	m³/h	7.4	1.96
	ft³/h	261.2	69.2

PROPANE GAS (CAT I3P 3P - G31 - 37 mbar)

Alpha CD50S

Central Heating		MAX.	MIN.
Heat Input (H_s)	kW	56.4	11.5
(Gross)	Btu/h	192 400	39 250
Heat Input (H_i)	kW	50.8	10.4
(Net)	Btu/h	173 300	35 500
Heat Output (H_s condensing)	kW	53.8	11.1
(50°C/30°C)	Btu/h	183 700	37 800
Heat Output (H_i non-condensing)	kW	50.0	10.0
(80°C/60°C)	Btu/h	170 600	34 120
Fan Speed	rpm	5 200	1 250
Gas Rate	m³/h	2.15	0.44
	ft³/h	75.9	15.5

Alpha CD70S

Central Heating		MAX.	MIN.
Heat Input (H_s)	kW	77.5	20.5
(Gross)	Btu/h	264 300	70 060
Heat Input (H_i)	kW	69.8	18.5
(Net)	Btu/h	238 200	63 120
Heat Output (H_s condensing)	kW	72.8	19.7
(50°C/30°C)	Btu/h	248 600	67 100
Heat Output (H_i non-condensing)	kW	67.9	18.1
(80°C/60°C)	Btu/h	231 700	61 800
Fan Speed	rpm	5 240	1 450
Gas Rate	m³/h	2.96	0.78
	ft³/h	104.5	27.7

Note: The above appliances are fully modulating and are **not** range rated.

2.2 SYSTEM

Central Heating (Sealed System)	
Max. Working System Pressure	3.5 bar
Min. System Pressure	0.5 bar
Max. System temperature	82°C
Pressure Relief Valve Setting	4 bar (58.8 PSI)
Flow Connection	1½" BSP
Return Connection	1½" BSP
Relief Valve Connection	¾" BSP
Recommended System Pressure (cold)	1.0 bar
CH Water Temp. (Approx. max.)	82°C (180°F)

2.3 COMPONENTS

Burner		Stainless steel
Main Heat Exchanger		Stainless steel
Main Burner Injector	CD50S NG	7.85 mm
	CD70S NG	13.0 mm
	CD50S LPG	5.7 mm
	CD70S LPG	7.8 mm
Concentric Flue Outer Duct		125 mm dia.
Concentric Flue Inner Duct		80 mm dia.
Open Flue Single Flue Pipe		80 mm dia.

2.4 ELECTRICAL

Supply	230/240 V ~ 50 Hz
External Fuse	3 A
Power Consumption	180 W
Internal Fuse - Main Terminal	F2A
PCB Fuse F1	T2A
PCB Fuse F3	T4A
Electrode Spark Gap	3 to 4 mm
Electrical Enclosure Degree of Moisture Protection	IPX5D

2.5 INSTALLATION

Min. Clearances for Servicing (from casing)	Top	350 mm
	Bottom	250 mm
	Sides	10 mm
	Front	450 mm
Flue Diameter	Open Flue	80 mm
	Concentric Flue	125 mm
Flue Protruding Outside	Open Flue	80 mm
	Concentric Flue	180 mm
Hole For Flue Assy.	Open Flue	100 mm dia.
	Concentric Flue	127 mm dia.
Lift Weight	CD50S	63 kg
	CD70S	68 kg

2.6 GENERAL

Case Dimensions	Height	950 mm
	Width	600 mm
	Depth	525 mm
Gas Connection		28 mm
Water Content	CD50S	3.7 L
	CD70S	4.0 L

2.7 PERFORMANCE DATA

Boiler model	%CO_2 content (± 0.2%)				Sedbuk rating	
	Natural Gas		(LPG) Propane Gas		Efficiency	NOx class
	Min	CH Max	Min	CH Max	band	
CD50S	9.25	9.30	10.1	10.6	A	5
CD70S	9.00	9.25	9.7	10.5	A	5

2.8 FLUE LENGTHS - See also Section 3.4

Open flue - Maximum horizontal or vertical flue with single 80 mm dia. open flue is 30 metre

90° bend is equivalent to 2.1 m of flue length

45° bend is equivalent to 1.3 m of flue length

Vertical terminal is equivalent to 3 m of flue length

Concentric flue - Maximum horizontal flue is 14 metre, maximum vertical flue is 18 metre

90° bend is equivalent to 1.9 m of flue length

45° bend is equivalent to 1.4 m of flue length

Vertical terminal is equivalent to 3.4 m of flue length

Notes: **1.** Ensure all flues slope downwards towards the boiler by a minimum of 25 to 30 mm per metre of flue.

2. It is recommended that horizontal and vertical flue assemblies should be supported approximately every 1.5 m with access provided to the joints.

2.9 AVAILABLE PUMP HEAD FOR CENTRAL HEATING

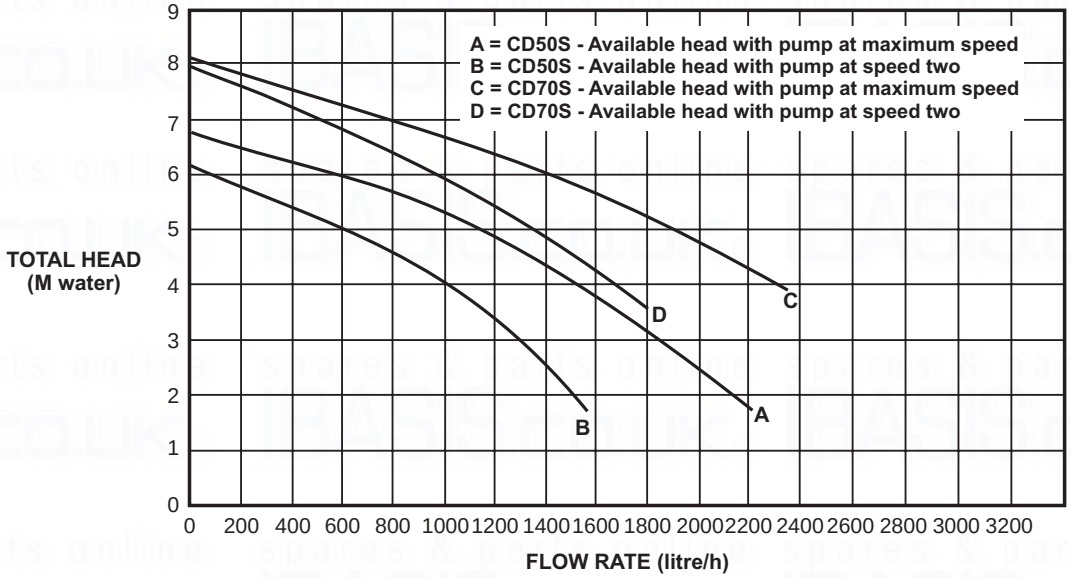

Fig. 1

2.10 ELECTRICAL CONNECTIONS

Note: This Appliance Must Be Earthed

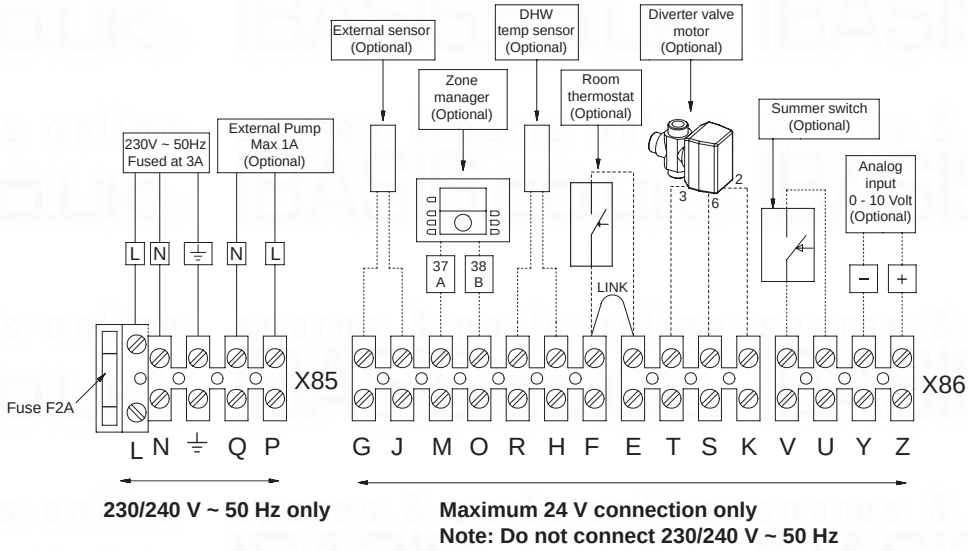

Fig. 2

2.11 BOILER SCHEMATIC - CD50S

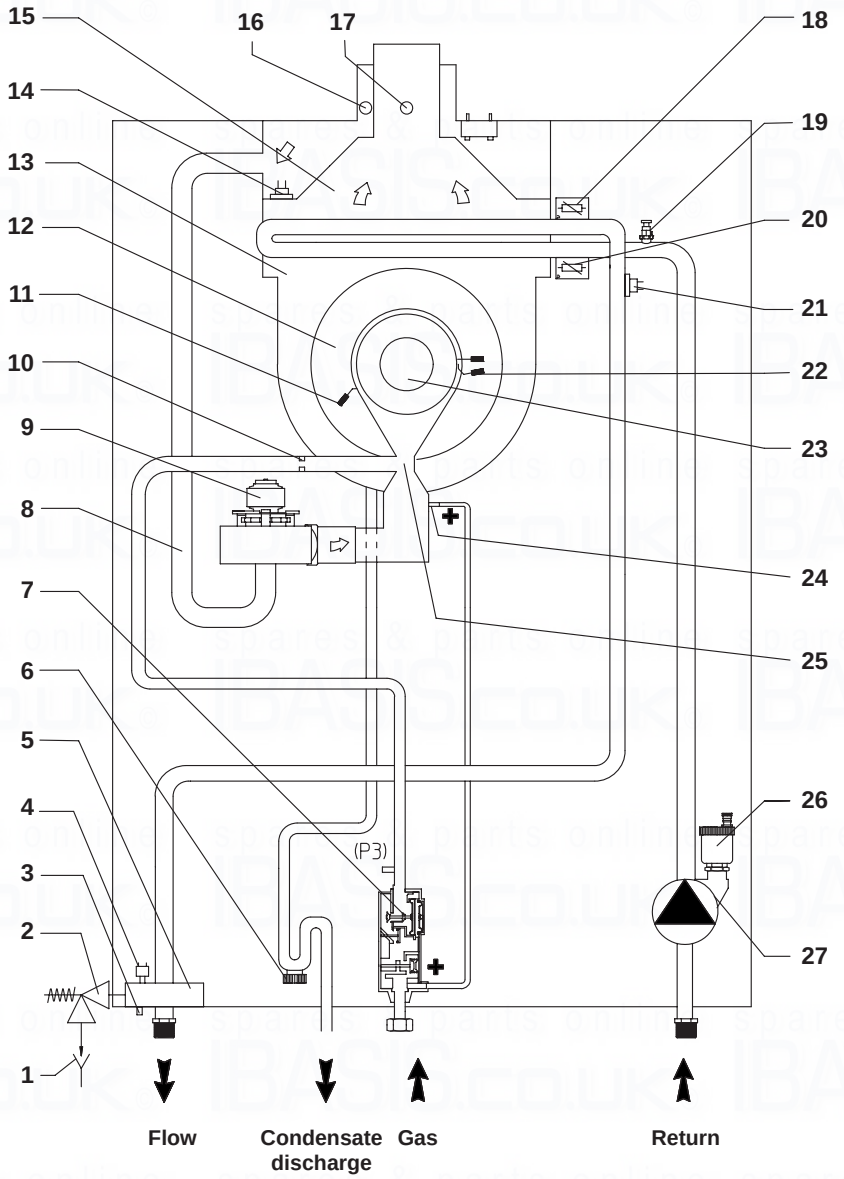

1	Tundish	15	Flue hood
2	Pressure relief valve (4 bar)	16	Air inlet sampling point
3	Drain point	17	Flue sampling point
4	Primary pressure switch	18	Primary flow temperature sensor
5	Flow manifold	19	Air vent - manual
6	Condensate trap	20	Primary return temperature sensor
7	Gas valve	21	Overheat thermostat
8	Air inlet pipe	22	Ignition electrodes
9	Fan	23	Burner
10	Injector	24	Venturi positive point (P1)
11	Flame sensing electrode	25	Venturi
12	Combustion chamber cover	26	Automatic air vent
13	Heat exchanger	27	Pump
14	Flue overheat thermostat		

Fig. 3 - CD50S

2.12 BOILER SCHEMATIC - CD70S

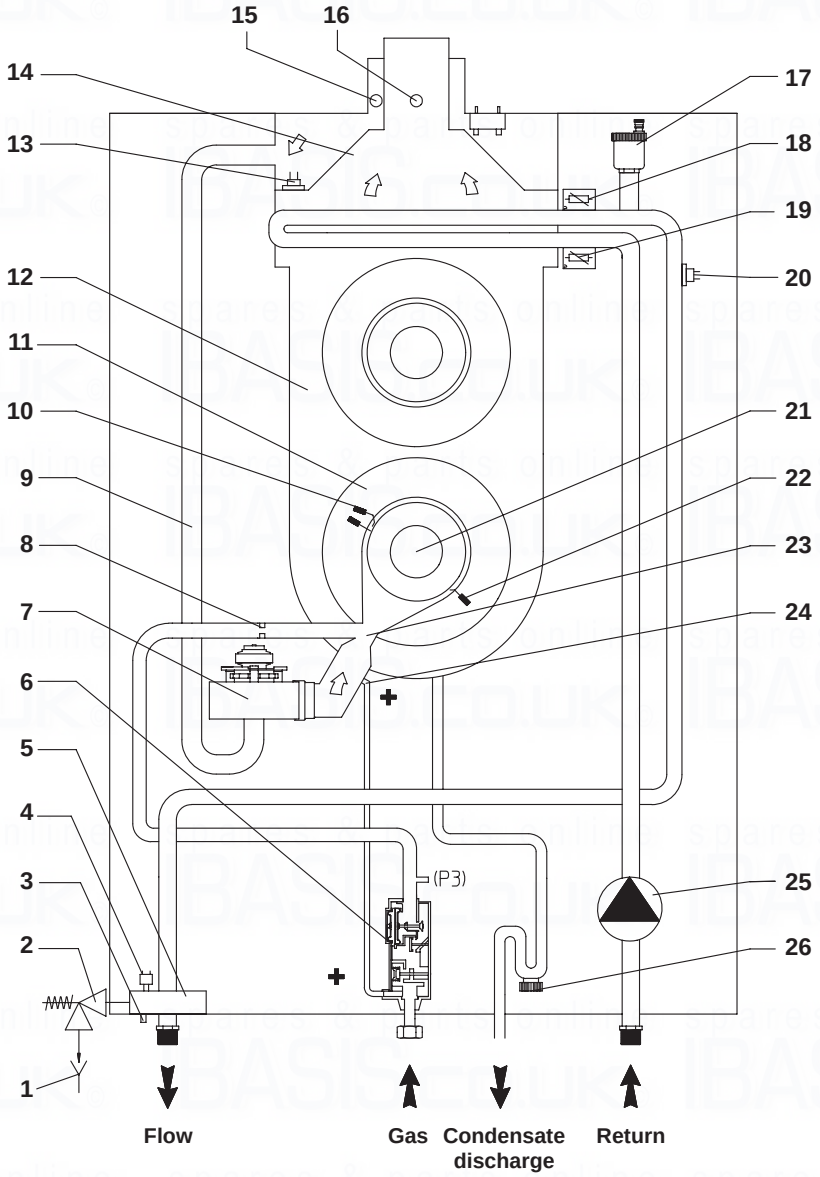

1	Tundish	14	Flue hood
2	Pressure relief valve (4 bar)	15	Air inlet sampling point
3	Drain point	16	Flue sampling point
4	Primary pressure switch	17	Automatic air vent
5	Flow manifold	18	Primary flow temperature sensor
6	Gas valve	19	Primary return temperature sensor
7	Fan	20	Overheat thermostat
8	Injector	21	Burner
9	Air inlet pipe	22	Flame sensing electrode
10	Ignition electrodes	23	Venturi
11	Combustion chamber cover	24	Venturi positive point (P1)
12	Hear exchanger	25	Pump
13	Flue overheat thermostat	26	Condensate trap

Fig. 4 - CD70S

3 GENERAL BOILER INFORMATION

3.1 GAS SUPPLY

Natural Gas:

The Alpha CD50S boiler requires a gas rate of 5.37 m³/h (189.6 ft³/h).
The Alpha CD70S boiler requires a gas rate of 7.4 m³/h (261.2 ft³/h).

Propane Gas (LPG):

The Alpha CD50S boiler requires a gas rate of 3.94 kg/h (8.4 lb/h) or 7.6 litres/h of liquid gas.
The Alpha CD70S boiler requires a gas rate of 5.42 kg/h (11.6 lb/h) or 10.4 litres/h of liquid gas.

The local Propane Gas supplier should be consulted, at the installation planning stage, in order to establish the availability of an adequate supply of gas.

The meter and supply pipes must be capable of delivering this quantity of gas in addition to the demand from any other appliances. The boiler requires at least a 28 mm gas supply pipe and ensure the inlet supply pressure is at least 20 mbar for Natural Gas or 37 mbar for Propane Gas (LPG).

The complete installation, including the meter, must be tested for gas tightness and purged as described in BS 6891.

3.2 ELECTRICAL SUPPLY

The boiler requires a 230/240 V ~ 50 Hz mains supply, fused at 3 A

Note: The boiler must be earthed.

There must only be one common isolator, providing complete electrical isolation, for the boiler and any external controls.

This boiler has been fitted with a supply cable, however, if it is necessary to fit a cable use PVC insulated cable not less than 0.75 mm² (24 x 0.2 mm) to BS 6500 Table 16. The boiler should be connected to a fused three pin plug and unswitched shuttered socket outlet (both complying with BS 1363), or a fused double pole switch with a contact separation of at least 3 mm in both poles.

Wiring external to the boiler must be in accordance with the current IEE Wiring Regulations (BS 7671).

3.3 AIR SUPPLY

Open flued (Type B23 flue)

Alpha CD50S and CD70S boilers leave the factory with 'B23' type configuration (open chamber and forced draught - single flue pipe) and receive the air for combustion from openings in the rear of the boiler, therefore air supply for combustion and ventilation must be provided in accordance with BS5440:2.

1. **If the boiler is installed in a room -** The room must have a permanent air vent either direct to the outside air or to an adjacent room which itself has a permanent air vent to the outside air. The minimum effective air vent(s) required is:

   Alpha CD50S: 220 cm² Alpha CD70S 315 cm²

2. **If the boiler is installed in a cupboard or compartment -** Permanent air vents are required in the cupboard or compartment, one at high level and one at low level, either direct to the outside air or to a room. Both the high and low level air vents must communicate with the same room or must be on the same wall to outside air. The minimum effective areas required are given in Table 1.

   Where the cupboard or compartment is ventilated to a room, the room itself must have an effective air vent direct to outside air of minimum effective area as given above in paragraph 1.

Boiler model		CD50S	CD70S
Vents to outside air	High level	255 cm²	350 cm²
	Low level	510 cm²	700 cm²
Vents into a room	High level	510 cm²	700 cm²
	Low level	1020 cm²	1400 cm²

Table 1

Room sealed (Type C flue)

If the boilers are converted to a 'C' type configuration (sealed chamber and forced draught - concentric flue pipe) as described in Section 3.4 only air for ventilation is required.

1. **If the boiler is installed in a room -** No air vents are required in the room in which the boiler is installed.
2. **If the boiler is installed in a cupboard or compartment -** Permanent air vents for ventilation are required in the cupboard or compartment, one at high level and one at low level, either direct to the outside air or to a room. Both the high and low level air vents must communicate with the same room or must be on the same wall to outside air. Both the high and low level vent must each have a free area as follows. The free area of each vent may be halved if the ventilation is provided directly from outside.

   Alpha CD50S: 510 cm² Alpha CD70S 700 cm²

The minimum clearances for servicing must always be maintained.

3.4 FLUE SYSTEM

The flue system must be installed in accordance with BS 5440:1.

For horizontal flues ensure the flue assembly slopes downwards towards the boiler by a minimum of 25 - 30 mm per metre of flue.

It is recommended that horizontal and vertical flue assemblies should be supported approximately every 1.5 m with access provided to the joints.

Alpha CD50S and CD70S boilers leave the factory with 'B23' type flue configuration (open chamber and forced draught - single flue pipe). To change the configuration to 'C' type (sealed chamber and forced draught - concentric flue pipe), remove the 80 mm dia. adapter, the bracket and gasket from the top of the boiler and fit the concentric flue adaptor, see Section 4.5.

Note: **1.** Under no circumstances must the flue length (including allowances for extra bends) exceed the maximum flue lengths stated for each type of flue.

2. Failure to use the correct Alpha flue components with the boiler will invalidate the boilers CE approval, guarantee and may be unsafe.

Seals for flue elements - If lubrication of components (already performed by the manufacturer) is not sufficient, remove the residual lubricant using a dry cloth, then to ease fitting apply a small amount of common or industrial talc to the seal.

Ensure that the seals are correctly located in the elbows and extensions as shown in Fig. 5.

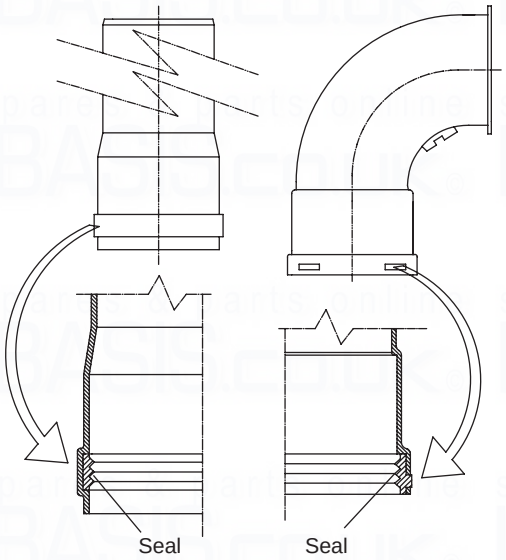

Fig. 5

Flue components are available as follows:-

Open flue - 80 mm dia. single pipe

Horizontal terminal kit 80 mm dia. (includes 1 m straight with terminal, one 90° bend and two collars)

Vertical terminal kit 80 mm dia.

Extension pipe 1 m x 80 mm dia.

90° bend 80 mm dia.

45° bend 80 mm dia.

Concentric flue - 80/125 mm dia.

Horizontal terminal kit 80/125 mm dia. (includes 1 m straight with terminal, one 90° bend, two collars and adaptor)

Vertical terminal kit 80/125 mm dia. (includes adaptor)

Extension kit 1 m x 80/125 mm dia.

90° bend 80/125 mm dia.

45° bend 80/125 mm dia.

3.4.1 Horizontal Flue Options

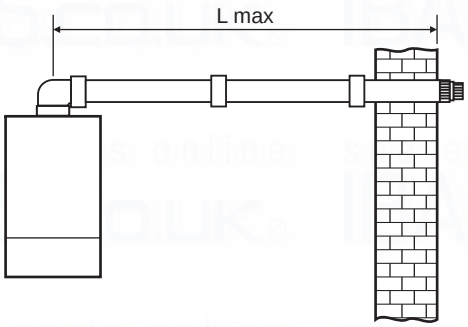

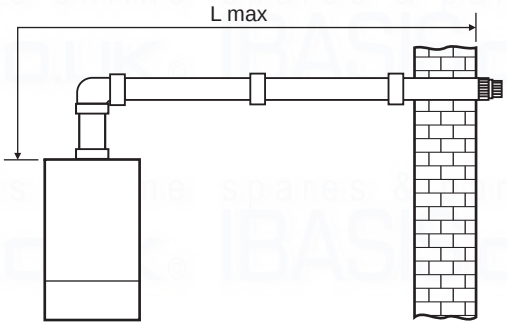

Open flue: 80 mm dia. single pipe Lmax = 30 m
90° bend is equivalent to 2.1 m of flue length
45° bend is equivalent to 1.3 m of flue length

Concentric flue: 80/125 mm dia. Lmax = 14 m
90° bend is equivalent to 1.9 m of flue length
45° bend is equivalent to 1.4 m of flue length

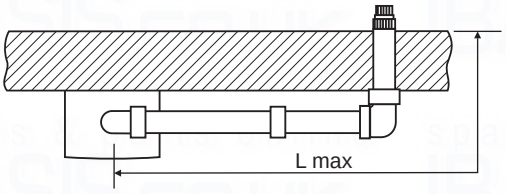

Open flue: 80 mm dia. single pipe Lmax = 27.9 m

Concentric flue: 80/125 mm dia. Lmax = 12.1 m

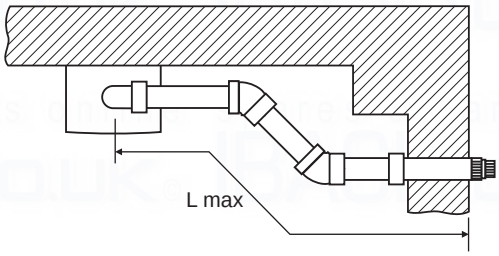

Open flue: 80 mm dia. single pipe Lmax = 27.4 m

Concentric flue: 80/125 mm dia. Lmax = 11.2 m

Fig. 6 - Horizontal flues

3.4.2 Vertical Flue Options

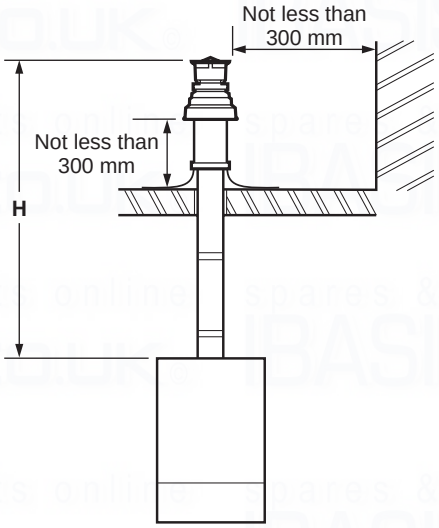

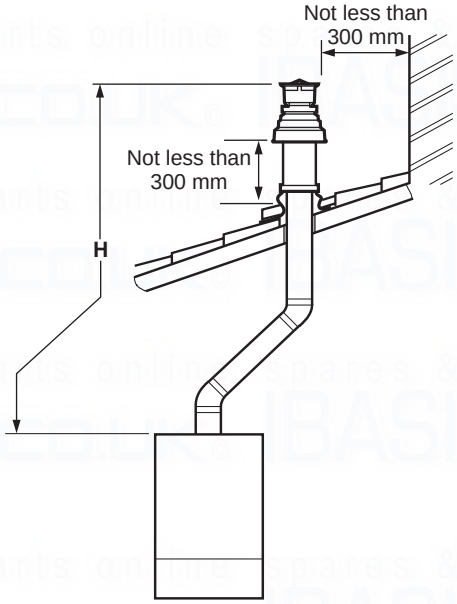

Open flue: 80 mm dia. single pipe Hmax = 30 m
Concentric flue: 80/125 mm dia. Hmax = 18 m

Open flue: 80 mm dia. single pipe Hmax = 27.4 m
Concentric flue: 80/125 mm dia. Hmax = 15.2 m

Fig. 7 - Vertical flues

3.5 FLUE TERMINAL LOCATION - Fig. 8

Note: In certain weather conditions the terminal will emit a plume of steam. If possible avoid positioning the terminal where this may cause a nuisance, i.e. positions A, D, G, H, J or M.

The flue terminal must be exposed to the external air and the position must allow the free passage of air across it at all times.

A terminal must not be sited below 2.1 m where people have access to, such as public footpaths, access routes, patios etc. However, If the terminal is fitted less than 2.1 m above a surface where there is no public access, the terminal must be protected by a terminal guard. A suitable guard is available from Alpha Therm Ltd.

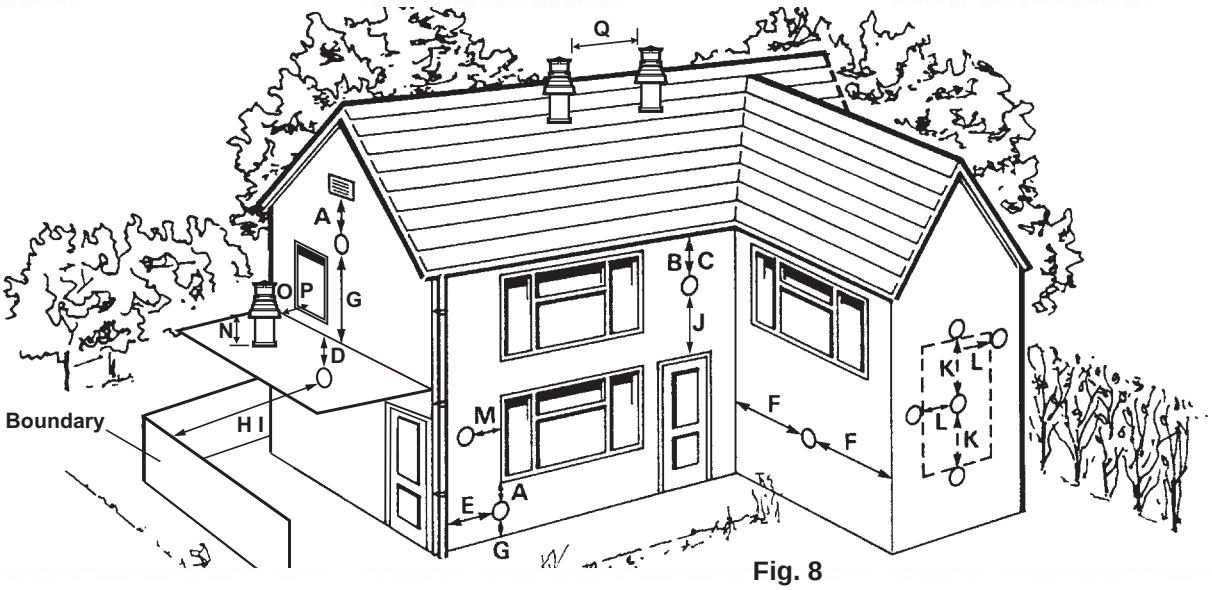

Fig. 8

	Terminal position	Min. distance (mm)
A	Directly below an opening, air brick, windows, etc.	300 (See Note 1)
B	Below gutters, soil pipes or drain pipes	75 (See Note 3)
C	Below eaves	200 (See Note 3)
D	Below balconies	200 (See Note 3)
E	From a vertical drain pipe or soil pipe	150 (See Note 3)
F	From an internal or external corner	300 (See Note 2)
G	Above ground, roof or balcony level	300
H	From a surface or boundary facing the terminal	600 (See Note 4)
I	From a terminal facing the terminal	1200 mm
J	Above an opening, air brick, window etc.	300 (See Note 1)
K	Vertically from a terminal on the same wall	1500 mm
L	Horizontally from a terminal on the same wall	300 mm
M	Horizontally from an opening, air brick, window etc.	300 mm (See Note 1)
N	Minimum protrusion through a roof	300 mm
O	From a vertical obstruction	300 mm
P	From an openable window	600 mm
Q	From an adjacent vertical terminal	600 mm

Notes:
1. In addition, the terminal should not be nearer than 150 mm to the framework of an opening into the buiding, i.e. a window surround or door surround.
2. This clearance may be reduced to 25 mm without effecting the performance of the boiler. However, to ensure the condensate plume does not affect adjacent surfaces a clearance of 300 mm is preferable.
3. These clearances may be reduced to 25 mm without effecting the performance of the boiler. However, to ensure the condensate plume does not affect adjacent surfaces the terminal can be extended beyond gutters, pipes, eaves, balconies etc. by upto 500 mm. If the flue is extended more than 500 mm outside, it should be boxed and insulated.
4. To reduce the possibility of nuisance to neighbouring buildings etc. it is recommended the terminal shouild not be less than 2500 mm from car parking spaces, building boundary walls, fences etc.

Note: A terminal must not be sited under a car port roof

3.6 BOILER LOCATION

The boiler is not suitable for external installation unless it is installed within a purpose designed weatherproof building.

The boiler must be installed on a flat vertical wall which is capable of supporting the weight of the boiler. The boiler can be fitted to or adjacent to a wall comprising of a combustible material without the need for a special thermal insulation barrier.

If the boiler is to be fitted in a timber framed building, it should be fitted in accordance with the Institute of Gas Engineers 'Guide for Gas Installations in Timber Frame Housing', reference IGE/UP/7.

The boiler may be installed in any room or internal space, although particular attention is drawn to the requirements of the current IEE Wiring (BS7671) Regulations, and in Scotland, the electrical provisions of the Building Regulations applicable in Scotland, with respect to the installation of the boiler in a room or internal space containing a bath or shower. Where a room-sealed boiler is installed in a room containing a bath or shower, it must not be possible for a person using the bath or shower to touch any electrical switch or boiler control utilising mains electricity.

The boiler may be installed in a cupboard or compartment, provided it is correctly designed for that purpose, i.e. complies with the Building Regulations and the requirements of BS 6798.

Propane Gas (LPG): Installation pipes, cylinders and pressure regulators should be fitted in accordance with BS 5482:1. Bulk tank installation must comply with the requirements of the Home Office code of practice for the storage of liquefied petroleum gas at fixed installations. The boiler **must not** be installed in a room or internal space below ground level, e.g. in a basement or cellar, except where at least one side is open to ground level.

3.7 FROST PROTECTION

The boiler is fitted with a frost thermostat that activates the pump and burner when the system water temperature in the boiler falls below 3°C.

The electrical supply to the boiler must be left on for the thermostat to operate and the selector switch must be set to ON .

3.8 CENTRAL HEATING SYSTEM - Fig. 9

The boiler is designed for use in a sealed central heating system in accordance with the requirements of BS 5449 and BS 6798.

The system should be designed to operate with flow temperatures of up to 82°C. When designing the system, the pump head, expansion vessel size, mean radiator temperature, etc. must all be taken into account. Refer to the pump performance graph for guidelines (see Fig. 1).

However, if the boiler is to be used with an open central heating system refer to Fig. 9 and use a barrier heat exchanger (i.e. separates the boiler primary circuit from the open heating circuit). This will also ensure the boiler heat exchanger is protected from an old/dirty system.

Sealed system volume - An expansion vessel **is not** incorporated into the boiler. An expansion vessel **must be** fitted in the position shown in Fig. 9. To check correct operation of the expansion vessel the system pressure should not be more than 3.5 bar when the system is at maximum operating temperature (for further guidance refer to BS 7074:1), For example an 8 litre expansion vessel is suitable for a sealed system of 80 litres.

The boiler is supplied with the following components built in:-

Pressure relief valve - complying with BS 6759 and set to operate at 4 bar. The discharge pipe must be routed clear of the boiler and terminated in such a manner that it can be seen, but cannot cause injury to persons or property.

Pressure gauge - To indicate the system pressure to be maintained.

By-pass - The boiler has no built-in by-pass, therefore an automatic by-pass is required for the system.

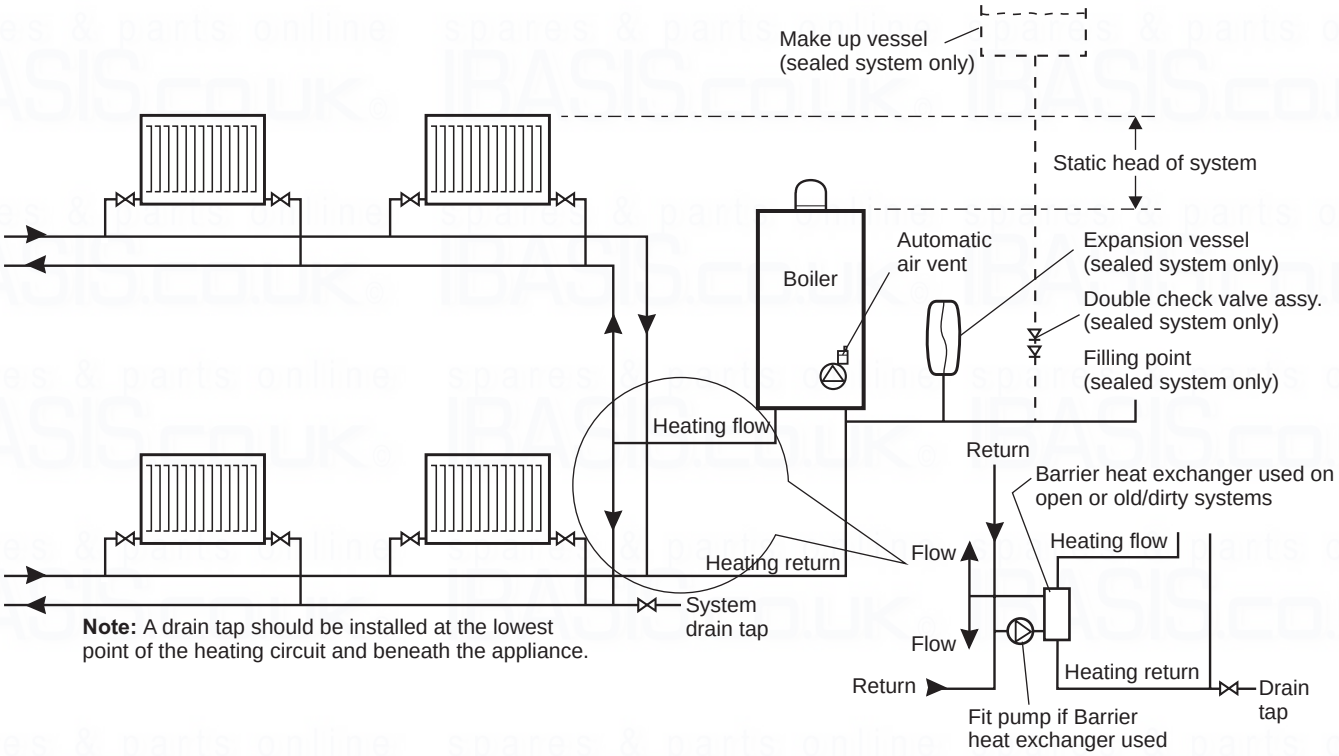

Fig. 9

Installation on a low temperature heating system.

The boiler can directly feed a low temperature system, varying the maximum delivery temperature of the boiler and setting a value of between 20 and 85°C. To vary the boiler maximum delivery temperature, modify the boiler maximum delivery temperature of parameter No. 4 as described in Section 5.8 and Table 6.

In this mode it is advisable to include a safety limit thermostat set at 55°C in series with the boiler circulating pump. The thermostat must be positioned in the system flow pipe at more than 2 metres from the boiler.

3.9 FILLING THE SEALED CENTRAL HEATING SYSTEM - Figs. 10, 11

The system design pressure (cold) should be set to 1.0 bar. This pressure is equivalent to a static head (see Fig. 9) of 10.2 metres of water.

Provision should be made to replace water lost from the system. This can be by manual or automatic means, as shown in Figs. 10 and 11. The position for connecting an automatic make-up vessel is indicated in Fig. 9. A double check valve assembly must be used, as shown in Fig. 11.

Filling of the system must be carried out in a manner approved by the local Water Undertaking. Where allowed, the system may be filled via a temporary connection as shown in Fig. 10. After filling, always disconnect the flexible hose of the filling loop.

All fittings used in the system must be able to withstand pressures up to 4 bar.

Drain taps (to BS 2879) must be used to allow the system to be completely drained.

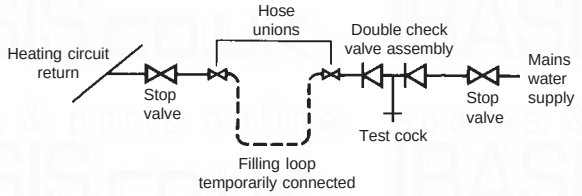

Fig. 10

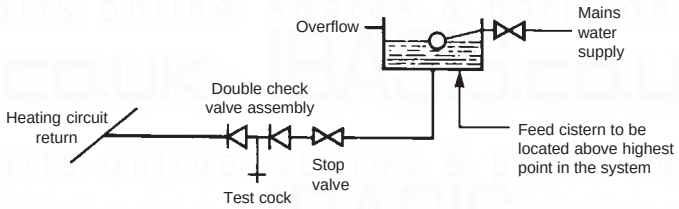

Fig. 11

3.10 FLUSHING THE HEATING SYSTEM

It is essential that the central heating system is thoroughly cleaned and flushed when fitting an Alpha CD50S or CD70S boiler. Failure to do so will invalidate the warranty. If this is difficult because the system is old/dirty refer to Section 3.8, Fig. 9 gives consideration to using a barrier heat exchanger.

The primary condensing heat exchanger is constructed in stainless steel and therefore is compatible with most materials used in a heating system.

If a cleaning agent and inhibitor are used, they must be applied in accordance with their manufacturers instructions. Only products from Fernox and Sentinel are acceptable for use with the Alpha CD50S or CD70S boilers. Further information can be obtained from Fernox (Tel: 0179 9521133) or Sentinel (Tel: 0151 4209563).

The system should be flushed in accordance with BS 7593 and BS 5449. The following procedures are recommended:

1. Installing onto a new system:-
   a. Fill the system, vent at high points, at pump and radiators.
   b. Check for leaks.
   c. Rapidly drain the system.
   d. If required, chemically clean the system as instructed by the recommended cleaner manufacturer.
      Note: Ensure that the system is flushed to remove any remains of the cleaner.
   e. If chemical cleaner is not used to clean the system:-
      i) Refill the system.
      ii) Switch on the boiler and allow the system to heat up to the normal operating temperature.
      iii) Rapidly drain the system while the water is still hot.
      iv) Refill the system.
   f. As required, add the recommended inhibitor to the system as instructed by the inhibitor manufacturer.
   g. Recheck for leaks.
2. Installing onto an existing system, clean the system before fitting the new boiler:-
   a. If the old boiler is still working:-
      i) Switch on the boiler and allow the system to heat up to the normal operating temperature.
      ii) Rapidly drain the system while the water is still hot.
      iii) Refill and chemically clean the system as instructed by the recommended cleaner manufacturer.
      iv) Ensure the system is flushed to remove any remains of the cleaner.
      v) Fit the new boiler.
   b. If the old boiler is not working:-
      i) Rapidly drain the system.
      ii) Remove the old boiler.
      iii) Flush the system through.
      iv) Fit the new boiler.
      v) Refill and chemically clean the system as instructed by the recommended cleaner manufacturer.
      vi) Ensure the system is flushed to remove any remains of the cleaner.
   c. As required, add the recommended inhibitor to the system as instructed by the inhibitor manufacturer.
   d. Check for leaks.

3.11 DISPOSAL OF CONDENSATE

Provision must be made for the safe disposal of condensate produced by the flue gases of the Alpha CD50S or CD70S boilers and reference should be made to BS 6798: 2000 for the requirements on the disposal of condensate.

The boilers incorporate a condensate trap which has a seal of 75 mm, therefore no additional trap is required.

The condensate should ideally be discharged internally into an internal waste pipe (washing machine/sink waste) or soil pipe to avoid the possible risk of freezing. The pipework must be in 22 mm pipe.

External pipe runs should be avoided, but if it is necessary, the pipework should be at least 32 mm and protected from the risk of freezing with a waterproof insulation and the length should be kept to a maximum of 3 m. Termination should be into an external gulley or soakaway as shown in Figs. 12 and 13.

Note: All pipework must have a continuous fall (see Figs. 12 and 13) from the boiler and must be of an acid resistant material such as plastic waste pipe. (copper or steel is not suitable).

It should be noted that the connection of a condensate pipe to a drain may be subject to local building control requirements.

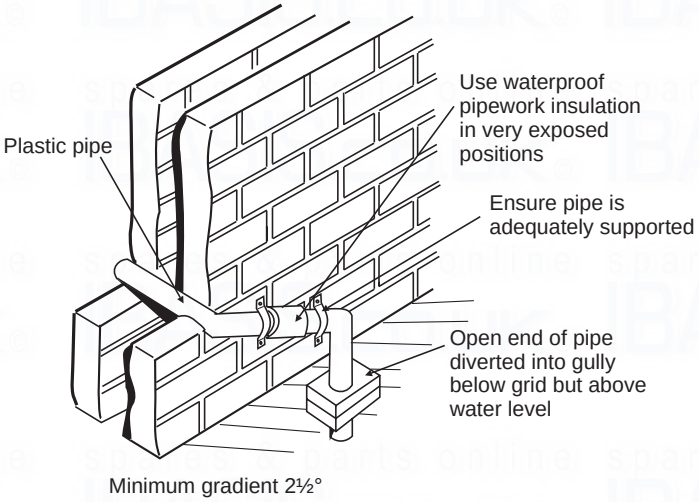

Fig. 12 - External gully

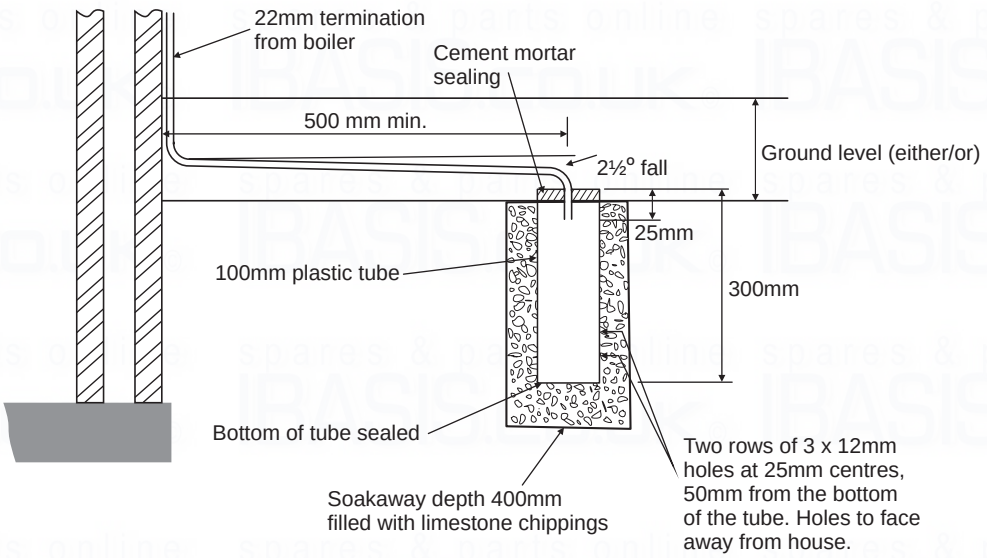

Fig. 13 - External soakaway

4 INSTALLATION

4.1 UNPACKING

1. The basic boiler is supplied in a single box, containing the following:-

   Cased boiler supplied with water connections and washers
   Mounting hooks and wall plugs
   Tundish for pressure relief valve outlet
   Condensate discharge pipe
   Gas service cock and 28 mm connection tail
   Literature pack and Wall template

   Other parts of the flue system are supplied in seperate packs as ordered.
2. Unpack boiler and remove the loose items.

4.2 DIMENSIONS and CONNECTIONS- Fig. 14

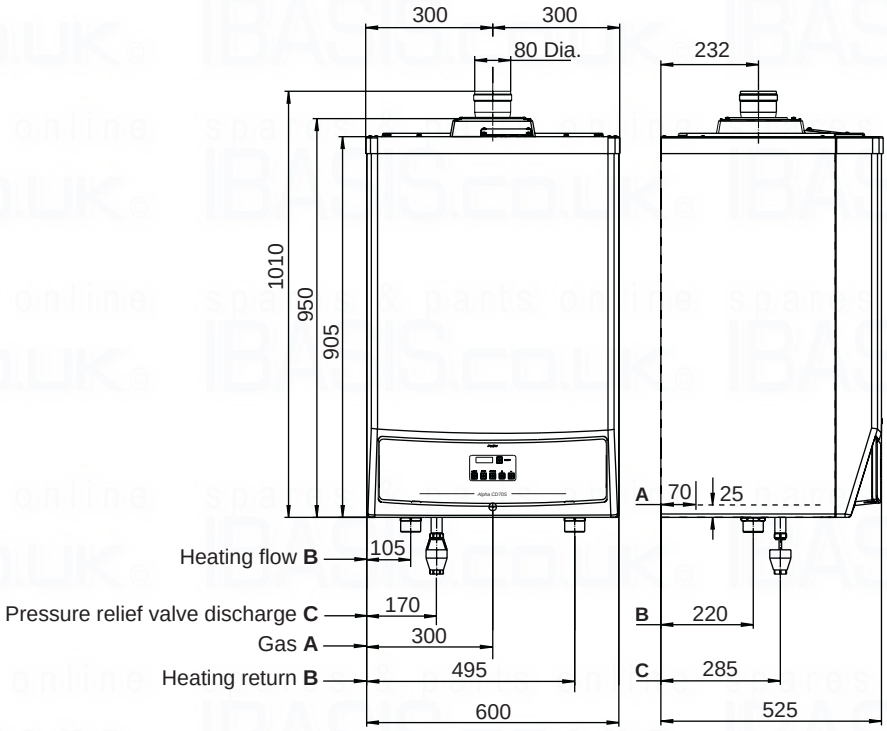

Fig. 14

4.3 PREPARE THE WALL - Fig. 15

1. Decide upon the position of the boiler taking into account the clearances required for servicing (refer to Section 2.5) and the flue terminal position.
2. Tape the template to the wall (ensure it is level and the right way up) and mark the position of the two holes for the boiler mounting hooks.
3. Drill the fixing holes (12 mm dia.) to accept the No.12 plugs supplied. Screw the boiler mounting hooks fully into the plugs.
4. Cut suitable holes in the wall/roof 100 mm dia for open flue 80 mm dia. pipe or 127 mm dia. for concentric flue. Use the centre line positions given on the flue template.
5. Lift the boiler and locate it on the mounting hooks.

Note: When handling or lifting always use safe techniques - keep your back straight, bend your knees, don't twist - move your feet, avoid bending forwards and sideways and keep the load as close to your body as possible.
Where possible transport the boiler using a sack truck or other suitable trolley.
Always grip the boiler firmly, and before lifting feel where the weight is concentrated to establish the centre of gravity, repositioning yourself as necessary.

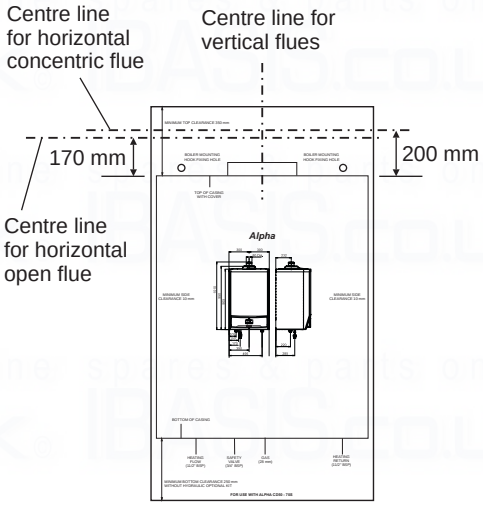

Fig. 15

4.4 CONNECT THE PIPEWORK - Fig. 14

1. Thoroughly flush out all the water pipework. Refer to Section 3.10.
2. Connect the system flow and return pipework to the boiler using suitable isolating valves.
   Note: Do not forget that the pressure relief valve discharge pipe must be routed clear of the boiler to a drain in such a manner that it may be seen, but cannot cause injury to persons or property.
3. Connect the 22 mm condensate trap drain pipe to the condensate discharge pipe using the clip supplied.
   Ensure that the condensate discharge pipe is as required in Section 3.11.
   Pour at least 0.5 litre of water into the flue duct, as shown in Fig. 16, and check the condensate discharge pipe for soundness
4. Ensure that all the valves are closed and do not turn on the water or gas supplies at this stage.

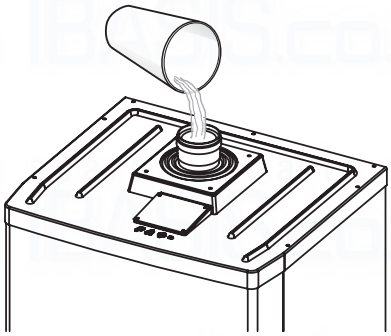

Fig. 16

4.5 'B23' TYPE SINGLE PIPE 80 mm FLUE KITS

Vertical kit - see Fig. 17 and 18, and refer to Section 3.4.

Fig. 17 shows the vertical flue kit parts.

To assemble the kit to the boiler - Slide the flue pipe down through the roof seal and place the seal over the flue duct. Push the flue duct into the flue socket on top of the boiler up to the stop. Ensure the seal is pushed in position against the ceiling.

The maximum vertical length (without bends) for flue pipe is 30 metres (see Fig. 17 and 18)

To install extensions or other flue components, proceed as follows: fit the male end of the pipe or elbow up to the stop on the female socket (with lip seals) of the previously installed component, this will ensure a secure fit and seal of the joints. Ensure all joints have the seal located correctly and the tape supplied is applied around each joint to ensure the flue ducts cannot be pulled apart.

It is recommended that the flue should be supported approximately every 1.5 m with access provided to the joints.

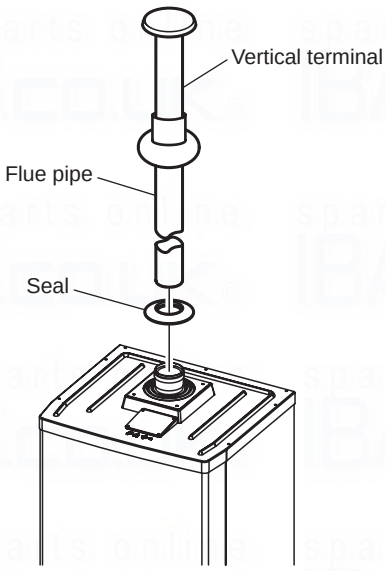

Fig. 17

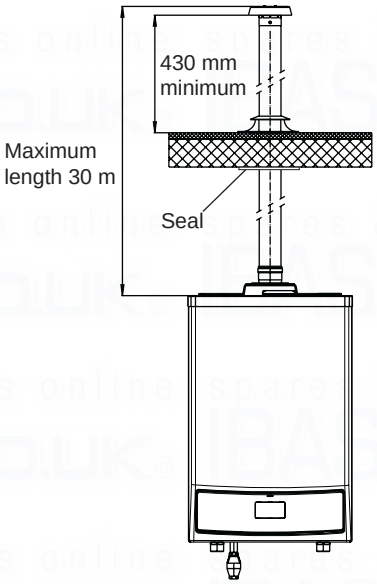

Fig. 18

Horizontal through the wall kit - see Fig. 19 and 20, and refer to Section 3.4.

Fig. 19 shows the horizontal through the wall kit parts.

To assemble the kit to the boiler - Fit the male end of the flue elbow into central flue outlet on the top of the boiler to the stop. Place the outer seal over the flue duct and slide it throught the wall from the outside. Place the inner seal over the flue duct then insert the duct into the elbow up to the stop. Slide the seals along the duct to seal it to the inside and outside of the wall.

To install extensions or other flue components, proceed as follows: fit the male end (smooth) of the pipe or elbow up to the stop on the female socket (with lip seals) of the previously installed component, this will ensure a secure fit and seal of the joints.

Extensions for flue kit - The maximum vertical/horizontal straight length (without flue bend) is 30 metres (refer to Section 3.4).

Note: To prevent condensate lying in the flue pipe, slope the pipe towards the boilers with a minimum slope of 2.5° - 3° (25 - 30 mm per metre). When installing the extensions, a wall/ceiling mounted clamp must be installed every 1.5 metres.

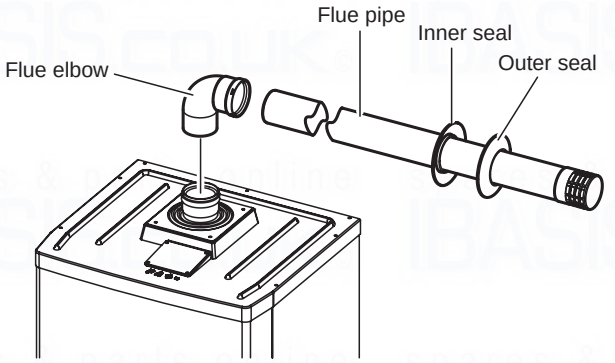

Fig. 19

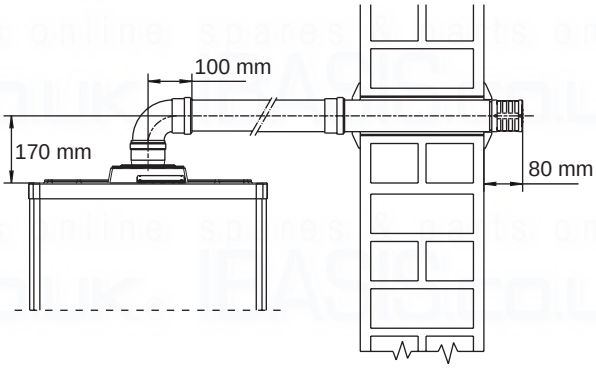

Note: Ensure the flue slopes downwards towards the boiler by a minimum of 25 to 30 mm per metre (2.5° - 3°)

Fig. 20

4.6 'C' TYPE CONCENTRIC FLUE KITS

Convert the boiler from the factory supplied 'B23' type configuration to 'C' type, i.e. room sealed concentric flue by removing the 80 mm dia. adaptor and four screws securing the fixing plate and gasket from the top of the boiler.

Horizontal through the wall concentric flue kit - see Fig. 21 and 22.

Fig. 21 shows the flue kit parts that need to be fitted to the boiler to ensure the room sealed concentric flue can be used.

To assemble the kit to the boiler - Fit the adapter into the central flue outlet on the top of the boiler up to the stop. Slide the square gasket over the adapter up to the groove, then fix it to the cover by means of the previously removed fixing plate and four screws. Fit the male end of the flue elbow up to the stop on the adapter. Place the outer seal over the concentric flue pipe and slide it throught the wall from the outside. Place the inner seal over the concentric flue pipe then insert the pipe into the elbow up to the stop. Slide the seals along the duct to seal it to the inside and outside of the wall.

To install extensions or other flue components, proceed as follows: fit the male end (smooth) of the concentric pipe or concentric elbow up to the stop on the female socket (with lip seals) of the previously installed component, this will ensure a secure fit and seal of the joints.

Extensions for horizontal kit - The horizontal kit can be extended up to a maximum horizontal distance of 14 metres (Fig. 22), including the flue terminal and excluding the flue bend on the boiler (refer to Section 3.4).

Note: To prevent condensate lying in the flue pipe, slope the pipe towards the boilers with a minimum slope of 3° (25 - 30 mm per metre). When installing the extensions, a wall/ceiling mounted clamp must be installed every 1.5 metres.

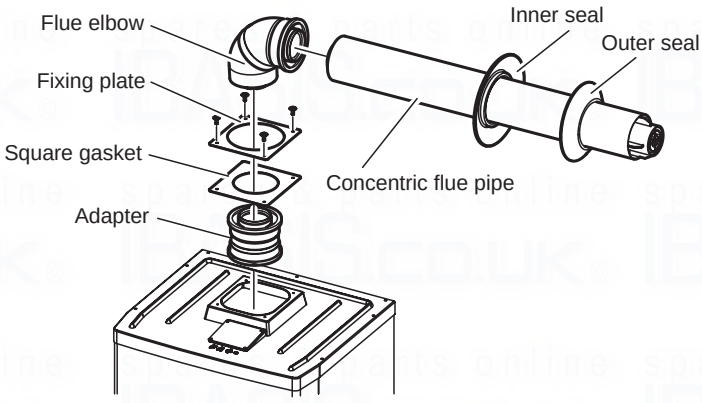

Fig. 21

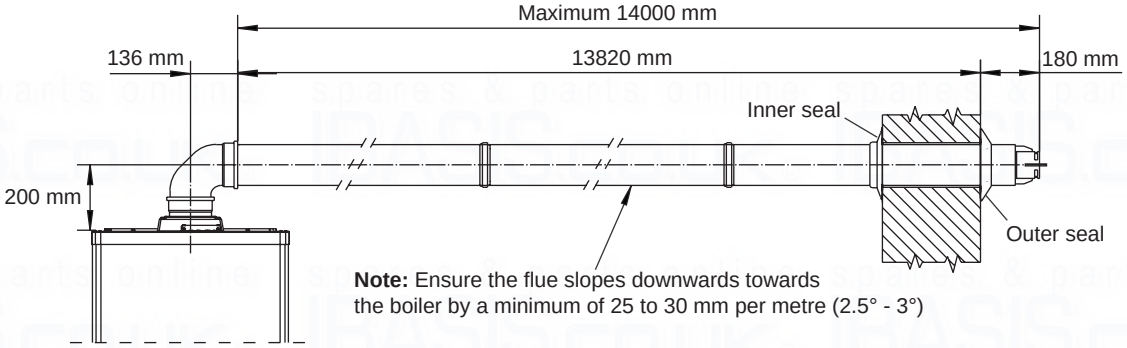

Fig. 22

4.7 CONNECT THE MAINS SUPPLY - Fig. 2

1. Remove the four screws securing the plastic top cover so that it can be lifted slightly at the front edge.
2. Remove the two fixing screws (one each side at the bottom) securing the case front panel (refer to Fig. 25). Pull the bottom of the panel outwards while pushing up at the same time and remove the panel then remove the two screws securing the control panel and lower the panel to gain access to the terminal block. Refer to Technical Data, Section 2.10 for connection details.
3. **Note:** This boiler has been fitted with a mains supply cable. However, if it is necessary to fit an alternative supply cable, ensure the cable clamp that has been fitted is removed and connect as follows:-
   Pass the mains supply cable through the cable clamp and connect as follows:- Brown to L, Blue to N and Green/Yellow to ⏚. Ensure correct polarity.
   Note: Ensure that the length of the earth wire is such that if the supply cable is pulled out of its clamp the live and neutral wires become taut before the earth wire.
   Do not switch on the electrical supply at this stage.
4. **If any external control, i.e. room thermostat etc. is to be fitted, refer to Fig. 2.**
   Note: All external control connections are less than 24 volts.
   Do not connect 230/240 volts to any of the terminals G to Z on the X86 terminal block or to the X84 terminal block.
5. Ensure that there is sufficient free cable to allow the control panel to be raised and lowered then tighten the cable clamp screws.
6. Leave the control panel open until commissioning procedures have been completed.
7. Carry out electrical system checks - Short circuit, Polarity, Earth continuity and Resistance to earth with a suitable multimeter.

5 COMMISSIONING

When commissioning the boiler, ensure the Benchmark Checklist is completed.

5.1 FILL THE SYSTEM

1. The boiler is fitted with an automatic air vent positioned as shown in Fig. 3, ensure that the vent is always open. The CD50S also has a manual air vent (see Fig. 3)
2. Open the central heating flow and return valves.
3. Open the fill point valve on the filling loop until water is heard to flow.
4. To remove the air - Vent each radiator in turn, starting with the lowest in the system.
5. It is important that the pump is properly vented to avoid it running dry and damaging its bearings. Unscrew and remove the cap from the centre of the pump. Using a suitable screwdriver rotate the exposed spindle about half a turn, then replace the cap.
6. Check the operation of the pressure relief valve (see Fig. 3 or 4) by turning the head anti-clockwise until it clicks. The click is the valve lifting off its seat allowing water to escape from the system - check that this is actually happening.
7. Continue to fill the system until the pressure gauge indicates 1.0 bar. Close the fill point valve and check the system for water soundness, rectifying where necessary. Disconnect the filling loop from the mains supply. If the system has been over pressurised water may be released from the system by manually operating the drain point (see Fig. 3 or 4) until the system design pressure is obtained. The system design pressure (cold) should be between 0.75 and 1.25 bar. **Refer to Sections 3.9 and 3.10. Filling and Flushing the system.**

5.2 TEST FOR GAS TIGHTNESS AND PURGE THE SUPPLY

1. With the boiler gas service cock closed. Pressure test the gas supply and inlet pipework connection to the boiler gas service cock for tightness in accordance with BS 6891.
2. Loosen the gas inlet pressure test point screw on the gas valve (see Fig. 23). Ensure the gas supply is on and open the boiler service cock to purge in accordance with BS 6891.
3. Retighten the test point screw and test for gas tightness. Close the boiler gas service cock.

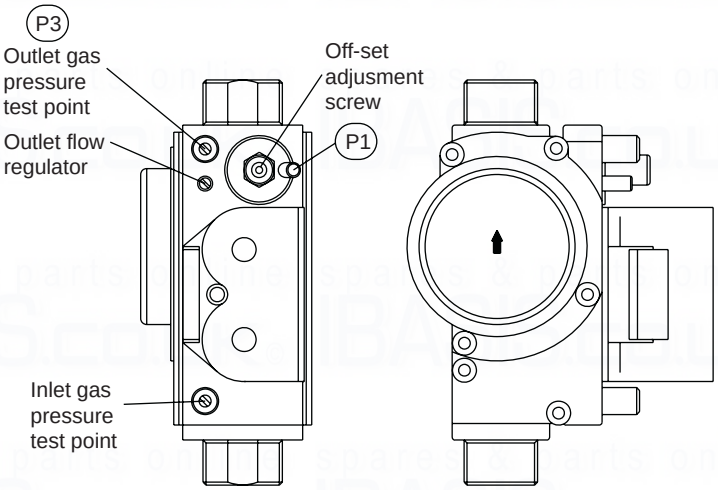

Fig. 23

5.3 BOILER CONTROLS - Fig. 24

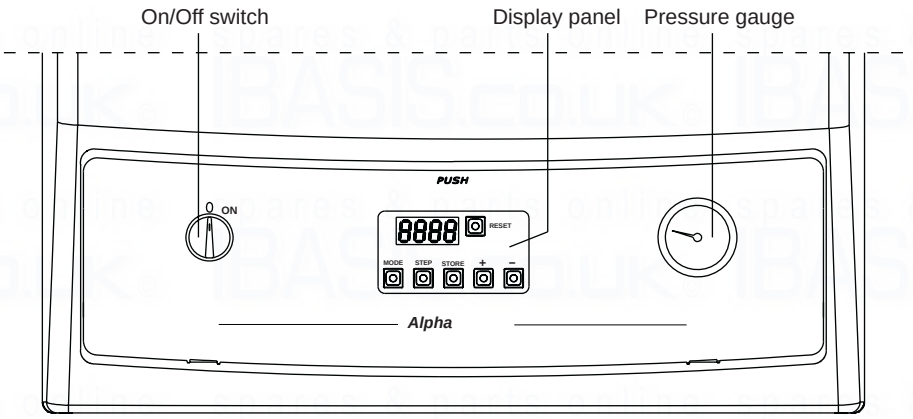

Fig. 24

5.4 INITIAL LIGHTING - Refer to Fig. 24

1. Ensure that the gas and electrical supplies to the boiler are off and that the heating flow and return valves are open.
2. Turn on the gas and electrical supplies to the boiler.
3. Ensure any external controls are calling for heat.
4. Set the On/Off switch to ON. The boiler will now run in the central heating mode. The pump will start, the fan will start and the main gas valve solenoid will open allowing the main burner to light.

5.5 BOILER DISPLAY PANEL AND FUNCTION MODES

The boiler display panel (see Fig. 24, is composed of a 4-character display and 6 keys. By using these keys it is possible to adjust the boiler as it would be by using traditional selector switches and knobs.

Table 2 gives the function of each key.

RESET	Manual reset for possible boiler block
MODE	Display menu selection key
STEP	Selection of parameter to be displayed or edited
STORE	Data and storage confirmation key
+	Increase set value
-	Decrease set value

Table 2

When the boiler is operating, the 4-figure display indicates the mode code (by means of the first 2 figures on the left) and the boiler flow temperature (by means of the other two figures on the right).

03 60

For example if these values are shown on the display it means that the boiler is operating in heating mode with a flow temperature of 60°C.

The boiler function modes are given in Table 3:

Mode code	Mode description
0	Stand - by, no operation demand
1	Pre-ventilation
2	Burner ignition
3	Burner lit (system heating)
4	Burner lit (domestic hot water)
5	Fan check
6	Burner off, requested temperature reached
7	Pump over-run in system heating mode
8	Pump over-run in domestic hot water mode
9 (flashing)	Burner off for one of the reasons given in Table 8
A	3 - way valve check

Table 3

5.6 BOILER FUNCTIONING PARAMETERS - Refer to Fig. 22

PARAMETER Mode - Press the MODE key once to enter Parameter mode. In this mode the preset operational values can be changed. The first two figures indicate the parameter number, the last two give the setting value. To change the boiler settings proceed as follows:

1. Press the MODE key once to enter parameter mode, using the STEP key select the parameter to be changed.
2. Change the value using the + or - keys, press the STORE key to store the new value.
3. Press MODE to make the new value effective.

Parameters that can be modified are given in Table 4

Parameter	Description	Lower limit value	Upper limit value	Factory set	New value
1	Domestic hot water setting value *	20°C	70°C	20°C	
2	Domestic hot water functioning mode	0 = disabled 1 = enabled 2 = disabled + continuous pump 3 = enabled + continuous pump		0	
3	Heating function mode	0 = disabled 1 = enabled 2 = disabled + continuous pump 3 = enabled + continuous pump		1	
4	Max. heating flow temperature	20°C	85°C	85°C	

***** Only active with hot water function enabled when external accessories are fitted.

Table 4

Parameter 1: Allows domestic hot water temperature to be set if controlled with NTC probe.

Parameter 2: Allows domestic hot water production to be activated or cut out. With factory settings domestic hot water production is cut out.

Parameter 3: Allows system heating function (Summer) to be cut out, or enabled (Winter). With factory settings system heating is on.

Parameter 4: Allows heating flow temperature to be set. If the external temperature probe is connected to the boiler, the electronics automatically determine the ideal system water temperature. This parameter represents the maximum temperature that the system delivery water can reach.

INFO Mode - Press the MODE key twice to enter INFO mode. In this mode the instantaneous operational values can be displayed and checked, but without making changes. The first two figures indicate the step number; the last two give the setting value.

02 40

For example if these values are shown on the display it means that the boiler is operating in heating mode with a return temperature of 40°C.

Step	Visulisation	Value
1	Flow temperature	Value in °C
2	Return temperature	Value in °C
3	Not active (Domestic temp., if domestic circuit probe is present)	70 (value in °C)
4	Not active (External temp., if probe is installed)	-37 (value in °C)
6	Flow temperature set point	Value in °C
7, 8, 9	Temperature gradients (cannot be modified)	°C/S
E	Flame current value	µA

Table 5

5.7 BOILER FUNCTIONING PARAMETERS

Tables 6 and 7 gives the boiler adjustment parameters with factory settings. To modify the parameters reserved for the Installer, it is necessary to enter an access code, which can be supplied on request.

To enter the code:

1. Press the MODE and STEP keys at the same time for 2 seconds; the display will show the wording CODE and subsequently a random number on the last two digits.
2. Change the value by operating the + or - keys until reaching the correct code.
3. Press the STORE key to confirm.

Possible settings for the Installer and User (without entering an access code)

Parameter	Description	Lower limit value	Upper limit value	Factory set	New value
1	Domestic hot water set point value	20°C	70°C	20°C	
2	Domestic hot water functioning mode	0 = disabled 1 = enabled 2 = disabled + continuous pump 3 = enabled + continuous pump		0	
3	Central heating functioning mode	0 = disabled 1 = enabled 2 = disabled + continuous pump 3 = enabled + continuous pump		1	
4	Max, central heating flow temperature	20°C	85°C	85°C	

Table 6

Settings accessible by the Installer only

Parameter	Description	Lower limit value	Upper limit value	Factory set	New value
10	Minimum heating flow temperature	15°C	60°C	20°C	
11	Lower external temperature limit	-30°C	10°C	-5°C	
12	Upper external temperature limit	15°C	25°C	20°C	
13	Antifreeze temperature	-30°C	10°C	0°C	
14	External probe reading correction	-5°C	5°C	0°C	
15	Max. secondary heating circuit temperature	Not active			
16	Min. secondary heating circuit temperature	Not active			
17	Secondary heating circuit temp hysteresis	Not active			
18	Min. tempearature set point value	0 = Off 1°C	60°C	0°C	
19	Booster time	0 = no booster 1 minute	30 minutes	0°C	
20	Flow temp compensation with ambient temp	0°C	80°C	0°C	
21	Temp increase rel to DHW set point	0	30°C	15°C	
22	Max fan rpm in heating mode (x100)	15	60	CD50S=52 CD70S=53	
23	Max fan rpm in heating mode (units)	0	99	0	
24	Max fan rpm in DHW mode (x100)	15	38	38	
25	Max fan rpm in DHW mode (units)	0	99	0	
26	Min fan rpm in heating mode (x100)	12	60	CD50S=13 CD70S=15	
27	Min fan rpm in heating mode (units)	0	99	0	
28	Fan rpm during ignition (x100)	21	27	23	
29	Fan rpm during stabilisation period (x100)	12	38	CD50S=16 CD70S=17	
30	Stabilisation period	0	900	06	
31	Heating mode ramp up	0	15	2	
32	Pump overrun at end of heating cycle	0 = 10 1 minute	99 minutes	3	
33	Pump overrun at end of DHW cycle	0 seconds	300 seconds	60	
34	Hysteresis modulation with heating ON	0°C	20°C	0°C	
35	Hysteresis modulation with heating OFF	0°C	10°C	5°C	
36	Hysteresis modulation with DHW ON	-5°C	30°C	0°C	
37	Hysteresis modulation with DHW OFF	0°C	30°C	5°C	
38	Hysteresis measurement with DHW ON	0°C	30°C	5°C	
39	Hysteresis measurement with DHW OFF	-5°C	30°C	0°C	
40	Heating mode timer	0	300 seconds	180	
41	DHW timer	0	300 seconds	0	
42	DHW heating mode transition timer	0 = phase with burner on 30 = phase with burner off 10 s		0	
43	Max time with DHW prioritised	0 min	120 min	0 min	
44	Cascade address	Not active			
45	Control type for heating installation	00 = ambient temp stat 01 = external probe 02 = 0 - 10 V power 03 = 0 - 10 V temperature		00	
46	Type of DHW installation	00 = instantaneous with probe 01 = instantaneous no probe 02 = Boiler with probe 03 = Boiler without probe		02	
47	Manual fan speed	1 = Off 0%	100%	-1	
48	PWM signal level for pump	1	4	Not active	

Table 7

Parameter	Description	Lower limit value	Upper limit value	Factory set	New value
49	PWM signal level for pump	10	50	Not active	
50	PWM signal level for pump	15	50	Not active	
51	PWM hysteresis	1°C	10°C	Not active	
52	PWM pump high/low level	16	255	Not active	
53	Low/Off and pump cycle	x0 = Off x1 = On 0x = Normal heating pump cycle 0x = Normal DHW pump cycle		00	
54	Min rpm for pressure switch (x100)	5	70	5	
55	Min temp for boiler maintain function	0°C	80°C	0°C	
56	Ramp up for HTG or HTG + DHW function	0 (heating only)	1 (HTG + DHW)	0	
57	Pre-ignition time	Not active			

Table 7 - *continued*

5.8 FINAL COMMISSIONING

1. Allow the heating system to heat up, then balance the system to achieve the necessary temperature difference across the heating flow and return pipes at the boiler and check the system volume and pressure. (Refer to Technical Data, Section 2.2).
2. Turn off the boiler.
4. Thoroughly flush out the water pipework (refer to Section 3.10).
5. Re-pressurise the system as described in Section 5.1.

5.9 FINAL ASSEMBLY

1. Raise and secure the control panel, replace the front cover and secure in position with the screws removed and secure the plastic top cover in position using the screws previously removed.
2. If the boiler is to be left in service with the User, set any external controls to the User's requirements.
3. If the boiler is not to be handed over immediately, close the boiler gas service cock and switch off the electrical supply.
4. If there is any possibility of the boiler being left during frost conditions, then the boiler and system should be drained. It is recommended that a label is attached to the boiler drawing attention to the fact that the system has been drained.
5. Complete the details of the installation in the Benchmark Checklist on page 32.

5.10 USER INFORMATION

The User must be advised (and demonstrate if necessary) of the following important points:-

1. How to light and turn off the boiler and how to operate any external system controls.
2. The importance of annual servicing of the boiler to ensure safe and efficient operation.
3. That any servicing or replacement of parts must only be carried out by CORGI registered personnel.
4. Ensure that the boiler controls are set to the User's requirements.
5. Tell the User about the sealed system pressure.
6. Tell the User that if the electrical supply is on and the boiler has not operated for 24 hours for heating or hot water, the pump will automatically operate for 5 minutes.
7. Explain to the User that an internal frost thermostat is fitted in the boiler, and that the electrical supply to the boiler must be left on for the thermostat to operate, i.e. the On/Off switch must be set to ON.
8. Explain to the User that in certain weather conditions the terminal will emit a plume of steam, i.e. water vapour. This is safe and quite normal.
9. Show the User the position of the pressure relief valve and condensate discharge pipes.
10. Hand the User's instructions to the User.
11. Ensure the Benchmark Checklist on page 32 has been completed after the boiler has been installed and commissioned.

    Note: It is a requirement that the installation is registered by the installer through the CORGI Gas Work Notification Scheme.
12. Leave these Installation and Servicing instructions with the User for use on future calls.

6 ROUTINE SERVICING

To ensure efficient operation of the boiler it is recommended that it is checked and serviced as necessary at regular intervals. The frequency of servicing will depend upon the particular installation conditions and usage, but in general once per year should be adequate.

It is the law that any service work must be carried out by a competent person, i.e. CORGI registered personnel.

Warning: Before servicing the boiler, isolate the electrical supply and close the boiler gas service cock. Allow the boiler to cool.

The data label is positioned on the inside of the right hand of the base plate.

Always test for gas tightness after servicing any gas carrying components.

Always carry out electrical system checks i.e. Earth Continuity, Resistance to Earth, Short Circuit and Polarity with a suitable meter after servicing.

Notes: 1. Prior to servicing, it is recommended that a flue gas analyser is used to measure the performance of the boiler (refer to Fig. 3 or 4 for the position of the flue sampling point). If the CO/CO_2 ratio measured is greater than 0.003 **or** when other checks and comments from the customer have indicated that there may be problems, cleaning of the heat exchanger will be necessary. All Sections 6.1, 6.2, 6.3 and 6.4 **must** be carried out. Repeat the flue gas analyser test after reassembling the boiler and check that the CO/CO_2 ratio is less than 0.003.

2. If the CO/CO_2 ratio measured is less than 0.003 and other checks and comments from the customer suggest there are no problems then only Section 6.1 and Section 6.2 paragraphs 1, 2 and 3 need to be carried out to allow a visual check of the components within the combustion chamber.

3. If a flue gas analyser is not available, then all Sections 6.1, 6.2, 6.3 and 6.4 **must** be carried out.

6.1 IMPORTANT NOTES PRIOR TO SERVICING

1. Check the flue terminal outside and ensure it is not blocked.
2. Run the boiler and check the operation of its controls.
3. Refer to Fig. 3 or 4 for location of flue sampling point.
4. Ensure that all system connections and fittings are sound.
5. Refill, vent and re-pressurise the system as necessary. (Refer to Commissioning, Section 5.1).
   If the system pressure exceeds 3.5 bar when operating at maximum temperature, the heating expansion vessel should be checked and re-pressurised, if necessary.
   Note: Check the expansion vessel charge only when the system pressure is zero.
6. Check that the condensate trap drain pipe is connected and all joints are sound.
7. Record details of the service in the Service Record Section on page 33.

6.2 CASING REMOVAL - Fig. 25

If required, the casing can be completely removed as follows:

1. Remove the bottom cover plate by removing its four fixing screws.
2. Remove the two screws (item 1) securing the bottom of the casing front panel (item 5).
3. Remove the screws (item 7) at the top of the cover (item 6).
4. Pull the bottom of the casing front panel outwards while pushing upwards at the same time to remove it from the boiler.
5. Remove the two screws (item 2), each side, securing the side panels to the front support bracket.
6. Remove the screws (item 3) at the bottom side of the boiler securing the bottom of the side panel (item 4), then push upwards in order to remove the side panel.

Note: If only the front panel is to be removed, remove the four screws securing the plastic top cover so that it can be lifted slightly at the front edge. Remove the two fixing screws (item 1) (one each side at the bottom) securing the case front panel. Pull the bottom of the panel outwards while pushing up at the same time and remove the panel

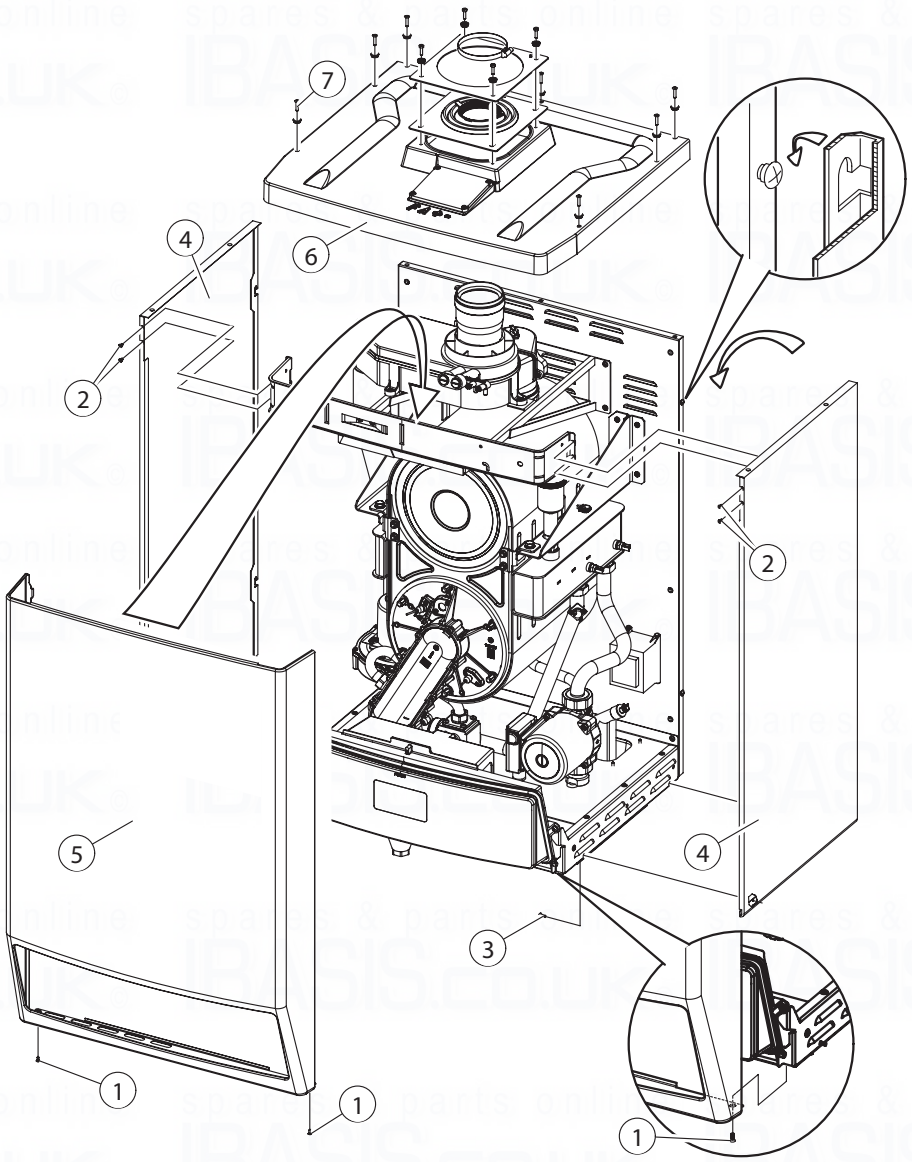

Fig. 25 - Case removal (CD70S shown)

6.3 PREPARE FOR SERVICING - Fig. 26 or 27

1. Ensure the electrical supply is isolated and the gas supply is off.
2. Remove the complete case or just the front panel as described in Section 6.2.
4. Disconnect the gas supply pipe union from the burner manifold.
5. Remove the two screws securing the fan assembly to the combustion chamber front.
6. Remove the pressure tube.
7. Disconnect the electrode lead from the ignition generator and the in-line connector to the flame sensing electrode.
8. Remove the six nuts and washers securing the combustion chamber front assembly and remove the assembly.

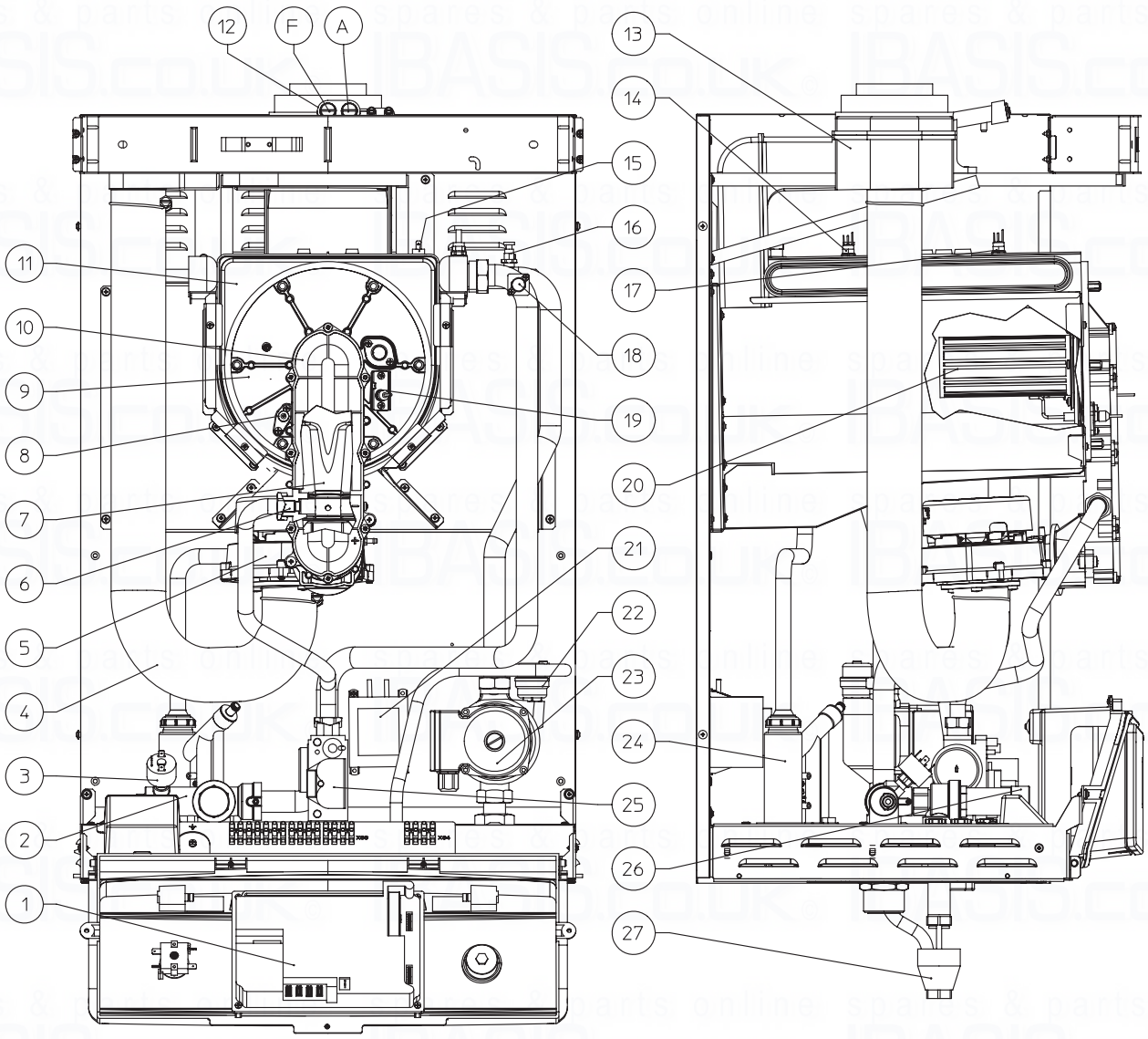

1	PCB	15	Flue thermostat
2	Delivery manifold	16	Manual air vent
3	System pressure switch	17	Primary flow NTC
4	Air intake pipe	18	Overheat thermostat
5	Fan	19	Ignition electrodes
6	Injecter	20	Burner
7	Venturi	21	Transformer
8	Ignition sensor	22	Automatic air vent
9	Combustion chamber front cover	23	Pump
10	Venturi housing	24	Condensate trap
11	Condensing heat exchanger	25	Gas valve
12	Test points (air A) - (flue F)	26	Safety valve 4 bar
13	Flue hood	27	Tundish
14	Primary return NTC		

Fig. 26 CD50S

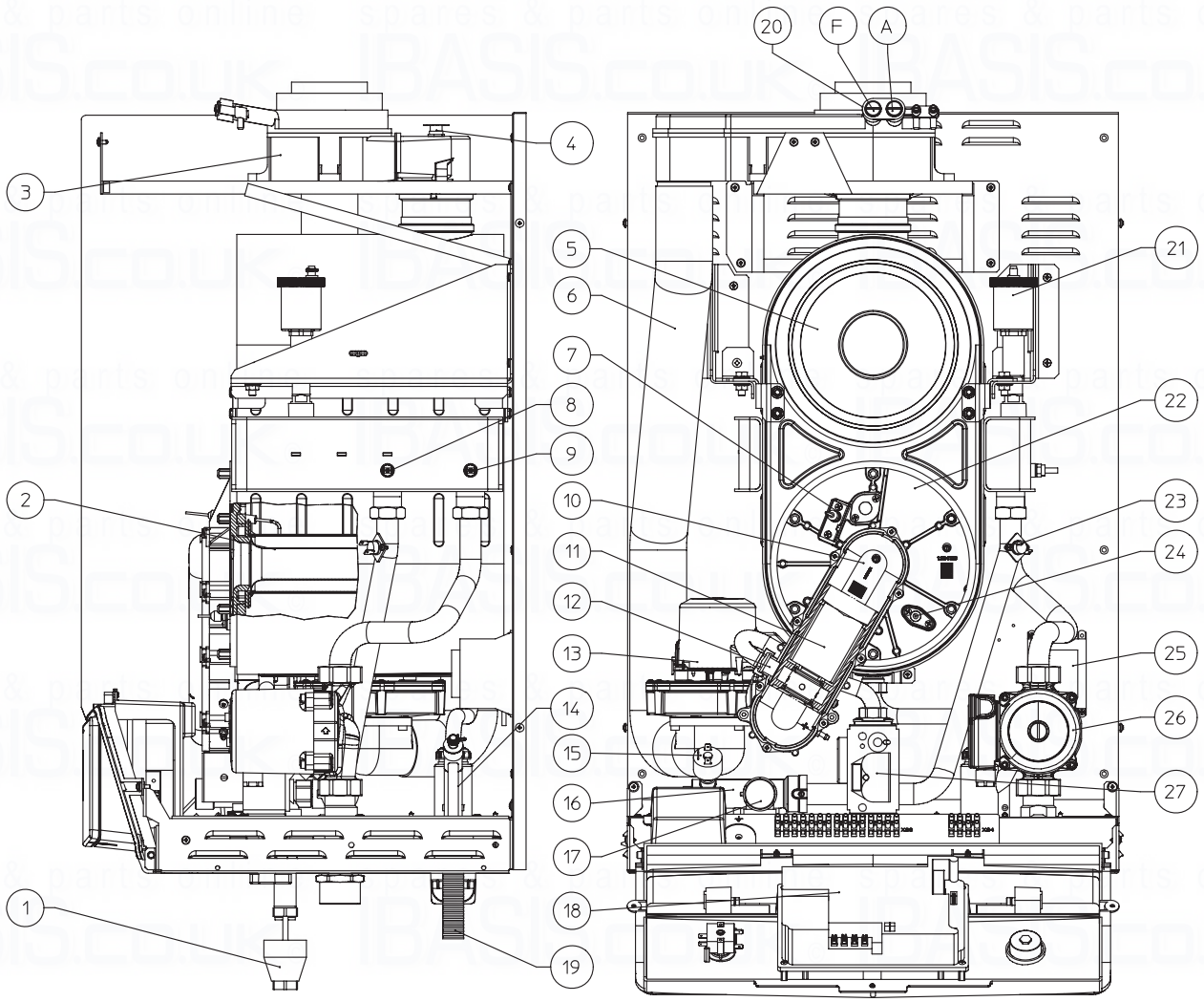

1	Tundish	15	System pressure switch
2	Burner	16	Flow manifold
3	Flue hood	17	Safety valve 4 bar
4	Flue overheat thermostat	18	PCB
5	Condensing heat exchanger	19	Condensate drain pipe
6	Air intake pipe	20	Test points (air A) - (flue F)
7	Ignition electrode	21	Automatic air vent
8	Primary flow NTC	22	Combustion chamber front cover
9	Primary return NTC	23	Overheat thermostat
10	Venturi housing	24	Ignition sensor
11	Venturi	25	Transformer
12	Injector	26	Pump
13	Fan	27	Gas valve
14	Condensate trap		

Fig. 27 CD70S

6.4 CLEANING THE BOILER

1. Remove any deposits from heat exchanger using a suitable soft brush. Do not use a brush with metallic bristles.
2. Check the condition of the combustion chamber insulation panels.
3. Check the condition of the burner injector on the combustion chamber front assembly, carefully clean them with a soft brush if necessary.
   Do not use a brush with metallic bristles as this might damage the injector.
4. Remove any deposits from the heat exchanger coils. This can be done by suction or water sprayed onto the coils. Ensure all electrical components are protected from water. Any water used to clean the heat exchanger will drain to the condensate trap.
5. Unscrew and replace the injector should it appear damaged.
6. Remove the four screws securing the burner and remove the burner. Clean the burner with a soft brush and check that the flame ports are clear. Blockages may be removed with a stiffer brush. Tap the burner, open end down, to remove any deposits from inside.
7. Check the condition of the electrodes.
9. Check the spark gap, positioning and height of the electrodes. Refer to Fig. 28.
10. Unscrew the condensate trap drain cap to remove any deposits.
    Note: Before removing the cap, ensure that the water released from the trap can be contained to avoid spillage. The trap will contain no more than 200 cc of condensate water. Replace the drain cap.

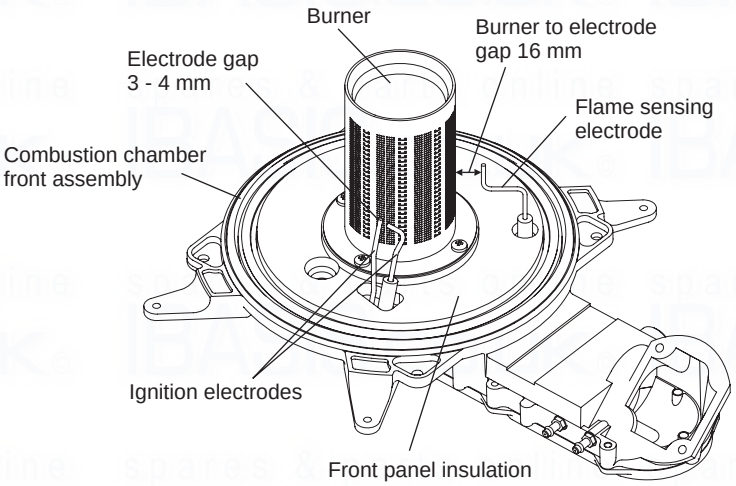

Fig. 28

6.5 RE-ASSEMBLE THE BOILER

1. Replace the burner, ensuring it is located correctly and secure it in position using the four screws previously removed.
   Important: Before replacing the combustion chamber front assembly, pour at least 200 cc of water into the coils of the heat exchanger. This is to ensure the condensate trap is full of water before operating the boiler.
2. Replace the combustion chamber front assembly, ensuring it is correctly located.
3. Ensure the electrode lead is connected.
4. Re-connect the gas pipe to the manifold, test the connections for gas tightness and re-commission, Sections 5.2 and 5.4.
5. Place the case or front case panel in position and secure in position with the screws previously removed, see Section 6.2.
7. Check the operation of the boiler.
8. Return all controls to their original settings.

7 WIRING DIAGRAM

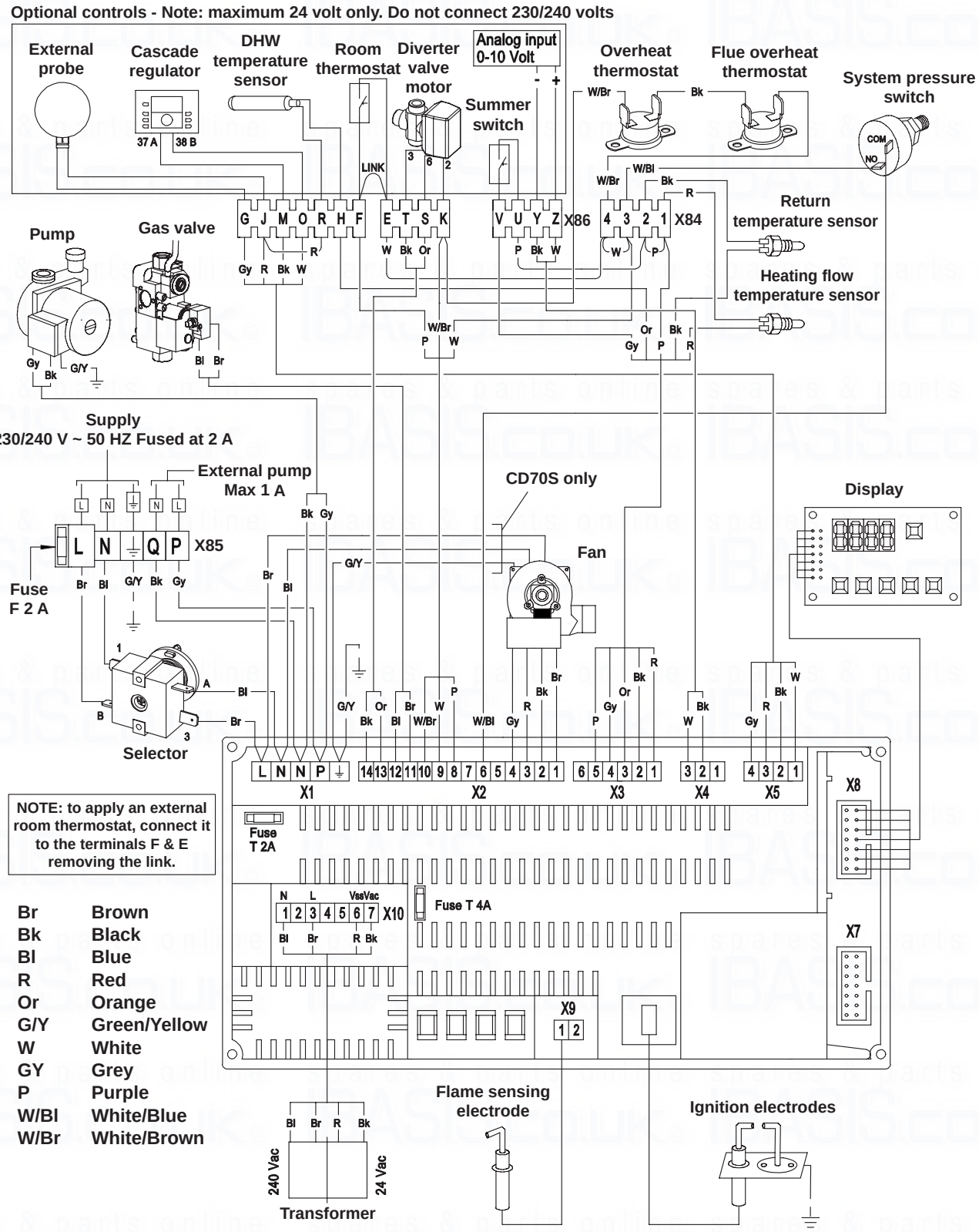

Fig. 29

8 FAULT FINDING

Boiler error codes that may appear on the right hand side of the boiler display panel when a fault shuts down the boiler. The code will be displayed with either the letter 'E' or 'b' on the left hand side.
'E' codes require a manual reset, 'b' codes will automatically reset.

Code	Description	Solution
00	Flame sensor fault detected	Check flame sensing electrode and wiring Check PCB
02	Ignition failure	Check gas supply Check electrode position Check flame sensing signal is greater than 6µA
03	Gas valve supply error	Check gas supply
05 06 11 13 14 15 16 17 44 60	Internal fault (electronics)	Check electrical connections Check PCB
04	Burner lock-out (electrical fault)	Check electrical connections
07	Gas valve relay fault	Check electrical connections
12	Overheat safety thermostat operated	Check PCB fuses Check primary flow thermostat Check flue thermostat
18	Primary flow temperature too high	Check water circulation Check for air in the system
19	Primary return temperature too high	Check water circulation Check for air in the system
24	Return temp. higher than flow temp. by more than 10°C after 180 sec	Check water circulation Check for air in the system
25	Rapid primary flow temperature increase	Check water circulation Check for air in the system
26	Insufficient water pressure	Check for system leaks Re-pressurise the system 0.75 - 1.25 bar
28	Fan fault (no Hall signal)	Check fan Check fuse F3
29	Fan fault	Check fan Check fuse F3 Check electrical connections Check PCB
30	Temperature difference between system flow and return too high	Check water circulation Check for air in the system
31	Primary flow temperature sensor fault (short circuited)	Check NTC resistance
32	Primary return temperature sensor fault (short circuited)	Check NTC resistance
33	Domestic temperature sensor fault (short circuited)	Check NTC resistance
36	System flow sensor fault (open)	Check NTC resistance
37	System return sensor fault (open)	Check NTC resistance
38	Domestic circuit sensor fault (open)	Check NTC resistance
65	Fan fault (insufficient air)	Check fan Check flue Check air inlet pipework
114	Invalid cascade signal	Check correct address setting on PCB
118	Loss of ionisation current during ignition of burner (after 3 attempts fault becomes error 02)	Check gas supply Check gas supply pressure Check gas supply pipework
FUSE	24 V fuse blown (T 4A)	Change fuse

Table 8

Examples of boiler error codes

This example of a manual reset fault means that the boiler has ignition failure. To eliminate the failure press the RESET button on the boiler control panel (see Fig. 24).

This example of an automatic reset fault means that the temperature difference between the system flow and return is more than 40°C. The boiler will automatically reset when the anomaly disappears.

9 SHORT PARTS LIST

Description	Qty.	Alpha Pt. No.
Main PCB	1	1.025819
Display PCB	1	1.019405
Control panel flap	1	1.018884
Control panel - CD50S	1	1.027173
Control panel - CD70S	1	1.027180
Pressure gauge	1	1.015807
Transformer	1	1.025780
Flame sensor	1	1.026474
Flame sensor lead	1	3.019870
Ignition electrodes and lead	1	3.019718
Combustion chamber cover - CD50S	1	1.025506
Combustion chamber cover - CD70S	1	1.024139
Burner - CD50S	1	1.017499
Burner - CD70S	1	1.025333
Injector Nat Gas - CD50S	1	1.019802
Injector Nat Gas - CD70S	1	1.025283
Injector LPG - CD50S	1	1.019818
Injector LPG - CD70S	1	1.026051
Fan - CD50S	1	1.021206
Fan - CD70S	1	1.023299
Flexible air inlet pipe - CD50S	1	1.019313
Flexible air ilnet pipe - CD70S	1	1.024266
Primary Heat exchanger _ CD50S	1	1.022167
Primary heat exchanger - CD70S	1	1.024241
Plastic flue manifold - CD50S	1	3.017115
Plastic flue manifold - CD70S	1	3.017475
Primary NTC	1	1.023435
Pump - CD50S	1	1.021532
Pump - CD70S	1	1.024234
Automatic air vent - CD50S	1	1.019735
Automatic air vent - CD70S	1	1.2295
Primary pressure switch	1	1.021715
Gas valve - CD50S	1	1.019556
Gas valve - CD70S	1	1.024263
Expansion relief valve	1	1.018879
Flow manifold	1	1.024184
Overheat thermostsat	1	1.016870
Flue thermostat - CD50S	1	1.012067
Flue thermostat - CD70S	1	1.021356
Pipe, pump to heat exchanger - CD50S	1	1.025017
Pipe, pump to heat exchanger - CD70S	1	1.024282
Pipe, heat exchanger to manifold - CD50S	1	1.027141
Pipe, heat exchanger to manifold - CD70S	1	1.024289
Pipe, gas valve to burner manifold - CD50S	1	1.018784
Pipe, gas valve to burner manifold - CD70S	1	1.024264
LH side panel	1	2.012075
RH side panel	1	2.012074
Flow/return adapter 1 1/2"	1	3.019369
Tundish	1	1.018870
Pipe, tundish adapter	1	1.011654

10 benchmark CHECKLIST

Ensure the following is completed after the boiler has been installed and commissioned:-

BOILER SERIAL No. ..... NOTIFICATION No. .....

***CONTROLS** To comply with the Building Regulations, each section must have a tick in one or other of the boxes*

Time & temperature control to heating	room t/stat & programmer/timer	☐	Programmable roomstat	☐
Time & temperature control to hot water	cylinder t/stat & programmer/timer	☐	Combi boiler	☐
Heating zone valves	Fitted	☐	Not required	☐
Hot water zone valves	Fitted	☐	Not required	☐
Thermostatic radiator valves	Fitted	☐		
Automatic by-pass to system	Fitted	☐	Not required	☐

FOR ALL BOILERS CONFIRM THE FOLLOWING:

The system has been flushed in accordance with the boiler manufacturer's instructions? ☐ Yes ☐ No

The system cleaner used .....

The inhibitor used .....

FOR CENTRAL HEATING MODE, MEASURE AND RECORD THE FOLLOWING:

Gas rate	☐	m³/hr	☐	ft³/hr
Burner operating differential pressure (if applicable)	☐	N/A	☐	mbar
Central heating flow temperature			☐	°C
Central heating return temperature			☐	°C

FOR COMBINATION BOILERS ONLY

Has a water scale reducer been fitted? ☐ Yes ☐ No

What type of scale reducer has been fitted? .....

FOR DOMESTIC HOT WATER MODE, MEASURE AND RECORD THE FOLLOWING:

Gas rate	☐	m³/hr	☐	ft³/hr
Maximum burner operating differential pressure (if applicable)	☐	N/A	☐	mbar
Cold water inlet temperature			☐	°C
Hot water outlet temperature			☐	°C
Water flow rate			☐	lts/min

FOR CONDENSING BOILERS ONLY CONFIRM THE FOLLOWING:

The condensate drain has been installed in accordance with the manufacturer's instructions? ☐ Yes

FOR ALL INSTALLATIONS CONFIRM THE FOLLOWING:

The heating and hot water system complies with current Building Regulations ☐ Yes

The appliance and associated equipment has been installed and commissioned in accordance with the manufacturer's instructions ☐ Yes

If required by the manufacturer, have you recorded a CO/CO_2 ratio reading ☐ N/A ☐ Yes ☐ CO/CO_2 ratio

The operation of the appliance and system controls have been demonstrated to the customer ☐ Yes

The manufacturer's literature has been left with the customer ☐ Yes

COMMISSIONING ENG'S NAME:

Print ..... CORGI ID No. .....

Sign ..... Date .....

11 SERVICE RECORD

It is recommended that your heating system is serviced regularly and that you complete the appropriate Service Interval Record below.

Service Provider: Before cpmpleting the appropriate Service Interval Record below, please ensure you have carried out the service as described in this instruction manual. Always use the manufacturer's specified spare parts when replacing all controls.

SERVICE 1: Date .....
Engineers Name .....
Company Name .....
Telephone No. .....
CORGI ID card serial No. .....
Comments .....
.....
Signature .....

SERVICE 2: Date .....
Engineers Name .....
Company Name .....
Telephone No. .....
CORGI ID card serial No. .....
Comments .....
.....
Signature .....

SERVICE 3: Date .....
Engineers Name .....
Company Name .....
Telephone No. .....
CORGI ID card serial No. .....
Comments .....
.....
Signature .....

SERVICE 4: Date .....
Engineers Name .....
Company Name .....
Telephone No. .....
CORGI ID card serial No. .....
Comments .....
.....
Signature .....

SERVICE 5: Date .....
Engineers Name .....
Company Name .....
Telephone No. .....
CORGI ID card serial No. .....
Comments .....
.....
Signature .....

SERVICE 6: Date .....
Engineers Name .....
Company Name .....
Telephone No. .....
CORGI ID card serial No. .....
Comments .....
.....
Signature .....

SERVICE 7: Date .....
Engineers Name .....
Company Name .....
Telephone No. .....
CORGI ID card serial No. .....
Comments .....
.....
Signature .....

SERVICE 8: Date .....
Engineers Name .....
Company Name .....
Telephone No. .....
CORGI ID card serial No. .....
Comments .....
.....
Signature .....

SERVICE 9: Date .....
Engineers Name .....
Company Name .....
Telephone No. .....
CORGI ID card serial No. .....
Comments .....
.....
Signature .....

SERVICE 10: Date .....
Engineers Name .....
Company Name .....
Telephone No. .....
CORGI ID card serial No. .....
Comments .....
.....
Signature .....

spares & parts online
IBASIS.CO.UK

spares & parts online
IBASIS.CO.UK

Alpha
HEATING INNOVATION
Alpha Therm Limited.
Nepicar House, London Road, Wrotham Heath,
Sevenoaks, Kent TN15 7RS
Tel: 0870 3001964
email: info@alphatherm.co.uk
website:www.alpha-innovation.co.uk

These instructions have been carefully prepared but we reserve the right to alter the specification at any time in the interest of product improvement.
© Alpha Therm Limited 2008.

Part No. 1.027175

Manual compiled and designed by Publications 2000 - Tel: (01670) 356211

06/08/D222