Installation and Servicing Instructions

Alpha InTec
26C, 30C, 34C and 24X, 28X

Range of Wall Mounted, Fan Assisted, Room Sealed, Gas Fired, High Efficiency Condensing Combination Boilers

For Technical help or for Service call ...
ALPHA HELPLINE Tel: 0844 871 8764
website: www.alpha-innovation.co.uk

Alpha
HEATING INNOVATION

Nepicar House, London Road,
Wrotham Heath, Sevenoaks,
Kent TN15 7RS

British Gas
Service Listed

CE 0051

WRAS APPROVED PRODUCT

benchmark COLLECTIVE MARK
THE MARK OF QUALITY FOR THE INSTALLATION, COMMISSIONING AND SERVICING OF DOMESTIC HEATING AND HOT WATER SYSTEMS

For use with Natural Gas or Propane Gas (AS SUPPLIED)

Leave these instructions with the User

spares & parts online IBASIS.CO.UK

BENCHMARK SCHEME

To comply with Building Regulations Part L1 (Part 6 in Scotland) the boiler should be installed in accordance with the manufacturer's instructions. Self-certification that the boiler has been installed to comply with Building Regulations can be demonstrated by completing and signing the Benchmark Checklist at the back of these instructions

Code of Practice

For the installation, commissioning and servicing of domestic heating and hot water products.

Benchmark places responsibilities on both manufacturers and installers*. The purpose is to ensure that customers** are provided with the correct equipment for their needs, that it is installed, commissioned and serviced in accordance with the manufacturer's instructions by competent persons and that it meets the requirements of the appropriate Building Regulations. Installers are required to carry out work in accordance with the following:

Standards of Work

- Be competent and qualified to undertake the work required.
- Install, commission, service and use products in accordance with the manufacturer's instructions provided.
- Ensure that where there is responsibility for design work, the installation is correctly sized and fit for purpose.
- Meet the requirements of the appropriate Building Regulations. Where this involves notifiable work be a member of a Competent Persons Scheme or confirm that the customer has notified Local Authority Control (LABC), prior to work commencing.
- Complete all relevant sections of the Benchmark Check list/Service Record when carrying out commissioning or servicing of a product or system.
- Ensure that the product or system is left in a safe condition and, where possible, in good working order.
- Highlight to the customer any remedial or improvement work identified during the course of commissioning or servicing work.
- Refer to the manufacturer's helpline where assistance is needed.
- Report product faults and concerns to the manufacturer in a timely manner.

Customer Service

- Show the customer any identity card that is relevant to the work being carried out prior to commencement or on request.
- Give a full and clear explanation/demonstration of the product or system and its operation to the customer.
- Hand over the manufacturer's instructions, including the Benchmark Checklist, to the customer on completion of an installation.
- Obtain the customer's signature on the Benchmark Checklist to confirm satisfactory demonstration and receipt of manufacturer's instructions.
- Advise the customer that regular product servicing is needed, in line with manufacturers' recommendations, to ensure that safety and efficiency is maintained.
- Respond promptly to calls from a customer following completion of their work, providing advice and assistance by phone and, if necessary, visiting the customer.
- Rectify any installation problems at no cost to the customer during the installer's guarantee period.

* The use of the word "installer" is not limited to installation itself and covers those carrying out installation, commissioning and/or servicing of heating and hot water products, or the use of supporting products (such as water treatment or test equipment).

** Customer includes householders, landlords and tenants.

The Benchmark Scheme is managed and promoted by:
Heating and Hotwater Industry Council (HHIC)
Camden House, Warwick Rd
Kenilworth
CV8 1TH
Telephone: 01926 513747
E-mail: info@hhic.org.uk
Website: www.hhic.org.uk

benchmark COLLECTIVE MARK
THE MARK OF QUALITY FOR THE INSTALLATION, COMMISSIONING AND SERVICING OF DOMESTIC HEATING AND HOT WATER SYSTEMS

Useful contact details; **Gas Safe Register** - 0800 408 5577 - www.gassaferegister.co.uk

Alpha Heating Innovation;
General Sales Enquiries - 0844 871 8760
Technical Helpline - 0844 871 8764

CONTENTS

1 Introduction.....3
2 Technical data 4
3 General boiler information 8
4 Installation 15
5 Commissioning.....23
6 Routine servicing.....27
7 Component replacement 30
8 Wiring diagrams 37
9 Error codes and fault finding.....39
10 Short parts list 41
Benchmark Checklist.....42
Service record 43

1 INTRODUCTION

The Alpha InTec range of high efficiency condensing boilers are wall mounted, fan assisted room-sealed combination boilers. The burner is lit electronically and the heat output is controlled by a modulating fan and gas valve.

These are combination boilers providing both central heating and domestic hot water at mains pressure.

The boilers are supplied with a pump, pressure relief valve, expansion vessel and pressure gauge fully assembled and tested. They are designed for use with a fully pumped, sealed and pressurised central heating system.

IMPORTANT

It is the law that all gas appliances are installed by a competent person, ie Gas Safe registered personnel, in accordance with the following recommendations:-

Current Gas Safety (Installation and Use) Regulations

All current Building Regulations issued by the Department of the Environment, i.e. Approved Document L1.

Building Standards (Scotland) (Consolidation) Regulations issued by the Scottish Development Department

UK Water Regulations/Byelaws (Scotland)

Health & Safety Document No. 635 (The Electricity At Work Regulations 1989)

The installation should also be in accordance with the following British Standard Codes of Practice:-

BS 5440:1	Flues
BS 5449:	Forced circulation hot water systems
BS 5546:	Installation of hot water supplies for domestic purposes
BS 6700:	Design, installation, testing and maintenance of services supplying water
BS 6798:	Installation of gas fired hot water boilers
BS 6891:	Gas installation
BS 7593:	Code of Practice for treatment of water in heating systems
BS 7671:	Requirements for electrical installations, IEE Wiring Regulations

Reference should be made to DEFRA document 'Guide to condensing boiler installation assessment procedures for dwellings'.

If installation is in a timber framed building, refer to the Institute of Gas Engineers document IGE/UP/7.

This appliance meets the requirements of IPX4D, ie degree of protection against moisture.

This appliance contains no asbestos and no substances have been used in the construction process that contravene the COSHH Regulations (Control of Substances Hazardous to Health).

Failure to install this appliance correctly could lead to prosecution. It is in your own interest and that of safety to ensure that the law is complied with.

Manufacturer's instructions must **NOT** be taken in anyway as over-riding statutory obligations.

Notes:
1. Ensure that the Benchmark Checklist has been completed after the boiler has been installed and commissioned.
2. It is the law that all boiler installations are registered by the installer through the Gas Safe Gas Work Notification Scheme.
3. The boiler must only be used with Alpha CD condensing flue components.

NOTE: All models may be supplied ready for use with Propane (LPG) - Refer to Section 2.2 for data specific to Propane versions.

The boilers are designed for use with a fully pumped, sealed and presurised heating system using only Propane gas.

In addition to the regulations and requirements stated in these instalation and servicing instructions, the boiler must be installed in accordance with BS 5482:1 - The Installation of Propane Burning Appliances in Permanent Dwellings.

Installation pipes, cylinders and pressure regulators should be fitted in accordance with BS5482:1. Bulk tank installations must comply with the requirements of the Home Office code of practice for the storage of liquefied petroleum gas at fixed installations.

Propane boilers **must not** be installed in a room or internal space below ground level, e.g. in a basement or cellar, except where at least one side is open to ground level.

Propane supply pipes must be capable of delivering the required quantity of gas in addition to the demand from any other appliances in the house. The complete installation must be tested for gas soundness against leaks.

Propane boilers have been tested and factory set for use with Propane, it should only be necessary to ensure the correct gas supply pressure of 37 mbar is available.

2 TECHNICAL DATA

2.1 TECHNICAL PERFORMANCE DATA - NATURAL GAS (Cat I2H 2H - G20 20 mbar)

		InTec 26C	InTec 30C	InTec 34C	InTec 24X	InTec 28X
Heat input gross - DHW	kW	29.7	32.7	37.9	27.5	31.4
Heat input gross - CH	kW	20.6	27.1	31.5	20.6	27.1
Heat input net - DHW	kW	26.8	29.5	33.7	24.8	28.3
Heat input net - CH	kW	18.6	24.4	28.0	18.6	24.4
Heat output condensing (50/30°C) - CH	kW	20.0	26.3	30.7	20.0	26.8
Heat output non condensing (80/60°C) CH	kW	18.0	23.6	27.6	18.0	23.6
Heat output min. - CH	kW	3.2	4.8	7.2	3.2	4.8
Heat output nominal - DHW	kW	26.3	29.0	33.7	24.3	28.0
Heat output max. - DHW	kW	28.4	31.7	36.7	26.4	30.6
Gas rate at max. output	m^3/h	2.84	3.12	3.62	2.62	3.0
Gas supply pressure	mbar	20	20	20	20	20
Max. CH temperature	°C	82	82	82	82	82
Gas burner injector diameter	mm	5.1	6.8	N/A	5.1	6.8
Differential burner pressure - min.	mbar	0.17	0.15	0.15	0.17	0.15
Differential burner pressure - CH	mbar	3.95	2.34	1.33	3.72	2.36
Differential burner pressure - DHW	mbar	7.61	3.65	2.06	6.48	3.28
DHW flow rate at 35°C rise	l/min	11.6	12.6	14.5	10.8	12.3
DHW flow rate at 30°C rise - EN625	l/min	13.6	14.7	16.9	12.6	14.3
DHW flow regulator	l/min	13	N/A	N/A	12	14
Dry NOx weight	mg/kWh	22	30	36	22	30
Dry NOx	PPM	13	17	20	13	17
NOx	Class	5	5	5	5	5
Factory set max. CO_2 (± 0.5%)						
CO_2 maximum - CH output	%	9.4	9.45	9.5	9.4	9.45
CO_2 maximum - DHW output	%	9.4	9.45	9.5	9.4	9.45
CO_2 minimum output	%	8.6	8.6	8.7	8.6	8.6
CO	PPM	24	18	25	24	18
CO weight	mg/kWh	25	19	27	25	19
Maximum CO/CO_2	Ratio	0.003	0.003	0.003	0.003	0.003
SAP/SEDBUK seasonality efficiency 2005	%	90.3	90.03	90.5	90.3	90.03
SAP/SEDBUK seasonality efficiency 2009	%	89.2	88.22	88.76	89.2	88.22
EN13203/2 DHW efficiency	%					
Max. primary system pressure	bar	2.5	2.5	2.5	2.5	2.5
Min. primary system pressure	bar	0.5	0.5	0.5	0.5	0.5
Recommended system pressure - Cold	bar	1.0	1.0	1.0	1.0	1.0
System pressure relief valve setting	bar	3.0	3.0	3.0	3.0	3.0
Expansion vessel size	litres	8.0	8.0	8.0	8.0	8.0
Expansion vessel charge pressure	bar	1.0	1.0	1.0	1.0	1.0
Electrical power consumption - Max.	Watts	115	120	125	115	120
Electrical power consumption - Standby	Watts	6	6	6	6	6

2.2 TECHNICAL PERFORMANCE DATA - PROPANE GAS (Cat I3P 3P - G31 - 37 mbar)

		InTec 26C	InTec 30C	InTec 34C	InTec 24X	InTec 28X
Heat input gross - DHW	kW	29.7	32.7	37.9	27.5	31.4
Heat input gross - CH	kW	20.6	27.1	31.5	20.6	27.1
Heat input net - DHW	kW	26.8	29.5	33.7	24.8	28.3
Heat input net - CH	kW	18.6	24.4	28.0	18.6	24.4
Heat output condensing (50/30°C) - CH	kW	20.0	26.3	30.7	20.0	26.8
Heat output non condensing (80/60°C) CH	kW	18.0	23.6	27.6	18.0	23.6
Heat output min. - CH	kW	3.2	4.8	7.2	3.2	4.8
Heat output nominal - DHW	kW	26.3	29.0	33.7	24.3	28.0
Heat output max. - DHW	kW	28.4	31.7	36.7	26.4	30.6
Gas rate at max. output	l/h	4.1	4.5	5.2	3.8	4.3
Gas supply pressure	mbar	37	37	37	37	37
Max. CH temperature	°C	82	82	82	82	82
Gas burner injector diameter	mm	3.8	4.8	5.8	3.8	4.8
Differential burner pressure - min.	mbar	0.2	0.18	0.25	0.2	0.18
Differential burner pressure - CH	mbar	4.95	2.7	2.24	4.87	2.85
Differential burner pressure - DHW	mbar	9.12	4.16	3.44	7.87	3.99
DHW flow rate at 35°C rise	l/min	11.6	12.6	14.5	10.8	12.3
DHW flow rate at 30°C rise - EN625	l/min	13.6	14.7	16.9	12.6	14.3
DHW flow regulator	l/min	13	N/A	N/A	12	14
Factory set max. CO_2 (± 0.5%)						
CO_2 maximum - CH output	%	10.5	10.6	9.4	10.5	10.6
CO_2 maximum - DHW output	%	10.5	10.6	10.5	10.5	10.6
CO_2 minimum output	%	9.7	9.7	10.5	9.7	9.7
Maximum CO/CO_2	Ratio	0.003	0.003	0.003	0.003	0.003

2.3 PHYSICAL DATA

			InTec 26C	InTec 30C	InTec 34C	InTec 24X	InTec 28X
Boiler flow and return connections		mm	22	22	22	22	22
Relief valve connection		mm	15	15	15	15	15
DHW inlet (cold) DHW outlet (hot) connections		mm	15	15	15	15	15
Gas connection diameter		mm	22	22	22	22	22
Boiler dimensions	Height	mm	720	720	720	720	720
	Width	mm	440	440	440	440	440
	Depth	mm	300	300	300	300	300
Clearances for servicing	Bottom	mm	150	150	150	150	150
	Bottom (with jig)	mm	250	250	250	250	250
	Top (horizontal flue)	mm	235	235	235	235	235
	Top (vertical flue)	mm	150	150	150	150	150
	Sides	mm	5	5	5	5	5
	Front	mm	450	450	450	450	450
Recommended hole size for flue pipe		mm	110	110	110	110	110
Boiler dry lift weight		kg	38	39	41	37	38
Max. total flue length	Horizontal	m	12	12	12	12	12
Max. total flue length	Vertical	m	15	15	15	15	15
Flue system diameter	mm		60/100	60/100	60/100	60/100	60/100
Factory fitted	Filling loop		Yes	Yes	Yes	No	No
	Seasonality valve		Yes	Yes	Yes	No	No
GasSaver compatible - Solar compatible			Yes	Yes	Yes	Yes	Yes

2.4 FLUE LENGTHS

CD Easy-Flue 500 mm with terminal and 90° bend. A CD Easy-Flue 1000 mm with terminal and 90° bend is also available.
CD 750 mm and 1000 mm flue extensions are available.
Length of Flue Required:-

Rear Flue = wall thickness + 160 mm (includes terminal). This is without back frame, add 45 mm if the wall jig is used.
Side Flue = wall thickness + distance between wall and side of boiler + 245 mm (includes terminal)
Vertical Flue = distance from top of boiler side panel to required roof position minus 1000 mm for vertical terminal assembly

Maximum horizontal flue length = 12 m.
Maximum vertical flue length including terminal is 14 m.
Each additional CD 90° Bend is equivalent to 1.3 m of flue length.
Each CD 45° Bend is equivalent to 0.9 m of flue length.
The CD Vertical Flue terminal assembly is equivalent to 1 m of flue length.

2.5 AVAILABLE PUMP HEAD FOR CENTRAL HEATING

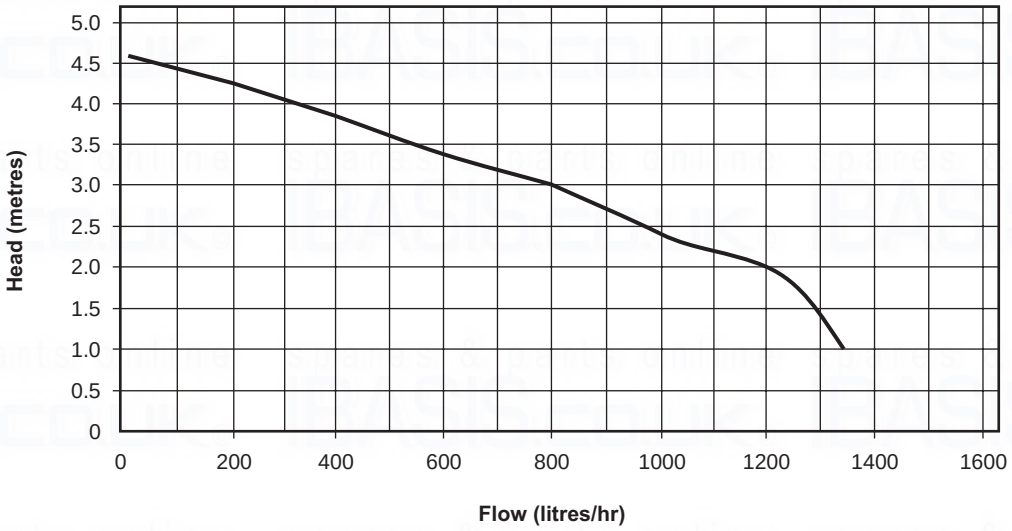

2.6 ELECTRICAL CONNECTIONS

Note: This Appliance Must Be Earthed

Optional integral single channel controls are available if required.

Note: Only use the Alpha single channel controls. **Do not fit any two channel controls.**

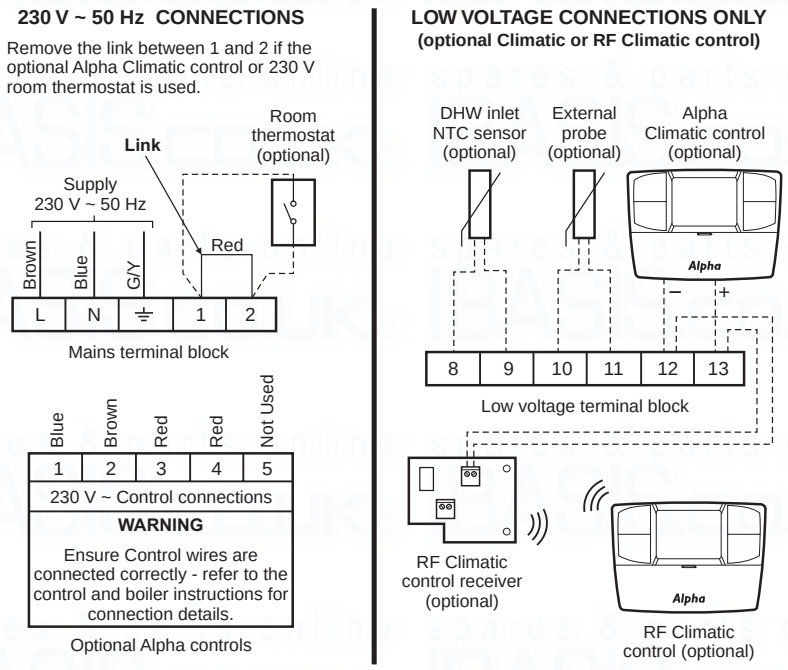

Fig. 1

2.7 BOILER SCHEMATIC

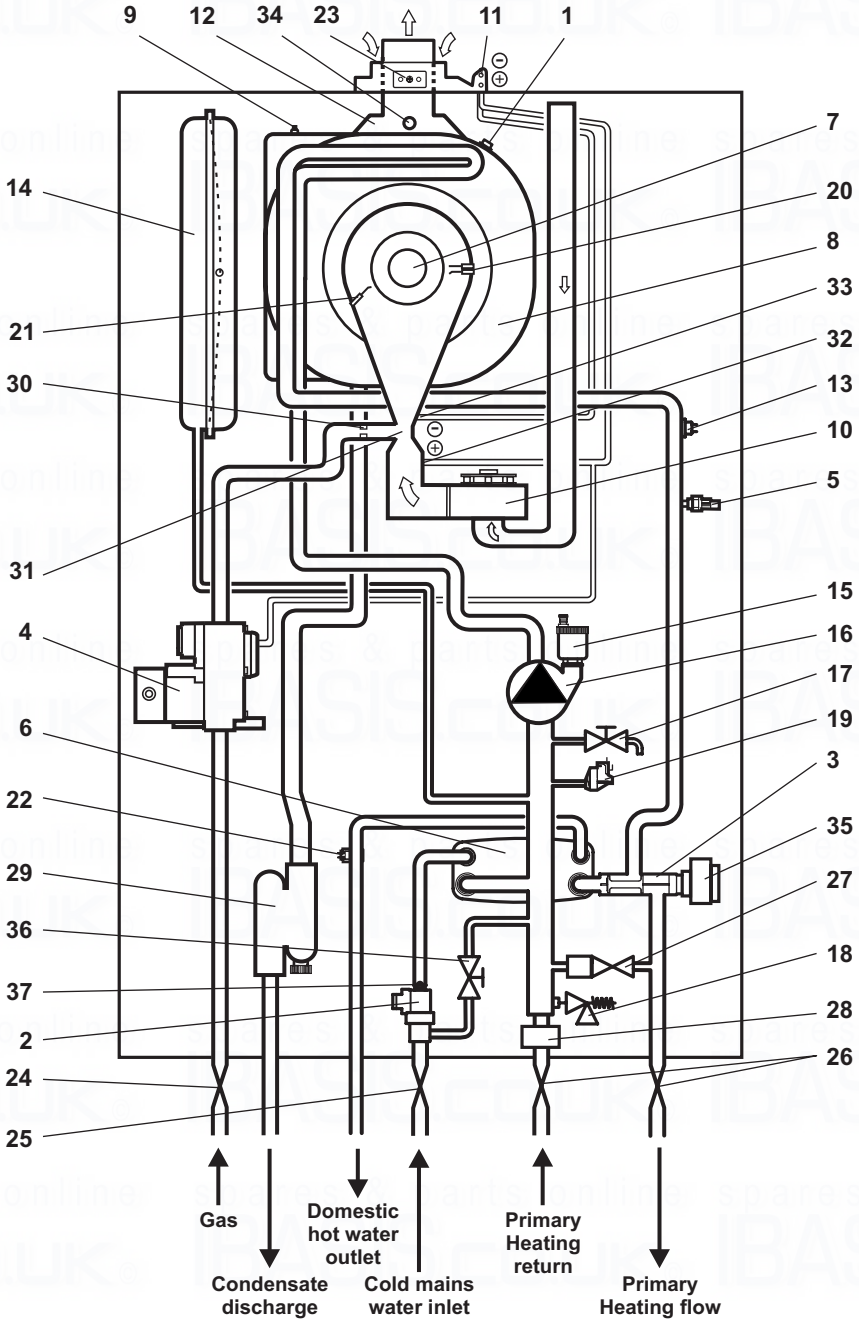

1 - Heat exchanger thermal fuse
2 - DHW flow switch, filter and flow regulator
3 - Diverter valve
4 - Gas valve
5 - Primary temperature sensor
6 - DHW heat exchanger
7 - Main burner
8 - Primary/condensing heat exchanger
9 - Manual air vent
10 - Fan
11 - Pressure differential test points
12 - Flue hood
13 - Overheat thermostat
14 - Expansion vessel
15 - Automatic air vent
16 - Pump
17 - Drain point
18 - Pressure relief valve
19 - Primary pressure switch
20 - Ignition electrodes
21 - Flame sensing electrode
22 - DHW temperature sensor
23 - Flue sampling point
24 - Gas service cock
25 - Mains inlet on/off valve
26 - On/off valve (2 off)
27 - Automatic by-pass
28 - Cyclone separator (if applicable)
29 - Condensate trap
30 - Injector
31 - Venturi
32 - Venturi positive point
33 - Venturi negative point
34 - Flue temperature sensor
35 - Diverter valve motor
36 - Filling loop (if applicable)
37 - Flow regulator (if fitted)

Fig. 2

3 GENERAL BOILER INFORMATION

3.1 GAS SUPPLY

The meter and supply pipes must be capable of delivering the required quantity of gas in addition to the demand from any other appliances in the house.

Refer to Technical performance data in Section 2.1 and 2.2.

The complete installation, including the meter, must be tested for gas tightness and purged as described in BS 6891.

3.2 ELECTRICAL SUPPLY

The boiler requires a 230/240 V ~ 50 Hz mains supply, fused at 3 A

The boiler must be earthed.

There must only be one common isolator, providing complete electrical isolation, for the boiler and any external controls.

This boiler has been fitted with a supply cable, however, if it is necessary to fit a cable use PVC insulated cable not less than 0.75 mm² (24 x 0.2 mm) to BS 6500 Table 16. The boiler should be connected to a fused three pin plug and unswitched shuttered socket outlet (both complying with BS 1363), or a fused double pole switch with a contact separation of at least 3 mm in both poles.

Wiring external to the boiler must be in accordance with the current IEE Wiring Regulations (BS 7671).

Note: If a room thermostat is fitted, it must be suitable for 230/240 V switching.

3.3 AIR SUPPLY

The boiler does not require any air vents for cooling in the room in which it is installed or when installed in a cupboard or compartment. The minimum clearances for servicing must always be maintained.

Note: A cupboard or compartment used to enclose the boiler must be designed and constructed specifically for the purpose, i.e. comply with the Building Regulations.

3.4 FLUE SYSTEM - Fig. 3

The flue system must be installed in accordance with BS 5440:1.

For horizontal flues ensure that the Easy-Flue outer duct is installed horizontally (please note that the Easy-Flue inner duct already has a pre-determined slope towards the boiler for condensate to run back towards the boiler).

When additional flue extensions are used, ensure the flue slopes downwards towards the boiler by a minimum of 25 - 30 mm per metre of flue.

It is recommended that horizontal and vertical flue assemblies should be supported approximately every 1.5 m with access provided to the joints.

Flue components are available as follows:-

CD Easy-Flue 500 mm (includes 90° bend and terminal) - Part No. 6.2000510.
CD Easy-Flue 1000 mm (includes 90° bend and terminal) - Part No. 6.2001010.
CD 750 mm flue extension - Part No. 6.2000750.
CD 1000 mm flue extension - Part No. 6.2001050.
CD 100 mm flue support brackets (pack of 5) - Part No. 6.1000355.
CD 90° bend - Part No. 6.2000590.
CD 45° bend - Part No. 6.2000545.
CD Vertical flue terminal assembly. Refer to the separate installation instructions supplied with the assembly.

The following methods determine the correct length of flue required.

For rear exit flue (including terminal) L = B + 160 mm (205 mm if wall jig is used)

For side exit flue (including terminal) L = B + C + 245 mm (min. side clearance required is 5 mm)

For vertical flue L = H minus 1000 mm for vertical terminal assembly

Where L = Required flue length
B = Finished wall thickness
C = Distance from the inside wall to the side of the boiler
H = Distance from top of boiler side panel to roof position

Note:
1. If an extra 90° bend is used, this reduces the maximum flue length by 1.3 m. Each 45° bend used reduces the maximum flue length by 0.9 m.
2. Under no circumstances must the flue length (including allowances for extra bends) exceed 12 metres horizontally and only 14 metres vertically.
3. Failure to use Alpha CD flue components with the boiler will invalidate the boilers CE approval, guarantee and may be unsafe.
4. Further Plume management flue accessories are available - Refer to the Easy-Flue installation instructions.

HORIZONTAL FLUE OPTIONS - Lmax = 12 metres

(245 mm length includes terminal)

L = B + C + 245 mm

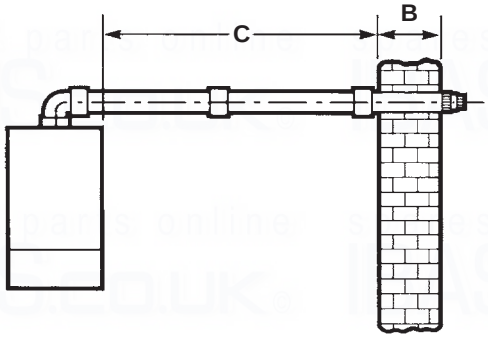

L = B + C + E + 245 mm

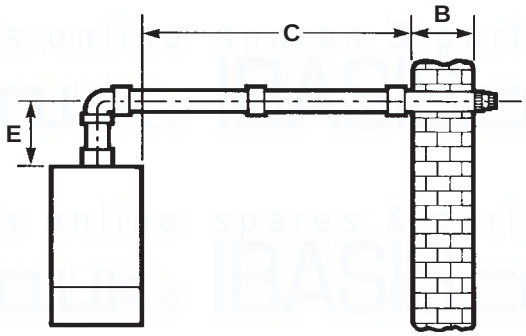

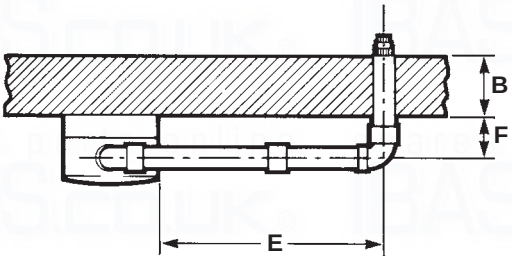

L = B + E + F + 245 mm + (90° bend = 1.3 metre)
(add 45 mm to 'F' if a jig is used)

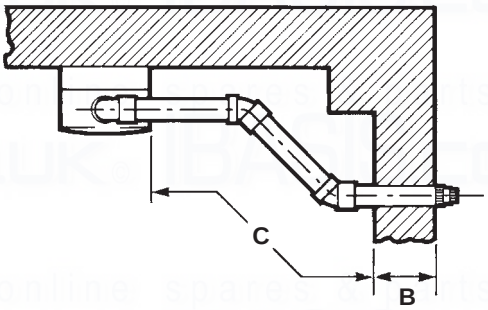

L = B + C + 245 mm + (2 x 45° bends = 1.8 metre)

VERTICAL FLUE OPTIONS

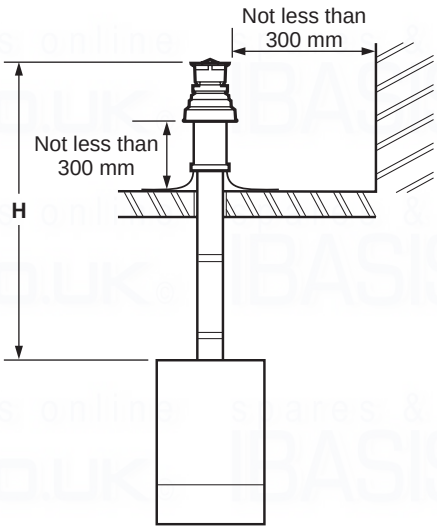

Hmax = 15 m

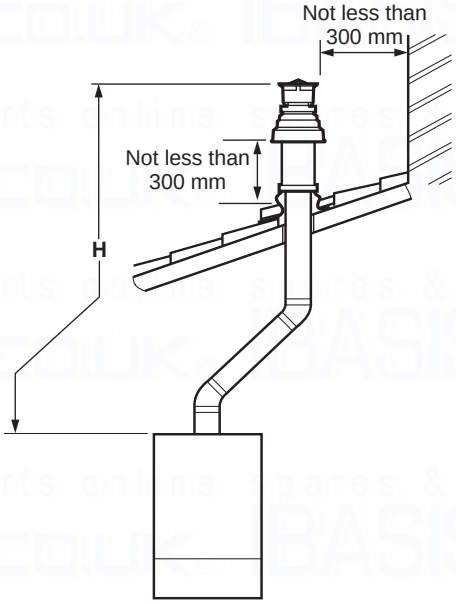

Hmax = 13.2 m

Fig. 3

3.5 FLUE TERMINAL LOCATION - Figs. 4 and 5

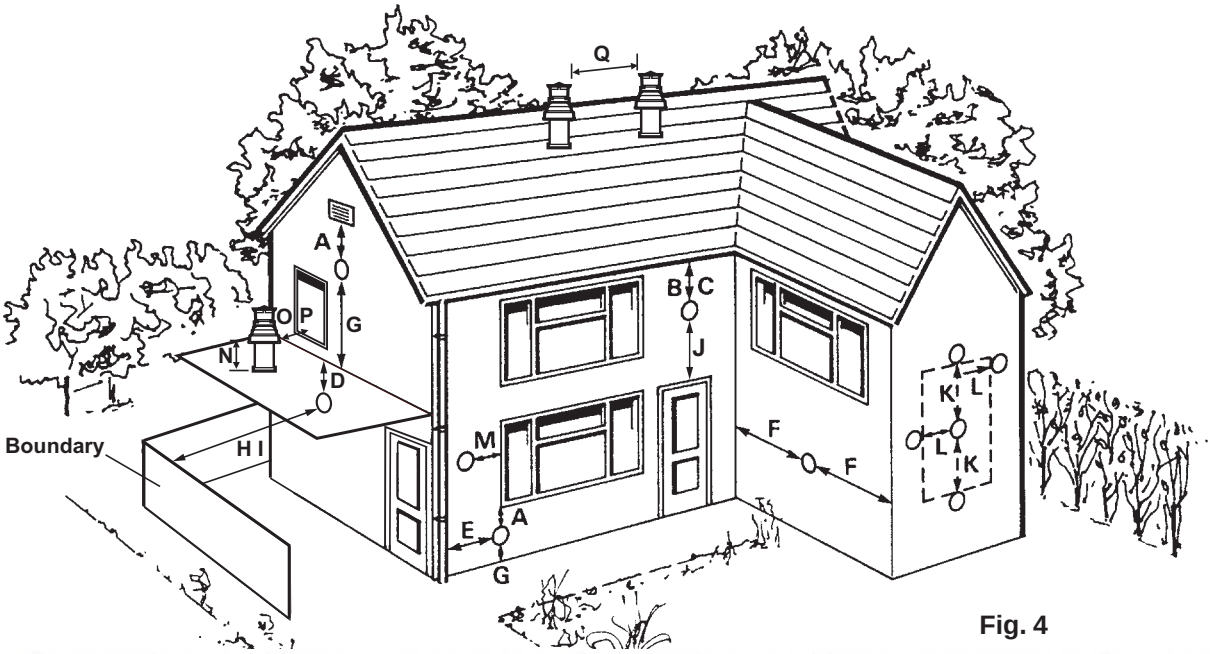

Fig. 4

	Terminal position	Min. distance (mm)
A	Directly below an opening, air brick, windows, etc.	300 (See Note 1)
B	Below gutters, soil pipes or drain pipes	75 (See Note 3)
C	Below eaves	200 (See Note 3)
D	Below balconies	200 (See Note 3)
E	From a vertical drain pipe or soil pipe	150 (See Note 3)
F	From an internal or external corner	300 (See Note 2)
G	Above ground, roof or balcony level	300
H	From a surface or boundary facing the terminal	600 (See Note 4)
I	From a terminal facing the terminal	1200 mm
J	Above an opening, air brick, window etc.	300 (See Note 1)
K	Vertically from a terminal on the same wall	1500 mm
L	Horizontally from a terminal on the same wall	300 mm
M	Horizontally from an opening, air brick, window etc.	300 mm (See Note 1)
N	Minimum protrusion through a roof	300 mm
O	From a vertical obstruction	300 mm
P	From an openable window	600 mm
Q	From an adjacent vertical terminal	600 mm

Notes:

1. In addition, the terminal should not be nearer than 150 mm to the framework of an opening into the building, i.e. a window surround or door surround.
2. This clearance may be reduced to 25 mm without effecting the performance of the boiler. However, to ensure the condensate plume does not affect adjacent surfaces a clearance of 300 mm is preferable.
3. These clearances may be reduced to 25 mm without effecting the performance of the boiler. However, to ensure the condensate plume does not affect adjacent surfaces the terminal can be extended beyond gutters, pipes, eaves, balconies etc. by upto 500 mm. If the flue is extended more than 500 mm outside, it should be boxed and insulated.
4. To reduce the possibility of nuisance to neighbouring buildings etc. it is recommended the terminal should not be less than 2500 mm from car parking spaces, building boundary walls, fences etc.
5. A terminal must not be sited under a car port roof.
6. In certain weather conditions the terminal will emit a plume of steam. If possible avoid positioning the terminal where this may cause a nuisance, i.e. positions A, D, G, H, J or M.
7. The flue terminal must be exposed to the external air and the position must allow the free passage of air across it at all times.
8. A terminal must not be sited below 2 m where people have access to, such as public footpaths, access routes, patios etc. However, If the terminal is fitted less than 2 m above a surface where there is no public access, the terminal must be protected by a terminal guard. A suitable guard is available from Alpha Therm Ltd.

Proximity of flue duct outlets to boundaries

The flue duct shall be sited so that it is at least 600 mm (see Fig. 5) from the boundary line when facing it and at least 300 mm from the boundary line when running parallel to it.

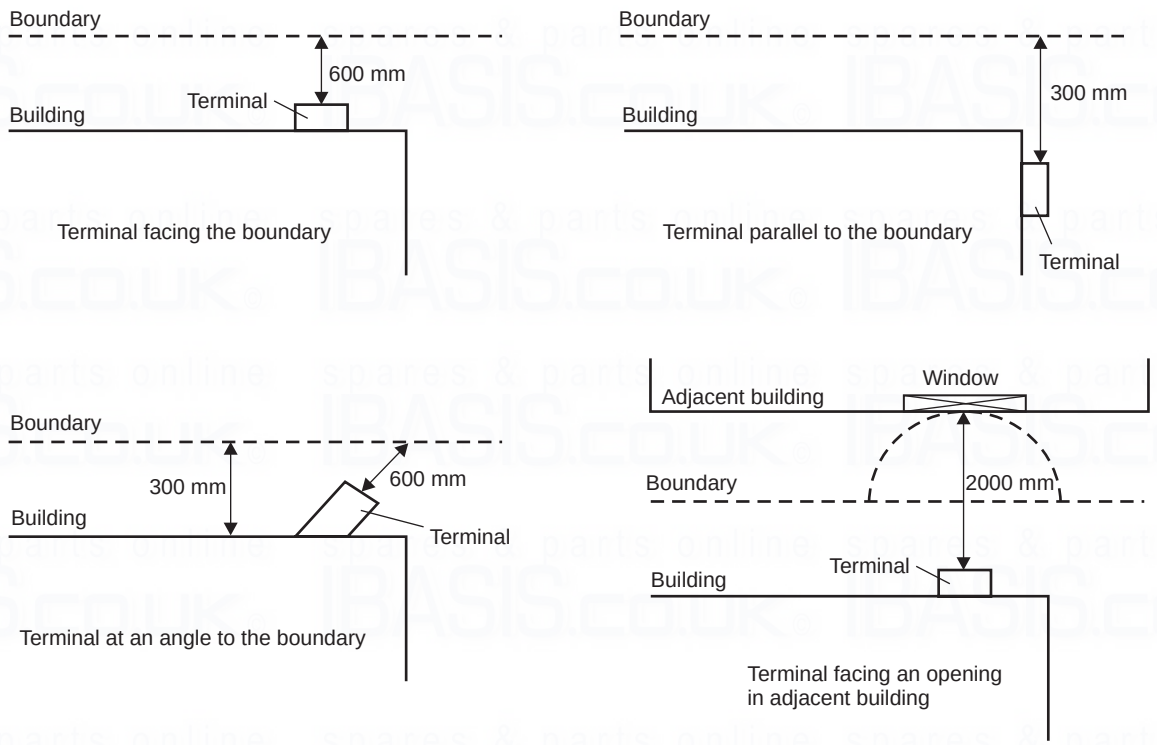

Fig. 5

3.6 BOILER LOCATION

The boiler is not suitable for external installation unless it is installed within a purpose designed weatherproof building.

The boiler must be installed on a flat vertical wall which is capable of supporting the weight of the boiler. The boiler can be fitted to or adjacent to a wall comprising of a combustible material without the need for a special thermal insulation barrier.

If the boiler is to be fitted in a timber framed building, it should be fitted in accordance with the Institute of Gas Engineers 'Guide for Gas Installations in Timber Frame Housing', reference IGE/UP/7.

The boiler may be installed in any room or internal space, although particular attention is drawn to the requirements of the current IEE Wiring (BS 7671) Regulations, and in Scotland, the electrical provisions of the Building Regulations applicable in Scotland, with respect to the installation of the boiler in a room or internal space containing a bath or shower. Where a room-sealed boiler is installed in a room containing a bath or shower, it must not be possible for a person using the bath or shower to touch any electrical switch or boiler control utilising mains electricity.

The boiler may be installed in a cupboard or compartment, provided it is correctly designed for that purpose, i.e. complies with the Building Regulations and the requirements of BS 6798.

3.7 CENTRAL HEATING SYSTEM - Fig. 6

The boiler is designed for use in a sealed central heating system in accordance with the requirements of BS 5449 and BS 6798.

The system should be designed to operate with flow temperatures of up to 82°C. When designing the system, the pump head, expansion vessel size, mean radiator temperature, etc. must all be taken into account. Refer to the pump performance table for guidelines.

System volume - The expansion vessel incorporated into the boiler is suitable for a sealed heating system with a maximum water content of 80 litres (18 gal). Above 80 litres, consideration should be given to fitting an additional expansion vessel fitted in the position shown in Fig. 6. To check correct operation of the expansion vessel(s) the system pressure should not be more than 2.5 bar when the system is at maximum operating temperature (for further guidance refer to BS 7074:1).

The boiler is supplied with the following components built in:-

Pressure relief valve - complying with BS 6759 and set to operate at 3 bar. The discharge pipe must be routed clear of the boiler and terminated in such a manner that it can be seen, but cannot cause injury to persons or property.

Pressure gauge - To indicate the system pressure to be maintained.

Expansion vessel - Conforming to BS 4814 with a capacity of 8 litres and pre-charged to a pressure of 1.0 bar.

By-pass - The boiler incorporates an automatic by-pass, therefore an automatic by-pass is not required for the system.

Cyclone - This is a device fitted in the heating return within the optional Premier Pack wall jig to remove any foreign or solid matter etc. from the system.

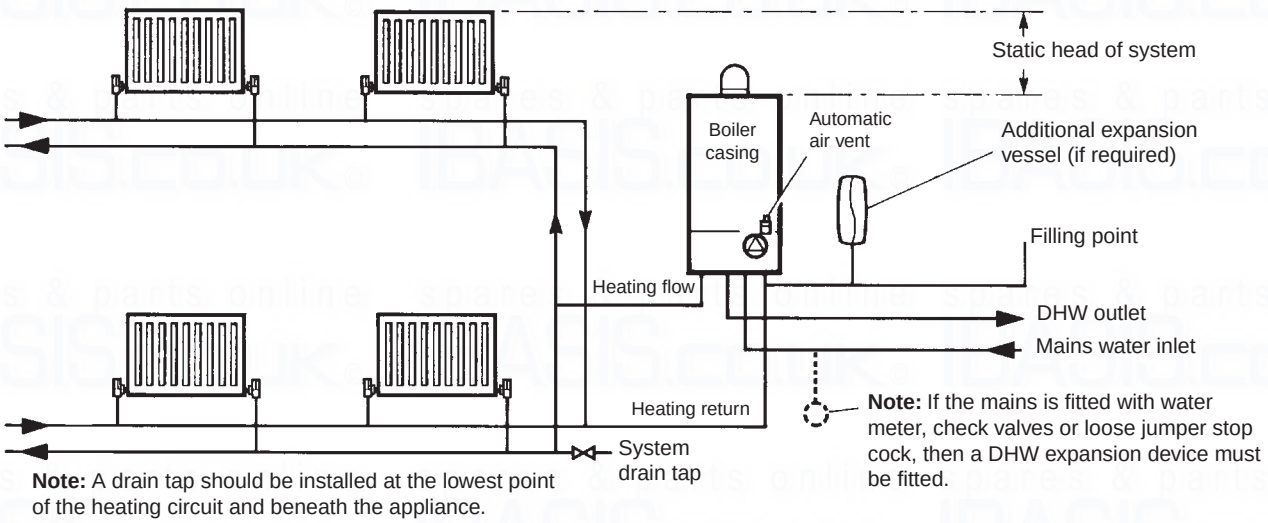

Fig. 6

3.8 FILLING THE CENTRAL HEATING SYSTEM - Fig. 7

The system design pressure (cold) should be set to 1.0 bar. This pressure is equivalent to a static head (see Fig. 6) of 10.2 metres of water.

Provision must be made for filling the system. This is done by the use of a filling loop. See Fig. 7.

A filling loop is factory fitted to the InTec C models but must be supplied by the installer for X models.

Filling of the system must be carried out in a manner approved by the local Water Undertaking. Where allowed, the system may be filled via a temporary connection as shown in Fig. 7. After filling, always disconnect the flexible hose of the filling loop.

All fittings used in the system must be able to withstand pressures up to 3 bar.

Drain taps (to BS 2879) must be used to allow the system to be completely drained.

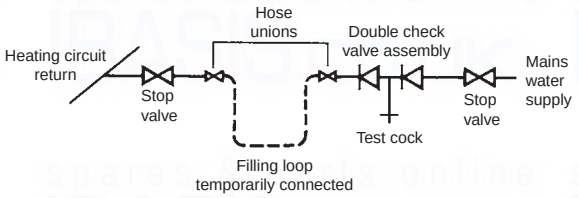

Fig. 7

3.9 FLUSHING THE HEATING SYSTEM

It is essential that the central heating system is thoroughly cleaned and flushed when fitting an Alpha InTec boiler. Failure to do so will invalidate the warranty.

The primary condensing heat exchanger is constructed in stainless steel and therefore is compatible with most materials used in a heating system.

If a cleaning agent and inhibitor are used, they must be applied in accordance with their manufacturers instructions. Only products from Fernox and Sentinel are acceptable for use with the Alpha InTec boilers. Further information can be obtained from Fernox (Tel: 0870 870 0362) or Sentinel (Tel: 0151 420 9563).

If the Cyclone is fitted in the heating return on the jig, the heating system should still be thoroughly flushed as detailed below. The Cyclone collection point should be emptied via the drain point (see Fig. 13b) after flushing has been completed.

The system should be flushed in accordance with BS 7593 and BS 5449. The following procedures are recommended:

1. Installing onto a new system:-
   a. Fill the system, vent at high points, at pump, primary heat exchanger and radiators.
   b. Check for leaks.
   c. Drain the system.
   d. If required, chemically clean the system as instructed by the recommended cleaner manufacturer.
      Note: Ensure that the system is flushed to remove any remains of the cleaner.
   e. If chemical cleaner is not used to clean the system:-
      i) Refill the system.
      ii) Switch on the boiler and allow the system to heat up to the normal operating temperature.
      iii) Switch off the boiler and drain the system while the water is still hot.
      iv) Refill the system and check for leaks.
   f. As required, add the recommended inhibitor to the system as instructed by the inhibitor manufacturer.
2. Installing onto an existing system, clean the system before fitting the new boiler:-
   a. If the old boiler is still working:-
      i) Switch on the boiler and allow the system to heat up to the normal operating temperature.
      ii) Switch off the boiler and drain the system while the water is still hot.
      iii) Refill and chemically clean the system as instructed by the recommended cleaner manufacturer.
      iv) Ensure the system is flushed to remove any remains of the cleaner.
      v) Fit the new boiler.
   b. If the old boiler is not working:-
      i) Drain the system.
      ii) Remove the old boiler.
      iii) Flush the system through.
      iv) Fit the new boiler.
      v) Refill and chemically clean the system as instructed by the recommended cleaner manufacturer.
      vi) Ensure the system is flushed to remove any remains of the cleaner and check for leaks.
   c. As required, add the recommended inhibitor to the system as instructed by the inhibitor manufacturer.

3.10 DISPOSAL OF CONDENSATE

Provision must be made for the safe disposal of condensate produced by the flue gases of the Alpha InTec boilers and reference should be made to BS 6798 for the requirements on the disposal of condensate.

The boilers incorporate a condensate trap which has a seal of 75 mm, therefore no additional trap is required.

The condensate should ideally be discharged internally into an internal waste pipe (washing machine/sink waste) or soil pipe to avoid the possible risk of freezing. The pipework must be in 22 mm pipe.

External pipe runs should be avoided, but if it is necessary, the pipework should be protected from the risk of freezing with waterproof insulation and the length should be kept to a maximum of 3 m and the condensate pipework should be increased to a minimum of 32 mm diameter. Termination should be into an external gulley or soakaway as shown in Figs. 8 and 9.

Note: All pipework must have a continuous fall (see Figs. 8 and 9) from the boiler and must be of an acid resistant material such as plastic waste pipe. (copper or steel is not suitable).

It should be noted that the connection of a condensate pipe to a drain may be subject to local building control requirements.

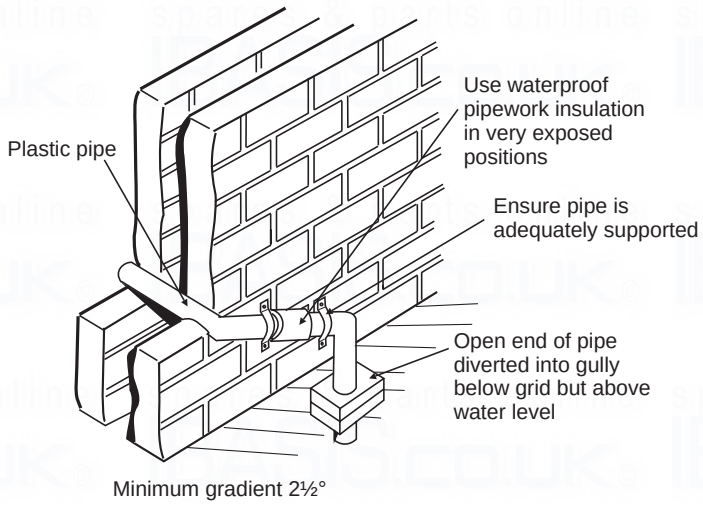

Fig. 8 - External gully

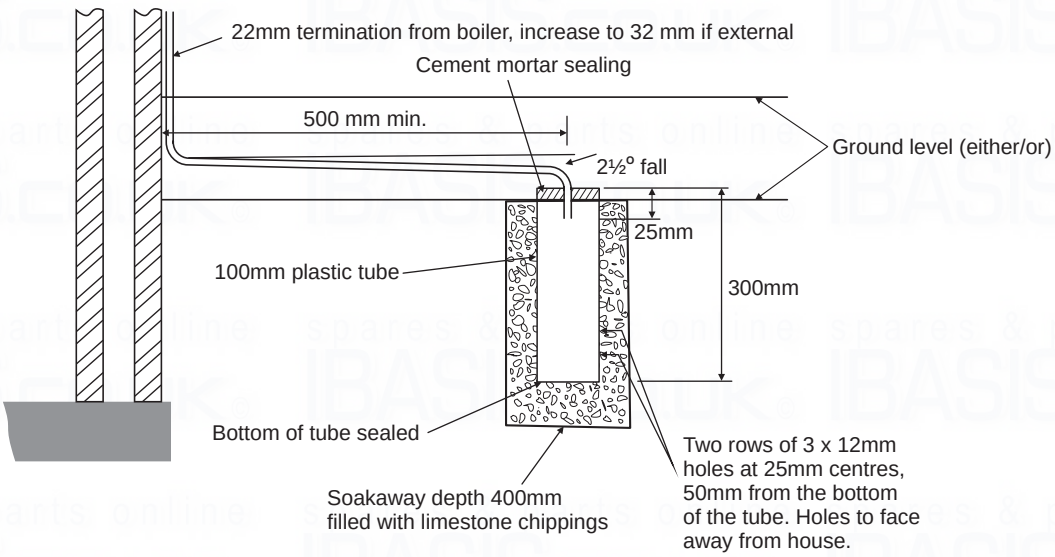

Fig. 9 - External soakaway

3.11 DOMESTIC HOT WATER SYSTEM

The minimum flow rate needed for the flow switch and burner to operate is 2.5 litres/min.

The incoming mains water pressure should be between 0.2 and 8 bar to ensure efficient operation. If the pressure is above 7 bar a pressure reducing valve must be fitted.

Following Part L Building Regulations, where the mains water hardness exceeds 200 parts per million, provision should be made to treat the feed water to the hot water circuit of combination boilers to reduce the rate of accumulation of limescale.

To ensure economic use, the pipe runs between the boiler and taps should be in 15 mm copper pipe and be as short as possible. Where possible the pipework should be insulated to reduce heat loss.

All taps and mixing valves used with the hot water system must be suitable for operating at a mains pressure of up to 8 bar.

Showers - A shower may be used with the boiler if required.
If a loose or flexible head type shower is used it may require the fitting of a double check valve, to comply with Water Bye Law 17.

Bidets - No anti-syphonage arrangements are necessary, provided the outlets are shrouded and it is not possible to attach a temporary hand held spray. A supply of direct mains fed hot and cold water is permitted provided the appliance is of the over-rim flushing type.

Before the mains water supply pipe is connected to the boiler, it should be thoroughly flushed out to avoid the danger of dirt or foreign matter entering the boiler.

Seasonality valve (C models only) - This valve maintains the hot water temperature (factory set) for both summer and winter conditions by automatically changing the flow rate through the boiler. However, if adjustment of the setting is required, refer to Section 5.6.2.

4 INSTALLATION

4.1 UNPACKING

1. The boxes required when the boiler is installed with a horizontal flue are as follows:-

   Box 1..... Cased boiler fitted with water and gas valves, union bends and washers
   Mounting bracket plus screws and wall plugs
   Condensate discharge pipe
   Literature pack and Wall template

   Box 2 ..... CD Easy-Flue 500 mm or CD Easy-Flue 1000 mm. Both include 90° bend and horizontal flue terminal
   Note: NOT required for vertical flue

   Notes: a. All flues must be suitable for CD condensing boilers.

   b. CD 750 mm and 1000 mm flue extensions are available, if required.

   Box 3 (if applicable) ..... Premier Pack includes: wall mounting jig with template, cyclone, bottom tray, earth bonding plate, spacers, pressure relief pipe terminal, split flow and return union bends, screw pack and fitting instructions.

2. Unpack boiler and remove the loose items packs and mounting bracket.

   Note: The boiler can be stood in an upright position, (to allow this, the union bends have been turned upwards so that they do not protrude beneath the bottom - check this before standing the boiler upright).

4.2 CLEARANCES REQUIRED - Fig. 10

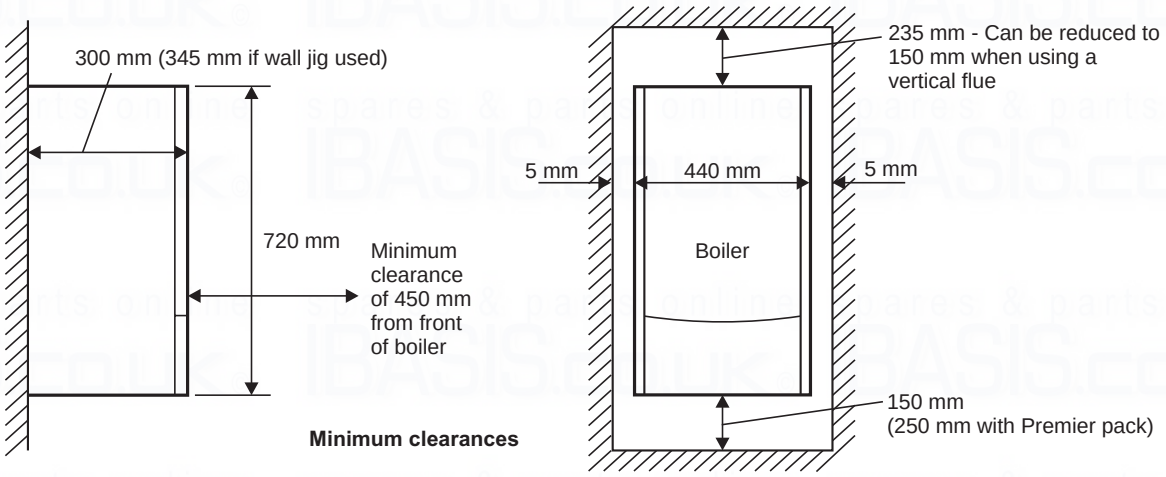

Fig. 10

4.3 PREPARE THE WALL - Fig. 11

If the optional wall jig is used refer to the instructions supplied with the kit.

1. Decide upon the position of the boiler taking into account the clearances required for servicing and the flue terminal position.
2. Tape the template to the wall (ensure it is level and the right way up) and mark the position of the holes for the boiler mounting bracket or, if applicable the wall jig fixings. If rear exit flue is used, mark the position of the hole for the flue.

   The wall jig is supplied with a pressure relief valve discharge pipe for use when the boiler is mounted on an external wall where the outside is inaccessible, if you wish to use this pipe - mark it's position.
3. **Side exit flue -** Continue the horizontal centre line of the flue across the wall to the side wall, then along the side wall 140 mm, 185 mm if the wall jig is used (ensure the lines are horizontal). This will give the position of the centre of the hole for the flue.

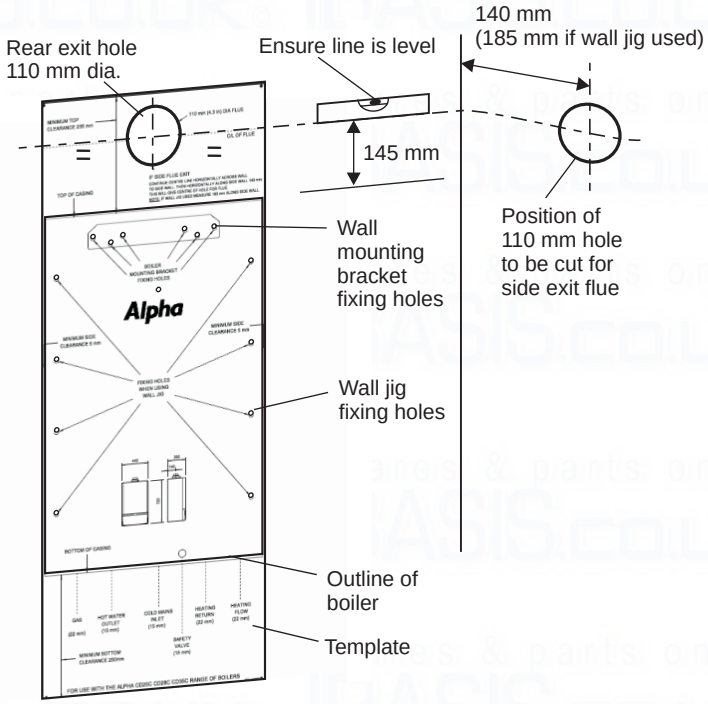

Fig. 11

4. Cut the 110 mm diameter hole (or use a 107 mm core drill) in the wall for the flue.
   Notes: 1. Ensure the hole is horizontal.
   2. For internal fitting of the flue, using the flue sealing collar supplied, cut a 130 mm dia. flue hole using a 127 mm core drill.
5. Drill the fixing holes (10 mm dia.) to accept the No.10 plugs supplied. Using the screws supplied, fit the mounting bracket or wall jig if used. If applicable drill a 22 mm dia. hole for the pressure relief valve discharge pipe terminal supplied with the jig.

IMPORTANT: If the wall jig is used, follow the instructions supplied with the Premier Pack to fit the jig, mount the boiler and connect the pipework.

4.4 FIT THE BOILER - Refer to Figs. 11 and 12

Lift the boiler and locate it on the mounting bracket.

Note: When handling or lifting always use safe techniques - keep your back straight, bend your knees, don't twist - move your feet, avoid bending forwards and sideways and keep the load as close to your body as possible.
Where possible transport the boiler using a sack truck or other suitable trolley.
Always grip the boiler firmly, and before lifting feel where the weight is concentrated to establish the centre of gravity, repositioning yourself as necessary.

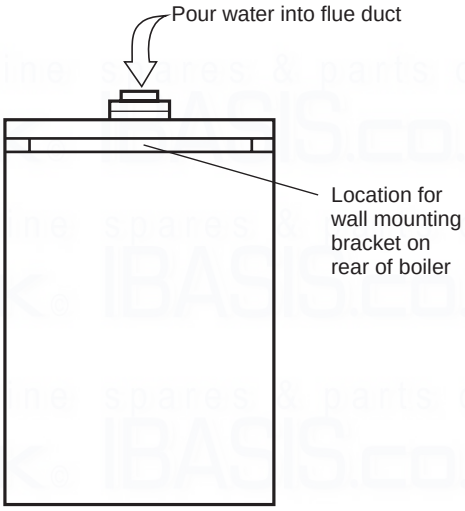

Fig. 12 - rear of boiler

4.5 CONNECT THE PIPEWORK - Fig. 13

1. Thoroughly flush out all the water pipework. Refer to Section 3.9.
2. The valves/fittings have been factory fitted, however, check that all the connections underneath the boiler have been tightened, especially the union bends.
   Note: If applicable the heating union bends supplied with the wall jig have been designed to enable the heating pipes to be routed from above and/ or below using the same fitting.
   Note: When soldering to the boiler union bends, ensure the bends are not connected to the valves, otherwise the internal seals may be damaged.
3. Connect the system pipework to the boiler. One metre of copper pipe must be fitted to the boiler before connecting to any plastic pipework.
   Note: Do not forget that the pressure relief valve discharge pipe must be routed clear of the boiler to a drain in such a manner that it may be seen, but cannot cause injury to persons or property.
4. Connect the 22 mm condensate trap drain pipe to the condensate discharge pipe using the clip supplied.
   Ensure that the condensate discharge pipe is as required in Section 3.10.
   Pour at least 0.5 litre of water into the flue duct, as shown in Fig. 12, and check the condensate discharge pipe for soundness.
5. Ensure that all the valves are closed (spindle flats at right angles to valve) and do not turn on the water or gas supplies at this stage.

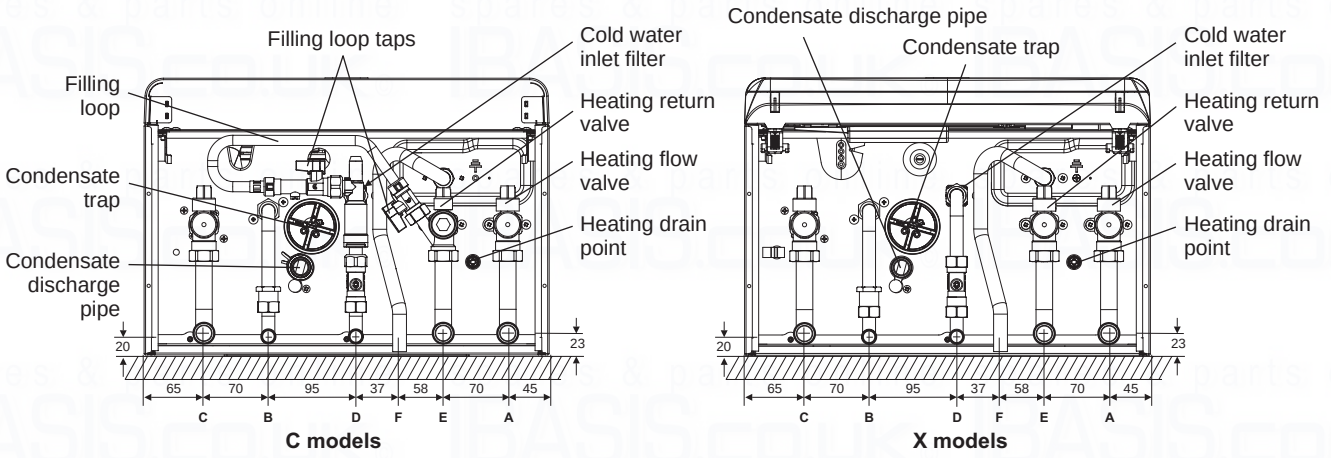

A - Heating flow (22 mm)
B - Hot water outlet (15 mm)
C - Gas inlet (22 mm)
D - Cold water mains inlet (15 mm)
E - Heating return (22 mm)
F - Pressure relief valve (15 mm)

Fig. 13a - Without wall jig

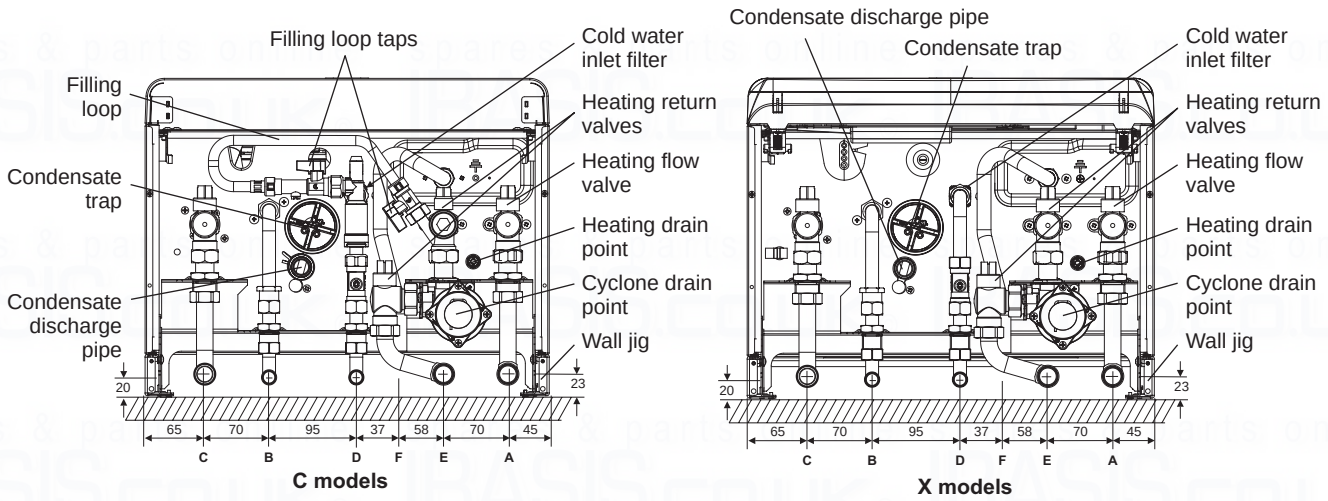

A - Heating flow (22 mm)
B - Hot water outlet (15 mm)
C - Gas inlet (22 mm)
D - Cold water mains inlet (15 mm)
E - Heating return (22 mm)
F - Pressure relief valve (15 mm)

Fig. 13b - With wall jig

4.6 FIT THE FLUE - Figs. 14 and 15

The following procedure applies to fitting an Alpha CD Easy-Flue to both rear or side exit flue - horizontally only.

1. The CD Easy-Flues are suitable for use in the flue length ranges shown in the tables below.
   Note: Where the length is less than the minimum or more than the maximum, refer to Section 4.7.

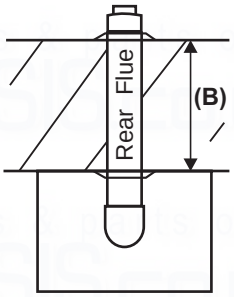

CD Easy-Flue	B (mm)	
	Max	Min
500 mm	525	300
1000 mm	970	760

Note: Add 45 mm to dimension B if the wall jig is used.

Fig. 14

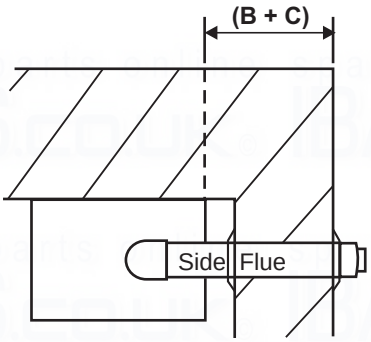

CD Easy-Flue	B + C (mm)	
	Max	Min
500 mm	440	215
1000 mm	885	675

Fig. 15

2. Determine the overall length (L) of flue required, (see Fig. 17) as follows:-
   Rear flue L = wall thickness (B) + 60 mm (105 mm if the wall jig is used)
   Side flue L = wall thickness (B) + distance between boiler and wall (C) + 145 mm

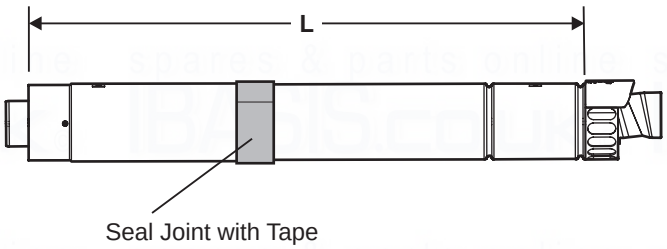

Fig. 16

3. Adjust the telescopic section of the flue to the distance 'L', ensuring that the two labels marked 'TOP' are aligned, then seal and secure the joint between the ducts with the sealing tape supplied.
   Note: Always ensure that there is a minimum overlap of 25 mm when fully extending the telescopic section.
4. Pass the flue assembly through the wall (from inside or outside).
   Note: Internal fitting - If there is no access to make good the outside wall, locate the outside (black) flue sealing collar onto the outer duct of the flue immediately before the terminal grille onto the location provided. Push the flue assembly through the 130 mm flue hole, so that the collar completely passes through the wall. Then pull the flue assembly back into the correct position. Visually check that the collar is sealing the outside wall and that it is not restricting any of the openings of the flue terminal.

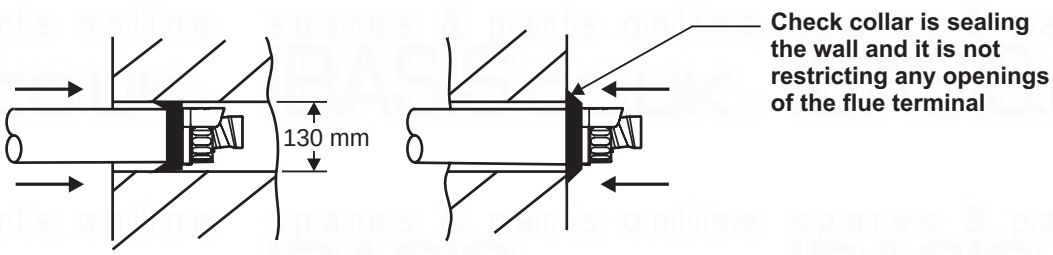

Fig. 17 - Fitting the flue from inside

5. Position the smaller Easy-Flue 40 mm clamp (with seal) supplied, over the bend. Fit the bend to the boiler and rotate to the correct position. Secure in position using the clamp. Ensure the clamp is located centrally over both the bend and boiler adaptor.
6. Fit the inside (white) flue sealing collar over the Easy-Flue. If it was not previously fitted, fit the outside (black) flue sealing collar onto the flue immediately before the terminal grille onto the location provided.
7. Slide the larger Easy-Flue 45 mm clamp over the outer duct and pull the flue assembly towards the bend, locating the inner duct into the seal joint on the bend. Ensure the labels marked 'TOP' are positioned at the top before securing the flue assembly to the bend with the clamp (three screws) located centrally over the joint.
   Note: Check the flue terminal protrudes 120 mm out of the wall and the inner duct of the terminal is positioned correctly (see Fig. 18).
8. Make good the inside wall by pushing the inside flue sealing collar upto the wall.

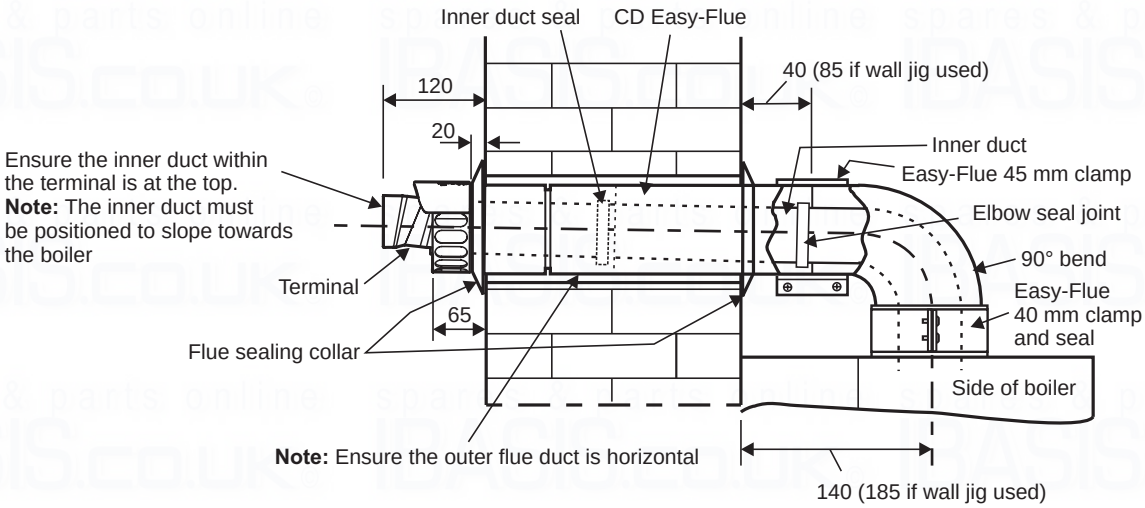

Fig. 18 - Rear flue

4.7 REDUCING THE FLUE - Fig. 19

When the flue length required is less than the minimum stated in Section 4.6, paragraph 1, refer to Fig. 19.

Discard the first telescopic section (**not** the section with the terminal) of the Easy-Flue 1000 mm or 500 mm and cut to the required length.

Note: Ensure that all cuts are square and free from burrs.
Once assembled with the components pushed home, the flue is fully sealed.

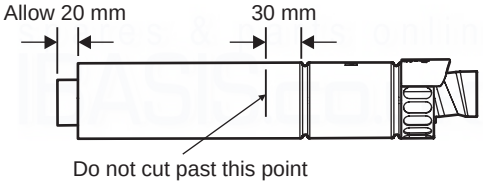

Fig. 19

4.8 EXTENDING THE FLUE - Fig. 20

Note: The flue assembly length must not exceed the maximum length stated, including the equivalent lengths of any extensions, bends etc, used for plume management components. **CD boilers must not exceed the maximum of an equivalent horizontal flue length of 12 m.**

1. When the flue length required is more than the maximum stated in Section 4.6, paragraph 1, refer to the table below and Figs 14 and 15.

Rear Flue length (B)	Side Flue length (B + C)	Comments
Up to maximum:- 11.885 m (Subtract 45 mm if the wall jig is used)	Up to maximum:- 11.805 m	Alpha CD 750 mm flue extension (Part No. 6.2000750) or 1000 mm extension (Part No. 6.2001050) is required to extend the range of telescopic flue. Refer to Section 4.8 for instructions on how to extend the flue. **Note:** A 130 mm flue hole (127 mm core drill) may be required in the wall. This is when the extended flue is passed through the wall.

Additional support brackets are required when extending the flue. These are available from Alpha, Part No. 6.1000355.

2. Use the template (supplied with the boiler) to mark the required flue position, ensure the slope towards the boiler is correct.
3. Determine the overall flue length as described in Section 4.6, paragraph 2 to determine the number of Alpha CD 750 or 1000 mm flue extensions required.
4. Assemble the flue extensions together by locating the inner duct into the seal joint and secure each extension together with the extension clamps supplied (three screws). Ensure that the clamps are positioned centrally over the joints.

   Note: If it is required to cut an extension, **DO NOT** cut the end of the inner duct that incorporates the seal joint. Ensure the inner duct end without the seal joint is cut so that it is 20 mm longer than the outer duct.
   Ensure that all cuts are square and free from burrs.
   Once assembled with the components pushed home, the flue is fully sealed.
5. Adjust the telescopic section of the Easy-Flue to the required length and secure the Easy-Flue with the sealing tape supplied. Fit the Easy-Flue to the extensions by locating the inner duct into the seal joint and secure with the clamp (three screws), ensuring it is located centrally over the joint.
6. Mark the end of the flue assembly 'TOP' where it is connected to the boiler, so that the 'TOP' of the flue terminal is aligned with the 'TOP' at the boiler end of the flue assembly.
7. Pass the complete flue assembly through the wall.
8. Position the smaller Easy-Flue 40 mm clamp (with seal) supplied, over the bend. Fit the bend to the boiler and rotate to the correct position and secure in position. Ensure the seal is located centrally over both the bend and boiler adaptor. If the inside sealing collar (white) is being used to make good the inside wall, then it will need to be fitted before assembling the flue.
9. Slide the larger Easy-Flue 45 mm clamp (two screws) over the outer duct and pull the flue assembly towards the bend, locating the inner duct into the seal joint on the bend.

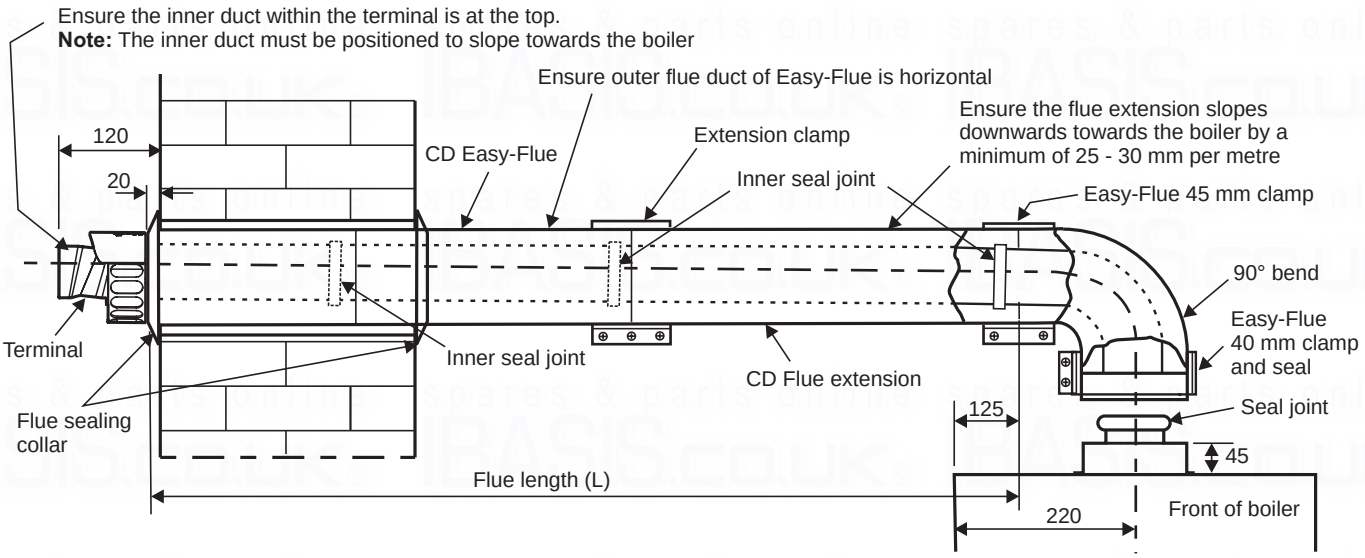

Fig. 20 - Side flue

10. Secure the flue assembly to the bend with the clamp ensuring it is positioned centrally over the joint, ensuring the 'TOP' marked on the outer duct is positioned at the top.

    Note: Check the flue terminal protrudes 120 mm out of the wall and that the inner duct of the terminal is positioned correctly, i.e. the inner duct within the terminal is at the top. See Fig. 20.

11. Make good the outside wall by fitting the outside sealing collar (black) onto the location provided immediately behind the flue terminal grille. Make good the inside wall using the inside sealing collar (white) if required.

4.9. FIT PLUME MANAGEMENT COMPONENTS - (OPTIONAL)

The following procedures detail the options for management of the exhaust flue gas/plume emitted from the terminal.

a. The terminal supplied with the Easy-Flue can be altered to divert exhaust flue gas/plume at an angle.

   This can be achieved by simply turning the end section of the terminal to the desired angle.

b. The CD Easy-Flue can be converted to allow the inner flue duct to be extended so as to position the terminal in an area where the exhaust flue gas/plume will not cause a nuisance. This can be done before or after installation of the flue, providing there is access to the terminal from outside.

   i. Remove the screws (1 in Fig. 21) securing the terminal and remove the terminal by pulling it from the flue assembly. Remove the screw (2 in Fig. 21) securing the terminal end section and remove the end section from the terminal.

   ii. Locate a 93° Plume Management bend into the flue assembly and rotate it to the direction required.

   iii. Connect to the 93° bend the required Plume Management components as detailed and refer to Fig. 22.

   Notes:

   1. The wall support brackets must be used to secure the Plume Management pipework to the wall and prevent disconnection of the 93° bend from the flue assembly or any other component.
   2. Each joint must be secured with one of the screws provided to prevent accidental disconnection.
   3. Ensure there is always a slight slope towards the flue assembly fitted in the wall and there is no part of the plume management pipework where condensate/rain will collect and cause a blockage or any restriction.

   iv. Terminate the Plume Management pipework by fitting the terminal end section (push-fit) previously removed. Refer to Fig. 22.

   v. The Plume Management components available for extending the inner flue duct are as follows:-

   Plume Management 93° bend 60 mm dia. (each 93° bend equivalent to 1.3 m flue length)
   Plume Management 45° bend 60 mm dia. (each 45° bend equivalent to 0.9 m flue length)
   Plume Management 1000 mm extension 60 mm dia. (equivalent to 1 m flue length)
   60 mm dia. wall bracket

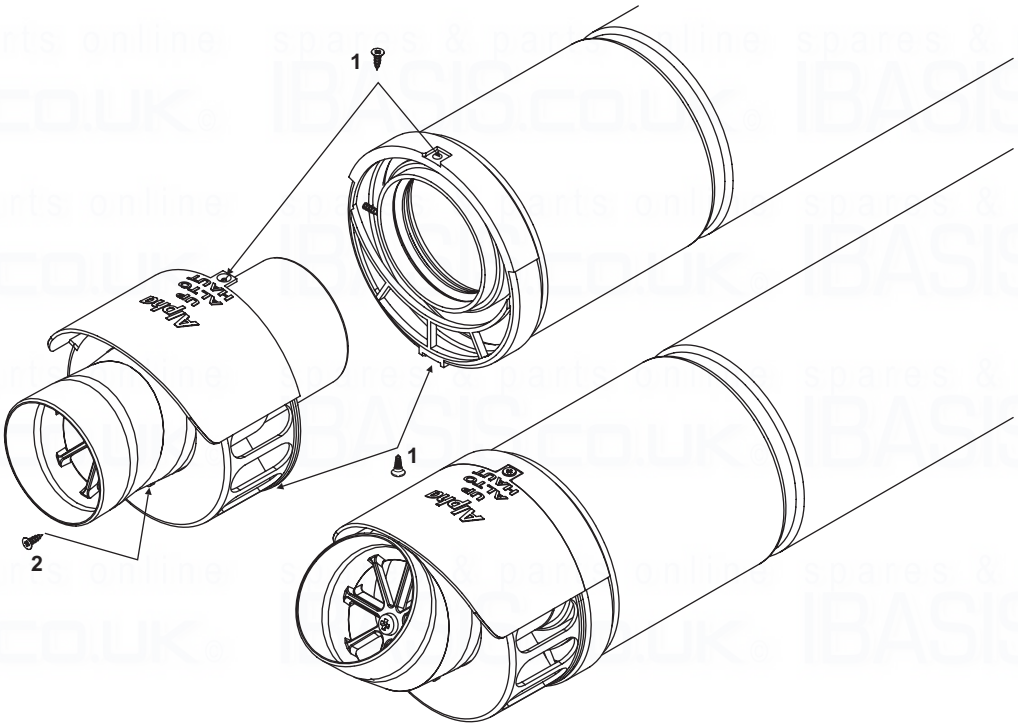

Fig. 21

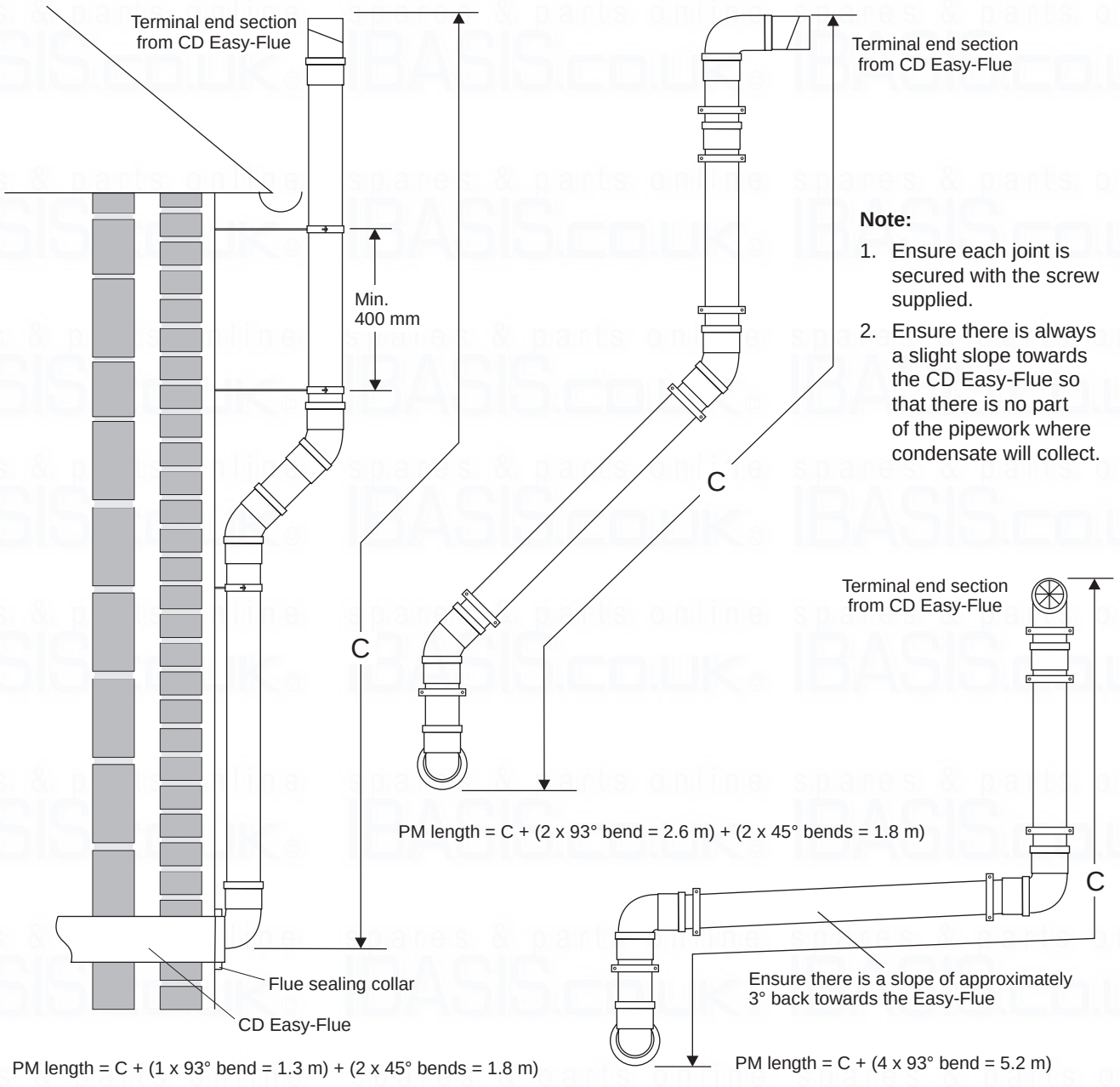

Note:

1. Ensure each joint is secured with the screw supplied.
2. Ensure there is always a slight slope towards the CD Easy-Flue so that there is no part of the pipework where condensate will collect.

Fig. 22

Note: The equivalent horizontal flue assembly length + the equivalent plume management length (PM length) must not exceed the maximum flue length stated for each boiler, i.e.

Alpha CD boiler maximum equivalent flue length must not exceed 12 metres.

4.10 CONNECT THE MAINS SUPPLY - Fig. 23

1. Gain access to the boiler terminal block by releasing the two fixing screws (one each side) securing the control panel and lowering the panel. Refer to Technical Data, Section 2.6 for connection details.
2. **Note:** This boiler has been fitted with a mains supply cable. However, if it is necessary to fit an alternative supply cable, ensure the cable clamp that has been fitted is removed and connect as follows:-
   Remove the three screws securing the terminal block cover from the back of the control box (see Fig. 23). Pass the mains supply cable through the cable clamp and connect as follows:- Brown to L, Blue to N and Green/ Yellow to ⏚. Ensure correct polarity.
   Note: Ensure that the length of the earth wire is such that if the supply cable is pulled out of its clamp the live and neutral wires become taut before the earth wire.
   The main terminal block can be removed by pulling it off the pins to give easy access to the terminals.
   Do not switch on the electrical supply at this stage.

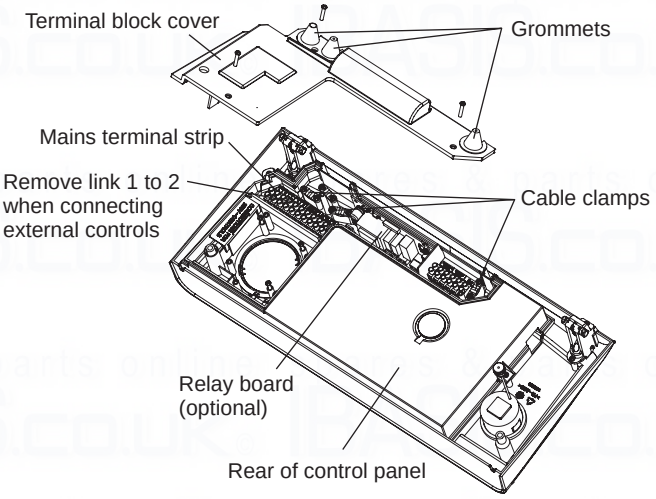

Fig. 23

3. If an external control, i.e. room thermostat or external clock is to be fitted, remove the terminal block cover and remove the link between terminals 1 and 2. Pass the cable through the cable clamp and connect it to terminals 1 and 2. Replace the terminal block cover. (Refer to Section 2.6).
4. Replace the terminal block, ensuring it is located correctly on the plastic pins and replace the cover.
5. Ensure that there is sufficient free cable to allow the control panel to be raised and lowered then tighten the cable clamp screws.
6. Leave the control panel open until commissioning procedures have been completed.
7. Carry out electrical system checks - Short circuit, Polarity, Earth continuity and Resistance to earth with a suitable multimeter.

4.11 FIT ALPHA CONTROLS (standard 240 V clock option) - Fig. 24

Ensure the electrical supply to the boiler is isolated.

Important: Only use the Alpha single channel controls. **Do not** fit any two channel controls.

1. Remove the three screws securing the terminal block cover at the rear of the control panel.
2. Remove and discard the blanking panel.
3. Insert the control into the opening and secure in place with the three screws supplied.
4. Remove the terminal block cover.
5. Disconnect the control wiring from the terminal block and connect it to the control as follows:-
   Blue wire to terminal 1, Brown wire to terminal 2 and Red wires to terminals 3 and 4, (or as per the instructions supplied with the control). Ensure wiring is correct.
6. Replace the terminal block cover. Do not overtighten the fixing screws.
7. Leave the control panel open until commissioning procedures have been completed.

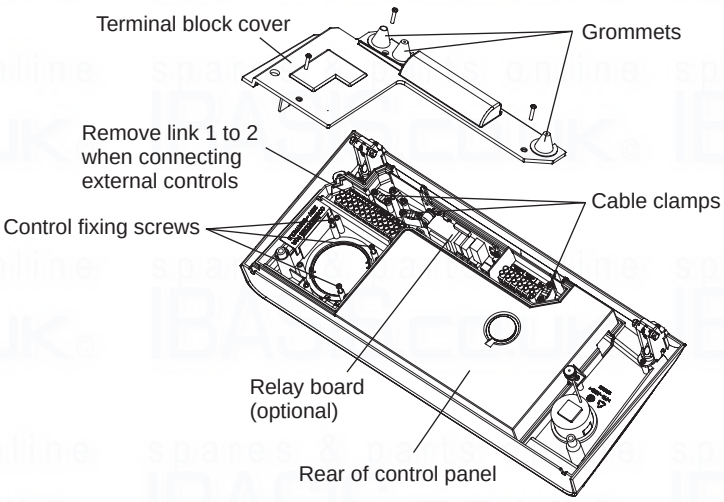

Fig. 24

5 COMMISSIONING

When commissioning the boiler, ensure the Benchmark Checklist at the back of these instructions is completed.

5.1 FILL THE SYSTEM

1. The boiler is fitted with an automatic air vent positioned on the pump (see Fig. 34), ensure that the vent is always open.
2. Open the central heating flow and return valves (vertical slot in-line with valve) (see Fig. 13).
3. Open the fill point valves on the filling loop until water is heard to flow.
4. To remove the air - Vent each radiator in turn, starting with the lowest in the system.
5. Vent air from the primary heat exchanger via the manual vent at the top left hand side (see Fig. 28).
6. It is important that the pump is properly vented to avoid it running dry and damaging its bearings. Unscrew and remove the cap from the centre of the pump. Using a suitable screwdriver rotate the exposed spindle about half a turn, then replace the cap.
7. Check the operation of the pressure relief valve (see Fig. 34) by turning the head anti-clockwise until it clicks. The click is the valve lifting off its seat allowing water to escape from the system - check that this is actually happening.
8. Continue to fill the system until the pressure gauge indicates 1.0 bar. Close the fill point valve and check the system for water soundness, rectifying where necessary. Disconnect the filling loop from the mains supply.
   Water may be released from the system by manually opening the drain point (see Fig. 34) until the system design pressure is obtained. The system design pressure (cold) should be between 0.75 and 1.25 bar.
   Refer to Sections 3.8 and 3.9. Filling and Flushing the system.
9. Open the cold water mains inlet valve (see Fig. 13). Turn on all hot water taps and allow water to flow until no air is present. Turn off taps.
10. Ensure that the condensate trap has been filled with water. Refer to Section 4.5, paragraph 4.

5.2 BOILER CONTROLS - Fig. 25

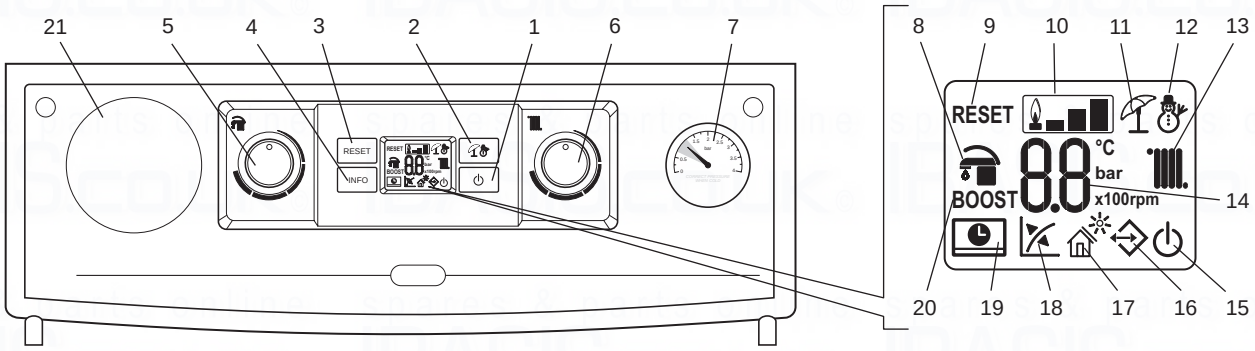

1 On-Off/Standby button
2 Summer/Winter button
3 Reset button
4 Information button
5 Domestic hot water temperature selector switch
6 Central heating water temperature selector switch
7 Heating system pressure gauge
8 DHW mode active
9 Boiler locked does not require reset via “RESET” button
10 Flame present symbol and relative power scale
11 Operating in summer mode
12 Operating in winter mode
13 Central heating mode active
14 Temperature indicator, boiler info and error codes
15 Boiler in Stand-by mode
16 Presence of external connected devices
17 Solar function active
18 Functioning with external temperature probe active (optional)
19 Boiler connected to remote control (optional)
20 Not used on this model
21 Optional boiler controls (if fitted)

Fig. 25

5.3 TEST FOR GAS TIGHTNESS AND PURGE THE SUPPLY

1. With the boiler gas service cock closed (slot at right angles to valve). Pressure test the gas supply and inlet pipework connection to the boiler gas service cock for tightness in accordance with BS 6891.
2. Loosen the gas inlet pressure test point screw on the gas valve (see Fig. 26). Ensure the gas supply is on and open the boiler service cock to purge in accordance with BS 6891.
3. Retighten the test point screw and test for gas tightness. Close the boiler gas service cock.

5.4 INITIAL LIGHTING - Refer to Fig. 25

1. Before turning on the gas and electrical supplies check the heating system is filled to the correct pressure. Refer to Section 5.1 Fill the System. The pressure gauge on the right of the control panel indicates the heating system pressure. When the boiler is cold the needle should be within the green band.
2. With the gas and electrical supplies to the boiler off, ensure that the mains water inlet valve and the central heating flow and return valves are open.
3. Turn on the gas and electrical supplies to the boiler.

   When the electricity supply is turned on, the boiler will automatically go through a system purging cycle for 8 minutes counting down from 96 on the display. This can be interrupted by pressing the RESET button (item 3 in Fig. 25). It is recommended that this cycle is allowed to complete when first lighting the boiler to help remove air from the system. After this the boiler will be in either Standby or On mode, the On-Off/Standby button (item 1 in Fig. 25) is used to scroll between these modes or press and hold it in to turn the boiler off.
   Note: This **does not** isolate the electricity supply to the boiler.
4. Ensure all external controls are calling for heat.

   If the optional controls are fitted, refer to the instructions supplied, and ensure they are in an 'on' mode.
5. Press the Summer/Winter button (item 2 in Fig. 25) to select either summer ( ) or winter ( ) mode.

   Summer ( ): In this mode the boiler will only fire when hot water is requested through opening a hot water outlet tap and the heating will not function even if requested by any controls. The desired hot water temperature can be set using the hot water selector switch (item 5 in Fig. 25) on the control panel, when the tap is open the display will indicate the actual primary flow temperature (item 14 in Fig. 25).

   Winter ( ): In this mode the boiler will function in heating and hot water depending on the request from any controls fitted. The boiler will always prioritise hot water when any hot outlet tap is opened. The heating will activate depending on the request from any external controls fitted. The domestic hot water (item 5 in Fig. 25) and central heating (item 6 in Fig. 25) selector switches on the control panel can then be turned to the required set temperatures shown on the display. The display will then display the actual primary flow temperature (item 14 in Fig. 25) when operating in heating or hot water.
   Note: If a weather compensation probe is fitted a gradient value of 1 to 9 is displayed when adjusting the central heating temperature selector switch. This is because the boiler output is modulated according to outside temperature. Refer to external probe instructions for further information on this feature.
6. From this moment the boiler functions automatically. With no demand for heat (central heating or domestic hot water production) the boiler goes to “standby” function.

   Each time the burner ignites, the flame present symbol (item 10 in Fig. 25) is displayed together with the relative strength of the flame.

For any controls fitted please refer to the instructions supplied with the controls for connection and operation details.

5.5 BOILER OPERATION

Domestic hot water supply always takes priority over central heating. If a demand for hot water is required during a central heating period, the boiler will automatically switch to the hot water mode until the demand is satisfied. This interruption in the central heating is only when the demand for hot water is present and should not be noticed by the User.

Central heating mode

If there is a call for heat, the pump will start to circulate the central heating water. The fan will run and the pre-mix burner will light. The burner output then automatically adjusts to suit the system demand; as the temperature of the water in the boiler approaches that set by the adjustable temperature thermostat, the burner output is reduced. When the set temperature is reached, the burner is turned off. The fan continues to run for 50 seconds and the pump continues to run for three minutes, after which the burner can relight if required. If the primary sensor has not registered the pre-set temperature but the room thermostat is satisfied the burner is turned off. The fan continues to run for 50 seconds and the pump continues to run for 60 seconds. In this instance there is no delay before the burner will relight.

If there is a demand for DHW during the burner delay, the boiler will operate to provide DHW until the tap is closed; the boiler will then immediately revert to provide CH if there is a demand.
Note: If the system pressure is very low, the primary pressure switch will prevent the boiler from operating.

Domestic hot water mode

When a demand for hot water (by opening a hot tap, etc.) is sensed by the flow switch, the pump starts and the burner lights, increasing immediately to its maximum output. Water in the boiler is then diverted from the central heating system to the domestic hot water heat exchanger, heating the incoming mains water. The burner output is varied to maintain the temperature of the hot water as that set by the adjustable temperature selector. When the flow switch senses that hot water is no longer required the burner is turned off and the boiler immediately returns to the central heating mode.

If the selector is set for hot water only - The burner is turned off, the fan will continue to run for 50 seconds and the pump will stop immediately.

In both modes the fan modulates according to the output required.

Frost Thermostat

The boiler incorporates a built in frost thermostat which automatically turns on the boiler and pump if the water in the boiler falls below 4°C, providing the electrical supply is on and the boiler is in standby mode. The boiler will operate until the water temperature in the boiler reaches 30°C.

Any other pipework outside of the boiler must be protected from the risk of freezing and insulated. Additional protection from an external frost thermostat and pipe thermostats should be considered.

Pump Cycle

If the electrical supply is on and the boiler has not operated for 24 hours in heating or hot water, the pump will operate automatically for thirty seconds every 24 hours.

5.6 CHECK THE BURNER PRESSURES - Figs. 26 and 27

Press and hold in the reset button for eight seconds and the boiler will fire at a fixed output depending on the position of the boiler central heating thermostat knob.

Turn the boiler central heating thermostat to maximum to check the maximum central heating burner pressure.

With the boiler central heating thermostat set to maximum fully open a hot tap to check the maximum domestic hot water burner pressure. In this mode the inlet gas supply pressure and CO/CO_2 ratio can be checked.

Refer to Technical Data, Section 2.1 and 2.2 for the required differential burner pressure values.

Note: The burner pressure settings have been factory set and should not require adjusting.

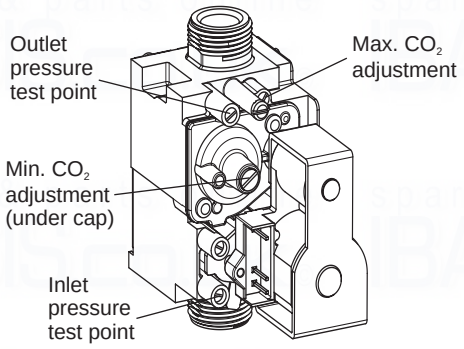

Fig. 26

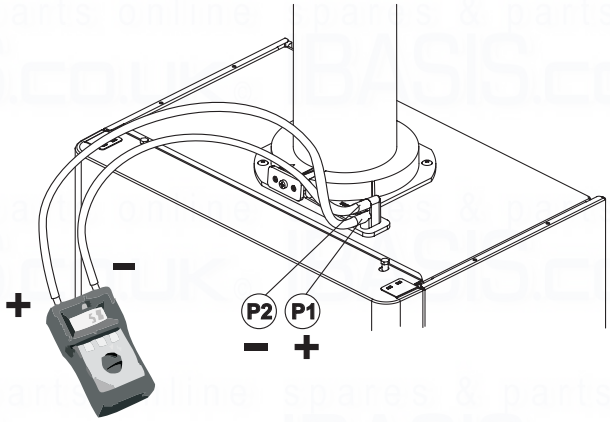

Fig. 27

5.7 FINAL COMMISSIONING

1. Allow the heating system to heat up, then balance the system to achieve the necessary temperature difference across the heating flow and return pipes at the boiler and check the system volume and pressure. (Refer to Technical Data, Sections 2.1, 2.2 and 2.3).
2. Seasonality valve (C models only) - The valve can be adjusted to the User's requirements, i.e. to the required temperature of hot water from the tap. This is achieved by fully opening a hot water tap and turning the adjusting screw (refer to Fig. 13a) with a screwdriver. Anticlockwise to increase the temperature and clockwise to decrease.
3. Turn off the boiler.
4. Thoroughly flush out the water pipework (refer to Section 3.9) and with no pressure in the boiler heating circuit, empty the cyclone (if applicable) at it's drain point (see Fig. 13) of any debris. Clean the mains water inlet filter (see Fig. 13).
5. Re-pressurise the system as described in Section 5.1.

5.8 FINAL ASSEMBLY

1. Raise the control panel and secure in position with the screws provided.
   Note: If the wall jig is used, fit the bottom tray over the base of the boiler.
2. If the boiler is to be left in service with the User, set the controls, clock (if fitted, see User's Operating manual) and room thermostat (if fitted) to the User's requirements.
3. If the boiler is not to be handed over immediately, close the boiler gas service cock and switch off the electrical supply.
4. If there is any possibility of the boiler being left during frost conditions, then the boiler and system should be drained (refer to Section 7.2). It is recommended that a label is attached to the boiler drawing attention to the fact that the system has been drained.
5. Complete the details of the installation in the Benchmark Checklist at the back of these instructions.

5.9 USER INFORMATION

The User must be advised (and demonstrated if necessary) of the following important points:-

1. How to light and turn off the boiler and how to operate the system controls.
2. The importance of annual servicing of the boiler to ensure safe and efficient operation.
3. That any servicing or replacement of parts must only be carried out by a Gas Safe registered engineer.
4. Ensure that the boiler controls and room thermostat (if fitted) are set to the User's requirements.
5. Tell the User about the sealed system pressure.
6. Tell the User that if the electrical supply is on and the boiler has not operated for 24 hours for heating or hot water, the pump will automatically operate for 30 seconds.
7. Explain to the User that an internal frost thermostat is fitted in the boiler, and that the electrical supply to the boiler must be left on for the thermostat to operate, i.e. the boiler must be set to standby.
8. Explain to the User that in certain weather conditions the terminal will emit a plume of steam, i.e. water vapour. This is safe and quite normal.
9. Show the User the position of the pressure relief valve and condensate discharge pipes.
10. Hand the User's instructions to the User.
11. Ensure the Benchmark Checklist at the back of these instructions has been completed after the boiler has been installed and commissioned.
    Note: It is a requirement that the installation is registered by the installer through the Gas Safe Gas Work Notification Scheme.
12. Leave these Installation and Servicing instructions with the User for use on future calls.

5.10 INFORMATION MENU

By pressing the info button (item 4 in Fig. 25) the information menu is accessed, this will then show the information according to the table below.

Info Menu (d - prefix)	Information	Units Shown
d1	Flame signal	μA x 10 (approx)
d2	Central heating water temperature leaving the boiler	°C
d3	Domestic hot water temperature leaving the boiler	°C
d4	Central heating set point temperature	°C
d5	Domestic hot water set point temperature	°C
d6	External weather compensation probe temperature (value flashes if negative)	°C
d7	Mains inlet temperature or FlowSmart cylinder temperature (if sensor fitted)	°C
d8	Not used	
d9	Fault history - by rotating the CH knob (item 6 in Fig. 25) in this menu the last five faults will be displayed	Error code

6 ROUTINE SERVICING

To ensure efficient operation of the boiler it is recommended that it is checked and serviced as necessary at regular intervals. The frequency of servicing will depend upon the particular installation conditions and usage, but in general once per year should be adequate.

It is the law that any service work must be carried out by a competent person, i.e. Gas Safe registered personnel.

Warning: Before servicing the boiler, isolate the electrical supply and close the boiler gas service cock. Allow the boiler to cool.

The data label is positioned on the inside of the left hand side panel.

Always test for gas tightness after servicing any gas carrying components.

Always carry out electrical system checks i.e. Earth Continuity, Resistance to Earth, Short Circuit and Polarity with a suitable meter before and after servicing.

General

Please Note: During routine servicing, and after any maintenance or change of part of the combustion circuit, the following must be checked:

1. The integrity of the flue system and the flue seals, as described in Section 4.6 and 4.7.
2. The integrity of the boiler combustion circuit and relevant seals.
3. The operational (working) gas inlet pressure at maximum rate, as described in Section 5.6.
4. The combustion performance, as described below.

Competence to carry out the check of combustion performance

Please Note: *BS 6798:2009 Specification for installation and maintenance of gas-fired boilers of rated input not exceeding 70 kW net* advises that:

1. The person carrying out a combustion measurement should have been assessed as competent in the use of a flue analyser and the interpretation of the results.
2. The flue gas analyser used should be one meeting the requirements of BS 7927 or BS-EN 50379-3 and be calibrated in accordance with the analyser manufacturers' requirements.
3. Competence can be demonstrated by satisfactory completion of the CPA1ACS assessment, which covers the use of electronic portable combustion gas analysers in accordance with BS 7967, Parts 1 to 4.

Combustion check

Connect the flue gas analyser to the flue gas sampling point as shown in Fig. 28.

Notes: 1. Prior to servicing, it is recommended that a flue gas analyser is used to measure the performance of the boiler (refer to Fig. 28 for the position of the flue sampling point). If the CO/CO_2 ratio measured is greater than 0.003 **or** when other checks and comments from the customer have indicated that there may be problems, cleaning of the heat exchanger will be necessary. All Sections 6.1, 6.2, 6.3 and 6.4 **must** be carried out. Repeat the flue gas analyser test after reassembling the boiler and check that the CO/CO_2 ratio is less than 0.003.

If the CO/CO_2 ratio reading is still above, then you must repeat Sections 6.1, 6.2, 6.3 and 6.4 until you obtain a ratio reading of below 0.003.

If the combustion reading is greater than the acceptable value <u>AND</u> the integrity of the complete flue system and combustion circuit seals have been verified and the inlet gas pressure (and gas rate) have been verified. Please call our Technical Helpline.

2. If the CO/CO_2 ratio measured is less than 0.003 and other checks and comments from the customer suggest there are no problems then only Section 6.1 and Section 6.2 paragraphs 1, 2 and 3 need to be carried out to allow a visual check of the components within the room sealed chamber.

3. If a flue gas analyser is not available, then all Sections 6.1, 6.2, 6.3 and 6.4 **must** be carried out.

6.1 IMPORTANT NOTES PRIOR TO SERVICING

1. Check the entire flue length and joints including the flue terminal outside. Ensure that all of the flue assembly has been installed correctly and there are no blockages.
2. Run the boiler and check the operation of its controls.
3. Refer to Fig. 28 for location of flue sampling point.
4. Ensure that all system connections and fittings are sound. Remake any joints and check the tightness of any fittings that may be leaking.
5. Refill, vent and re-pressurise the system as necessary. (Refer to Commissioning, Section 5.1).
   If the system pressure exceeds 2.5 bar when operating at maximum temperature, the heating expansion vessel should be checked and re-pressurised, if necessary.

   Note: 1. Check the expansion vessel charge only when the system pressure is zero.
   2. The expansion vessel pressure test point is accessible from inside the boiler at the front.
6. Check that the condensate trap drain pipe is connected and all joints are sound.
7. Record details of the service in the Service Record at the back of these instructions.

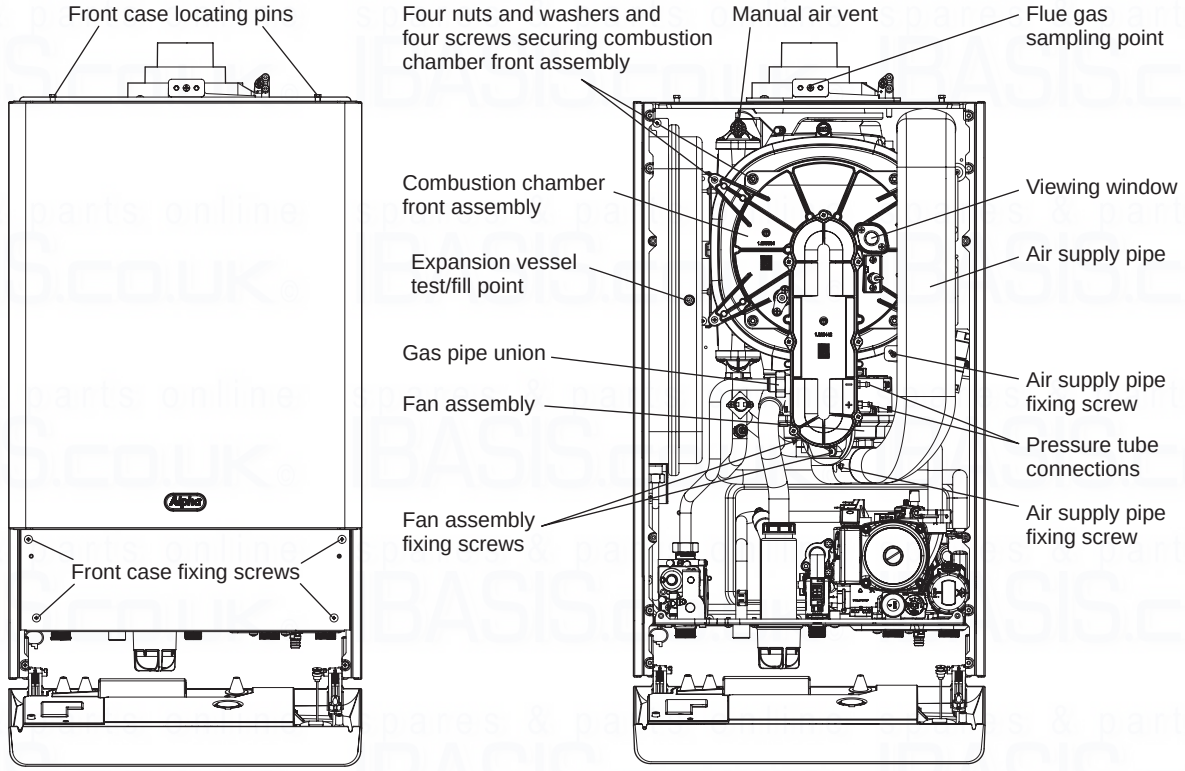

Fig. 28

6.2 PREPARE FOR SERVICING - Fig. 28

1. Ensure the electrical supply is isolated and the gas supply is off.
2. Unscrew the two screws securing the control panel and lower the panel.
3. Remove the four screws securing the front case. Lift the case up and forwards to remove.
4. Disconnect the gas supply pipe union from the manifold.
5. Remove the two screws securing the air supply pipe and remove the pipe.
6. Remove the two screws securing the fan assembly to the combustion chamber front.
7. Remove the two pressure tubes, noting their positions.
8. Disconnect the electrode lead from the ignition generator and the in-line connector to the flame sensing electrode.
9. Remove the four nuts and washers and four screws securing the combustion chamber front assembly and remove the assembly.

6.3 CLEANING THE BOILER

1. Remove any deposits from heat exchanger using a suitable soft brush. **Do not use a brush with metallic bristles.**
2. Check the condition of the combustion chamber insulation panels. Any damaged panels must be replaced. (Refer to Component Replacement, Section 7.19).
3. Check the condition of the burner injector on the combustion chamber front assembly, carefully clean them with a soft brush if necessary - Do not use a brush with metallic bristles as this might damage the injector.
4. Remove any deposits from the heat exchanger coils. This can be done by suction or water sprayed onto the coils. Ensure all electrical components are protected from water. Any water used to clean the heat exchanger will drain to the condensate trap.
5. Unscrew and replace the injector should it appear damaged.
6. Remove the four screws securing the burner (see Fig. 29) and remove the burner. Clean the burner with a soft brush and check that the flame ports are clear. Blockages may be removed with a stiffer brush. Tap the burner, open end down, to remove any deposits from inside.
7. Check the condition of the electrodes.
8. Check the spark gap, positioning and height of the electrodes, see Fig. 29.
9. Unscrew the condensate trap drain cap to remove any deposits.

   Note: Before removing the cap, ensure that the water released from the trap can be contained to avoid spillage. The trap will contain no more than 200 cc of condensate water. Replace the drain cap.

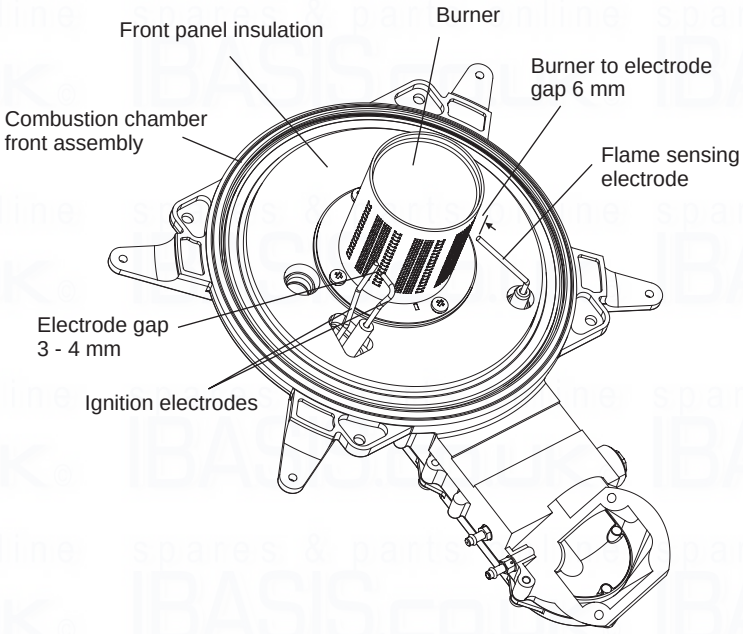

Fig. 29

6.4 RE-ASSEMBLE THE BOILER

1. Replace the burner, ensuring it is located correctly and secure it in position using the four screws previously removed.

   Important: Before replacing the combustion chamber front assembly, pour at least 200 cc of water into the coils of the heat exchanger. This is to ensure the condensate trap is full of water before operating the boiler.
2. Replace the combustion chamber front assembly, ensuring it is correctly located.
3. Re-connect gas pipe union, reconnect the electrode leads and refit the air supply pipe.
4. Test the connections for gas tightness and re-commission, Sections 5.3 and 5.7.
5. Place the front case panel in position and secure in position with the four screws previously removed, see Fig. 29.
6. Raise the control panel and secure in position with the two screws provided.
7. Check the operation of the boiler. (Refer to Sections 5.4 and 5.5).
8. Return all controls to their original settings.

7 COMPONENT REPLACEMENT

It is the law that any service work must be carried out by a competent person, i.e. Gas Safe registered personnel.

Warning: Before replacing any boiler components, isolate the electrical supply and close the boiler gas service cock. Allow the boiler to cool.

Always test for gas tightness after replacing any gas carrying components or disturbing any gas connections.

Always carry out electrical system checks i.e. Earth Continuity, Resistance to Earth, Short Circuit and Polarity with a suitable meter after servicing.

Check the operation of the boiler. (Refer to Sections 5.4 and 5.5).

Ensure that all the controls are returned to their original settings.

The replacement of components in Sections 7.3 to 7.16 does not require draining of the boiler.

7.1 GENERAL ACCESS - Fig. 28

Ensure the electrical supply is isolated and the gas supply is off.

1. **If access is required behind the control panel -** Lower the control cover flap (not X models) and remove the two control panel fixing screws (one each side) and lower the panel.
2. **To gain access behind the casing -** When the control panel is lowered, it exposes four fixing screws that secure the front cover. Remove these screws and lift the front cover off its locating pins at the top of the boiler.
3. **To gain access to the control panel components/PCB -** Remove the five screws securing the rear cover and carefully raise the cover. When replacing the cover, ensure no wires are trapped and all wiring is secured. Secure with five screws - do not overtighten.

7.2 DRAINING THE BOILER - Figs. 2, 13

Isolate the electricity supply and close the boiler gas service cock, see Fig. 13. Allow the boiler to cool.

1. **Heating circuit**
   Close the central heating flow and return valves, see Fig. 13.
   Connect a suitable pipe to the drain point, see Fig. 13 and route it to a suitable container. Open the drain point.
2. **Hot water circuit**
   Close the mains water inlet valve, see Fig. 13.
   Open any hot tap below the level of the boiler to allow as much draining as possible.

Note: Some water will remain in the components and care must be taken when removing them.

7.3 ELECTRODES - Fig. 30

Gain access behind the room sealed chamber panel as in Section 7.1.

1. **Ignition electrode and lead**
   Remove the two screws securing the air inlet pipe and remove the pipe.
   Disconnect the lead from the ignition generator, noting its position.
   Remove the two screws securing the electrode to the front of the combustion chamber and carefully withdraw the electrode.
2. **Flame sensing electrode and lead**
   Disconnect the flame sensing electrode in-line connector.
   Remove the two screws securing the electrode to the front of the combustion chamber and carefully withdraw the electrode.

Re-assemble in reverse order

7.4 MAIN BURNER - Fig. 29

1. Remove the burner assembly as described in Routine Servicing, Section 6.2.
2. Remove the four screws securing the burner to the combustion chamber front assembly.
3. Re-assemble with a new burner as described in Routine Servicing, Section 6.4.

7.5 BURNER INJECTOR - Fig. 28

1. Gain access to the room sealed chamber as described in Section 7.1.
2. Undo the gas pipe union to the combustion chamber front to gain access.
3. Unscrew the damaged injector and screw in a replacement.
4. Re-assemble in reverse order.

7.6 FAN - Fig. 28

1. Gain access behind the room sealed chamber as described in Section 7.1.
2. Remove the two screws securing the air supply pipe (see Fig. 28) and remove the pipe.
3. Unplug the fan plug and remove the two screws securing the fan to the combustion chamber front (see Fig. 28).
4. Withdraw the fan to the right of the boiler - this can be made easier if the right hand side panel is removed.
5. Remove the air inlet elbow from the old fan and fit it to the new one.
6. Re-assemble in reverse order ensuring that the pressure tubes are connected correctly.
7. Test the boiler as described in Routine Servicing, Section 6.4 paragraphs 5 to 9.

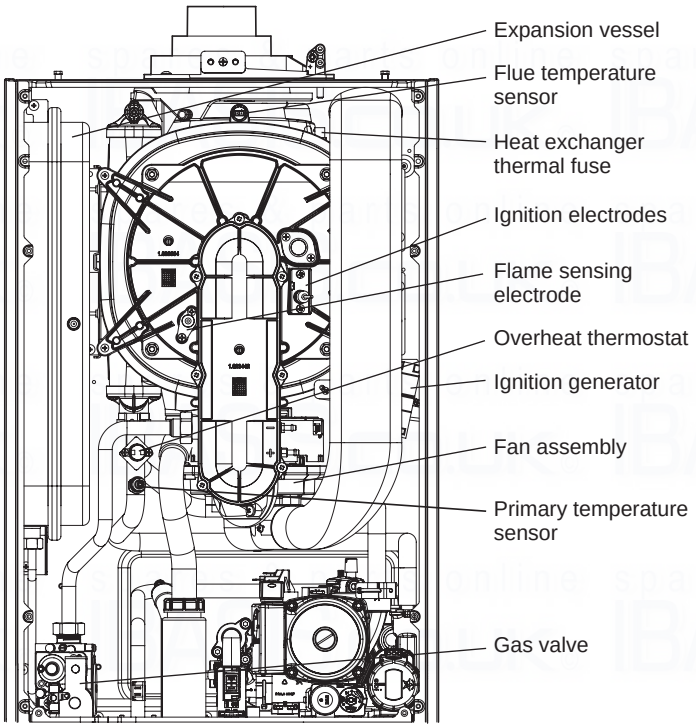

Fig. 30

7.7 IGNITION GENERATOR - Fig. 30

1. Gain access behind the front panel as described in Section 7.1.
2. Remove the screw securing the air supply pipe (see Fig. 28) and remove the pipe.
3. Disconnect all the wires from the ignition generator.
4. Loosen the two screws securing the generator - slide it downwards to remove.
4. Slide the new generator in position, tighten the screws and re-connect the wires.
5. Re-assemble in reverse order.

7.8 OVERHEAT THERMOSTAT - Fig. 30

1. Gain access behind the front panel as described in Section 7.1.
2. Disconnect the wiring from the overheat thermostat.
3. Remove the two screws securing the overheat thermostat and remove it from the flow pipe.
4. Fit the new overheat thermostat and re-assemble in reverse order.

7.9 FLUE TEMPERATURE SENSOR - Fig. 30

1. Gain access behind the front panel as described in Section 7.1.
2. Disconnect the wiring.
3. Using a 13 mm spanner, turn the sensor 90° anti-clockwise and withdraw it from the heat exchanger.
4. Fit the new sensor and re-assemble in reverse order.

7.10 GAS VALVE - Fig. 30

Note: The replacement of the gas valve or PCB must be carried out by a Gas Safe registered engineer with the use of a flue analyser.

1. Gain access behind the front casing as in Section 7.1.
2. Disconnect the positive pressure tube from the gas valve.
3. Disconnect the electrical plug.
4. Disconnect the burner manifold pipe union and the gas inlet pipe union.
5. Remove the two screws from beneath the boiler and lift out the valve assembly.
6. Fit the new assembly and re-assemble in reverse order and test for gas tightness.
7. Light the boiler. (Refer to Commissioning, Section 5.4) and adjust the gas valve as described in the instructions supplied with the replacement valve.
8. Complete re-assembly as described in Routine Servicing, Section 6.4 paragraphs 5 to 9.

7.11 FUSE - Fig. 31

The fuse is located on the PCB.

1. Gain access as described in Installation, Section 4.8.
2. Lift out and remove the fuse. Fit a 3.15 AF fuse as a replacement.
   Note: A spare fuse is supplied, as shown in Fig. 31.
3. Re-assemble in reverse order.

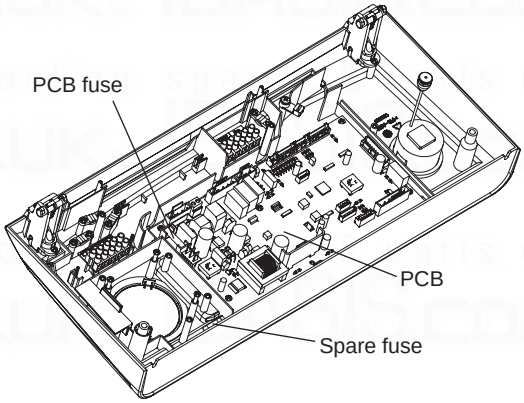

Fig. 31

7.12 PCB - Fig. 31

Note: The replacement of the gas valve or PCB must be carried out by a Gas Safe registered engineer with the use of a flue analyser.

1. Gain access behind the control panel as described in Section 7.1.
2. Disconnect all the wiring connectors from the PCB.
3. Remove the five fixing screws and carefully withdraw the board from the switch spindles.
4. Re-assemble in reverse order. Refer to the wiring diagram in Section 8.1 for connections.
5. Light the boiler and adjust the PCB as described in the instructions supplied with the replacement PCB.

7.13 DIVERTER VALVE MOTOR - Fig. 32

1. Gain access behind the front casing as described in Section 8.1.
2. Remove the diverter valve motor head by unplugging its electrical connection and withdrawing the retaining clip upwards from the back of the motor.
3. Withdraw the motor forwards from the valve body.
4. Re-assemble in reverse order with a new motor.

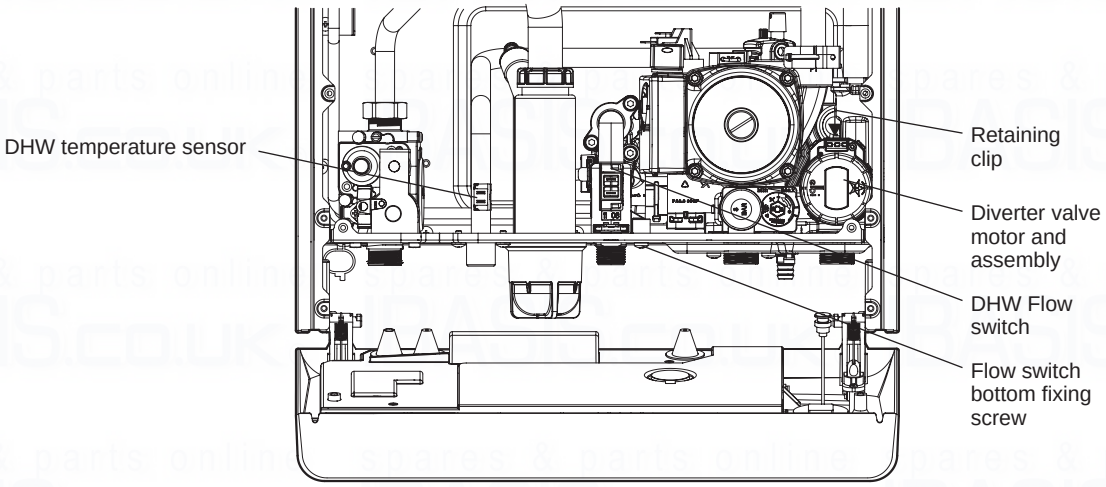

Fig. 32

7.14 ALPHA CONTROLS (if fitted) - Fig. 24

Note: For replacement only use an Alpha single channel control. **Do not** fit a two channel control.

1. Gain access behind the control panel as described in Section 7.1.
2. Remove the three screws securing the terminal block cover at the rear of the panel.
3. Disconnect the wiring from the control.
4. Remove the three control retaining screws and withdraw the control from the panel.
5. Fit the new control, and connect the wires as follows:-

   Blue to terminal 1, Brown to terminal 2 and Red wires to terminals 3 and 4, (or as per the instructions supplied with the control).
6. Re-assemble in reverse order. Refer to the User's instructions and the boiler's control cover to set the control.

7.15 DHW TEMPERATURE SENSOR - Fig. 32

1. The DHW sensor is positioned in the hot water outlet pipe to the left of the flow switch, see Fig. 34. Unplug the two connections and unclip the sensor from the pipe.
2. Re-assemble in reverse order with a new sensor.

7.16 COMBUSTION CHAMBER INSULATION

Gain access to the combustion chamber as described in Section 7.1.

Front panel insulation - Fig. 29

1. Remove the electrodes from the combustion chamber front as described in Section 7.3.
2. Remove the four screws securing the burner.
3. Carefully remove the insulation.

Back panel insulation - Fig. 33

1. Remove the combustion chamber front/burner assembly.
2. Carefully remove the insulation, suction applied to the centre of the insulation will aid this.

Fit a new panel and re-assemble in reverse order.

7.17 HEAT EXCHANGER THERMAL FUSE - Fig. 33

Note: If the thermal fuse has failed or operated, the heat exchanger **must** be replaced. Do not attempt to remove the thermal fuse. Disturbing the sealant securing the thermal fuse will invalidate the warranty.

1. Gain access behind the front casing as described in Section 7.1.
2. Disconnect the wire from the thermal fuse and remove the heat exchanger as described in Section 7.19.
3. Fit a new heat exchanger and re-assemble in reverse order.

7.18 DHW FLOW SWITCH - Fig. 32

1. Gain access behind the front casing as described in Section 7.1.
2. Isolate the mains water supply and open all hot taps to drain any water from the boiler.
3. Disconnect the wires from the switch.
4. Undo the union nut and remove the fixing screw from the bottom of the switch.
5. Remove the two 4 mm socket head capscrews securing the top switch and lift out the switch.
6. Fit the new switch and re-assemble in reverse order.

7.19 PRIMARY HEAT EXCHANGER - Figs. 30, 33

1. Gain access behind the room sealed chamber panel as described in Section 7.1 and drain the boiler heating circuit as described in Section 7.2.
2. Remove the burner as described in Section 6.2 (Routine Servicing).
3. Unplug the connections from the flue temperature sensor and thermal fuse, see Fig. 30.
4. Disconnect the condensate drain pipe by pulling its rubber connector from the heat exchanger.
5. Remove the screws securing the ignition generator bracket, disconnect the earth lead and remove the ignition generator.

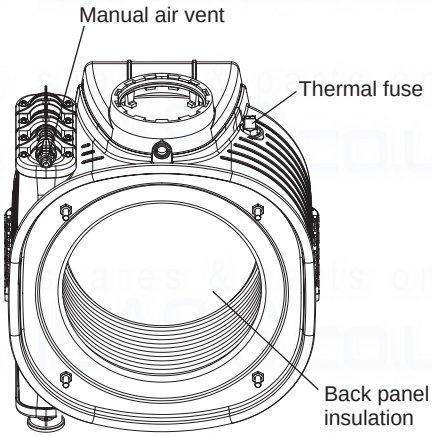

Fig. 33

6. Unplug the fan and remove it from the boiler.
7. Remove the heating flow and return pipe-retaining clips from the primary heat exchanger and pull the pipes downwards from the heat exchanger connections.
8. Slide the heat exchanger downwards and forwards to disconnect from the flue connection and withdraw it from the boiler.
9. Re-assemble in reverse order, ensuring that new seals are used.
   Lubricating the seals with soap and water will aid assembly.
10. Refill, pressurise the system and vent the air from the heat exchanger using the manual air vent. (Refer to Commissioning, Section 5.1).

7.20 PRESSURE GAUGE - Fig. 34

1. Gain access behind the casing and drain the boiler heating circuit as described in Sections 7.1 and 7.2.
2. Withdraw the retaining clip securing the pressure gauge sensor (just to the left of the automatic air vent) and withdraw the sensor.
3. Remove the main cable grommet in the bottom panel and remove the sensor tube.
4. Depress the two lugs on the pressure gauge and push it out of the control panel.
5. Fit the new gauge using a new 'O' ring on the connection if necessary.
6. Refill and pressurise the system. (Refer to Commissioning, Section 5.1).

7.21 PRIMARY TEMPERATURE SENSOR - Fig. 30

1. Gain access as described in Section 7.1 and drain the heating circuit described in Section 7.2.
2. Disconnect the wiring and unscrew the sensor. Re-assemble in reverse order with a new sensor and sealing washer.
3. Refill and pressurise the system. (Refer to Commissioning, Section 5.1).

7.22 AUTOMATIC AIR VENT - Fig. 34

1. Gain access behind the front casing and drain the boiler heating circuit as described in Sections 7.1 and 7.2.
2. Turn the automatic air vent anticlockwise and lift it out
3. Insert the new air vent using a new washer and turn it clockwise to lock it in position.
4. Refill and pressurise the system. (Refer to Commissioning, Section 5.1).

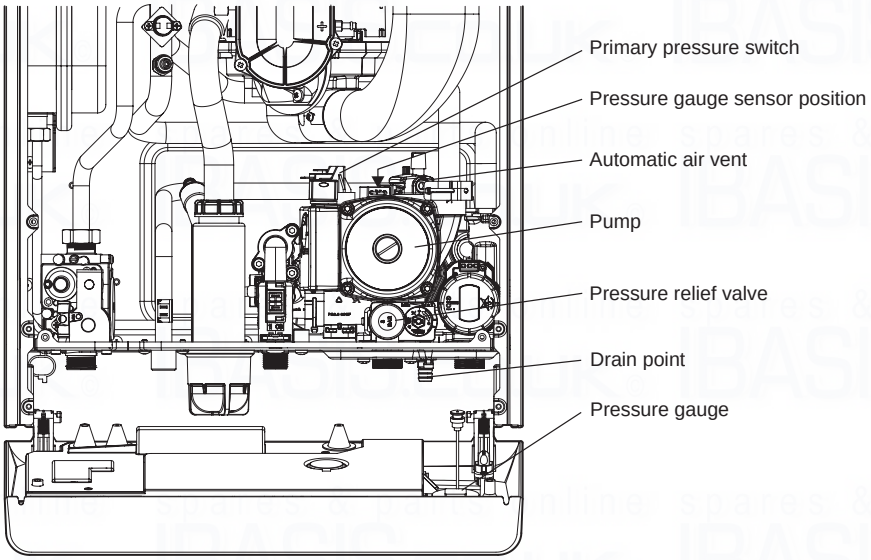

Fig. 34

7.23 PUMP - Fig. 34

Gain access behind the front casing and drain the boiler heating circuit as described in Sections 7.1 and 7.2.

Pump head

1. Using a 4 mm Allen key remove the four socket head screws securing the pump head to the body. Withdraw the head and disconnect the plug.
2. Connect the plug to the new head. Ensure the pump is set to maximum (3) and re-assemble in reverse order.
3. Refill and pressurise the system. (Refer to Commissioning, Section 5.1).

7.24 PRIMARY PRESSURE SWITCH - Fig. 34

1. Gain access behind the front casing and drain the boiler heating circuit as described in Sections 7.1 and 7.2.
2. Disconnect the wiring from the pressure switch.
3. Withdraw the retaining clip on the left side of the switch and lift the switch upwards to remove.
4. Insert a new switch and re-assemble in reverse order.

   When connecting the wiring to the new switch the polarity of the wires is not important.

7.25 PRESSURE RELIEF VALVE - Fig. 34

1. Gain access behind the front casing and drain the boiler heating circuit as described in Sections 7.1 and 7.2.
2. Disconnect the pressure relief valve outlet fitting.
3. Remove the two screws securing the expansion relief valve and the left hand DHW manifold securing screw.
4. Withdraw the retaining clip from the valve and pull the valve from the pump housing.
5. Re-assemble in reverse order.
6. Refill and pressurise the system. (Refer to Commissioning, Section 5.1).

7.26 DHW HEAT EXCHANGER

1. Gain access behind the front casing and drain the boiler heating and hot water circuits as described in Sections 7.1 and 7.2.
2. Release the nut securing the condensate pipe and remove the flexible condensate pipe from the condensate trap. Rotate the pipe to clear.
3. To create more space to withdraw the heat exchanger - Remove the screw securing the fan air inlet pipe and remove the pipe, remove the screws securing the fan and move it to the right hand side of the chamber.
4. Remove the diverter valve motor as described in Section 7.13.
5. Using a 4 mm Allen key unscrew the two socket head capscrews securing the DHW heat exchanger. Withdraw the heat exchanger from the boiler by moving it to the left and rotating it to remove.
   Note: Be careful not to allow water to drip onto any electrical components.
6. Re-assemble in reverse order making sure that the printing on the heat exchanger is at the top when fitted and that the seals are in position in the manifold.
7. Refill and pressurise the system. (Refer to Commissioning, Section 5.1).

7.27 MAINS WATER INLET FILTER - Fig. 13

1. The mains water inlet filter is located in the body of the DHW flow switch. Refer to Section 7.17 to remove the flow switch.
2. The filter can be removed using a small screwdriver.
3. Clean the filter and re-assemble in reverse order.

7.28 DIVERTER VALVE CARTRIDGE - Fig. 32

1. Gain access behind the front casing and drain the boiler heating circuit as described in Sections 7.1 and 7.2.
2. Remove the diverter valve motor as described in Section 7.13.
3. Using a 28 mm spanner turn the diverter valve cartridge anticlockwise until its retaining lugs hit the stops.
4. Withdraw the cartridge taking care not to spill any water onto any electrical components.
5. Insert the new cartridge with the locating lug at the top and push firmly into place. Using a 28 mm spanner turn the cartridge clockwise until the retaining lugs are locked into position.
6. Re-assemble in reverse order.
7. Refill and pressurise the system. (Refer to Commissioning, Section 5.1).

7.29 EXPANSION VESSEL - Fig. 30

Note: Check that the pressure of the new vessel is 1 bar before it is installer.

1. Gain access behind the front casing and drain the boiler heating circuit as described in Sections 7.1 and 7.2.
2. Disconnect the pipe from the expansion vessel.
3. Remove the screw securing the top support bracket.
4. Remove the three screws securing the side panel and remove the panel.
5. Lift the expansion vessel out of the boiler.
6. When replacing the vessel, ensure that the connection is towards the left of the boiler and re-assemble in reverse order using new seals as necessary.
7. Refill and pressurise the system. (Refer to Commissioning, Section 5.1).

7.30 CYCLONE (if wall jig is fitted) - Fig. 13

1. Remove the bottom tray and close the isolating valves either side of the cyclone.
2. Disconnect the unions from the cyclone. Remove the two screws securing the support bracket and remove the cyclone. Re-assemble with a new cyclone.
3. Pressurise the system. (Refer to Commissioning, Section 5.1).

7.31 CONDENSATE TRAP - Fig. 13

1. Gain access behind the front casing as described in Section 7.1.
2. Disconnect the top and drain connection of the condensate trap.
3. Place a container under the boiler and unscrew the bowl at the bottom of the trap, see Fig. 13. Some water will spill from the trap.
4. Remove the screw securing the trap to the bottom of the boiler casing and lift out the trap.
5. Fit the new trap in reverse order.

   Note: Fill the new trap with water once installed.

7.32 SEASONALITY VALVE (C models only) - Fig. 13

1. Gain access behind the front casing and drain the hot water circuit as described in Sections 7.1 and 7.2.
2. Remove the valve by disconnecting the unions from the bottom of the boiler, the mains inlet valve and filling loop.
3. Re-assemble in reverse order using a new valve.

8 WIRING DIAGRAMS

8.1 ILLUSTRATED WIRING DIAGRAM

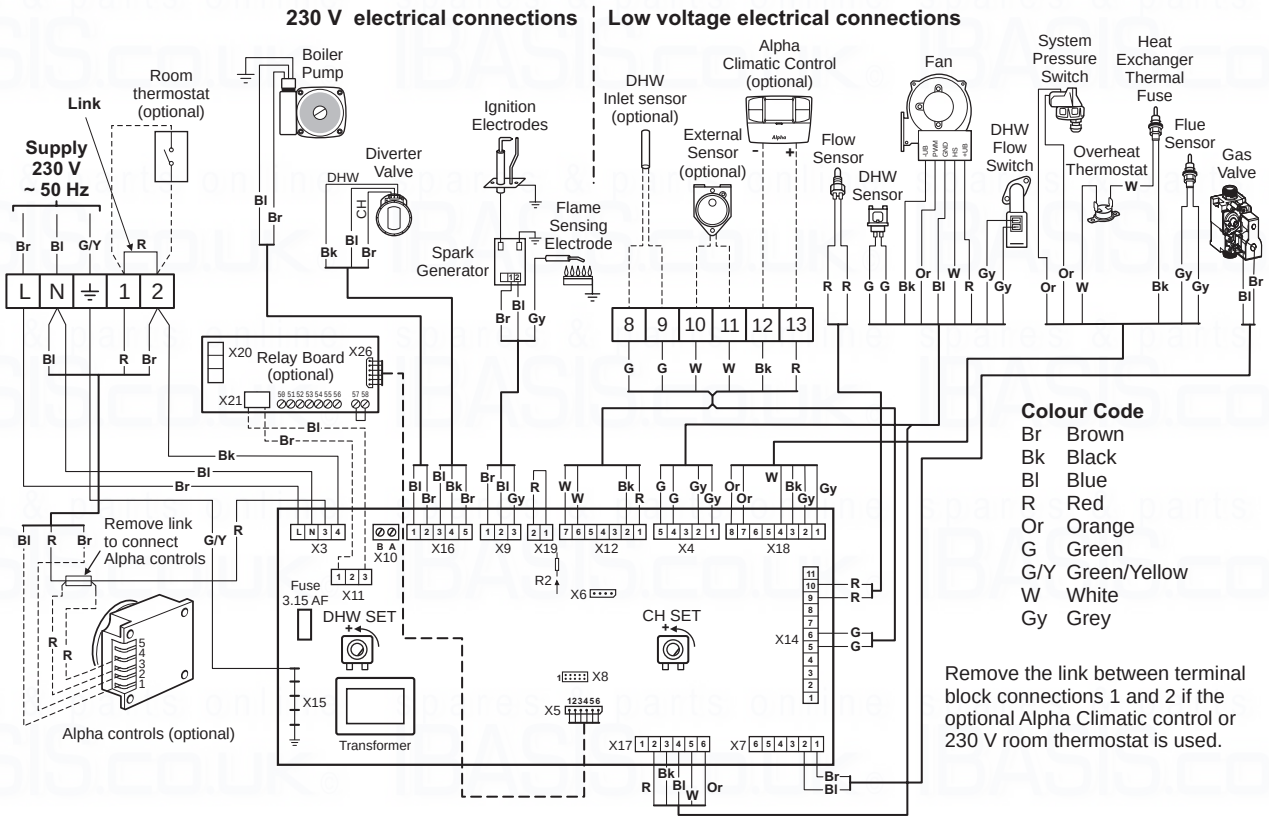

8.2 FUNCTIONAL FLOW WIRING DIAGRAM

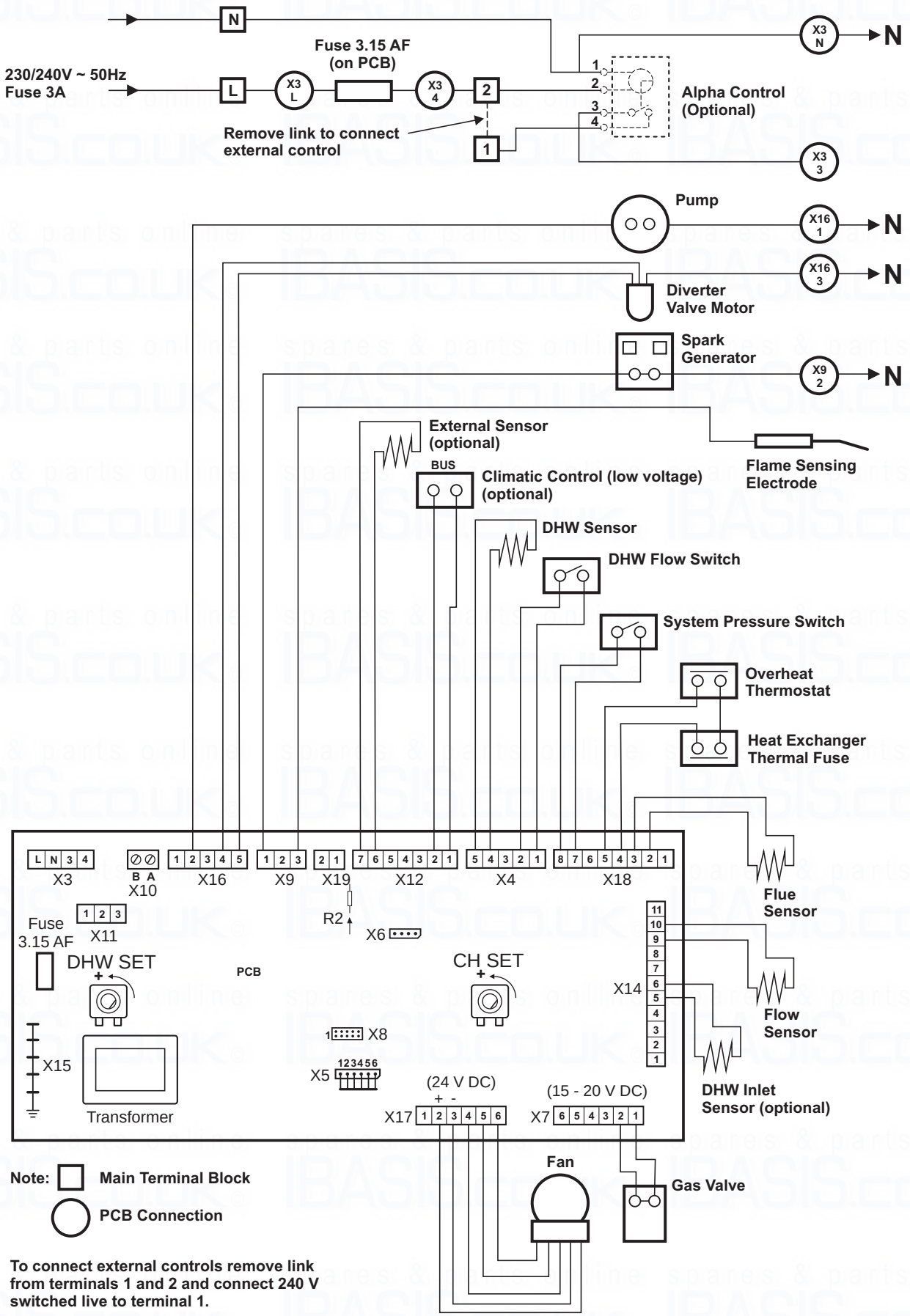

9 ERROR CODES AND FAULT FINDING

9.1 CARRY OUT INITIAL FAULT FINDING CHECKS

1. Check that gas, electrical and water supplies are available at the boiler.
   i.e. Inlet gas pressure = 20 mbar - Electrical supply = 230/240 V ~ 50 Hz
   CH water system pressurised to between 0.75 and 1.25 bar - DHW flow rate is more than 2.5 litre/min
2. Carry out electrical system checks, i.e. Earth Continuity, Resistance to Earth, Short Circuit and Polarity with a suitable meter.
   Note: These checks must be repeated after any servicing or fault finding.
3. Ensure all external controls are calling for heat and check all external and internal fuses.
4. Check that the gas and water pipework has been connected to the correct connections on the boiler and all valves are open.

However, before any servicing or replacement of parts ensure the gas and electrical supplies are isolated.

9.2 ERROR CODES AND FAULT FINDING

Error code	Fault	Fault description	Possible causes
01	Ignition failure	Flame not detected during ignition sequence	Gas supply Check pressure tubes Ignition electrode gap Flame sensor electrode gap Ignition generator or lead Flame sensor electrode lead Gas valve setting Gas valve PCB
02	Overheat boiler lock out	Overheat thermostat or thermal fuse has operated	Pump or flow problem Blocked heat exchanger Air in heat exchanger Overheat thermostat Thermal fuse (if open circuit then replace primary heat exchanger)
03	High flue thermostat temperature	Flue thermostat intervention (flue temperature over 113°C)	Blocked or restricted primary flow Heat exchanger air flow blocked Flue restriction Flue sensor fault
04	Gas valve electrical connection fault	Gas valve wiring circuit fault detected	Gas valve lead connection fault Faulty gas valve Faulty PCB
05	Heating flow sensor fault	Incorrect flow sensor resistance value	Flow sensor wire connections Flow sensor faulty
06	DHW sensor fault (InTec C, X, GS only)	DHW sensor resistance value is incorrect	DHW sensor wiring connection DHW sensor faulty
08	Maximum number of resets	Maximum number of resets reached (5)	Refer to fault history codes (INFO menu d9)
10	Primary system pressure low	Primary pressure switch has operated	Check expansion vessel pressure (1 bar) Leak in system Expansion relief valve operated Primary pressure switch
12	Cylinder sensor fault (InTec S and FlowSmart only)	Incorrect cylinder sensor resistance	Cylinder sensor wiring connections Cylinder sensor faulty
15	Internal wiring error	Incorrect wiring configuration detected	Check internal wiring connections to PCB Combination boiler DHW sensor X4 System boiler link X14 Refer to wiring diagram

Error code	Fault	Fault description	Possible causes
16	Fan fault	Fan wiring fault or fan faulty	Check fan wiring connections Fan fault PCB fault
20	Flame sensing fault	False flame detection Flame detected but gas valve is not open	Check flame sensing electrode and lead PCB fault
24	Control panel button fault	Control panel button stuck in the on position	Check for jammed control panel buttons Check for jammed PCB buttons
25	Overheat lock out	Rapid temperature rise of flue sensor	Air in heat exchanger Blocked or restricted primary flow Heat exchanger air flow blocked Flue restriction Flue sensor fault Pump fault Boiler or heating circuit valve closed
27	Insufficient primary flow	Rapid temperature rise of primary sensor	Blocked or restricted primary flow Air in heat exchanger Boiler or heating circuit valve closed Pump fault Primary flow sensor fault
29	Flue sensor fault	Flue sensor resistance out of range	Check sensor wiring connection Flue sensor faulty
31	Loss of communication with external control (Alpha Climatic)	Loss of connection between the boiler and Alpha Climatic control unit	Remote control or receiver connection wiring Remote control or receiver
37	Low supply voltage	Insufficient supply voltage to operate boiler	Check mains power supply
38	Loss of flame rectification	Flame detected but signal is lost. Ignition reattempts after fan purge	Check flame sensing electrode and lead Check for flue gas recirculation Check/adjust the gas valve settings Check/adjust the fan speed settings
43	Loss of flame rectification	Repeated loss of flame signal during operation (shown as E38 in the fault code history in the INFO menu)	Check gas supply/working pressure Check flame sensing electrode and lead Check for flue gas recirculation Check/adjust the gas valve settings Check/adjust the fan speed settings
44	Safety lock out	The boiler has attempted to fire repeatedly for the maximum time limit	Check external control (room thermostat) requests Rapid on/off hot tap requests
46	External sensor intervention	No continuity of external sensor circuit	Check external sensor and cable are not damaged or wet Check continuity of external sensor and circuit Check connection at X19 on PCB and sensor connecting block
47	Reduced burner output	Flue thermostat has sensed high flue gas temperature (110°C) and reduced the burner output to prevent damage. If the temperature continues to rise the boiler will lock out and E03 will be displayed	Air in heat exchanger Restricted primary flow Heat exchanger air flow blocked Flue restriction Flue sensor fault Pump fault

10 SHORT PARTS LIST

Reference	Description	Qty.	Alpha Pt. No.	British Gas GC No.
	Spark generator	1	1.025360	
	Diverter valve cartridge assembly	1	3.020380	
	Seasonality valve	1	3.017106	
	12 L flow regulator (red - 24X)	1	1.020412	
	Pressure gauge	1	1.023551	
	Condensate trap assembly	1	3.020367	
	Flue sensor	1	1.024296	
	DHW sensor	1	1.025380	
	Overheat thermostat	1	1.025797	
	Flame sensing electrode	1	1.032007	
	Inlet mesh filter	1	1.8403	
	Flue turret (30C - 34C - 28X)	1	1.030738	
	Flue turret (26C - 24X)	1	1.030636	
	DHW flow switch	1	1.028570	
	Ignition electrode	1	3.017477	
	Pump assembly	1	3.021702	
	Filling loop	1	3.020960	
	Flue turret foam seal	1	1.030666	
	14L flow regulator (pink - 28X)	1	1.032198	
	Primary heat exchanger (26C - 24X)	1	1.031447	
	Primary heat exchanger (30C - 28X)	1	1.031448	
	Primary heat exchanger (34C)	1	1.031449	
	Burner (34C)	1	1.031824	
	Burner (26C - 24X)	1	1.023999	
	Burner (30C - 28X)	1	1.026281	
	Diverter valve motor	1	1.028572	
	Pressure switch	1	1.027277	
	DHW heat exchanger 12 plate (26C - 24X)	1	1.028657	
	DHW heat exchanger 14 plate (30C - 28X)	1	1.028658	
	DHW heat exchanger 18 plate (34C)	1	1.028660	
	PCB	1	1.030267	
	Condensate trap bowl	1	1.029697	
	Primary NTC sensor	1	1.021762	
	Injector 5.1 mm (26C, 24X - NG)	1	1.022472	
	Injector 6.8 mm (30C, 28X - NG)	1	1.031471	
	Injector 3.8 mm (26C, 24X - LPG)	1	1.022050	
	Injector 4.8 mm (30C, 28X - LPG)	1	1.022052	
	Injector 5.8 mm (34C - LPG)	1	1.022049	
	Pressure relief valve 3 bar	1	1.028643	
	Gas valve	1	1.031823	
	Automatic air vent with 'O' ring	1	1.027110	
	Drip tray/flue connection	1	1.030667	
	Expansion vessel 8L	1	1.030996	
	Fan (34C)	1	1.029719	
	Fan (26C - 30C - 24X - 28X)	1	1.027178	
	Flue turret (30C - 34C - 28X)	1	3.022546	
	Flue turret (26C - 24X)	1	3.022544	
	Complete boiler seal kit	1	3.022652	
	Hydraulic circuit seal kit	1	3.022653	
	Primary H/E seal kit	1	3.022654	
	Air/flue system seal kit	1	3.022655	

GAS BOILER SYSTEM COMMISSIONING CHECKLIST

This Commissioning Checklist is to be completed in full by the competent person who commissioned the boiler as a means of demonstrating compliance with the appropriate Building Regulations and then handed to the customer to keep for future reference.

Failure to install and commission this equipment to the manufacturer's instructions may invalidate the warranty but does not affect statutory rights.

Customer Name _____ Telephone Number _____

Address _____

Boiler Make and Model _____

Boiler Serial Number

Commissioned by *(print name)* _____ Gas Safe Register licence No. _____

Company Name _____ Telephone Number _____

Company Address _____

_____ Commissioning Date _____

To be completed by the customer on receipt of a Building Regulations Compliance Certificate*:

Building Regulations Notification Number *(if applicable)*

CONTROLS **Tick the appropriate boxes**

Time and Temperature Control to Heating	Room Thermostat and Programmer/Timer ☐	Programmable Room Thermostat ☐	Load/Weather Compensation ☐	Optimum Start Control ☐
Time and Temperature Control to Hot Water			Cylinder Thermostat and Programmer/Timer ☐	Combination Boiler ☐
Heating Zone Valves			Fitted ☐	Not Required ☐
Hot Water Zone Valves			Fitted ☐	Not Required ☐
Thermostatic Radiator Valves			Fitted ☐	Not Required ☐
Automatic Bypass to System			Fitted ☐	Not Required ☐
Boiler Interlock				Provided ☐

ALL SYSTEMS

The system has been flushed and cleaned in accordance with BS7593 and boiler manufacturer's instructions Yes ☐

What system cleaner was used?

What inhibitor was used? Quantity _____ *litres*

CENTRAL HEATING MODE **Measure and Record:**

Gas Rate	_____ m^3/hr	OR		_____ ft^3/hr
Burner Operating Pressure (if applicable)	_____ mbar	OR	Gas Inlet Pressure	_____ mbar
Central Heating Flow Temperature				_____ °C
Central Heating Return Temperature				_____ °C

COMBINATION BOILERS ONLY

Is the installation in a hard water area (above 200ppm)? Yes ☐ No ☐

If yes, has a water scale reducer been fitted? Yes ☐ No ☐

What type of scale reducer has been fitted?

DOMESTIC HOT WATER MODE Measure and Record:

Gas Rate	_____ m^3/hr	OR		_____ ft^3/hr
Burner Operating Pressure (at maximum rate)	_____ mbar	OR	Gas Inlet Pressure (at maximum rate)	_____ mbar
Cold Water Inlet Temperature				_____ °C
Hot water has been checked at all outlets			Yes ☐	Temperature _____ °C
Water Flow Rate				_____ *l/min*

CONDENSING BOILERS ONLY

The condensate drain has been installed in accordance with the manufacturer's instructions and/or BS5546/BS6798 Yes ☐

INSTALLATIONS

If required by the manufacturer, record the following CO_2 _____ % OR CO _____ *ppm* OR CO/CO_2 Ratio _____

The heating and hot water system complies with the appropriate Building Regulations Yes ☐

The boiler and associated products have been installed and commissioned in accordance with the manufacturer's instructions Yes ☐

The operation of the boiler and system controls have been demonstrated to and understood by the customer Yes ☐

The manufacturer's literature, including Benchmark Checklist and Service Record, has been explained and left with the customer Yes ☐

Commissioning Engineer's Signature

Customer's Signature

(To confirm satisfactory demonstration and receipt of manufacturer's literature)

*All installations in England and Wales must be notified to Local Authority Building Control (LABC) either directly or through a Competent Persons Scheme. A Building Regulations Compliance Certificate will then be issued to the customer.

benchmark COLLECTIVE MARK
THE MARK OF QUALITY FOR THE INSTALLATION, COMMISSIONING AND SERVICING OF DOMESTIC HEATING AND HOT WATER SYSTEMS

©Heating and Hotwater Industry Council (HHIC)

SERVICE RECORD

It is recommended that your heating system is serviced regularly and that the appropriate Service Record is completed.

Service Provider

Before completing the appropriate Service Record below, please ensure you have carried out the service as described in the manufacturer's instructions.

Always use the manufacturer's specified spare part when replacing controls.

SERVICE 1 Date

Energy Efficiency Checklist completed? Yes ☐ No ☐

Engineer Name

Company Name

Telephone Number

Gas Safe Register licence No.

Comments

Signature

SERVICE 2 Date

Energy Efficiency Checklist completed? Yes ☐ No ☐

Engineer Name

Company Name

Telephone Number

Gas Safe Register licence No.

Comments

Signature

SERVICE 3 Date

Energy Efficiency Checklist completed? Yes ☐ No ☐

Engineer Name

Company Name

Telephone Number

Gas Safe Register licence No.

Comments

Signature

SERVICE 4 Date

Energy Efficiency Checklist completed? Yes ☐ No ☐

Engineer Name

Company Name

Telephone Number

Gas Safe Register licence No.

Comments

Signature

SERVICE 5 Date

Energy Efficiency Checklist completed? Yes ☐ No ☐

Engineer Name

Company Name

Telephone Number

Gas Safe Register licence No.

Comments

Signature

SERVICE 6 Date

Energy Efficiency Checklist completed? Yes ☐ No ☐

Engineer Name

Company Name

Telephone Number

Gas Safe Register licence No.

Comments

Signature

SERVICE 7 Date

Energy Efficiency Checklist completed? Yes ☐ No ☐

Engineer Name

Company Name

Telephone Number

Gas Safe Register licence No.

Comments

Signature

SERVICE 8 Date

Energy Efficiency Checklist completed? Yes ☐ No ☐

Engineer Name

Company Name

Telephone Number

Gas Safe Register licence No.

Comments

Signature

SERVICE 9 Date

Energy Efficiency Checklist completed? Yes ☐ No ☐

Engineer Name

Company Name

Telephone Number

Gas Safe Register licence No.

Comments

Signature

SERVICE 10 Date

Energy Efficiency Checklist completed? Yes ☐ No ☐

Engineer Name

Company Name

Telephone Number

Gas Safe Register licence No.

Comments

Signature

Alpha
HEATING INNOVATION

Alpha Therm Limited.
Nepicar House, London Road, Wrotham Heath,
Sevenoaks, Kent TN15 7RS
Tel: 0844 871 8764

email: info@alpha-innovation.co.uk
website: www.alpha-innovation.co.uk

These instructions have been carefully prepared but we reserve the right to alter the specification at any time in the interest of product improvement.
© Alpha Therm Limited 2011.

Part No. 1.030787 Rev 15.035283/000

Manual compiled and designed by Publications 2000 - Tel: 01670 356211

05/11/D272