# *Installation and Servicing Instructions*

# Alpha CD90S and 115S

## Wall Mounted, Fan Assisted, Gas Fired, High Efficiency Condensing System Boilers


For Technical help or for Service call ...
**ALPHA HELPLINE Tel: 0844 8718764**
website:www.alpha-innovation.co.uk

Alpha
HEATING INNOVATION

Nepicar House, London Road,
Wrotham Heath, Sevenoaks,
Kent TN15 7RS


CE 0051

benchmark
COLLECTIVE MARK
THE MARK OF QUALITY FOR THE INSTALLATION, COMMISSIONING AND SERVICING OF DOMESTIC HEATING AND HOT WATER SYSTEMS

**For use with Natural Gas or Propane Gas (LPG)**

**Leave these instructions with the User**

# CONTENTS


1 Introduction ..... 2
2 Technical data ..... 3
3 General boiler information ..... 7
4 Installation ..... 14
5 Commissioning ..... 18
6 Routine servicing ..... 23
7 Wiring diagram ..... 27
8 Fault finding ..... 28
9 Short parts list ..... 30
10 Benchmark Checklist ..... 31
11 Service record ..... 32


# 1 INTRODUCTION

The Alpha CD90S and 115S are wall mounted high efficiency condensing, fan assisted system boilers. The burner is lit electronically and the heat output is controlled by a modulating fan and gas valve.

These are system boilers providing heating only for sealed central heating systems. However, they may be used with an open central heating system if required - refer to Section 3.8.

The boilers are supplied with type B23 flue configuration (open chamber and forced draught) but can be changed to type C (room sealed) by using a conversion kit.

The boilers are fitted with a pump, 4 bar pressure relief valve and pressure gauge fully assembled and tested. They are designed for use with a fully pumped, sealed and pressurised central heating system. If used with an open system refer to Section 3.8.

The CD90S boiler is suitable for central heating loads of between 22.5 and 90 kW (85 985 and 307 092 Btu/h).
The CD115S boiler is suitable for central heating loads of between 28.8 and 109 kw (98 269 and 371 923 Btu/h).
The boilers can be supplied for use with Natural gas or Propane Gas (LPG).

**Note:** There are a number of additional controls and accessories available for use with the boilers to enable cascade and zone installations to be used. Further information is available from Alpha Therm Ltd.

**IMPORTANT**

It is the law that all gas appliances are installed by a competent person, ie Gas Safe registered personnel, in accordance with the following recommendations:-

Current Gas Safety (Installation and Use) Regulations

All current Building Regulations issued by the Department of the Environment, i.e. Approved Document L1.

Building Standards (Scotland) (Consolidation) Regulations issued by the Scottish Development Department

UK Water Regulations/Byelaws (Scotland)

Health & Safety Document No. 635 (The Electricity At Work Regulations 1989)

The installation should also be in accordance with the following British Standard Codes of Practice:-

| | |
|---|---|
| BS 5295 | Code of practice foe ventilation principles and designing for natural ventilation |
| BS 5854 | Code of practice for flues and flue structures in buildings |
| BS 5978 | Safety and performance of gas fired hot water boilers of rated inputs between 70 kW and 1.8 MW |
| BS 6644 | Specification for installation of gas fired hot water boilers of rated inputs between 70 kW and 1.8 MW |
| BS 6700 | Specification for design, installation, testing and maintenance of services supplying hot water for domestic use within buildings and their curtilages. |
| BS 6981 | Installation of low pressure gas pipework of up to 28 mm in domestic premises |
| BS 7074 | Application selection and installation of expansion vessels and ancillary equipment for sealed water systems<br>Part 1 Code of practice for domestic heating and hot water<br>Part 2 Code of practice for low and medium temperature hot water system |
| BS 7593 | Code of Practice for treatment of water in heating systems |
| BS 7671 | Requirements for electrical installations, IEE Wiring Regulations |
| BS EN 12828 | Design for water based heating systems |
| DOE | Chimney heights, Third edition of the Clean Air Act Memorandum |
| IGE/UP/1 | Soundness testing and purging of industrial and commercial gas installations |
| IGE/UP/1A | Soundness testing and purging of small low pressure industrial and commercial natural gas installations |
| IGE/UP/4 | Commissioning of gas fired plant on industrial and commercial premises |
| IGE/UP/10 | Installation of gas appliances in industrial and commercial premises<br>Part 1 Flued appliances |
| IM/11 | Flues for commercial and industrial gas fired boilers |

Reference should be made to DEFRA document 'Guide to condensing boiler installation assessment procedures for dwellings'.

If installation is in a timber framed building, refer to the Institute of Gas Engineers document IGE/UP/7.

This appliance meets the requirements of IPX5D, ie degree of protection against moisture.

This appliance contains no asbestos and no substances have been used in the construction process that contravene the COSHH Regulations (Control of Substances Hazardous to Health).

Failure to install this appliance correctly could lead to prosecution. It is in your own interest and that of safety to ensure that the law is complied with.

Manufacturer's instructions must **NOT** be taken in anyway as over-riding statutory obligations.

**Notes:**
1. Ensure that the Benchmark Checklist has been completed after the boiler has been installed and commissioned.
2. It is the law that all boiler installations are registered by the installer through the Gas Safe Gas Work Notification Scheme.
3. The boiler must only be used with the flue components supplied with the boiler.

**Propane Gas (LPG) -** In addition to the regulations and requirements stated, the boiler **must be** installed in accordance with BS 5482:1 - The Installation of Propane Burning Appliances in Permanent Dwellings.

# 2 TECHNICAL DATA

## *2.1 PERFORMANCE*

### NATURAL GAS (CAT: I2H 2H - G20 - 20 mbar)

**Alpha CD90S**

| Central Heating | | MAX. | MIN. |
|---|---|---|---|
| Heat Input ($H_s$) | kW | 92.8 | 23.4 |
| (Gross) | Btu/h | 316 634 | 79 841 |
| Heat Input ($H_i$) | kW | 90.0 | 22.5 |
| (Net) | Btu/h | 307 080 | 76 770 |
| Heat Output ($H_s$ condensing) | kW | 97.8 | 24.9 |
| (50°C/30°C) | Btu/h | 333 700 | 85 000 |
| Heat Output ($H_i$ non-condensing) | kW | 88.4 | 22.0 |
| (80°C/60°C) | Btu/h | 301 621 | 75 064 |
| Fan Speed | rpm | 5 900 | 1 750 |
| Gas Rate | m³/h | 8.9 | 2.3 |
| | ft³/h | 297 | 75 |

**Alpha CD115S**

| Central Heating | | MAX. | MIN. |
|---|---|---|---|
| Heat Input ($H_s$) | kW | 110.7 | 29.4 |
| (Gross) | Btu/h | 37 771 | 100 313 |
| Heat Input ($H_i$) | kW | 109.0 | 28.8 |
| (Net) | Btu/h | 371 908 | 98 256 |
| Heat Output ($H_s$ condensing) | kW | 120.5 | 32.6 |
| (50°C/30°C) | Btu/h | 411 200 | 111 200 |
| Heat Output ($H_i$ non-condensing) | kW | 109.2 | 29.0 |
| (80°C/60°C) | Btu/h | 372 590 | 98 948 |
| Fan Speed | rpm | 5 800 | 1 750 |
| Gas Rate | m³/h | 10.6 | 2.8 |
| | ft³/h | 355 | 94 |

### PROPANE GAS (CAT I3P 3P - G31 - 37 mbar)

**Alpha CD90S**

| Central Heating | | MAX. | MIN. |
|---|---|---|---|
| Heat Input ($H_s$) | kW | 92.8 | 23.4 |
| (Gross) | Btu/h | 31 634 | 79 841 |
| Heat Input ($H_i$) | kW | 90.0 | 22.5 |
| (Net) | Btu/h | 307 080 | 76 770 |
| Heat Output ($H_s$ condensing) | kW | 95.4 | 24.3 |
| (50°C/30°C) | Btu/h | 333 700 | 85 000 |
| Heat Output ($H_i$ non-condensing) | kW | 88.4 | 22.0 |
| (80°C/60°C) | Btu/h | 301 621 | 75 064 |
| Fan Speed | rpm | 5 900 | 1 750 |
| Gas Rate | m³/h | 3.5 | 0.9 |
| | ft³/h | 117 | 30 |

**Alpha CD115S**

| Central Heating | | MAX. | MIN. |
|---|---|---|---|
| Heat Input ($H_s$) | kW | 110.7 | 29.4 |
| (Gross) | Btu/h | 37 771 | 100 313 |
| Heat Input ($H_i$) | kW | 109.0 | 28.8 |
| (Net) | Btu/h | 371 908 | 98 256 |
| Heat Output ($H_s$ condensing) | kW | 120.5 | 32.6 |
| (50°C/30°C) | Btu/h | 411 200 | 111 200 |
| Heat Output ($H_i$ non-condensing) | kW | 109.2 | 29.0 |
| (80°C/60°C) | Btu/h | 372 590 | 98 948 |
| Fan Speed | rpm | 5 700 | 1 750 |
| Gas Rate | m³/h | 4.2 | 1.1 |
| | ft³/h | 14.0 | 36.7 |

**Note:** The above appliances are fully modulating and are **not** range rated.

## 2.2 SYSTEM

| Central Heating (Sealed System) | |
|---|---|
| Max. Working System Pressure | 3.5 bar |
| Min. System Pressure | 0.5 bar |
| Max. System temperature | 85°C |
| Pressure Relief Valve Setting | 4 bar (58.8 PSI) |
| Flow Connection | 1½" BSP |
| Return Connection | 1½" BSP |
| Relief Valve Connection | ¾" BSP |
| Recommended System Pressure (cold) | 1.0 bar |
| CH Water Temp. (Approx. max.) | 85°C (185°F) |

## 2.3 COMPONENTS

| | | |
|---|---|---|
| Burner | | Stainless steel |
| Main Heat Exchanger | | Stainless steel |
| Main Burner Injector | CD90S NG | 12.0 mm |
| | CD115S NG | 14.0 mm |
| | CD90S LPG | 8.8 mm |
| | CD115S LPG | 10.8 mm |
| Concentric Flue Outer Duct | | 125 mm dia. |
| Concentric Flue Inner Duct | | 80 mm dia. |
| Open Flue Single Flue Pipe | | 80 mm dia. |

## 2.4 ELECTRICAL

| | | |
|---|---|---|
| Supply | | 230/240 V ~ 50 Hz |
| External Fuse | | 3 A |
| Power Consumption | CD90S | 370 W |
| | CD115S | 390 W |
| Internal Fuse - Main Terminal | | F2A |
| PCB Fuse F1 | | T2A |
| PCB Fuse F3 | | T4A |
| Electrode Spark Gap | | 3 to 4 mm |
| Electrical Enclosure Degree of Moisture Protection | | IPX5D |

## 2.5 INSTALLATION

| | | |
|---|---|---|
| Min. Clearances for Servicing (from casing) | Top | 350 mm |
| | Bottom | 350 mm |
| | Sides | 10 mm |
| | Front | 450 mm |
| Flue Diameter | Open Flue | 80 mm |
| | Concentric Flue | 125 mm |
| Flue Protruding Outside | Open Flue | 80 mm |
| | Concentric Flue | 125 mm |
| Hole For Flue Assy. | Open Flue | 100 mm dia. |
| | Concentric Flue | 127 mm dia. |
| Lift Weight | CD90S | 63 kg |
| | CD115S | 68 kg |

## 2.6 FLUE LENGTHS - See also Section 3.4

| Open Flue 80 mm single pipe - B23 | CD90S | CD115S |
|---|---|---|
| Maximum Horizontal | 17 m | 14 m |
| Maximum Vertical | 17 m | 14 m |
| 90° bend is equivalent to | 2.1 m | 2.1 m |
| 45° bend is equivalent to | 1.3 m | 1.3 m |

| Concentric 80/125 mm room sealed | CD90S | CD115S |
|---|---|---|
| Maximum Horizontal | 10 m | 7 m |
| Maximum Vertical | 12 m | 8 m |
| 90° bend is equivalent to | 1.9 m | 1.9 m |
| 45° bend is equivalent to | 1.4 m | 1.4 m |

## 2.7 GENERAL

| | | |
|---|---|---|
| Case Dimensions | Height | 1010 mm |
| | Width | 600 mm |
| | Depth | 610 mm |
| Gas Connection | CD90S | 3/4 " |
| | CD115S | 1 " |
| Water Content | CD90S | 9.5 L |
| | CD115S | 11.0 L |

## 2.8 PERFORMANCE DATA

| Boiler model | %$CO_2$ content (± 0.2%) | | | |
|---|---|---|---|---|
| | Natural Gas | | (LPG) Propane Gas | |
| | Min | CH Max | Min | CH Max |
| CD90S | 9.10 | 9.30 | 10.2 | 10.7 |
| CD115S | 8.95 | 9.45 | 10.3 | 10.7 |

## 2.9 AVAILABLE PUMP HEAD FOR CENTRAL HEATING

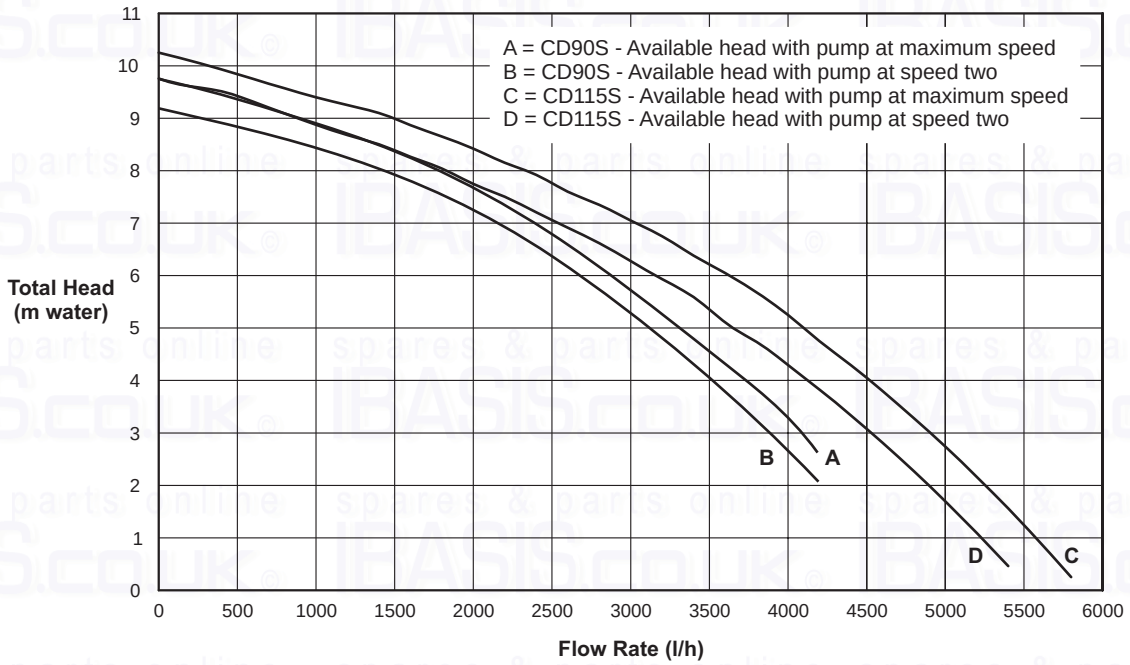


**Fig. 1**

## 2.10 ELECTRICAL CONNECTIONS

**Note: This Appliance Must Be Earthed**

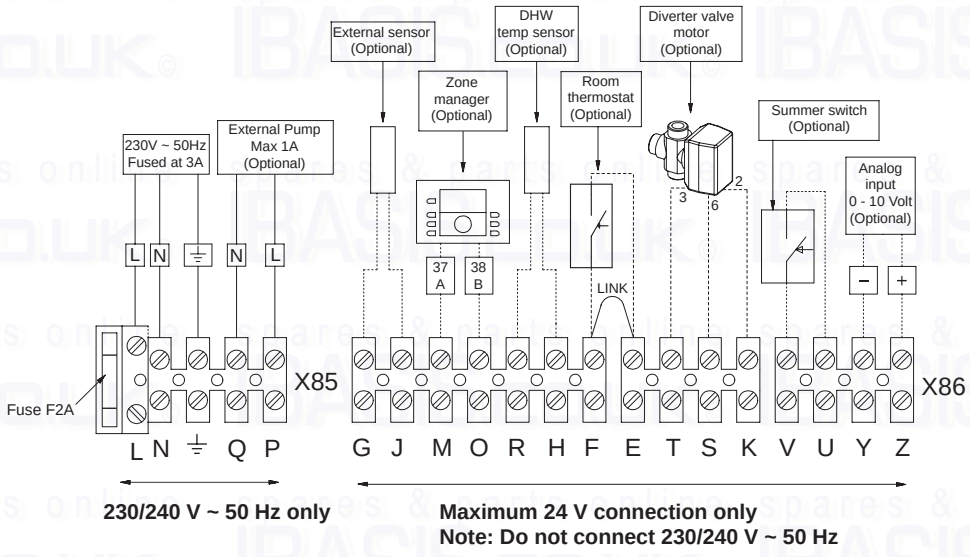


**Fig. 2**

## 2.11 BOILER SCHEMATIC

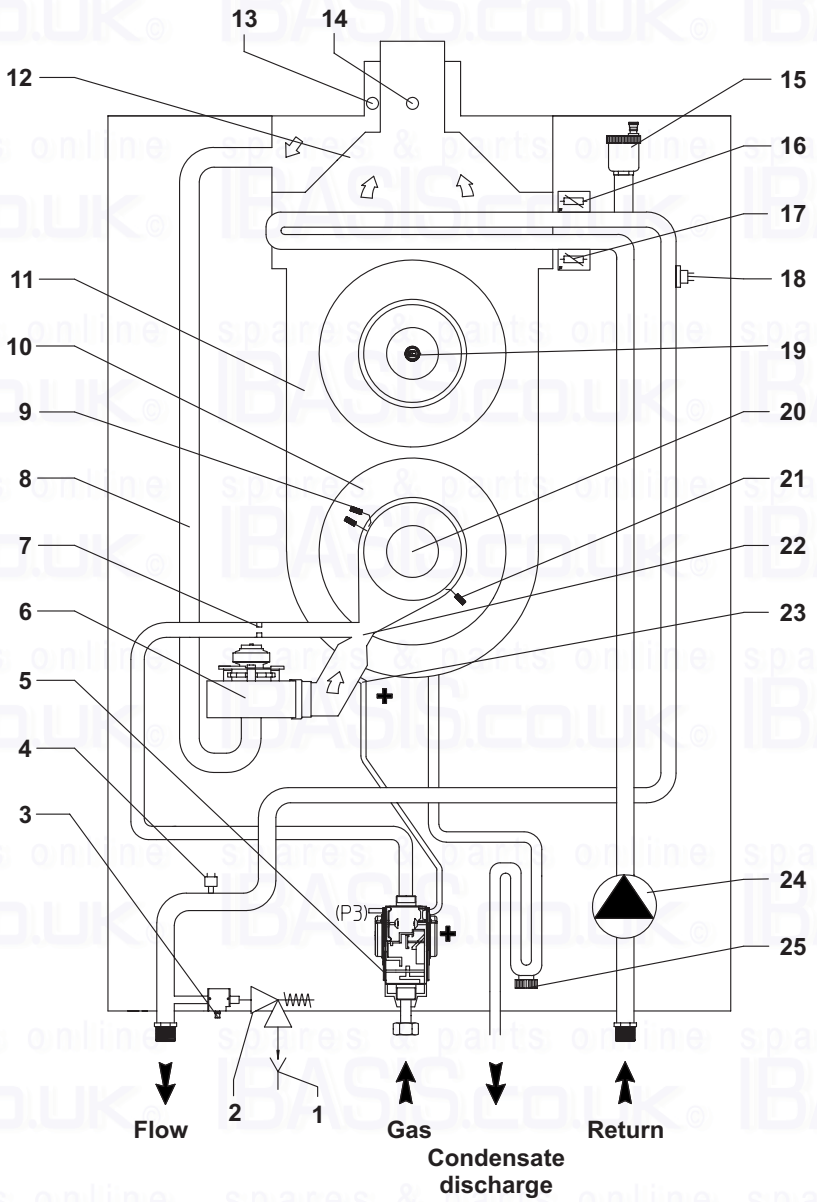


| | | | |
|---|---|---|---|
| 1 | Tundish | 15 | Automatic air vent |
| 2 | Pressure relief valve (4 bar) | 16 | Primary flow temperature sensor |
| 3 | Drain point | 17 | Primary return temperature sensor |
| 4 | Primary pressure switch | 18 | Overheat thermostat |
| 5 | Gas valve | 19 | Flue overheat thermostat |
| 6 | Fan | 20 | Burner |
| 7 | Injector | 21 | Flame sensing electrode |
| 8 | Air inlet pipe | 22 | Venturi |
| 9 | Ignition electrodes | 23 | Venturi positive point (P2) |
| 10 | Combustion chamber cover | 24 | Pump |
| 11 | Heat exchanger | 25 | Condensate trap |
| 12 | Flue hood | | |
| 13 | Air inlet sampling point | | |
| 14 | Flue sampling point | | |

**Fig. 3**

# 3 GENERAL BOILER INFORMATION

## 3.1 GAS SUPPLY

**Natural Gas:**

The Alpha CD90S boiler requires a gas rate of 8.9 $m^3/h$ (297 $ft^3/h$).
The Alpha CD115S boiler requires a gas rate of 10.6 $m^3/h$ (355 $ft^3/h$).

**Propane Gas (LPG):**

The Alpha CD90S boiler requires a gas rate of 7.17 kg/h or 14 litres/h of liquid gas.
The Alpha CD115S boiler requires a gas rate of 8.76 kg/h or 17.2 litres/h of liquid gas.

The local Propane Gas supplier should be consulted, at the installation planning stage, in order to establish the availability of an adequate supply of gas.

The meter and supply pipes must be capable of delivering this quantity of gas in addition to the demand from any other appliances. The boiler requires at least a 35 mm gas supply pipe and ensure the inlet supply pressure is at least 20 mbar for Natural Gas or 37 mbar for Propane Gas (LPG).

The complete installation, including the meter, must be tested for gas tightness and purged as described in BS 6891.

## 3.2 ELECTRICAL SUPPLY

The boiler requires a 230/240 V ~ 50 Hz mains supply, fused at 3 A

**Note: The boiler must be earthed.**

There must only be one common isolator, providing complete electrical isolation, for the boiler and any external controls.

This boiler has been fitted with a supply cable, however, if it is necessary to fit a cable use PVC insulated cable not less than 0.75 $mm^2$ (24 x 0.2 mm) to BS 6500 Table 16. The boiler should be connected to a fused three pin plug and unswitched shuttered socket outlet (both complying with BS 1363), or a fused double pole switch with a contact separation of at least 3 mm in both poles.

Wiring external to the boiler must be in accordance with the current IEE Wiring Regulations (BS 7671).

## 3.3 AIR SUPPLY

### *Open flued (Type B23 flue)*

Alpha CD90S and CD115S boilers leave the factory with 'B23' type configuration (open chamber and forced draught - single flue pipe) and receive the air for combustion from openings in the rear of the boiler, therefore air supply for combustion and ventilation must be provided in accordance with BS6644.

**Note:** Where a boiler installation is to operate in summer months (e.g. DHW) additional ventilation requirements are required if operating more than 50% of the time (refer to BS 6644).

### *Room sealed (Type C flue)*

If the boilers are converted to a 'C' type configuration (sealed chamber and forced draught - concentric flue pipe) as described in Section 3.4 only air for ventilation is required.

A minimum of 2 $cm^2$ free area per kW of net heat input at both high and low level is required for boiler rooms. For enclosures refer to BS 6644.

The minimum clearances for servicing must always be maintained.

### *3.4 FLUE SYSTEM*

The flue system must be installed in accordance with BS 5854, BS 6644, IM/11.

For horizontal flues ensure the flue assembly slopes downwards towards the boiler by a minimum of 25 - 30 mm per metre of flue.

It is recommended that horizontal and vertical flue assemblies should be supported approximately every 1.5 m with access provided to the joints.

Alpha CD90S and CD115S boilers leave the factory with 'B23' type flue configuration (open chamber and forced draught - single flue pipe). To change the configuration to 'C' type (sealed chamber and forced draught - concentric flue pipe), remove the 80 mm dia. adapter, the bracket and gasket from the top of the boiler and fit the concentric flue adaptor, see Section 4.5.

**Note:** **1.** Under no circumstances must the flue length (including allowances for extra bends) exceed the maximum flue lengths stated for each type of flue.

**2.** Failure to use the correct Alpha flue components with the boiler will invalidate the boilers CE approval, guarantee and may be unsafe.

**Seals for flue elements -** If lubrication of components (already performed by the manufacturer) is not sufficient, remove the residual lubricant using a dry cloth, then to ease fitting apply a small amount of common or industrial talc to the seal.

Ensure that the seals are correctly located in the elbows and extensions as shown in Fig. 4.

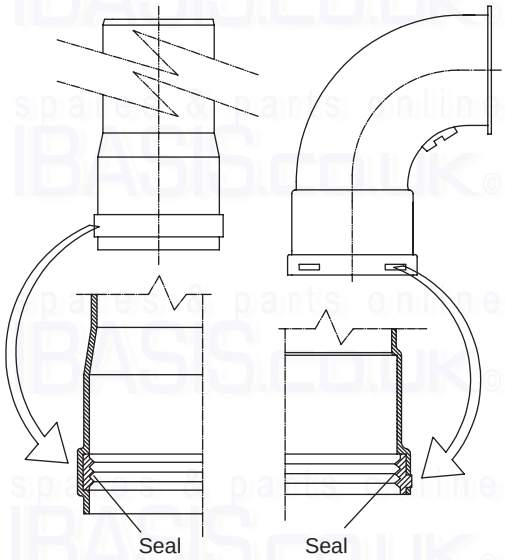


**Fig. 4**

Flue components are available as follows:-

**Open flue - 80 mm dia. single pipe**

Horizontal terminal kit 80 mm dia. (includes 1 m straight with terminal, one 90° bend and two collars)

Vertical terminal kit 80 mm dia.

Extension pipe 1 m x 80 mm dia.

90° bend 80 mm dia.

45° bend 80 mm dia.

**Concentric flue - 80/125 mm dia.**

Horizontal terminal kit 80/125 mm dia. (includes 1 m straight with terminal, one 90° bend, two collars and adaptor)

Vertical terminal kit 80/125 mm dia. (includes adaptor)

Extension kit 1 m x 80/125 mm dia.

90° bend 80/125 mm dia.

45° bend 80/125 mm dia.

### 3.4.1 Horizontal Flue Options

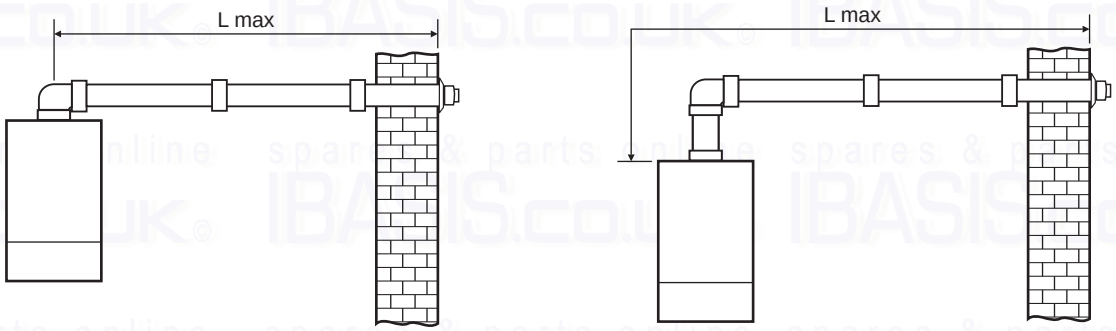


**Open flue:** 80 mm dia. single pipe Lmax = 17 m (CD90S), 14 m (CD115S)
90° bend is equivalent to 2.1 m of flue length
45° bend is equivalent to 1.3 m of flue length

**Concentric flue:** 80/125 mm dia. Lmax = 10 m (CD90S), 7 m (CD115S)
90° bend is equivalent to 1.9 m of flue length
45° bend is equivalent to 1.4 m of flue length

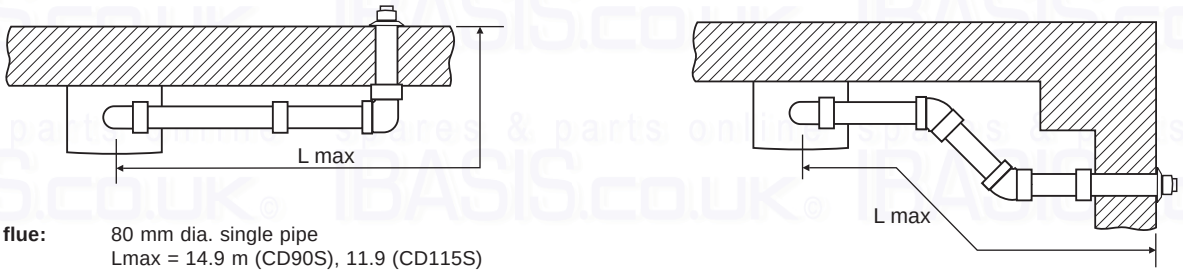


**Open flue:** 80 mm dia. single pipe
Lmax = 14.9 m (CD90S), 11.9 (CD115S)
**Concentric flue:** 80/125 mm dia.
Lmax = 8.1 m (CD90S), 5.1 m (CD115S)

**Open flue:** 80 mm dia. single pipe
Lmax = 14.4 m (CD90S), 11.4 m (CD115S)
**Concentric flue:** 80/125 mm dia.
Lmax = 7.2 m (CD90S), 4.2 m (CD115S)

**Fig. 5 - Horizontal flues**

### 3.4.2 Vertical Flue Options

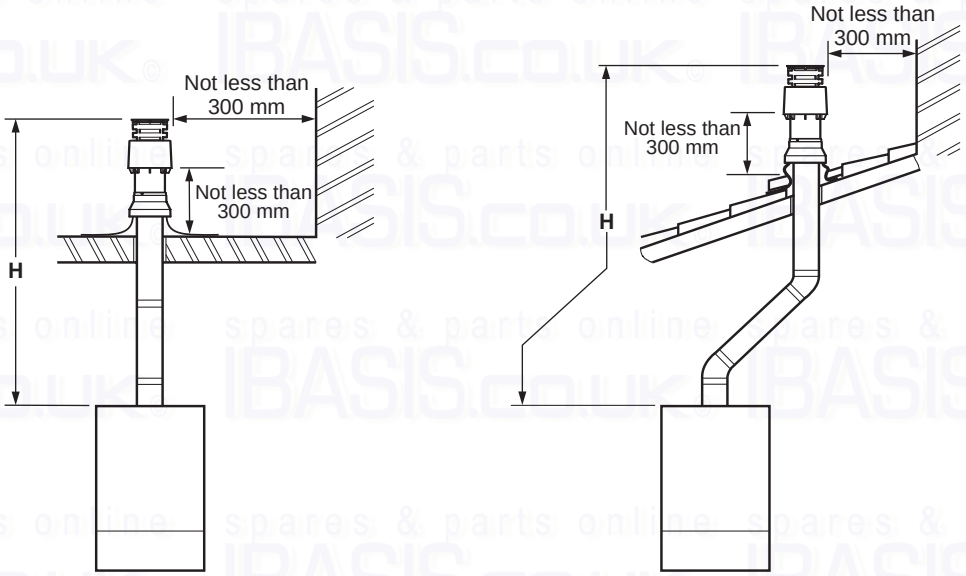


**Open flue:** 80 mm dia. single pipe
Hmax = 17 m (CD90S), 14 m (CD115S)
**Concentric flue:** 80/125 mm dia.
Hmax = 12 m (CD90S), 8 m (CD115S)

**Open flue:** 80 mm dia. single pipe
Hmax = 14.4 m (CD90S), 11.4 m (CD115S)
**Concentric flue:** 80/125 mm dia.
Hmax = 9.2 m (CD90S), 5.2 m (CD115S)

**Fig. 6 - Vertical flues**

### 3.5 FLUE TERMINAL LOCATION - Fig. 7

**Note:** In certain weather conditions the terminal will emit a plume of steam. If possible avoid positioning the terminal where this may cause a nuisance, i.e. positions A, D, G, H, J or M.

The flue terminal must be exposed to the external air and the position must allow the free passage of air across it at all times.

A terminal must not be sited below 2.1 m where people have access to, such as public footpaths, access routes, patios etc. However, If the terminal is fitted less than 2.1 m above a surface where there is no public access, the terminal must be protected by a terminal guard. A suitable guard is available from Alpha Therm Ltd.

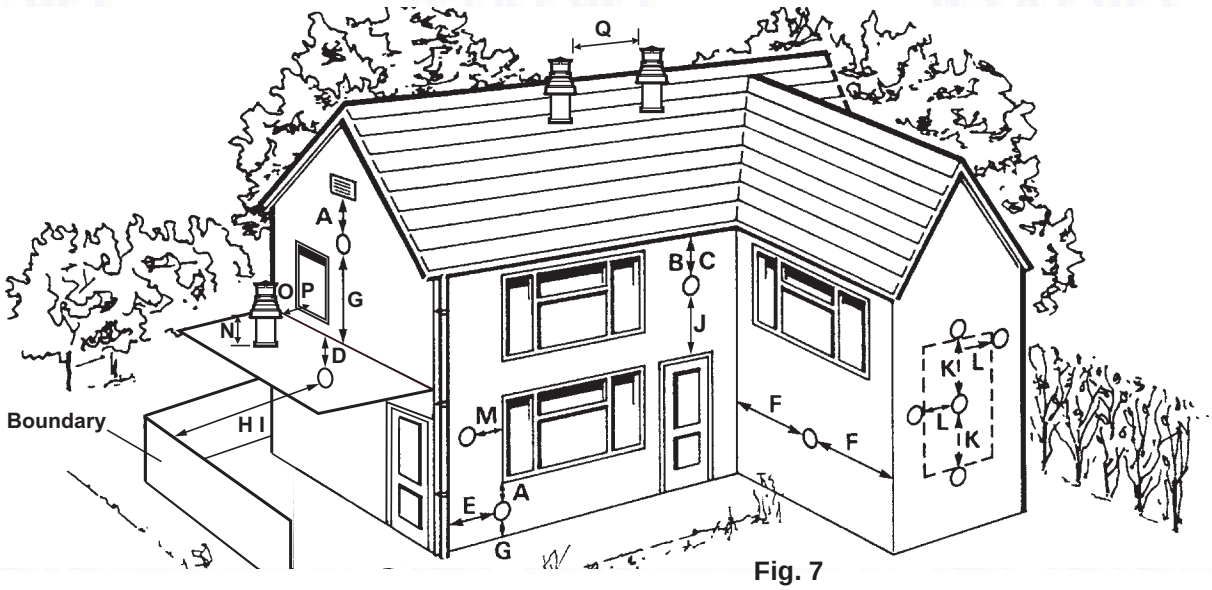


Fig. 7

| | Terminal position | Min. distance (mm) |
|---|---|---|
| A | Directly below an opening, air brick, windows, etc. | 300 (See Note 1) |
| B | Below gutters, soil pipes or drain pipes | 75 (See Note 3) |
| C | Below eaves | 200 (See Note 3) |
| D | Below balconies | 200 (See Note 3) |
| E | From a vertical drain pipe or soil pipe | 150 (See Note 3) |
| F | From an internal or external corner | 300 (See Note 2) |
| G | Above ground, roof or balcony level | 300 |
| H | From a surface or boundary facing the terminal | 600 (See Note 4) |
| I | From a terminal facing the terminal | 1200 mm |
| J | Above an opening, air brick, window etc. | 300 (See Note 1) |
| K | Vertically from a terminal on the same wall | 1500 mm |
| L | Horizontally from a terminal on the same wall | 300 mm |
| M | Horizontally from an opening, air brick, window etc. | 300 mm (See Note 1) |
| N | Minimum protrusion through a roof | 300 mm |
| O | From a vertical obstruction | 300 mm |
| P | From an openable window | 600 mm |
| Q | From an adjacent vertical terminal | 600 mm |

**Notes:**
1. In addition, the terminal should not be nearer than 150 mm to the framework of an opening into the buiding, i.e. a window surround or door surround.
2. This clearance may be reduced to 25 mm without effecting the performance of the boiler. However, to ensure the condensate plume does not affect adjacent surfaces a clearance of 300 mm is preferable.
3. These clearances may be reduced to 25 mm without effecting the performance of the boiler. However, to ensure the condensate plume does not affect adjacent surfaces the terminal can be extended beyond gutters, pipes, eaves, balconies etc. by upto 500 mm. If the flue is extended more than 500 mm outside, it should be boxed and insulated.
4. To reduce the possibility of nuisance to neighbouring buildings etc. it is recommended the terminal shouild not be less than 2500 mm from car parking spaces, building boundary walls, fences etc.

**Note:** A terminal must not be sited under a car port roof

### 3.6 BOILER LOCATION

The boiler is not suitable for external installation unless it is installed within a purpose designed weatherproof building.

The boiler must be installed on a flat vertical wall which is capable of supporting the weight of the boiler. The boiler can be fitted to or adjacent to a wall comprising of a combustible material without the need for a special thermal insulation barrier.

If the boiler is to be fitted in a timber framed building, it should be fitted in accordance with the Institute of Gas Engineers 'Guide for Gas Installations in Timber Frame Housing', reference IGE/UP/7.

The boiler may be installed in any room or internal space, although particular attention is drawn to the requirements of the current IEE Wiring (BS7671) Regulations, and in Scotland, the electrical provisions of the Building Regulations applicable in Scotland, with respect to the installation of the boiler in a room or internal space containing a bath or shower. Where a room-sealed boiler is installed in a room containing a bath or shower, it must not be possible for a person using the bath or shower to touch any electrical switch or boiler control utilising mains electricity.

The boiler may be installed in a cupboard or compartment, provided it is correctly designed for that purpose, i.e. complies with the Building Regulations and the requirements of BS 6644.

**Propane Gas (LPG):** Installation pipes, cylinders and pressure regulators should be fitted in accordance with BS 5482:1. Bulk tank installation must comply with the requirements of the Home Office code of practice for the storage of liquefied petroleum gas at fixed installations. The boiler **must not** be installed in a room or internal space below ground level, e.g. in a basement or cellar, except where at least one side is open to ground level.

### *3.7 FROST PROTECTION*

The boiler is fitted with a frost thermostat that activates the pump and burner when the system water temperature in the boiler falls below 3°C.

The electrical supply to the boiler must be left on for the thermostat to operate and the selector switch must be set to ON .

### *3.8 CENTRAL HEATING SYSTEM - Fig. 8*

The boiler is designed for use in a sealed central heating system in accordance with the requirements of BS 5449 and BS 6798.

The system should be designed to operate with flow temperatures of up to 85°C. When designing the system, the pump head, expansion vessel size, mean radiator temperature, etc. must all be taken into account. Refer to the pump performance graph for guidelines (see Fig. 1).

To ensure the boiler heat exchanger is protected from contamination, we strongly recommend the use of a barrier heat exchanger when installing these boilers. Barrier heat exchangers are available from Alpha Therm Ltd..

If the boiler is to be used with an open central heating system refer to Fig. 8 and use a barrier heat exchanger (i.e. separates the boiler primary circuit from the open heating circuit).

**Sealed system volume -** An expansion vessel **is not** incorporated into the boiler. An expansion vessel **must be** fitted in the position shown in Fig. 8. To check correct operation of the expansion vessel the system pressure should not be more than 3.5 bar when the system is at maximum operating temperature (for further guidance refer to BS 7074:1), For example an 8 litre expansion vessel is suitable for a sealed system of 80 litres.

The boiler is supplied with the following components built in:-

**Pressure relief valve -** complying with BS 6759 and set to operate at 4 bar. The discharge pipe must be routed clear of the boiler and terminated in such a manner that it can be seen, but cannot cause injury to persons or property.

**Pressure gauge -** To indicate the system pressure to be maintained.

**By-pass -** The boiler has no built-in by-pass, therefore an automatic by-pass is required for the system.

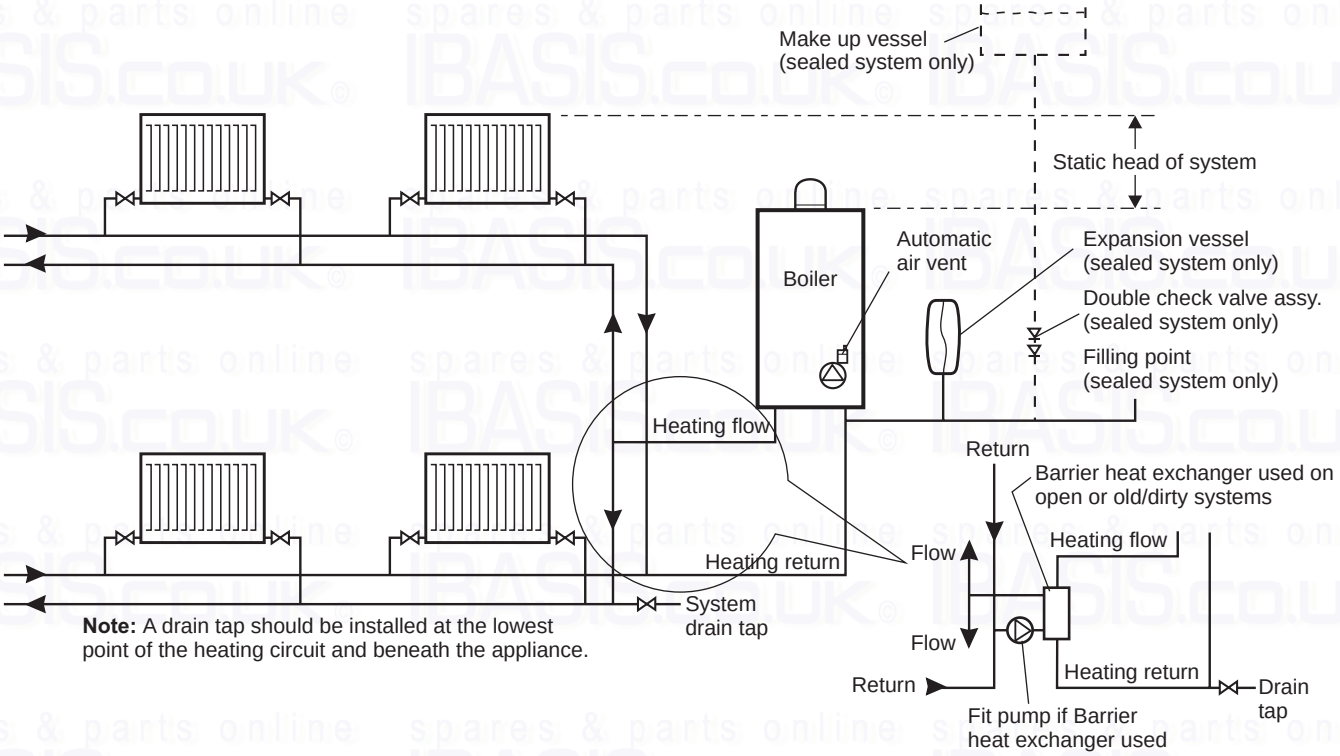


**Fig. 8**

**Installation on a low temperature heating system.**

The boiler can directly feed a low temperature system, varying the maximum delivery temperature of the boiler and setting a value of between 20 and 85°C. To vary the boiler maximum delivery temperature, modify the boiler maximum delivery temperature of parameter No. 4 as described in Section 5.7 and Table 3.

In this mode it is advisable to include a safety limit thermostat set at 55°C in series with the boiler circulating pump. The thermostat must be positioned in the system flow pipe at more than 2 metres from the boiler.

### *3.9 FILLING THE SEALED CENTRAL HEATING SYSTEM - Figs. 9*

The system design pressure (cold) should be set to 1.0 bar. This pressure is equivalent to a static head (see Fig. 8) of 10.2 metres of water.

Provision should be made to replace water lost from the system. This can be by manual or automatic means, as shown in Fig. 9. The position for connecting an automatic make-up vessel is indicated in Fig. 8. A double check valve assembly must be used.

Filling of the system must be carried out in a manner approved by the local Water Undertaking. Where allowed, the system may be filled via a temporary connection as shown in Fig. 9. After filling, always disconnect the flexible hose of the filling loop.

All fittings used in the system must be able to withstand pressures up to 4 bar.

Drain taps (to BS 2879) must be used to allow the system to be completely drained.

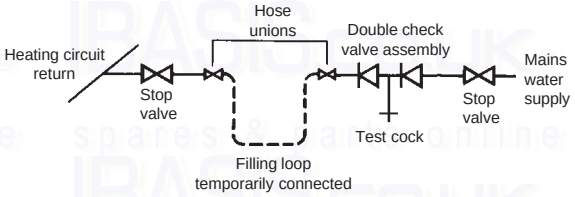


**Fig. 9**

### *3.10 FLUSHING THE HEATING SYSTEM*

It is essential that the central heating system is thoroughly cleaned and flushed when fitting an Alpha CD50S or CD70S boiler. Failure to do so will invalidate the warranty. If this is difficult because the system is old/dirty refer to Section 3.8, Fig. 8 gives consideration to using a barrier heat exchanger.

The primary condensing heat exchanger is constructed in stainless steel and therefore is compatible with most materials used in a heating system.

If a cleaning agent and inhibitor are used, they must be applied in accordance with their manufacturers instructions. Only products from Fernox and Sentinel are acceptable for use with the Alpha CD90S or CD115S boilers. Further information can be obtained from Fernox (Tel: 0179 9521133) or Sentinel (Tel: 0151 4209563).

The system should be flushed in accordance with BS 7593 . The following procedures are recommended:

1. Installing onto a new system:-
   a. Fill the system, vent at high points, at pump and radiators.
   b. Check for leaks.
   c. Rapidly drain the system.
   d. If required, chemically clean the system as instructed by the recommended cleaner manufacturer.
      **Note:** Ensure that the system is flushed to remove any remains of the cleaner.
   e. If chemical cleaner is not used to clean the system:-
      i) Refill the system.
      ii) Switch on the boiler and allow the system to heat up to the normal operating temperature.
      iii) Rapidly drain the system while the water is still hot.
      iv) Refill the system.
   f. As required, add the recommended inhibitor to the system as instructed by the inhibitor manufacturer.
   g. Recheck for leaks.
2. Installing onto an existing system, clean the system before fitting the new boiler:-
   a. If the old boiler is still working:-
      i) Switch on the boiler and allow the system to heat up to the normal operating temperature.
      ii) Rapidly drain the system while the water is still hot.
      iii) Refill and chemically clean the system as instructed by the recommended cleaner manufacturer.
      iv) Ensure the system is flushed to remove any remains of the cleaner.
      v) Fit the new boiler.
   b. If the old boiler is not working:-
      i) Rapidly drain the system.
      ii) Remove the old boiler.
      iii) Flush the system through.
      iv) Fit the new boiler.
      v) Refill and chemically clean the system as instructed by the recommended cleaner manufacturer.
      vi) Ensure the system is flushed to remove any remains of the cleaner.
   c. As required, add the recommended inhibitor to the system as instructed by the inhibitor manufacturer.
   d. Check for leaks.

### *3.11 DISPOSAL OF CONDENSATE*

Provision must be made for the safe disposal of condensate produced by the flue gases of the Alpha CD90S or CD115S boilers and reference should be made to BS 6644 for the requirements on the disposal of condensate.

The boilers incorporate a condensate trap, therefore no additional trap is required.

The condensate should ideally be discharged internally into an internal waste pipe or soil pipe to avoid the possible risk of freezing. The pipework must be in 22 mm pipe.

External pipe runs should be avoided, but if it is necessary, the pipework should be at least 32 mm and protected from the risk of freezing with a waterproof insulation and the length should be kept to a maximum of 3 m. Termination should be into an external gulley or soakaway as shown in Figs. 10 and 11.

**Note:** All pipework must have a continuous fall (see Figs. 10 and 11) from the boiler and must be of an acid resistant material such as plastic waste pipe. (copper or steel is not suitable).

It should be noted that the connection of a condensate pipe to a drain may be subject to local building control requirements.

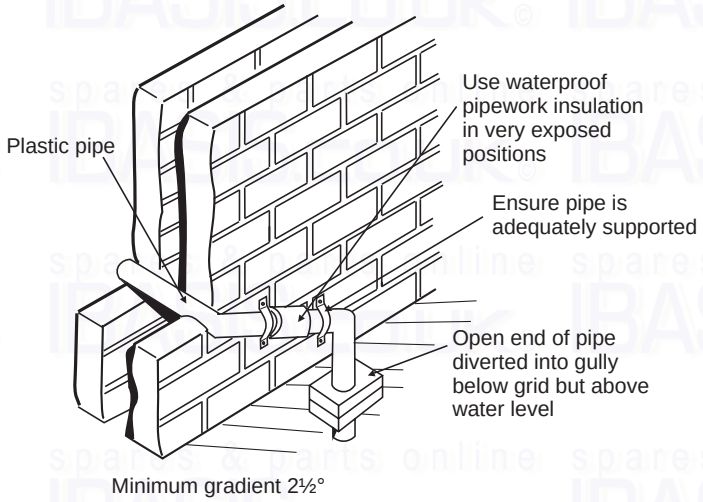


**Fig. 10 - External gully**

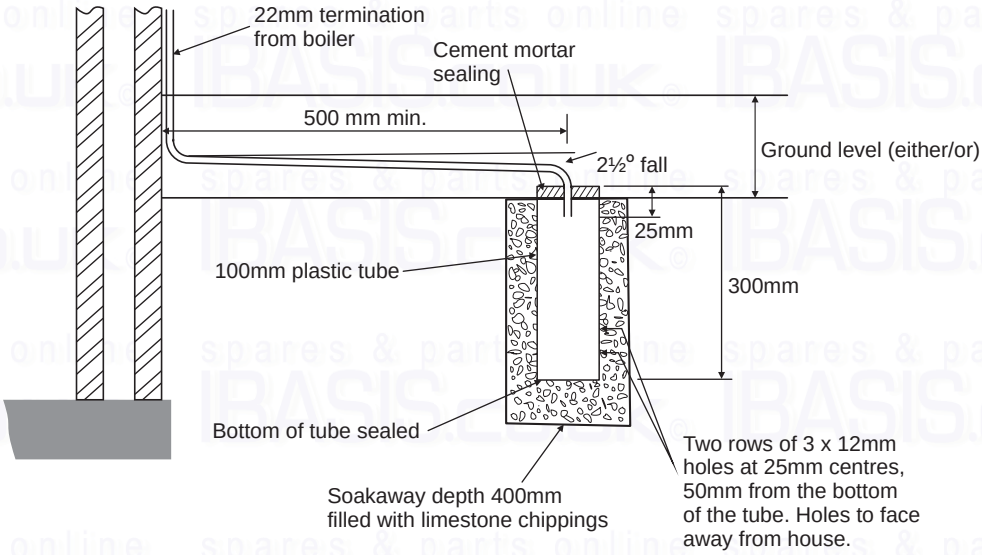


**Fig. 11 - External soakaway**

# 4 INSTALLATION

## 4.1 UNPACKING

1. The basic boiler is supplied in a single box, containing the following:-

   Cased boiler with:-

   Mounting hooks and wall plugs
   Tundish for pressure relief valve outlet
   Condensate discharge pipe
   Gas service cock - 3/4" BSP (CD90S) or 1" BSP (CD115S)
   Literature pack and Wall template

   Other parts of the flue system are supplied in separate packs as ordered.
2. Unpack boiler and remove the loose items.

## 4.2 DIMENSIONS and CONNECTIONS- Fig. 12

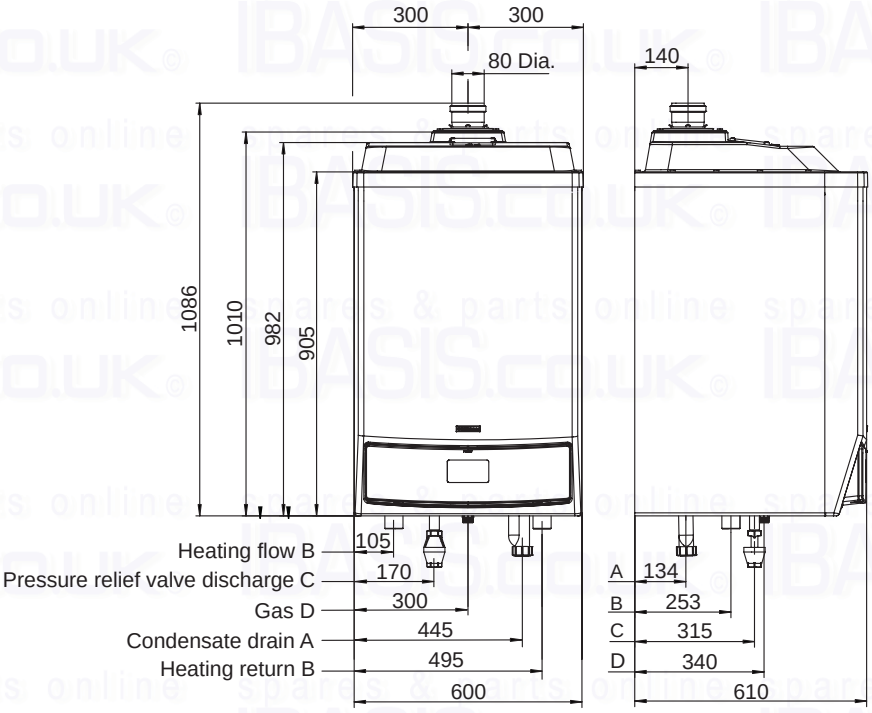


**Fig. 12**

## 4.3 PREPARE THE WALL - Fig. 13

1. Decide upon the position of the boiler taking into account the clearances required for servicing (refer to Section 2.5) and the flue terminal position.
2. Tape the template to the wall (ensure it is level and the right way up). Mark the position of the two holes for the boiler mounting hooks, and the centres of the flow, return, gas and discharge connections.
3. Drill the fixing holes (12 mm dia.) to accept the No.12 plugs supplied. Screw the boiler mounting hooks fully into the plugs.
4. Cut suitable holes in the wall/roof 100 mm dia for open flue 80 mm dia. pipe or 127 mm dia. for concentric flue. Use the centre line positions given on the flue template.
5. Lift the boiler and locate it on the mounting hooks.

**Note:** When handling or lifting always use safe techniques - keep your back straight, bend your knees, don't twist - move your feet, avoid bending forwards and sideways and keep the load as close to your body as possible.
Where possible transport the boiler using a sack truck or other suitable trolley.
Always grip the boiler firmly, and before lifting feel where the weight is concentrated to establish the centre of gravity, repositioning yourself as necessary.

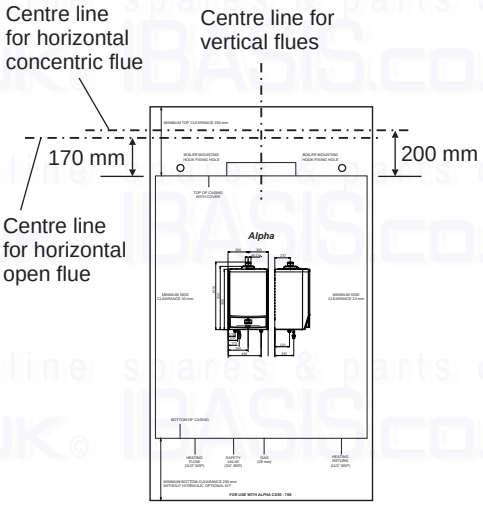


**Fig. 13**

### 4.4 CONNECT THE PIPEWORK - Fig. 12

1. Thoroughly flush out all the water pipework. Refer to Section 3.10.
2. Connect the system flow and return pipework to the boiler using suitable isolating valves.
   **Note:** Do not forget that the pressure relief valve discharge pipe must be routed clear of the boiler to a drain in such a manner that it may be seen, but cannot cause injury to persons or property.
3. Connect the 22 mm condensate trap drain pipe to the condensate discharge pipe using the clip supplied.
   Ensure that the condensate discharge pipe is as required in Section 3.11.
   Pour at least 0.5 litre of water into the flue duct, as shown in Fig. 14, and check the condensate discharge pipe for soundness
4. Ensure that all the valves are closed and do not turn on the water or gas supplies at this stage.

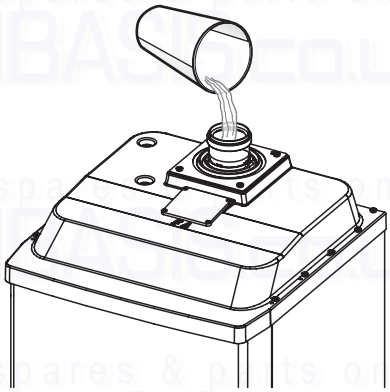

**Fig. 14**

### 4.5 'B23' TYPE SINGLE PIPE 80 mm FLUE KITS

***Vertical kit - see Figs. 15 and 16, and refer to Section 3.4.***

Fig. 17 shows the vertical flue kit parts.

To assemble the kit to the boiler - Slide the flue pipe down through the roof seal and place the seal over the flue duct. Push the flue duct into the flue socket on top of the boiler up to the stop. Ensure the seal is pushed in position against the ceiling.

The maximum vertical length (without bends) for flue pipe is 17 m (CD90S) or 14 m (CD115S) (see Figs. 15 and 16).

To install extensions or other flue components, proceed as follows: fit the male end of the pipe or elbow up to the stop on the female socket (with lip seals) of the previously installed component, this will ensure a secure fit and seal of the joints. Ensure all joints have the seal located correctly and the tape supplied is applied around each joint to ensure the flue ducts cannot be pulled apart.

It is recommended that the flue should be supported approximately every 1.5 m with access provided to the joints.

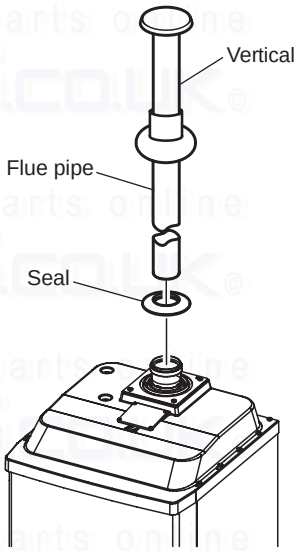


**Fig. 15**

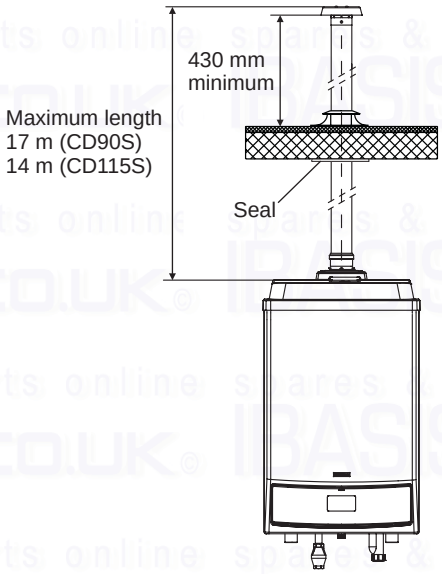


**Fig. 16**

***Horizontal through the wall kit - see Figs. 17 and 18, and refer to Section 3.4.***

Fig. 17 shows the horizontal through the wall kit parts.

To assemble the kit to the boiler - Fit the male end of the flue elbow into central flue outlet on the top of the boiler to the stop. Place the outer seal over the flue duct and slide it throught the wall from the outside. Place the inner seal over the flue duct then insert the duct into the elbow up to the stop. Slide the seals along the duct to seal it to the inside and outside of the wall.

To install extensions or other flue components, proceed as follows: fit the male end (smooth) of the pipe or elbow up to the stop on the female socket (with lip seals) of the previously installed component, this will ensure a secure fit and seal of the joints.

**Extensions for flue kit -** The maximum vertical/horizontal straight length (without flue bend) is 17 m (CD90S) or 14 m (CD115S) (refer to Section 3.4).

**Note:** To prevent condensate lying in the flue pipe, slope the pipe towards the boilers with a minimum slope of 2.5° - 3° (25 - 30 mm per metre). When installing the extensions, a wall/ceiling mounted clamp must be installed every 1.5 metres.

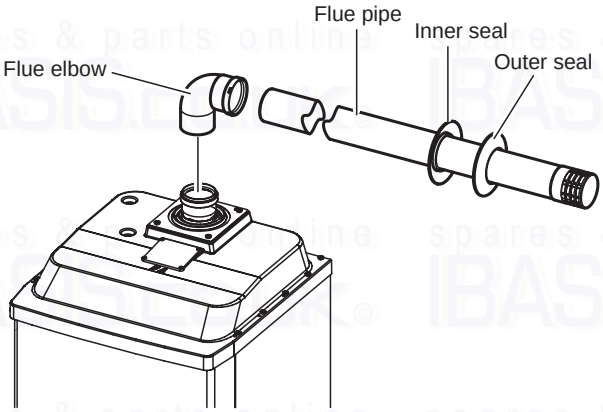


Fig. 17

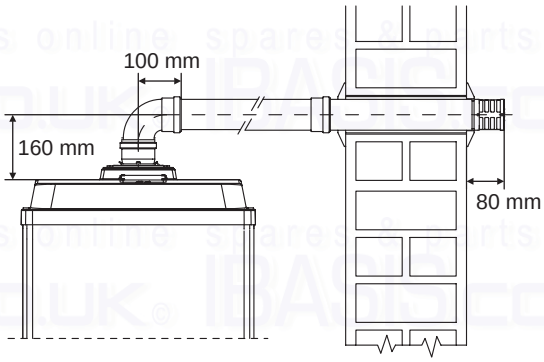


**Note:** Ensure the flue slopes downwards towards the boiler by a minimum of 25 to 30 mm per metre (2.5° to 3°)

Fig. 18

### *4.6 'C' TYPE CONCENTRIC FLUE KITS*

Convert the boiler from the factory supplied 'B23' type configuration to 'C' type, i.e. room sealed concentric flue by removing the 80 mm dia. adaptor and four screws securing the fixing plate and gasket from the top of the boiler.

***Horizontal through the wall concentric flue kit - see Figs. 19 and 20.***

Fig. 19 shows the flue kit parts that need to be fitted to the boiler to ensure the room sealed concentric flue can be used.

To assemble the kit to the boiler - Fit the adapter into the central flue outlet on the top of the boiler up to the stop. Slide the square gasket over the adapter up to the groove, then fix it to the cover by means of the previously removed fixing plate and four screws. Fit the male end of the flue elbow up to the stop on the adapter. Place the outer seal over the concentric flue pipe and slide it throught the wall from the outside. Place the inner seal over the concentric flue pipe then insert the pipe into the elbow up to the stop. Slide the seals along the duct to seal it to the inside and outside of the wall.

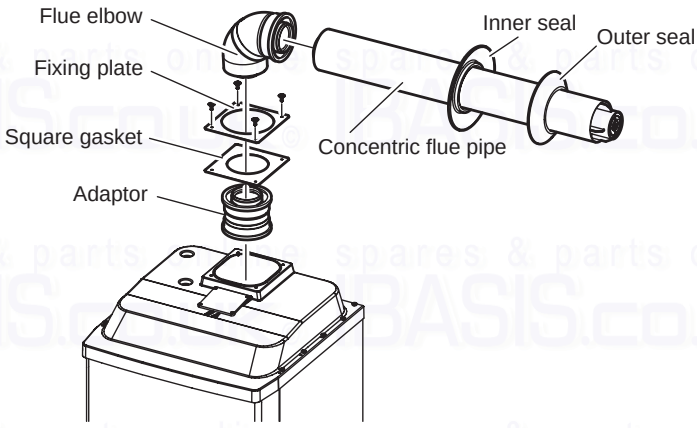


Fig. 19

To install extensions or other flue components, proceed as follows: fit the male end (smooth) of the concentric pipe or concentric elbow up to the stop on the female socket (with lip seals) of the previously installed component, this will ensure a secure fit and seal of the joints.

**Extensions for horizontal kit -** The horizontal kit can be extended up to a maximum horizontal distance of 10 m (CD90S) or 14 m (CD115S) (Fig. 20), including the flue terminal and excluding the flue bend on the boiler (refer to Section 3.4).

**Note:** To prevent condensate lying in the flue pipe, slope the pipe towards the boilers with a minimum slope of 3° (25 - 30 mm per metre). When installing the extensions, a wall/ceiling mounted clamp must be installed every 1.5 metres.

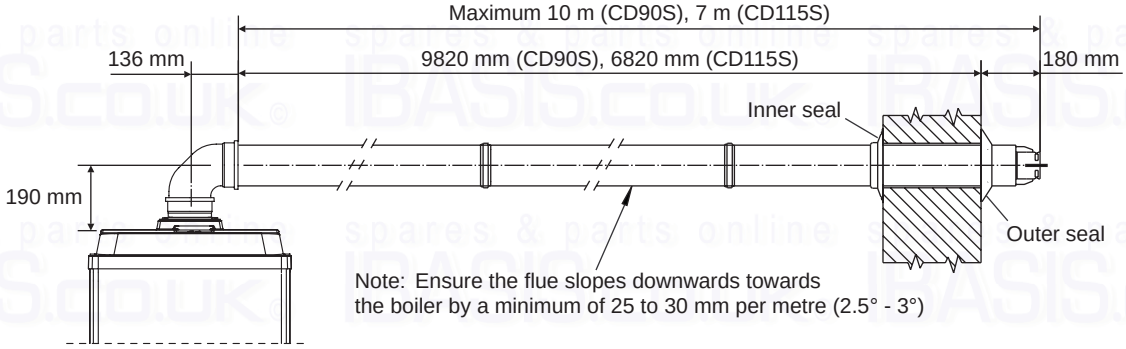


Fig. 20

### *4.7 CONNECT THE MAINS SUPPLY - Fig. 2*

1. Remove the four screws securing the plastic top cover so that it can be lifted slightly at the front edge.
2. Remove the two fixing screws (one each side at the bottom) securing the case front panel (refer to Fig. 23). Pull the bottom of the panel outwards while pushing up at the same time and remove the panel then remove the two screws securing the control panel and lower the panel to gain access to the terminal block. Refer to Technical Data, Section 2.10 for connection details.
3. **Note:** This boiler has been fitted with a mains supply cable. However, if it is necessary to fit an alternative supply cable, ensure the cable clamp that has been fitted is removed and connect as follows:-
   Pass the mains supply cable through the cable clamp and connect as follows:- Brown to L, Blue to N and Green/Yellow to ⏚. Ensure correct polarity.
   **Note:** Ensure that the length of the earth wire is such that if the supply cable is pulled out of its clamp the live and neutral wires become taut before the earth wire.
   Do not switch on the electrical supply at this stage.
4. **If any external control, i.e. room thermostat etc. is to be fitted, refer to Fig. 2.**
   **Note: All external control connections are less than 24 volts.**
   **Do not connect** 230/240 volts to any of the terminals G to Z on the X86 terminal block or to the X84 terminal block.
5. Ensure that there is sufficient free cable to allow the control panel to be raised and lowered then tighten the cable clamp screws.
6. Leave the control panel open until commissioning procedures have been completed.
7. Carry out electrical system checks - Short circuit, Polarity, Earth continuity and Resistance to earth with a suitable multimeter.

# 5 COMMISSIONING

**When commissioning the boiler, ensure the Benchmark Checklist is completed.**

## *5.1 FILL THE SYSTEM*

1. The boiler is fitted with an automatic air vent positioned as shown in Fig. 3, ensure that the vent is always open.
2. Open any central heating flow and return valves.
3. Open the fill point valve on the filling loop until water is heard to flow.
4. To remove the air - Vent each radiator in turn, starting with the lowest in the system.
5. It is important that the pump is properly vented to avoid it running dry and damaging its bearings. Unscrew and remove the cap from the centre of the pump. Using a suitable screwdriver rotate the exposed spindle about half a turn, then replace the cap.
6. Check the operation of the pressure relief valve (see Fig. 3) by turning the head anti-clockwise until it clicks. The click is the valve lifting off its seat allowing water to escape from the system - check that this is actually happening.
7. Continue to fill the system until the pressure gauge indicates 1.0 bar. Close the fill point valve and check the system for water soundness, rectifying where necessary. Disconnect the filling loop from the mains supply. If the system has been over pressurised water may be released from the system by manually operating the drain point (see Fig. 3) until the system design pressure is obtained. The system design pressure (cold) should be between 0.75 and 1.25 bar. **Refer to Sections 3.9 and 3.10. Filling and Flushing the system.**

## *5.2 TEST FOR GAS TIGHTNESS AND PURGE THE SUPPLY*

1. With the boiler gas service cock closed. Pressure test the gas supply and inlet pipework connection to the boiler gas service cock for tightness in accordance with BS 6891.
2. Loosen the gas inlet pressure test point screw on the gas valve (see Fig. 21). Ensure the gas supply is on and open the boiler service cock to purge in accordance with BS 6891.
3. Retighten the test point screw and test for gas tightness. Close the boiler gas service cock.

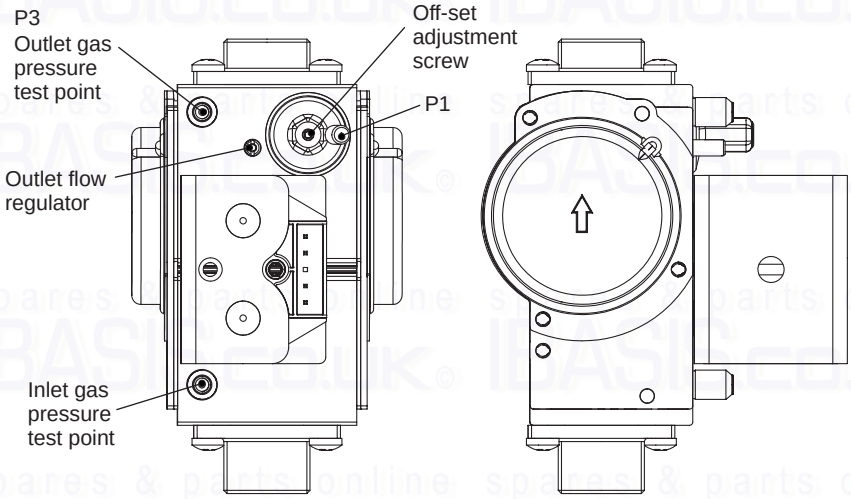


**Fig. 21**

## *5.3 BOILER CONTROLS - Fig. 22*

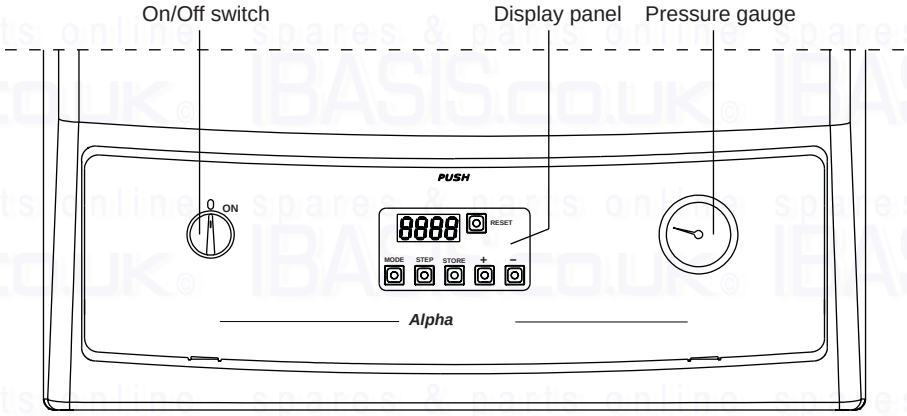


**Fig. 22**

## *5.4 INITIAL LIGHTING - Refer to Fig. 22*

1. Ensure that the gas and electrical supplies to the boiler are off and that any heating flow and return valves are open.
2. Turn on the gas and electrical supplies to the boiler.
3. Ensure any external controls are calling for heat.
4. Set the On/Off switch to ON. The boiler will now run in the central heating mode. The pump will start, the fan will start and the main gas valve solenoid will open allowing the main burner to light.

## 5.5 BOILER DISPLAY PANEL AND FUNCTION MODES

The boiler display panel (see Fig. 22), is composed of a 4-character display and 6 keys. By using these keys it is possible to adjust the boiler as it would be by using traditional selector switches and knobs.

Table 1 gives the function of each key.

| | |
|---|---|
| RESET | Manual reset for possible boiler block |
| MODE | Display menu selection key |
| STEP | Selection of parameter to be displayed or edited |
| STORE | Data and storage confirmation key |
| + | Increase set value |
| - | Decrease set value |

**Table 1**

When the boiler is operating, the 4-figure display indicates the mode code (by means of the first 2 figures on the left) and the boiler flow temperature (by means of the other two figures on the right).

For example if these values are shown on the display it means that the boiler is operating in heating mode with a flow temperature of 60°C.

The boiler function modes are given in Table 2:

| Mode code | Mode description |
|---|---|
| 0 | Stand - by, no operation demand |
| 1 | Pre-ventilation |
| 2 | Burner ignition |
| 3 | Burner lit (system heating) |
| 4 | Burner lit (domestic hot water) |
| 5 | Fan check |
| 6 | Burner off, requested temperature reached |
| 7 | Pump over-run in system heating mode |
| 8 | Pump over-run in domestic hot water mode |
| 9 (flashing) | Burner off for one of the reasons given in Table 8 in Section 8 |
| A | 3 - way valve check |

**Table 2**

## 5.6 BOILER FUNCTIONING PARAMETERS

**PARAMETER Mode -** Press the MODE key once to enter Parameter mode. In this mode the preset operational values can be changed. The first two figures indicate the parameter number, the last two give the setting value. To change the boiler settings proceed as follows:

1. Press the MODE key once to enter parameter mode, using the STEP key select the parameter to be changed.
2. Change the value using the + or - keys, press the STORE key to store the new value.
3. Press MODE to make the new value effective.

Parameters that can be modified are given in Table 3.

| Parameter | Description | Lower limit value | Upper limit value | Factory set | New value |
|---|---|---|---|---|---|
| 1 | Domestic hot water setting value * | 20°C | 70°C | 20°C | |
| 2 | Domestic hot water functioning mode | 0 = disabled<br>1 = enabled<br>2 = disabled + continuous pump<br>3 = enabled + continuous pump | | 0 | |
| 3 | Heating function mode | 0 = disabled<br>1 = enabled<br>2 = disabled + continuous pump<br>3 = enabled + continuous pump | | 1 | |
| 4 | Max. heating flow temperature | 20°C | 85°C | 85°C | |

***** Only active with hot water function enabled when external accessories are fitted.

**Table 3**

**Parameter 1:** Allows domestic hot water temperature to be set if controlled with NTC probe.

**Parameter 2:** Allows domestic hot water production to be activated or cut out. With factory settings domestic hot water production is cut out.

**Parameter 3:** Allows system heating function (Summer) to be cut out, or enabled (Winter). With factory settings system heating is on.

**Parameter 4:** Allows heating flow temperature to be set. If the external temperature probe is connected to the boiler, the electronics automatically determine the ideal system water temperature. This parameter represents the maximum temperature that the system delivery water can reach.

**INFO Mode -** Press the MODE key twice to enter INFO mode. In this mode the instantaneous operational values can be displayed and checked, but without making changes. The first two figures indicate the step number; the last two give the setting value.

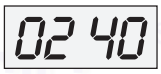


For example if these values are shown on the display it means that the boiler is operating in heating mode with a return temperature of 40°C.

| Step | Visulisation | Value |
|---|---|---|
| 1 | Flow temperature | Value in °C |
| 2 | Return temperature | Value in °C |
| 3 | Not active (Domestic temp., if domestic circuit probe is present) | -36 (value in °C) |
| 4 | Not active (External temp., if probe is installed) | -36 (value in °C) |
| 6 | Flow temperature set point | Value in °C |
| 7, 8, 9 | Temperature gradients (cannot be modified) | °C/S |
| E | Flame current value | µA |

**Table 4**

### *5.7 BOILER FUNCTIONING PARAMETERS*

Tables 5 and 6 gives the boiler adjustment parameters with factory settings. To modify the parameters reserved for the Installer, it is necessary to enter an access code, which can be supplied on request.

To enter the code:

1. Press the MODE and STEP keys at the same time for 2 seconds; the display will show the wording CODE and subsequently a random number on the last two digits.
2. Change the value by operating the + or - keys until reaching the correct code.
3. Press the STORE key to confirm.

**Possible settings for the Installer and User (without entering an access code)**

| Parameter | Description | Lower limit value | Upper limit value | Factory set | New value |
|---|---|---|---|---|---|
| 1 | Domestic hot water set point value | 20°C | 70°C | 20°C | |
| 2 | Domestic hot water functioning mode | 0 = disabled<br>1 = enabled<br>2 = disabled + continuous pump<br>3 = enabled + continuous pump | | 0 | |
| 3 | Central heating functioning mode | 0 = disabled<br>1 = enabled<br>2 = disabled + continuous pump<br>3 = enabled + continuous pump | | 1 | |
| 4 | Max, central heating flow temperature | 20°C | 85°C | 85°C | |

**Table 5**

**Settings accessible by the Installer only**

| Parameter | Description | Lower limit value | Upper limit value | Factory set | New value |
|---|---|---|---|---|---|
| 10 | Minimum heating flow temperature | 15°C | 60°C | 20°C | |
| 11 | Lower external temperature limit | -30°C | 10°C | -5°C | |
| 12 | Upper external temperature limit | 15°C | 25°C | 20°C | |
| 13 | Antifreeze temperature | -30°C | 10°C | 0°C | |
| 14 | External probe reading correction | -5°C | 5°C | 0°C | |
| 15 | Max. secondary heating circuit temperature | Not active | | | |
| 16 | Min. secondary heating circuit temperature | Not active | | | |
| 17 | Secondary heating circuit temp hysteresis | Not active | | | |
| 18 | Min. tempearature set point value | 0 = Off<br>1°C | 60°C | 0°C | |
| 19 | Booster time | 0 = no booster<br>1 minute | 30 minutes | 0°C | |
| 20 | Flow temp compensation with ambient temp | 0°C | 80°C | 0°C | |
| 21 | Temp increase rel to DHW set point | 0 | 30°C | 15°C | |
| 22 | Max fan rpm in heating mode (x100) | 15 CD90S<br>17 CD115S | 60 CD90S<br>65 CD115S | 59 CD90S<br>59 CD115S | |
| 23 | Max fan rpm in heating mode (units) | 0 | 99 | 0 | |
| 24 | Max fan rpm in DHW mode (x100) | 15 CD90S<br>17 CD115S | 38 CD90S<br>65 CD115S | 38 CD90S<br>38 CD115S | |
| 25 | Max fan rpm in DHW mode (units) | 0 | 99 | 0 | |
| 26 | Min fan rpm in heating mode (x100) | 12 CD90S<br>15 CD115S | 60 CD90S<br>65 CD115S | 17 CD90S<br>17 CD115S | |
| 27 | Min fan rpm in heating mode (units) | 0 | 99 | 50 | |
| 28 | Fan rpm during ignition (x100) | 21 | 27 | 23 | |
| 29 | Fan rpm during stabilisation period (x100) | 12 CD90S<br>18 CD115S | 38 CD90S<br>38 CD115S | 16 CD90S<br>20 CD115S | |
| 30 | Stabilisation period | 0 | 900 | 06 | |
| 31 | Heating mode ramp up | 0 | 15 | 2 | |
| 32 | Pump overrun at end of heating cycle | 0 = 10<br>1 minute | 99 minutes | 3 | |
| 33 | Pump overrun at end of DHW cycle | 0 seconds | 300 seconds | 60 | |
| 34 | Hysteresis modulation with heating ON | 0°C | 20°C | 0°C | |
| 35 | Hysteresis modulation with heating OFF | 0°C | 10°C | 5°C | |
| 36 | Hysteresis modulation with DHW ON | -5°C | 30°C | 0°C | |
| 37 | Hysteresis modulation with DHW OFF | 0°C | 30°C | 5°C | |
| 38 | Hysteresis measurement with DHW ON | 0°C | 30°C | 5°C | |
| 39 | Hysteresis measurement with DHW OFF | -5°C | 30°C | 0°C | |
| 40 | Heating mode timer | 0 | 300 seconds | 180 | |
| 41 | DHW timer | 0 | 300 seconds | 0 | |
| 42 | DHW heating mode transition timer | 0 = phase with burner on<br>30 = phase with burner off 10 s | | 0 | |
| 43 | Max time with DHW prioritised | 0 min | 120 min | 0 min | |
| 44 | Cascade address | Not active | | | |
| 45 | Control type for heating installation | 00 = ambient temp stat<br>01 = external probe<br>02 = 0 - 10 V power<br>03 = 0 - 10 V temperature | | 00 | |
| 46 | Type of DHW installation | 00 = instantaneous with probe<br>01 = instantaneous no probe<br>02 = Boiler with probe<br>03 = Boiler without probe | | 02 | |
| 47 | Manual fan speed | 1 = Off<br>0% | 100% | -1 | |
| 48 | PWM signal level for pump | 1 | 4 | Not active | |

**Table 6**

| Parameter | Description | Lower limit value | Upper limit value | Factory set | New value |
|---|---|---|---|---|---|
| 49 | PWM signal level for pump | 10 | 50 | Not active | |
| 50 | PWM signal level for pump | 15 | 50 | Not active | |
| 51 | PWM hysteresis | 1°C | 10°C | Not active | |
| 52 | PWM pump high/low level | 16 | 255 | Not active | |
| 53 | Low/Off and pump cycle | x0 = Off<br>x1 = On<br>0x = Normal heating pump cycle<br>0x = Normal DHW pump cycle | | 00 | |
| 54 | Min rpm for pressure switch (x100) | 5 | 70 | 5 | |
| 55 | Min temp for boiler maintain function | 0°C | 80°C | 0°C | |
| 56 | Ramp up for HTG or HTG + DHW function | 0 (heating only) | 1 (HTG + DHW) | 0 | |
| 57 | Pre-ignition time | Not active | | | |

**Table 6 - *continued***

## *5.8 FINAL COMMISSIONING*

1. Allow the heating system to heat up, then balance the system to achieve the necessary temperature difference across the heating flow and return pipes at the boiler and check the system volume and pressure. (Refer to Technical Data, Section 2.2).
2. Turn off the boiler.
4. Thoroughly flush out the water pipework (refer to Section 3.10).
5. Re-pressurise the system as described in Section 5.1.

## *5.9 FINAL ASSEMBLY*

1. Raise and secure the control panel, replace the front cover and secure in position with the screws removed and secure the plastic top cover in position using the screws previously removed.
2. If the boiler is to be left in service with the User, set any external controls to the User's requirements.
3. If the boiler is not to be handed over immediately, close the boiler gas service cock and switch off the electrical supply.
4. If there is any possibility of the boiler being left during frost conditions, then the boiler and system should be drained. It is recommended that a label is attached to the boiler drawing attention to the fact that the system has been drained.
5. Complete the details of the installation in the Benchmark Checklist on page 31.

## *5.10 USER INFORMATION*

The User must be advised (and demonstrate if necessary) of the following important points:-

1. How to light and turn off the boiler and how to operate any external system controls.
2. The importance of annual servicing of the boiler to ensure safe and efficient operation.
3. That any servicing or replacement of parts must only be carried out by Gas Safe registered personnel.
4. Ensure that the boiler controls are set to the User's requirements.
5. Tell the User about the sealed system pressure.
6. Tell the User that if the electrical supply is on and the boiler has not operated for 24 hours for heating or hot water, the pump will automatically operate for 5 minutes.
7. Explain to the User that an internal frost thermostat is fitted in the boiler, and that the electrical supply to the boiler must be left on for the thermostat to operate, i.e. the On/Off switch must be set to ON.
8. Explain to the User that in certain weather conditions the terminal will emit a plume of steam, i.e. water vapour. This is safe and quite normal.
9. Show the User the position of the pressure relief valve and condensate discharge pipes.
10. Hand the User's instructions to the User.
11. Ensure the Benchmark Checklist on page 31 has been completed after the boiler has been installed and commissioned.

    **Note:** It may require that the installation is registered by the installer through the Gas Safe Work Notification Scheme.
12. Leave these Installation and Servicing instructions with the User for use on future calls.

# 6 ROUTINE SERVICING

To ensure efficient operation of the boiler it is recommended that it is checked and serviced as necessary at regular intervals. The frequency of servicing will depend upon the particular installation conditions and usage, but in general once per year should be adequate.

It is the law that any service work must be carried out by a competent person, i.e. Gas Safe registered personnel.

**Warning:** Before servicing the boiler, isolate the electrical supply and close the boiler gas service cock. Allow the boiler to cool.

The data label is positioned on the inside of the right hand of the base plate.

Always test for gas tightness after servicing any gas carrying components.

Always carry out electrical system checks i.e. Earth Continuity, Resistance to Earth, Short Circuit and Polarity with a suitable meter after servicing.

**Notes: 1.** Prior to servicing, it is recommended that a flue gas analyser is used to measure the performance of the boiler (refer to Fig. 3 or 4 for the position of the flue sampling point). If the $CO/CO_2$ ratio measured is greater than 0.003 **or** when other checks and comments from the customer have indicated that there may be problems, cleaning of the heat exchanger will be necessary. All Sections 6.1, 6.2, 6.3 and 6.4 **must** be carried out. Repeat the flue gas analyser test after reassembling the boiler and check that the $CO/CO_2$ ratio is less than 0.003.

**2.** If the $CO/CO_2$ ratio measured is less than 0.003 and other checks and comments from the customer suggest there are no problems then only Section 6.1 and Section 6.2 paragraphs 1, 2 and 3 need to be carried out to allow a visual check of the components within the combustion chamber.

**3.** If a flue gas analyser is not available, then all Sections 6.1, 6.2, 6.3 and 6.4 **must** be carried out.

## *6.1 IMPORTANT NOTES PRIOR TO SERVICING*

1. Check the flue terminal outside and ensure it is not blocked.
2. Run the boiler and check the operation of its controls.
3. Refer to Fig. 3 or 4 for location of flue sampling point.
4. Ensure that all system connections and fittings are sound.
5. Refill, vent and re-pressurise the system as necessary. (Refer to Commissioning, Section 5.1).
   If the system pressure exceeds 3.5 bar when operating at maximum temperature, the heating expansion vessel should be checked and re-pressurised, if necessary.
   **Note:** Check the expansion vessel charge only when the system pressure is zero.
6. Check that the condensate trap drain pipe is connected and all joints are sound.
7. Record details of the service in the Service Record Section on page 32.

## *6.2 CASING REMOVAL - Fig. 23*

If required, the casing can be completely removed as follows:

1. Remove the bottom cover plate by removing its four fixing screws.
2. Remove the two screws (item 1) securing the bottom of the casing front panel (item 5).
3. Remove the screws (item 7) at the top of the cover (item 6).
4. Pull the bottom of the casing front panel outwards while pushing upwards at the same time to remove it from the boiler.
5. Remove the two screws (item 2), each side, securing the side panels to the front support bracket.
6. Remove the screws (item 3) at the bottom side of the boiler securing the bottom of the side panel (item 4), then push upwards in order to remove the side panel.

**Note:** If only the front panel is to be removed, remove the four screws securing the plastic top cover so that it can be lifted slightly at the front edge. Remove the two fixing screws (item 1) (one each side at the bottom) securing the case front panel. Pull the bottom of the panel outwards while pushing up at the same time and remove the panel

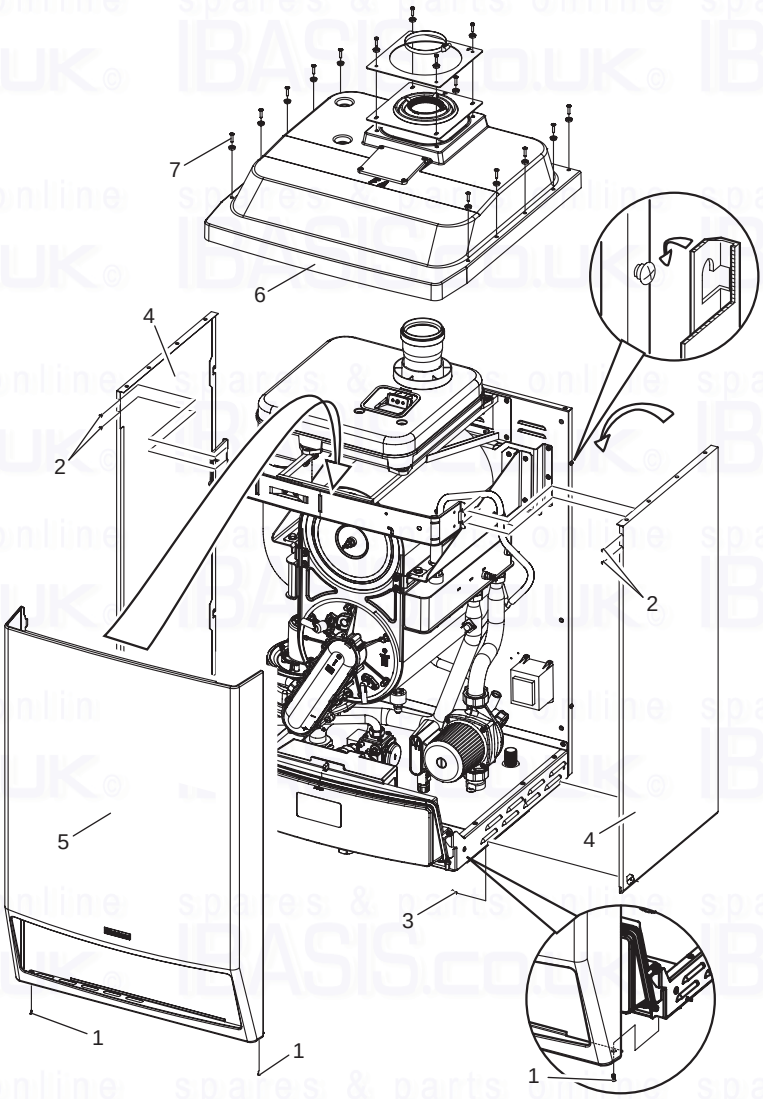


**Fig. 23 - Case removal**

### *6.3 PREPARE FOR SERVICING - Fig. 23 and 24*

1. Ensure the electrical supply is isolated and the gas supply is off.
2. Remove the complete case or just the front panel as described in Section 6.2.
4. Disconnect the gas supply pipe union from the burner manifold.
5. Remove the two screws securing the fan assembly to the combustion chamber front.
6. Remove the pressure tube.
7. Disconnect the electrode lead from the spark electrode and the in-line connector to the flame sensing electrode.
8. Remove the six nuts and washers securing the combustion chamber front assembly and remove the assembly.

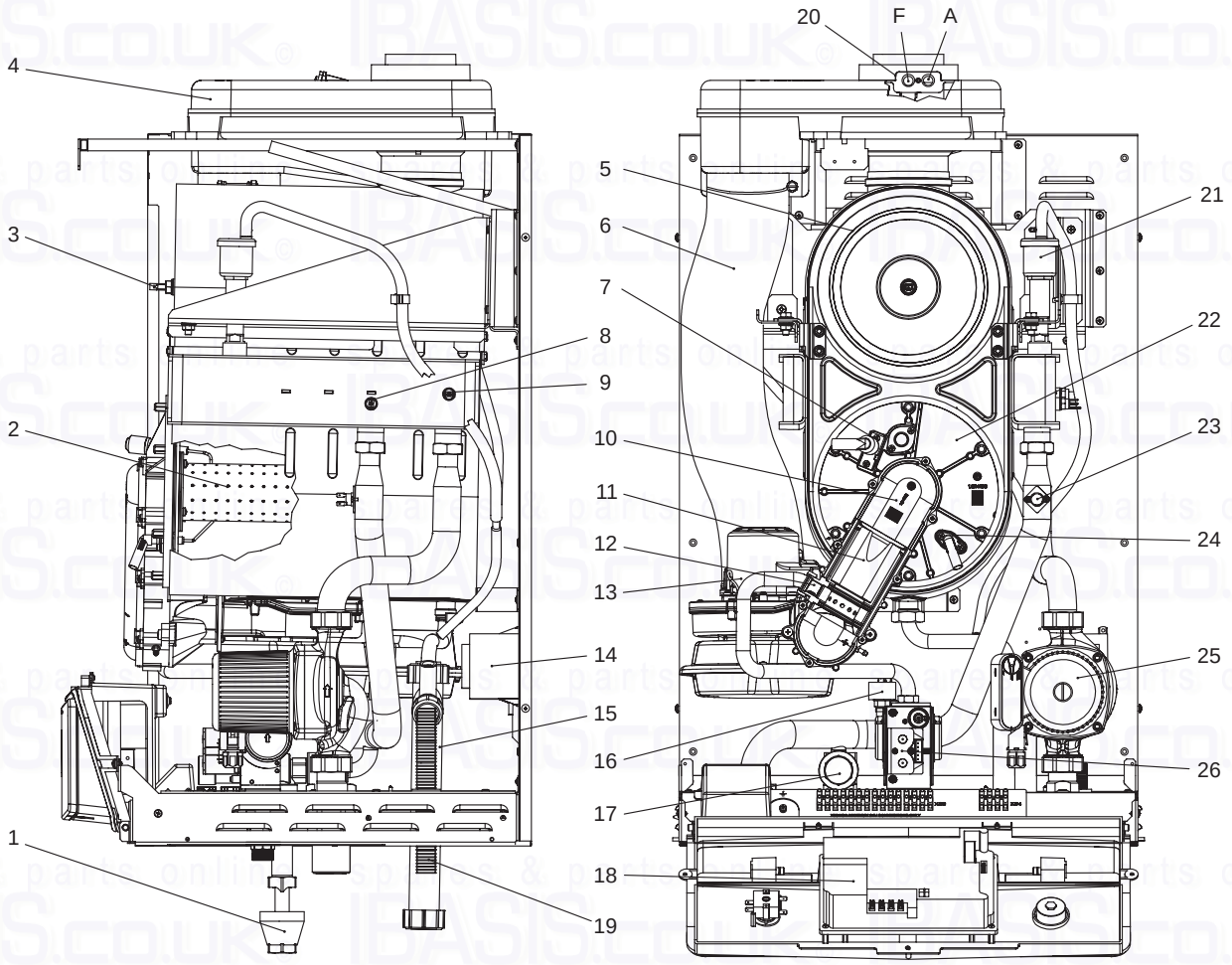


| | | | |
|---|---|---|---|
| 1 | Tundish | 14 | Transformer |
| 2 | Burner | 15 | Condensate drain trap |
| 3 | Flue temperature sensor | 16 | Pressure switch |
| 4 | Flue hood | 17 | Safety valve 4 bar |
| 5 | Condensing heat exchanger | 18 | PCB |
| 6 | Air intake pipe | 19 | Condensate drain pipe |
| 7 | Ignition electrode | 20 | Sample points (A - air, F - flue gas) |
| 8 | Primary flow NTC | 21 | Automatic air vent |
| 9 | Primary return NTC | 22 | Combustion chamber front cover |
| 10 | Venturi housing | 23 | Overheat thermostat |
| 11 | Venturi | 24 | Ignition sensor |
| 12 | Injector | 25 | Pump |
| 13 | Fan | 26 | Gas valve |

**Fig. 24**

## 6.4 CLEANING THE BOILER

1. Remove any deposits from heat exchanger using a suitable soft brush. Do not use a brush with metallic bristles.
2. Check the condition of the combustion chamber insulation panels.
3. Check the condition of the burner injector on the combustion chamber front assembly, carefully clean them with a soft brush if necessary.
   Do not use a brush with metallic bristles as this might damage the injector.
4. Remove any deposits from the heat exchanger coils. This can be done by suction or water sprayed onto the coils. Ensure all electrical components are protected from water. Any water used to clean the heat exchanger will drain to the condensate trap.
5. Unscrew and replace the injector should it appear damaged.
6. Remove the four screws securing the burner and remove the burner. Clean the burner with a soft brush and check that the flame ports are clear. Blockages may be removed with a stiffer brush. Tap the burner, open end down, to remove any deposits from inside.
7. Check the condition of the electrodes.
9. Check the spark gap, positioning and height of the electrodes. Refer to Fig. 25.
10. Unscrew the condensate trap drain cap to remove any deposits.
    **Note:** Before removing the cap, ensure that the water released from the trap can be contained to avoid spillage. The trap will contain no more than 200 cc of condensate water. Replace the drain cap.

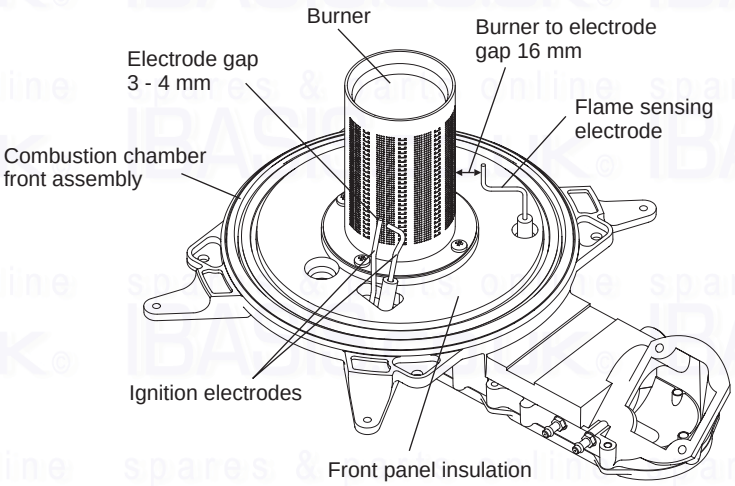


**Fig. 25**

## 6.5 RE-ASSEMBLE THE BOILER

1. Replace the burner, ensuring it is located correctly and secure it in position using the four screws previously removed.
   **Important:** Before replacing the combustion chamber front assembly, pour at least 200 cc of water into the coils of the heat exchanger. This is to ensure the condensate trap is full of water before operating the boiler.
2. Replace the combustion chamber front assembly, ensuring it is correctly located.
3. Ensure the electrode lead is connected.
4. Re-connect the gas pipe to the manifold, test the connections for gas tightness and re-commission, Sections 5.2 and 5.4.
5. Place the case or front case panel in position and secure in position with the screws previously removed, see Section 6.2.
7. Check the operation of the boiler.
8. Return all controls to their original settings.

# 7 WIRING DIAGRAM

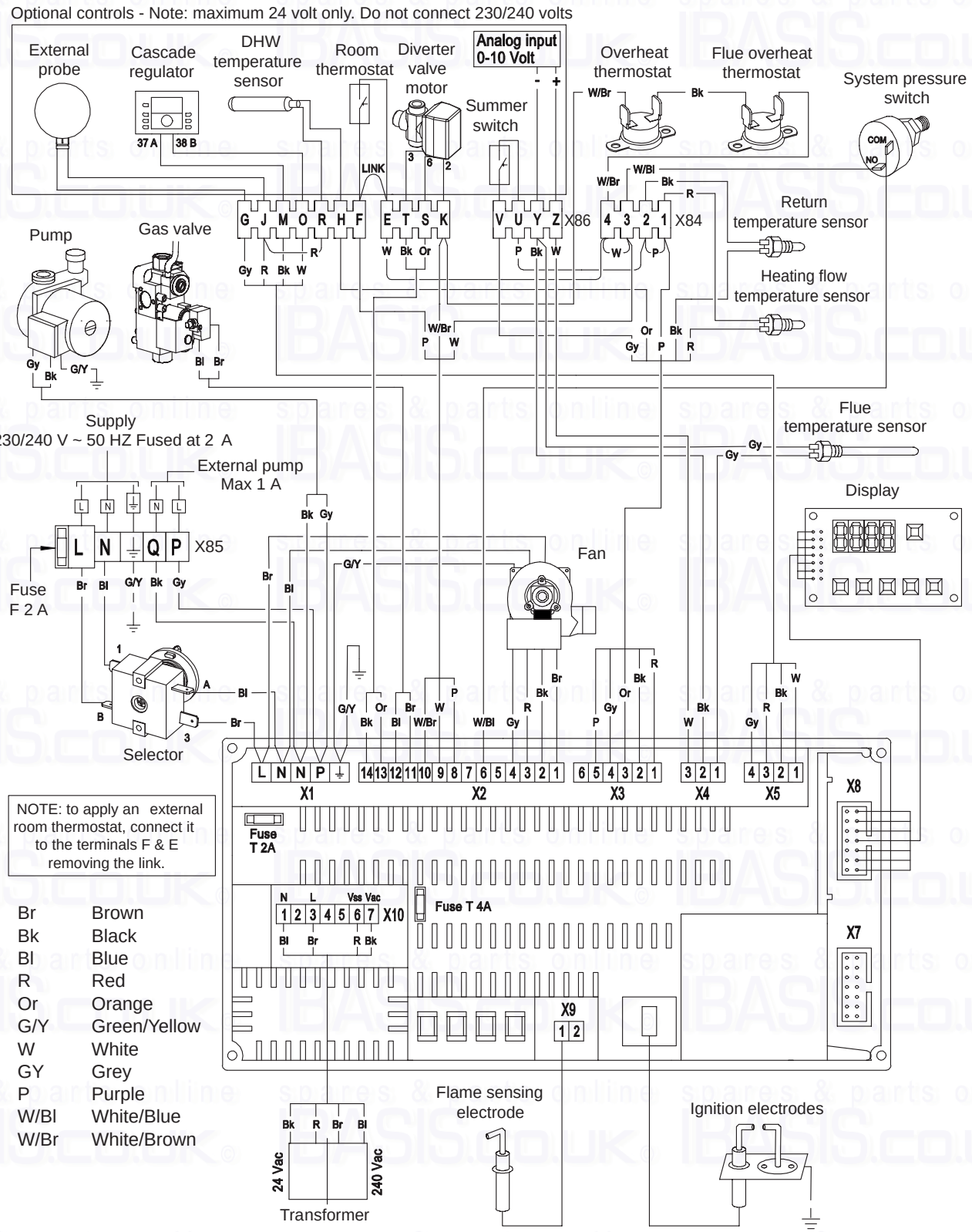


NOTE: to apply an external room thermostat, connect it to the terminals F & E removing the link.

| | |
|---|---|
| Br | Brown |
| Bk | Black |
| Bl | Blue |
| R | Red |
| Or | Orange |
| G/Y | Green/Yellow |
| W | White |
| GY | Grey |
| P | Purple |
| W/Bl | White/Blue |
| W/Br | White/Brown |

# 8 FAULT FINDING

Boiler error codes that may appear on the right hand side of the boiler display panel when a fault shuts down the boiler.
The code will be displayed with either the letter 'E' or 'b' on the left hand side.
'E' codes require a manual reset, 'b' codes will automatically reset.

| Code 'E' | | Solution |
|---|---|---|
| E 00 | | Check flame sensing electrode and wiring<br>Check PCB |
| E 02 | | Check gas supply<br>Check electrode position<br>Check flame sensing signal is greater than 6µA |
| E 03 | | Check gas supply |
| E05 E06 E11<br>E13 E14 E15<br>E16 E17 E44 E60 | | Check electrical connections<br>Check PCB |
| E 04 | | Check electrical connections |
| E 07 | | Check electrical connections |
| E 12 | | Check PCB fuses<br>Check primary flow thermostat<br>Check flue thermostat |
| E 18 | | Check water circulation<br>Check for air in the system |
| E 19 | | Check water circulation<br>Check for air in the system |
| E 24 | | Check water circulation<br>Check for air in the system |
| E 25 | | Check water circulation<br>Check for air in the system |
| E 26 | | Check for system leaks<br>Re-pressurise the system 0.75 - 1.25 bar |
| E 28 | | Check fan<br>Check fuse F3 |
| E 29 | | Check fan<br>Check fuse F3<br>Check electrical connections<br>Check PCB |
| E 30 | | Check water circulation<br>Check for air in the system |
| E 31 | | Check NTC resistance |
| E 32 | | Check NTC resistance |
| E 33 | | Check NTC resistance |
| E 36 | | Check NTC resistance |
| E 37 | | Check NTC resistance |
| E 38 | | Check NTC resistance |
| E 52 | | Check fan<br>Check flue<br>Check air inlet pipework<br>Check water circulation<br>Check for air in the system |
| E 65 | | Check fan<br>Check flue<br>Check air inlet pipework |
| E114 | | Check correct address setting on PCB |
| E118 | | Check gas supply<br>Check gas supply pressure<br>Check gas supply pipework |
| FUSE | | Change fuse |

**Table 7**

**Examples of boiler error codes**

E 02

This example of a manual reset fault means that the boiler has ignition failure. To eliminate the failure press the RESET button on the boiler control panel (see Fig. 24).

b 30

This example of an automatic reset fault means that the temperature difference between the system flow and return is more than 40°C. The boiler will automatically reset when the anomaly disappears.

| Code 'b' | Description | Solution |
|---|---|---|
| b 18 | System flow temperature over 92°C | Check the circulation of water in the system |
| b 19 | System return temperature over 87°C | Check the circulation of water in the system |
| b 24 | Inverted flow and return sensors | Check sensor position |
| b 25 | Increase of the system flow temperature too quick | Check the circulation of water in the system |
| b 26 | No water/insufficient water pressure | Check the system pressure is correct<br>Set the system pressure to between 1 and 1.2 bar<br>Check for any system leaks |
| b 28 | Fan breakdown (no Hall signal) | Check the fan<br>Check the fan fuse 'F3'<br>Check the PCB |
| b 29 | Fan fault | Check the fan<br>Check the fan fuse 'F3'<br>Check the PCB |
| b 30 | Temperature difference between system flow greater than 40°C | Check the circulation of water in the system |
| b 33 | DHW sensor anomaly (short circuit) | Check/replace DHW sensor |
| b 38 | DHW sensor anomaly (open) | Check/replace DHW sensor |
| b 65 | Fan start stand-by (insufficient air flow rate) | Check fan functioning |
| b118 | Ionisation current loss during burner ignition (after 3 attempts becomes 'E 02' error ignition failure) | Check presence of gas and electricity supply<br>Check the gas supply pressure |

**Table 8**

# 9 SHORT PARTS LIST

| Description | Qty. | Alpha Pt. No. |
|---|---|---|
| Main PCB | 1 | 1.025819 |
| Display PCB | 1 | 1.019405 |
| Control panel flap | 1 | 1.018884 |
| Control panel - CD90S | 1 | 1.029148 |
| Control panel - CD115S | 1 | 1.029197 |
| Pressure gauge | 1 | 1.015807 |
| Transformer | 1 | 1.025780 |
| Flame sensor | 1 | 1.028852 |
| Flame sensor lead | 1 | 3.019870 |
| Ignition electrode | 1 | 1.028702 |
| Combustion chamber cover - CD90S | 1 | 1.024139 |
| Combustion chamber cover - CD115S | 1 | 1.028675 |
| Burner - CD90S | 1 | 1.028343 |
| Burner - CD115S | 1 | 1.028277 |
| Injector Nat Gas - CD90S | 1 | 1.028828 |
| Injector Nat Gas - CD115S | 1 | 1.029229 |
| Injector LPG - CD90S | 1 | 1.028946 |
| Injector LPG - CD115S | 1 | 1.029230 |
| Fan | 1 | 1.028674 |
| Flexible air inlet pipe | 1 | 1.028689 |
| Primary Heat exchanger - CD90S | 1 | 1.026338 |
| Primary heat exchanger - CD115S | 1 | 1.028253 |
| Plastic flue manifold | 1 | 3.020422 |
| Primary NTC | 1 | 1.023435 |
| Pump | 1 | 1.028715 |
| Automatic air vent | 1 | 1.2295 |
| Primary pressure switch | 1 | 1.018320 |
| Gas valve | 1 | 1.028678 |
| Expansion relief valve | 1 | 1.018879 |
| Overheat thermostsat | 1 | 1.016870 |
| Flue NTC | 1 | 1.028832 |
| Pipe, pump to heat exchanger - CD90S | 1 | 1.028707 |
| Pipe, pump to heat exchanger - CD115S | 1 | 1.028692 |
| Pipe, heat exchanger to manifold - CD90S | 1 | 1.028706 |
| Pipe, heat exchanger to manifold - CD115S | 1 | 1.028691 |
| Pipe, gas valve to burner manifold - CD90S | 1 | 1.028688 |
| Pipe, gas valve to burner manifold - CD115S | 1 | 1.028681 |
| LH side panel | 1 | 2.014072 |
| RH side panel | 1 | 2.014071 |
| Tundish | 1 | 1.018870 |
| Pipe, tundish adapter | 1 | 1.011654 |
| Flue connection flange | 1 | 1.028682 |
| Condensate trap | 1 | 1.028679 |
| Condensate drain pipe | 1 | 1.028680 |
| Hydraulic seal kit | 1 | 3.021582 |
| Heat exchanger seal kit | 1 | 3.021583 |
| Gas circuit seal kit | 1 | 3.021580 |
| Flue manifold seal kit | 1 | 3.021581 |

# 10 benchmark CHECKLIST

***Ensure the following is completed after the boiler has been installed and commissioned:-***

***BOILER SERIAL No. ..... NOTIFICATION No. .....***

***CONTROLS** To comply with the Building Regulations, each section must have a tick in one or other of the boxes*

| | | | | |
|---|---|---|---|---|
| Time & temperature control to heating | room t/stat & programmer/timer | ☐ | Programmable roomstat | ☐ |
| Time & temperature control to hot water | cylinder t/stat & programmer/timer | ☐ | Combi boiler | ☐ |
| Heating zone valves | Fitted | ☐ | Not required | ☐ |
| Hot water zone valves | Fitted | ☐ | Not required | ☐ |
| Thermostatic radiator valves | Fitted | ☐ | | |
| Automatic by-pass to system | Fitted | ☐ | Not required | ☐ |

***FOR ALL BOILERS CONFIRM THE FOLLOWING:***

The system has been flushed in accordance with the boiler manufacturer's instructions? ☐ Yes ☐ No

The system cleaner used .....

The inhibitor used .....

***FOR CENTRAL HEATING MODE, MEASURE AND RECORD THE FOLLOWING:***

| | | |
|---|---|---|
| Gas rate | ☐ $m^3/hr$ | ☐ $ft^3/hr$ |
| Burner operating differential pressure (if applicable) | ☐ N/A | ☐ mbar |
| Central heating flow temperature | | ☐ °C |
| Central heating return temperature | | ☐ °C |

***FOR COMBINATION BOILERS ONLY***

Has a water scale reducer been fitted? ☐ Yes ☐ No

What type of scale reducer has been fitted? .....

***FOR DOMESTIC HOT WATER MODE, MEASURE AND RECORD THE FOLLOWING:***

| | | |
|---|---|---|
| Gas rate | ☐ $m^3/hr$ | ☐ $ft^3/hr$ |
| Maximum burner operating differential pressure (if applicable) | ☐ N/A | ☐ mbar |
| Cold water inlet temperature | | ☐ °C |
| Hot water outlet temperature | | ☐ °C |
| Water flow rate | | ☐ lts/min |

***FOR CONDENSING BOILERS ONLY CONFIRM THE FOLLOWING:***

The condensate drain has been installed in accordance with the manufacturer's instructions? ☐ Yes

***FOR ALL INSTALLATIONS CONFIRM THE FOLLOWING:***

The heating and hot water system complies with current Building Regulations ☐ Yes

The appliance and associated equipment has been installed and commissioned in accordance with the manufacturer's instructions ☐ Yes

If required by the manufacturer, have you recorded a $CO/CO_2$ ratio reading ☐ N/A ☐ Yes ☐ $CO/CO_2$ ratio

The operation of the appliance and system controls have been demonstrated to the customer ☐ Yes

The manufacturer's literature has been left with the customer ☐ Yes

***COMMISSIONING ENG'S NAME:***

Print ..... CORGI ID No. .....

Sign ..... Date .....

# 11 SERVICE RECORD

It is recommended that your heating system is serviced regularly and that you complete the appropriate Service Interval Record below.

**Service Provider:** Before cpmpleting the appropriate Service Interval Record below, please ensure you have carried out the service as described in this instruction manual. Always use the manufacturer's specified spare parts when replacing all controls.

**SERVICE 1:** Date .....
Engineers Name .....
Company Name .....
Telephone No. .....
Gas Safe ID card serial No. .....
Comments .....
.....
Signature .....

**SERVICE 2:** Date .....
Engineers Name .....
Company Name .....
Telephone No. .....
Gas Safe ID card serial No. .....
Comments .....
.....
Signature .....

**SERVICE 3:** Date .....
Engineers Name .....
Company Name .....
Telephone No. .....
Gas Safe ID card serial No. .....
Comments .....
.....
Signature .....

**SERVICE 4:** Date .....
Engineers Name .....
Company Name .....
Telephone No. .....
Gas Safe ID card serial No. .....
Comments .....
.....
Signature .....

**SERVICE 5:** Date .....
Engineers Name .....
Company Name .....
Telephone No. .....
Gas Safe ID card serial No. .....
Comments .....
.....
Signature .....

**SERVICE 6:** Date .....
Engineers Name .....
Company Name .....
Telephone No. .....
Gas Safe ID card serial No. .....
Comments .....
.....
Signature .....

**SERVICE 7:** Date .....
Engineers Name .....
Company Name .....
Telephone No. .....
Gas Safe ID card serial No. .....
Comments .....
.....
Signature .....

**SERVICE 8:** Date .....
Engineers Name .....
Company Name .....
Telephone No. .....
Gas Safe ID card serial No. .....
Comments .....
.....
Signature .....

**SERVICE 9:** Date .....
Engineers Name .....
Company Name .....
Telephone No. .....
Gas Safe ID card serial No. .....
Comments .....
.....
Signature .....

**SERVICE 10:** Date .....
Engineers Name .....
Company Name .....
Telephone No. .....
Gas Safe ID card serial No. .....
Comments .....
.....
Signature .....

Alpha
HEATING INNOVATION

Alpha Therm Limited.
Nepicar House, London Road, Wrotham Heath,
Sevenoaks, Kent TN15 7RS
Tel: 0844 8718764

email: info@alpha-innovation.co.uk
website:www.alpha-innovation.co.uk

*These instructions have been carefully prepared but we reserve the right to alter the specification at any time in the interest of product improvement.*
*© Alpha Therm Limited 2010.*

Manual compiled and designed by Publications 2000 - Tel: (01670) 356211 03/10/D243