Installation and Servicing Instructions

Alpha HE25 and HE33

Wall Mounted, Fan Assisted, Room Sealed, Gas Fired, High Efficiency Condensing Boiler Range

For Technical help or for Service call ...
ALPHA HELPLINE
Tel: 0870 3001964

Alpha
HEATING INNOVATION

Nepicar House, London Road,
Wrotham Heath, Sevenoaks,
Kent TN15 7RS

British Gas
Service Listed

CE

Alpha HE25	G.C. No. 47 532 41
Alpha HE33	G.C. No. 47 532 43

WRAS APPROVED PRODUCT

benchmark™

For use with Natural Gas only

Leave these instructions with the User

spares & parts online IBASIS.CO.UK

CONTENTS

1 Introduction 2
2 Technical data 3
3 General boiler information 6
4 Installation 12
5 Commissioning 18
6 Boiler operation 23
7 Routine servicing 22
8 Component replacement 26
9 Wiring diagrams 31
10 Fault finding 33
11 Short parts list 38
12 Benchmark Checklist 39
13 Service record 40

1 INTRODUCTION

The Alpha HE range of high efficiency condensing boilers are wall mounted, fan assisted room-sealed boilers. The burner is lit electronically and the heat output is controlled by a modulating gas valve.

The HE25 and HE33 are combination boilers providing both central heating and domestic hot water at mains pressure.

The boilers are supplied with a pump, pressure relief valve, expansion vessel and pressure gauge fully assembled and tested. They are designed for use with a fully pumped, sealed and pressurised central heating system using only Natural gas.

The HE25 boiler is suitable for central heating loads of between 14.5 and 25.0 kW (49 500 and 85 300 Btu/h).

The HE33 boiler is suitable for central heating loads of between 19.7 and 33.2 kW (67 200 and 113 300 Btu/h).

The maximum output available for domestic hot water is 25.0 kW (85 300 Btu/h), capable of providing 9.9 litres/min with a temperature rise of 35°C for the Alpha HE25 boiler and for the Alpha HE33 boiler - 33.2 kW (113 300 Btu/h), providing 13.2 litres/min with a temperature rise of 35°C.

IMPORTANT

It is the law that all gas appliances are installed by a competent person, i.e. CORGI registered personnel, in accordance with the following recommendations:-

Current Gas Safety (Installation and Use) Regulations

All current Building Regulations issued by the Department of the Environment, i.e. Approved Document L1.

Building Standards (Scotland) (Consolidation) Regulations issued by the Scottish Development Department

UK Water Regulations/Byelaws (Scotland)

Health & Safety Document No. 635 (The Electricity At Work Regulations 1989)

The installation should also be in accordance with the following British Standard Codes of Practice:-

BS 5440:1:2000	Flues
BS 5449:1990	Forced circulation hot water systems
BS 5546:2000	Installation of hot water supplies for domestic purposes
BS 6700:1997	Design, installation, testing and maintenance of services supplying water
BS 6798:2000	Installation of gas fired hot water boilers
BS 6891:1998	Gas installation and IGE/UP/1B
BS 7593:1992	Code of Practice for treatment of water in heating systems
BS 7671:2001	Requirements for electrical installations, IEE Wiring Regulations

Reference should also be made to the DEFRA document 'Guide to condensing boiler installation assessment procedure for dwellings'

If installation is in a timber framed building, refer to the Institute of Gas Engineers document IGE/UP/7.

This appliance meets the requirements of IPX4D, i.e. degree of protection against moisture.

Failure to install this appliance correctly could lead to prosecution. It is in your own interest and that of safety to ensure that the law is complied with.

Manufacturer's instructions must **NOT** be taken in anyway as over-riding statutory obligations.

Notes:
1. Ensure that the Benchmark Checklist has been completed after the boiler has been installed and commissioned.
2. The boilers **MUST** only be used with Alpha CD condensing flue components.

2 TECHNICAL DATA

2.1 PERFORMANCE - NATURAL GAS *(CAT: 12H 2H - G20 - 20 mbar)*

Alpha HE25

Central Heating			MAX.	MIN.
Heat Input		kW	27.4	16.3
(Gross)		Btu/h	93 400	55 600
Heat Output (condensing)		kW	25.0	14.5
(50°C/30°C)		Btu/h	85 300	49 500
Heat Output (non-condensing)		kW	24.0	14.0
(80°C/60°C)		Btu/h	81 900	47 800
Burner	Room sealed chamber panel fitted	mbar	12.3	4.3
Pressure		in wg	4.92	1.72
Gas Rate		m³/h	2.61	1.55
		ft³/h	92.1	54.7

Alpha HE25

Domestic Hot Water			MAX.	MIN.
Heat Input		kW	27.4	11.4
(Gross)		Btu/h	93 400	38 900
Output to Water		kW	25.0	9.9
(modulating)		Btu/h	85 300	33 800
Burner	Room sealed chamber panel fitted	mbar	12.3	1.9
Pressure		in wg	4.92	0.76
Gas Rate		m³/h	2.61	1.09
		ft³/h	92.1	38.5
Flow Rate at 35°C Rise		L/min	9.9	
		gal/min	2.2	

Alpha HE33

Central Heating			MAX.	MIN.
Heat Input		kW	36.6	22.4
(Gross)		Btu/h	124 800	76 400
Heat Output (condensing)		kW	33.2	19.7
(50°C/30°C)		Btu/h	113 300	67 200
Heat Output (non-condensing)		kW	32.0	19.2
(80°C/60°C)		Btu/h	109 200	65 500
Burner	Room sealed chamber panel fitted	mbar	11.6	3.6
Pressure		in wg	4.64	1.44
Gas Rate		m³/h	3.49	2.14
		ft³/h	123.2	75.5

Alpha HE33

Domestic Hot Water			MAX.	MIN.
Heat Input		kW	36.6	15.2
(Gross)		Btu/h	124 800	51 800
Output to Water		kW	33.2	13.2
(modulating)		Btu/h	113 300	45 000
Burner	Room sealed chamber panel fitted	mbar	11.6	1.2
Pressure		in wg	4.64	0.48
Gas Rate		m³/h	3.49	1.46
		ft³/h	123.2	51.5
Flow Rate at 35°C Rise		L/min	13.2	
		gal/min	2.9	

2.2 SYSTEM

Alpha HE25 and HE33

Central Heating (Sealed System)	
Max. Working System Pressure	2.5 bar
Min. System Pressure	0.5 bar
Max. System Temperature	82°C
Pressure Relief Valve Setting	3 bar (44 PSI)
Expansion Vessel Size (pre-charge press.)	8 L at 1.0 bar
Flow Connection	22 mm
Return Connection	22 mm
Relief Valve Connection	15 mm
Recommended System Pressure (cold)	1.0 bar
CH Water Temp. (Approx. max.)	82°C (180°F)

Alpha HE25 and HE33

Domestic Hot Water		
Max. Mains Inlet Water Pressure		8 bar
Min. Mains Water Pressure		0.2 bar
Min. DHW Flow Rate		2.5 l/min
Mains Inlet Connection		15 mm
DHW Outlet Connection		15 mm
DHW Water Content	HE25	0.30 L
	HE33	0.35 L
Outlet Water Temp. (Approx. max.)		62°C (144°F)

2.3 AVAILABLE PUMP HEAD FOR CENTRAL HEATING

Alpha HE25

Output (50/30°C)		Available pump head		Flow rate	
kW	Btu/h	metres	feet	litre/min	gal/min
25.0	85 300	1.8	6.0	16.7	3.7
22.0	75 000	2.1	7.0	15.0	3.3
20.0	68 200	2.4	8.0	13.3	2.9
14.5	49 500	2.9	9.6	10.0	2.2

Alpha HE33

Output (50/30°C)		Available pump head		Flow rate	
kW	Btu/h	metres	feet	litre/min	gal/min
30.0	102 300	1.5	5.0	20.0	4.4
25.0	85 300	2.1	7.0	16.7	3.7
22.0	75 000	2.3	7.6	15.0	3.3
20.0	68 200	2.6	8.6	13.3	2.9

This information is based on 20°C system design temperature difference. Refer to Section 3.7, System Volume.

2.4 COMPONENTS

Burner		Stainless steel
Main Heat Exchanger		Copper
Condensing Heat Exchanger		Aluminiun
DHW Heat Exchanger		Stainless Steel
Main Burner Injector	HE25	1.30 mm x 11
	HEB33	1.30 mm x 15
Flue Outer Duct - Condensing		White
Flue Inner Duct - Condensing		Plastic

2.5 ELECTRICAL

Supply		230/240 V ~ 50 Hz
External Fuse		3 A
Power Consumption	HE25	150 W
	HE33	170 W
Internal Fuse		F2 A
Electrode Spark Gap		2 - 4 mm

2.6 INSTALLATION

Min. Clearances for Servicing (from casing)	Top	235 mm
	Bottom	250 mm
	Sides	5 mm
	Front	450 mm
Flue Terminal Size		100 mm Dia.
Flue Terminal Protruding		100 mm
Hole Size Required For Flue Assy.		110 mm Dia.
Lift Weight	HE25	45 kg
	HE33	47 kg

2.7 GENERAL

Case Dimensions	Height	845 mm
	Width	450 mm
	Depth	345 mm
Gas Connection		22 mm
Primary Water Content	HE25	2.10 L
	HE33	2.15 L
Air Duct Diameter		100 mm
Flue Duct Diameter		60 mm

2.8 FLUE LENGTHS

CD Easy-Flue 500 mm with terminal and 90° bend. A CD Easy-Flue 1000 mm with terminal and 90° bend is also available.
CD 750 mm and CD 1000 mm flue extensions are available.
Length of Flue Required:-

Rear Flue = wall thickness + 170 mm (includes terminal)
Side Flue = wall thickness + distance between wall and side of boiler + 230 mm (includes terminal)
Vertical Flue = distance from top of boiler side panel to required roof position minus 1 m for vertical terminal assembly

Maximum horizontal flue length = 3 m.
Maximum vertical flue length including terminal is 6 m.
Each additional CD 90° Bend is equivalent to 1.3 m of flue length.
Each CD 45° Bend is equivalent to 0.9 m of flue length.
The CD Vertical Flue terminal assembly is equivalent to 1 m of flue length.

2.9 ELECTRICAL CONNECTIONS

Note: This Appliance Must Be Earthed
An optional integral single channel Clock kit is available if required.
Note: Only use the Alpha single channel clock. **Do not fit any two channel clocks.**

Not Used	Red Wire	Red Wire	Brown Wire	Blue Wire
5	4	3	2	1

Internal Clock Terminals

WARNING
1. Ensure wires are connected correctly
2. Only fit the Alpha recommended single channel clock. Other clocks could cause damage.

Clock connections

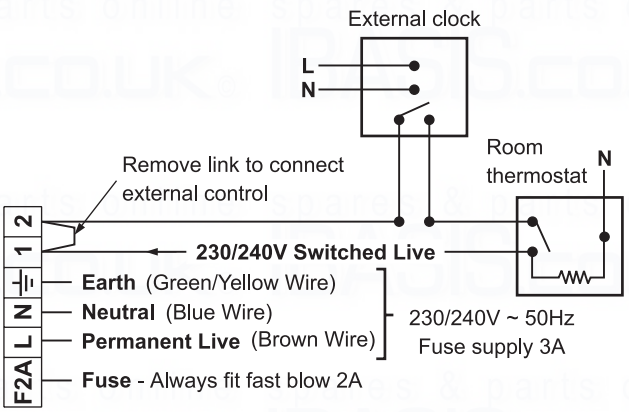

Boiler terminal block

Fig. 1

2.10 BOILER SCHEMATIC

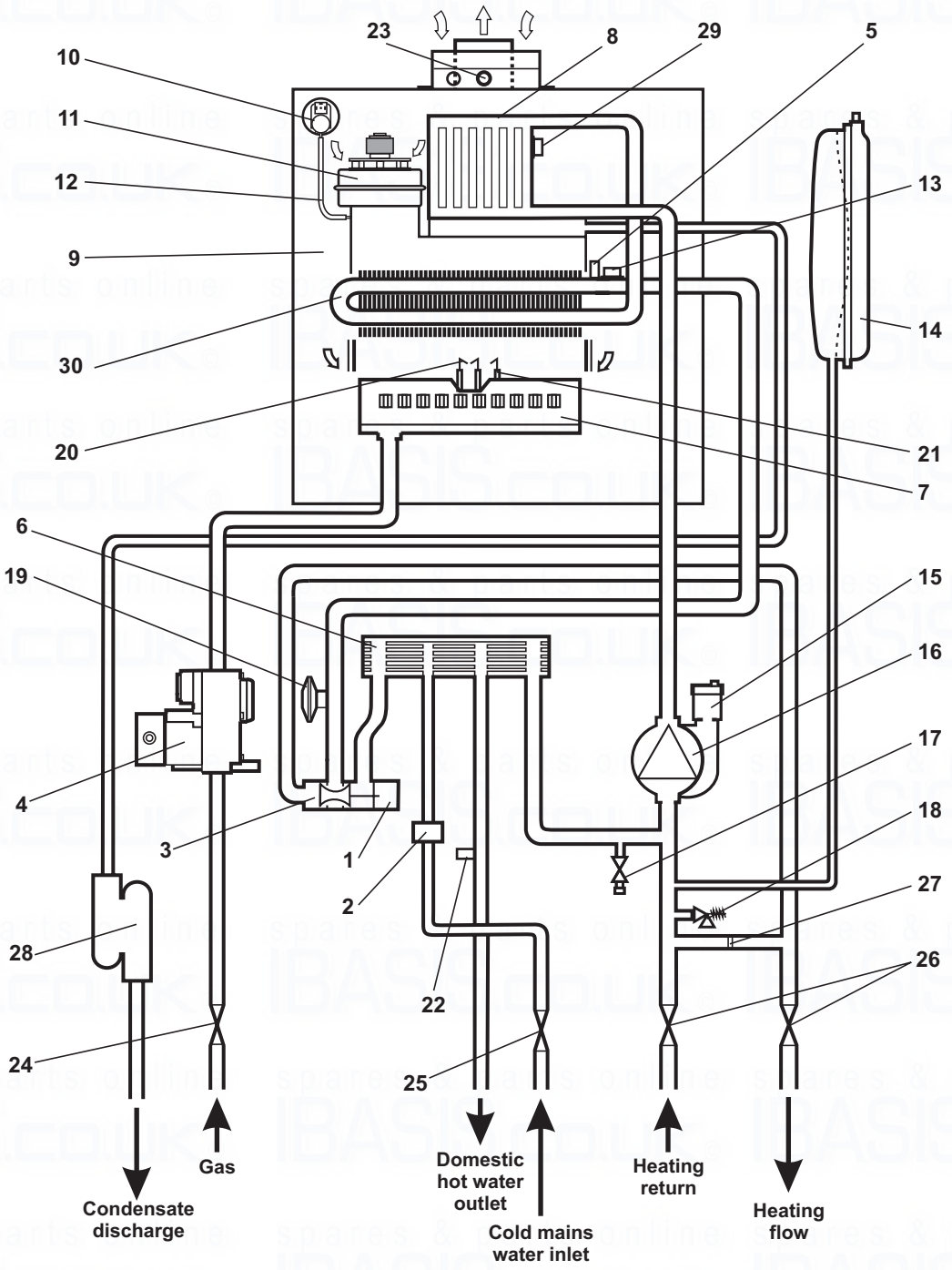

1	-	Diverter valve motor	11	-	Fan	21	-	Flame sensing electrode
2	-	DHW flow switch and filter	12	-	Pressure tube	22	-	DHW temperature sensor
3	-	Diverter valve	13	-	Overheat thermostat	23	-	Flue sampling point
4	-	Gas valve	14	-	Expansion vessel	24	-	Gas service cock
5	-	Primary temperature sensor	15	-	Automatic air vent	25	-	Mains inlet on/off valve
6	-	DHW heat exchanger	16	-	Pump	26	-	Isolating valve
7	-	Main burner	17	-	Drain point	27	-	Automatic by-pass
8	-	Condensing heat exchanger	18	-	Pressure relief valve	28	-	Condensate trap
9	-	Room sealed chamber	19	-	Primary pressure switch	29	-	Flue limit thermostat
10	-	Air pressure switch	20	-	Ignition electrodes	30	-	Main heat exchanger

Fig. 2

3 GENERAL BOILER INFORMATION

3.1 GAS SUPPLY

The Alpha HE25 boiler requires a gas rate of 2.61 m³/h (92.1 ft³/h).

The Alpha HE33 boiler requires a gas rate of 3.49 m³/h (123.2 ft³/h).

The meter and supply pipes must be capable of delivering this quantity of gas in addition to the demand from any other appliances in the house. The boiler requires at least a 22 mm gas supply pipe.

The complete installation, including the meter, must be tested for gas tightness and purged as described in BS 6891.

3.2 ELECTRICAL SUPPLY

The boiler requires a 230/240 V ~ 50 Hz mains supply, fused at 3 A

The boiler must be earthed.

There must only be one common isolator, providing complete electrical isolation, for the boiler and any external controls.

This boiler has been fitted with a supply cable, however, if it is necessary to fit a cable use PVC insulated cable not less than 0.75 mm² (24 x 0.2 mm) to BS 6500 Table 16. The boiler should be connected to a fused three pin plug and unswitched shuttered socket outlet (both complying with BS 1363), or a fused double pole switch with a contact separation of at least 3 mm in both poles.

Wiring external to the boiler must be in accordance with the current IEE Wiring Regulations (BS 7671).

Note: If a room thermostat is fitted, it must be suitable for 230/240 V switching.

3.3 AIR SUPPLY

The boiler does not require any air vents for cooling in the room in which it is installed or when installed in a cupboard or compartment. The minimum clearances for servicing must always be maintained.

Note: A cupboard or compartment used to enclose the boiler must be designed and constructed specifically for the purpose, i.e. comply with the Building Regulations.

3.4 FLUE SYSTEM - Fig. 3

The flue system must be installed in accordance with BS 5440:1.

For horizontal flues ensure the flue assembly is horizontal and the inner duct is sloping downwards towards the boiler.

Flue components are available as follows:-

CD Easy-Flue 500 mm (includes 90° bend and terminal) - Part No. 6.2000510.
CD Easy-Flue 1000 mm (includes 90° bend and terminal) - Part No. 6.2001010.
CD 1 m flue extension - Part No. 6.20001050.
CD 0.75 m flue extension - Part No. 6.2000750.
CD 90° bend - Part No. 6.2000590.
CD 45° bend - Part No. 6.2000545.
CD Vertical flue terminal assembly. Refer to the separate installation instructions supplied with the assembly.

The following methods determine the correct length of flue required.

For rear exit flue (including terminal) L = B + 170 mm

For side exit flue (including terminal) L = B + C + 230 mm (min. side clearance required is 5 mm)

For vertical flue L = H minus 1000 mm for vertical terminal assembly

Where L = Required flue length
B = Finished wall thickness
C = Distance from the inside wall to the side of the boiler
H = Distance from top of boiler side panel to roof position

Note:
1. If an extra 90° bend is used, this reduces the maximum flue length by 1.3 m. Each 45° bend used reduces the maximum flue length by 0.9 m.
2. Under no circumstances must the flue length (including allowances for extra bends) exceed 3 metres horizontally and only 6 metres vertically.
3. If the flue is more than 0.5 m, the restrictor must be removed from the boiler flue adaptor (see Fig. 19,
4. Failure to use Alpha CD flue components with the boiler will invalidate the boilers CE approval, guarantee and may be unsafe.

HORIZONTAL FLUE OPTIONS - Lmax = 3 metres

L = B + C + 230 mm

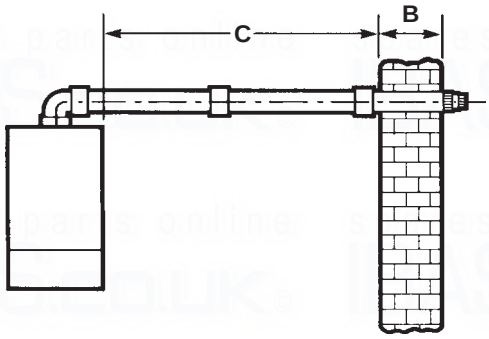

L = B + C + E + 230 mm

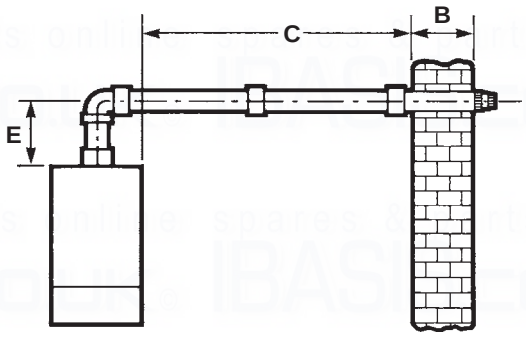

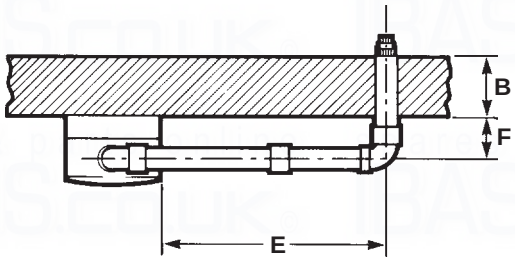

L = B + E + F + 230 mm + (90° bend = 1.3 metre)

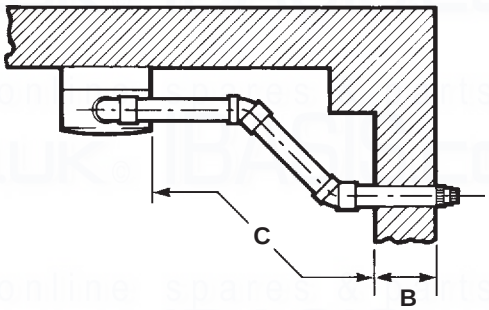

L = B + C + 230 mm + (2 x 45° bends = 1.8 metre)

VERTICAL FLUE OPTIONS

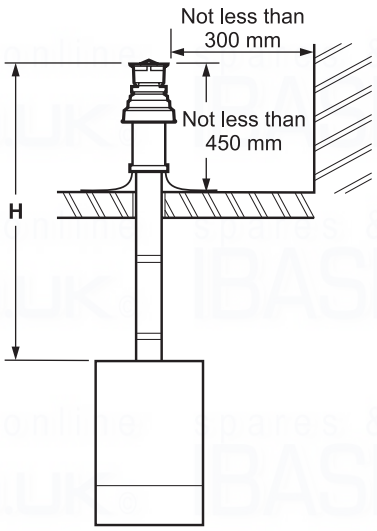

Hmax = 6 m

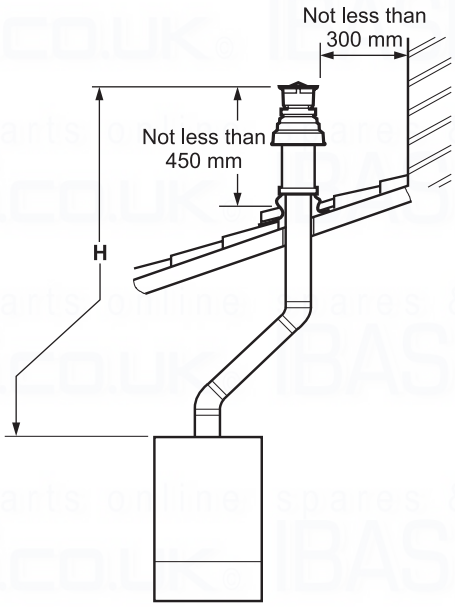

Hmax = 4.2 m

Fig. 3

3.5 FLUE TERMINAL LOCATION - Fig. 4

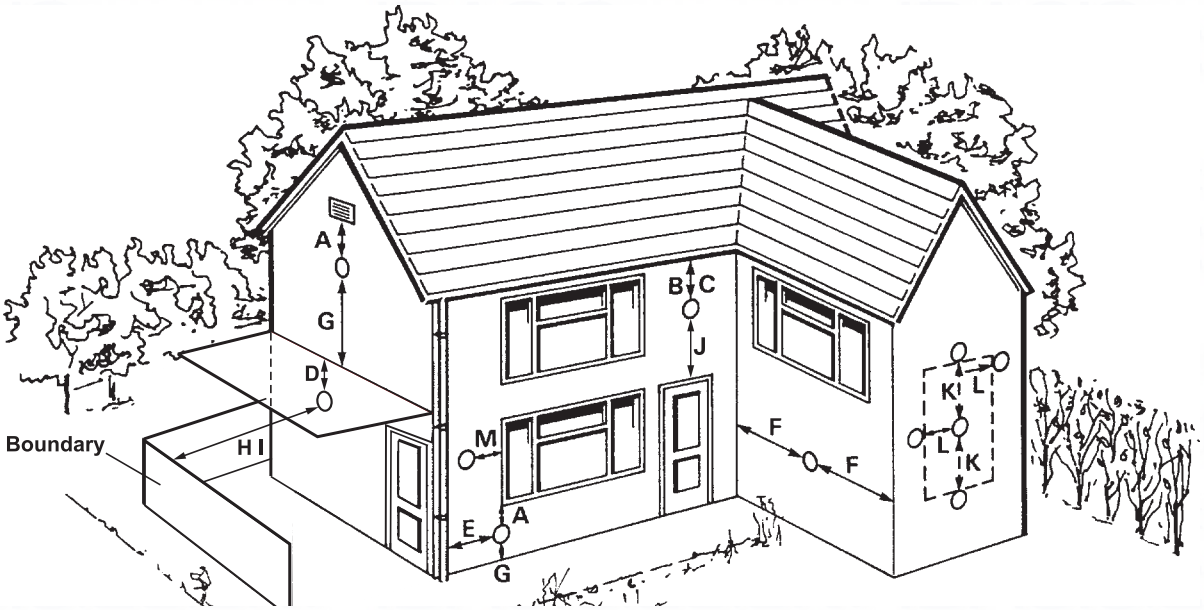

Fig. 4

	Terminal position	Min. distance (mm)
A	Directly below an opening, air brick, windows, etc.	300 (See Note 1)
B	Below gutters, soil pipes or drain pipes	75 (See Note 3)
C	Below eaves	200 (See Note 3)
D	Below balconies	200 (See Note 3)
E	From a vertical drain pipe or soil pipe	150 (See Note 3)
F	From an internal or external corner	300 (See Note 2)
G	Above ground, roof or balcony level	300
H	From a surface facing the terminal	600 (See Note 4)
I	From a terminal facing the terminal	1200 mm
J	Above an opening, air brick, window etc.	300 (See Note 1)
K	Vertically from a terminal on the same wall	1500 mm
L	Horizontally from a terminal on the same wall	300 mm
M	Horizontally from an opening, air brick, window etc.	300 mm (See Note 1)

Notes:
1. In addition, the terminal should not be nearer than 150 mm to the framework of an opening into the buiding, i.e. a window surround or door surround.
2. This clearance may be reduced to 25 mm without effecting the performance of the boiler. However, to ensure the condensate plume does not affect adjacent surfaces a clearance of 300 mm is preferable.
3. These clearances may be reduced to 25 mm without effecting the performance of the boiler. However, to ensure the condensate plume does not affect adjacent surfaces the terminal should be extended beyond gutters, pipes, eaves, balconies etc.
4. To reduce the possibility of nuisance to neighbouring buildings etc. it is recommended the terminal shouild not be less than 2500 mm from car parking spaces, building boundary walls, fences etc.

Note: A terminal must not be sited under a car port roof

Note: In certain weather conditions the terminal will emit a plume of steam. If possible avoid positioning the terminal where this may cause a nuisance, i.e. positions A, D, G, H, J or M.

The flue terminal must be exposed to the external air and the position must allow the free passage of air across it at all times.

If the terminal is fitted within 850 mm of a plastic or painted gutter or 450 mm of painted eaves, an aluminium shield at least 1 m long should be fitted to the underside of the gutter or painted surface. A terminal must not be sited below 2.1 m where people have access to, such as public footpaths, access routes, patios etc. However, If the terminal is fitted less than 2.1 m above a surface where there is no public access, the terminal must be protected by a terminal guard.
A suitable guard is available from Alpha Therm Ltd.

3.6 BOILER LOCATION

The boiler is not suitable for external installation, unless it is installed within a purpose designed weatherproof building.

The boiler must be installed on a flat vertical wall which is capable of supporting the weight of the boiler. The boiler can be fitted to or adjacent to a wall comprising of a combustible material without the need for a special thermal insulation barrier.

If the boiler is to be fitted in a timber framed building, it should be fitted in accordance with the Institute of Gas Engineers 'Guide for Gas Installations in Timber Frame Housing', reference IGE/UP/7.

The boiler may be installed in any room or internal space, although particular attention is drawn to the requirements of the current IEE Wiring (BS7671) Regulations, and in Scotland, the electrical provisions of the Building Regulations applicable in Scotland, with respect to the installation of the boiler in a room or internal space containing a bath or shower. Where a room-sealed boiler is installed in a room containing a bath or shower, it must not be possible for a person using the bath or shower to touch any electrical switch or boiler control utilising mains electricity.

The boiler may be installed in a cupboard or compartment, provided it is correctly designed for that purpose, i.e. complies with the Building Regulations and the requirements of BS 6798.

3.7 CENTRAL HEATING SYSTEM - Fig. 5

The boiler is designed for use in a sealed central heating system in accordance with the requirements of BS 5449 and BS 6798. The system should be designed to operate with flow temperatures of up to 82°C. When designing the system, the pump head, expansion vessel size, mean radiator temperature, etc. must all be taken into account. Refer to the pump performance table for guidelines.

System volume - The expansion vessel incorporated into the boiler is suitable for a sealed heating system with a maximum water content of 80 litres (18 gal). For guidance on water contents contact Alpha Therm Ltd. for Technical Data Sheet 15. Above 80 litres, consideration should be given to fitting an additional expansion vessel fitted in the position shown in Fig. 5. To check correct operation of the expansion vessel(s) the system pressure should not be more than 2.5 bar when the system is at maximum operating temperature (for further guidance refer to BS 7074:1).

The boiler is supplied with the following components built in:-

Pressure relief valve - complying with BS 6759 and set to operate at 3 bar. The discharge pipe must be routed clear of the boiler and terminated in such a manner that it can be seen, but cannot cause injury to persons or property.

Pressure gauge - To indicate the system pressure to be maintained.

Expansion vessel - Conforming to BS 4814 with a capacity of 8 litres and pre-charged to a pressure of 1.0 bar.

By-pass - The boiler incorporates a by-pass, however where all radiators are fitted with thermostatic radiator valves it is recommended a system by-pass, preferably automatic is fitted.

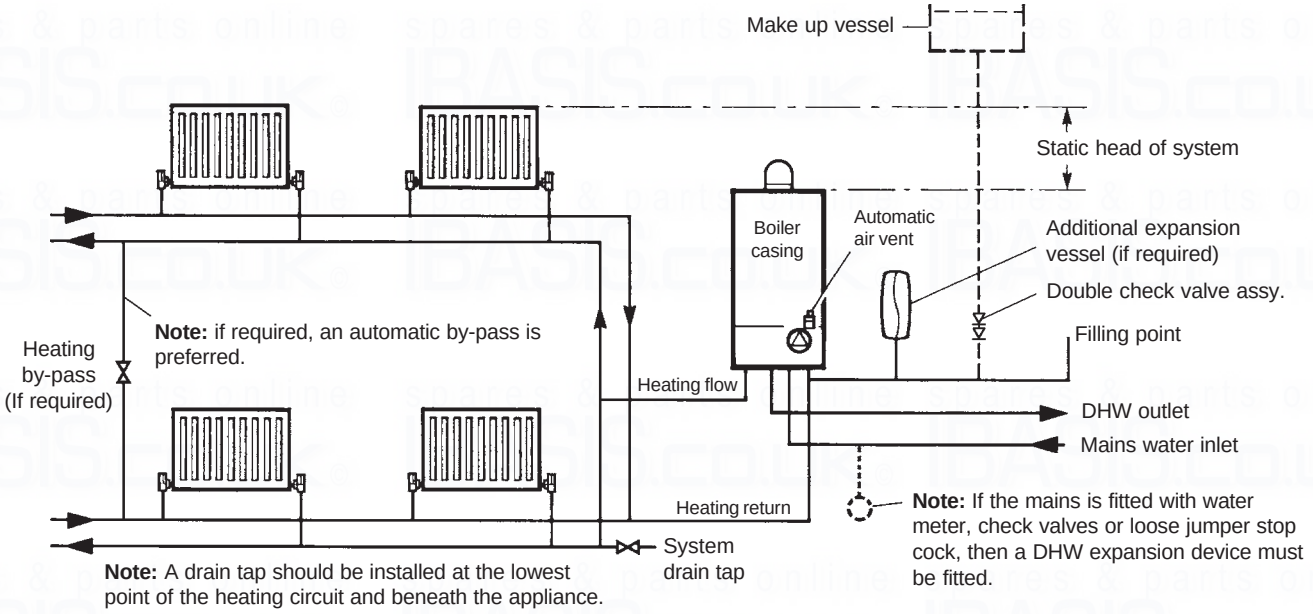

Fig. 5

3.8 FILLING THE CENTRAL HEATING SYSTEM - Figs. 6, 7

The system design pressure (cold) should be set to 1.0 bar. This pressure is equivalent to a static head (see Fig. 5) of 10.2 metres of water. Provision should be made to replace water lost from the system. This can be by manual or automatic means, as shown in Figs. 6 and 7. The position for connecting an automatic make-up vessel is indicated in Fig. 5. A double check valve assembly must be used, as shown in Fig. 7.

Filling of the system must be carried out in a manner approved by the local Water Undertaking. Where allowed, the system may be filled via a temporary connection as shown in Fig. 6. After filling, always disconnect the flexible hose of the filling loop.

All fittings used in the system must be able to withstand pressures up to 3 bar.

Drain taps (to BS 2879) must be used to allow the system to be completely drained.

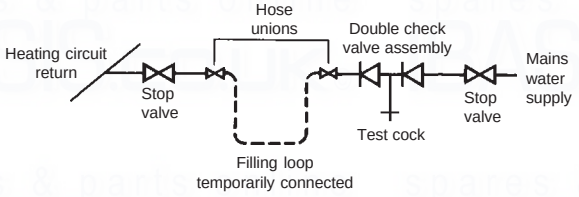

Fig. 6

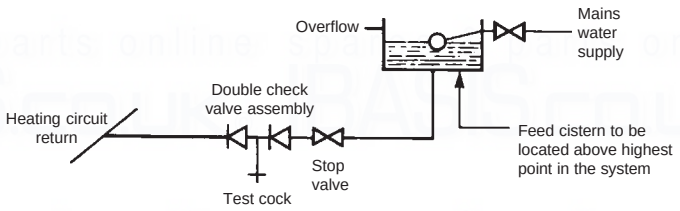

Fig. 7

3.9 FLUSHING THE HEATING SYSTEM

It is essential that the central heating system is thoroughly cleaned and flushed when fitting an Alpha HE boiler, the recommended inhibitor must also be used. Failure to do so will invalidate the warranty.

The inhibitor must be applied in accordance with its manufacturers instructions. Only products from Fernox and Sentinel are acceptable for use with the Alpha HE boilers. Further information can be obtained from Fernox (Tel: 0179 9521133) or Sentinel (Tel: 0151 4209563).

The heating system should be thoroughly flushed in accordance with BS 7593 and BS 5449. The following procedures are recommended:

1. Installing onto a new system:-
   a. Fill the system, vent at high points, at pump and radiators.
   b. Check for leaks.
   c. Rapidly drain the system.
   d. If required, chemically clean the system as instructed by the recommended cleaner manufacturer.
      Note: Ensure that the system is flushed to remove any remains of the cleaner.
   e. If chemical cleaner is not used to clean the system:-
      i) Refill the system.
      ii) Switch on the boiler and allow the system to heat up to the normal operating temperature.
      iii) Rapidly drain the system while the water is still hot.
      iv) Refill the system.
   f. Add the recommended inhibitor to the system as instructed by the inhibitor manufacturer.
   g. Recheck for leaks.
2. Installing onto an existing system, clean the system before fitting the new boiler:-
   a. If the old boiler is still working:-
      i) Switch on the boiler and allow the system to heat up to the normal operating temperature.
      ii) Rapidly drain the system while the water is still hot.
      iii) Refill and chemically clean the system as instructed by the recommended cleaner manufacturer.
      iv) Ensure the system is flushed to remove any remains of the cleaner.
      v) Fit the new boiler.
   b. If the old boiler is not working:-
      i) Rapidly drain the system.
      ii) Remove the old boiler.
      iii) Flush the system through.
      iv) Fit the new boiler.
      v) Refill and chemically clean the system as instructed by the recommended cleaner manufacturer.
      vi) Ensure the system is flushed to remove any remains of the cleaner.
   c. Add the recommended inhibitor to the system as instructed by the inhibitor manufacturer.
   d. Check for leaks.

3.10 DISPOSAL OF CONDENSATE

Provision must be made for the safe disposal of condensate produced by the flue gases of the Alpha HE boilers, and reference should be made to BS 6798:2000 for the requirements on the disposal of condensate.

The boilers incorporate a condensate trap which has a seal of 75 mm, therefore no additional trap is required.

The condensate should ideally be discharged internally into an internal waste pipe (washing machine/sink waste) or soil pipe to avoid the possible risk of freezing. The pipework must be in 22 mm pipe.

External pipe runs should be avoided, but if it is necessary, the pipework should be at least 32 mm and protected from the risk of freezing with a waterproof insulation and the length should be kept to a maximum of 3 m. Termination should be into an external gulley or soakaway as shown in Figs. 8 and 9.

Note: All pipework must have a continuous fall (see Figs. 8 and 9) from the boiler and must be of an acid resistant material such as plastic waste pipe. (copper or steel is not suitable).

It should be noted that the connection of a condensate pipe to a drain may be subject to local building control requirements.

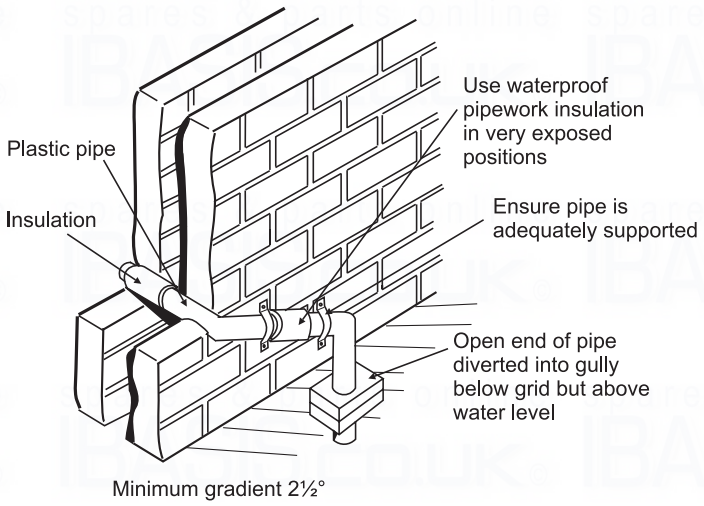

Fig. 8 - External gully

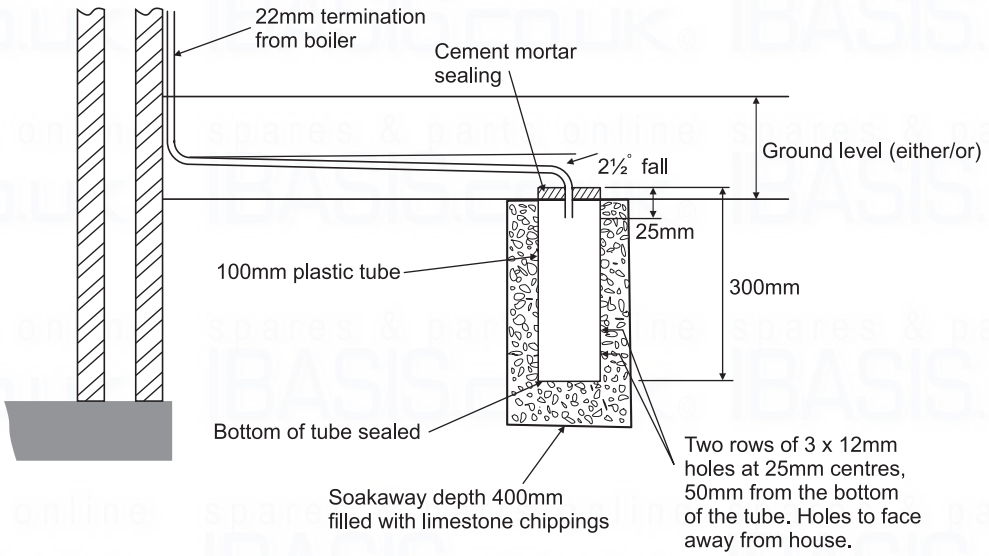

Fig. 9 - External soakaway

3.11 DOMESTIC HOT WATER SYSTEM

The minimum flow rate needed for the flow switch and burner to operate is 2.5 litres/min.

The incoming mains water pressure should be between 0.2 and 8 bar to ensure efficient operation. If the pressure is above 7 bar a pressure reducing valve must be fitted.

To ensure economic use, the pipe runs between the boiler and taps should be in 15 mm copper pipe and be as short as possible. Where possible the pipework should be insulated to reduce heat loss.

All taps and mixing valves used with the hot water system must be suitable for operating at a mains pressure of up to 8 bar.

Showers - A shower may be used with the boiler if required.
If a loose or flexible head type shower is used it may require the fitting of a double check valve, to comply with Water Bye Law 17.

Bidets - No anti-syphonage arrangements are necessary, provided the outlets are shrouded and it is not possible to attach a temporary hand held spray. A supply of direct mains fed hot and cold water is permitted provided the appliance is of the over-rim flushing type.

Before the mains water supply pipe is connected to the boiler, it should be thoroughly flushed out to avoid the danger of dirt or foreign matter entering the boiler.

4 INSTALLATION

4.1 UNPACKING

1. The boxes required when the boiler is installed with a horizontal flue are as follows:-

   Box 1 Cased boiler fitted with water and gas valves, filling loop, union bends and washers
   Mounting bracket plus screws and wall plugs
   Literature pack and Wall template

   Box 2 CD Easy-Flue 500 mm or CD Easy-Flue 1000 mm. Both include 90° bend and horizontal flue terminal
   Note: NOT required for vertical flue

   Notes: a. All flues must be suitable for CD condensing boilers.
   b. CD 750 mm and 1000 mm flue extensions are available, if required.

2. Unpack boiler and remove the loose items packs and mounting bracket.

   Note: The boiler can be stood in an upright position, (to allow this, the union bends have been turned upwards so that they do not protrude beneath the bottom - check this before standing the boiler upright).

4.2 CLEARANCES REQUIRED - Fig. 10

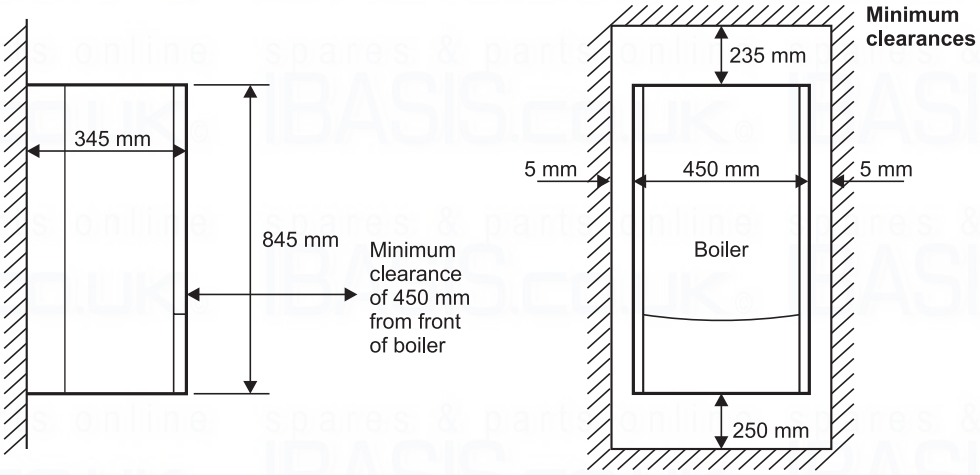

Fig. 10

4.3 PREPARE THE WALL - Figs. 11, 12

1. Decide upon the position of the boiler taking into account the clearances required for servicing and the flue terminal position.
2. Tape the template to the wall (ensure it is level and the right way up) and mark the position of the holes for the boiler mounting bracket and bottom fixings. If rear exit flue is used, mark the position of the hole for the flue.
3. **Side exit flue -** Continue the horizontal centre line of the flue across the wall to the side wall, then along the side wall 165 mm (ensure the lines are horizontal). This will give the position of the centre of the hole for the flue.
4. Cut the 110 mm diameter hole (or use a 107 mm core drill) in the wall for the flue.
   Notes: a. Ensure the hole is horizontal.
   b. For internal fitting of the flue, using the flue sealing collar supplied, cut a 130 mm dia. flue hole using a 127 mm core drill.
5. Drill the fixing holes (10 mm dia.) to accept the No.10 plugs supplied. Using the screws supplied, fit the mounting bracket.

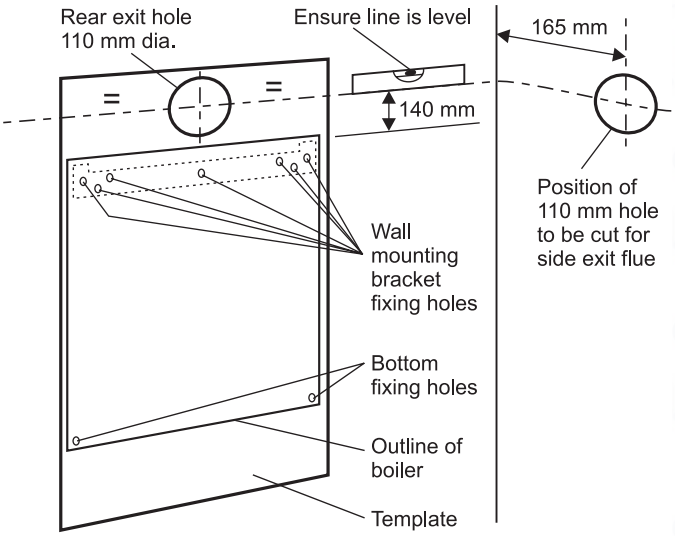

Fig. 11

6. **Top pipe connections -** Preform the pipework at the back of the boiler before hanging the boiler, see Fig. 12, and secure in the clips provided.

4.4 FIT THE BOILER - Refer to Fig. 11

1. Lift the boiler and locate it on the mounting bracket. Fit the bottom screws to secure the boiler in position.

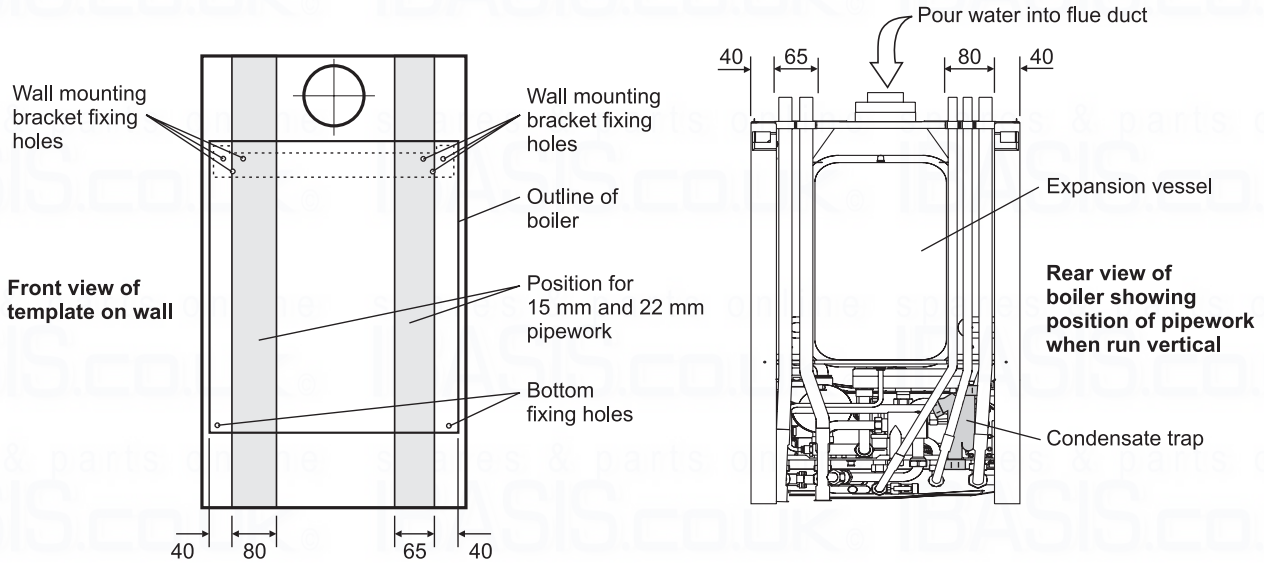

Fig. 12

4.5 CONNECT THE PIPEWORK - Fig. 13

1. Thoroughly flush out all the water pipework. Refer to Section 3.9.
2. The valves/fittings have been factory fitted, however, check that all the connections underneath the boiler have been tightened, especially the union bends.
   The heating union bends have been designed to enable the heating pipes to be routed from above and/or below using the same fitting.
   Note: When soldering to the boiler union bends, ensure the bends are not connected to the valves, otherwise the internal seals may be damaged.
3. Connect the system pipework to the boiler.
   Note: Do not forget that the pressure relief valve discharge pipe must be routed clear of the boiler to a drain in such a manner that it may be seen, but cannot cause injury to persons or property.
4. Connect the 22 mm condensate trap drain pipe to the condensate discharge pipe.
   Ensure that the condensate discharge pipe is as required in Section 3.10.
   Pour at least 0.5 litre of water into the flue duct, as shown in Fig. 12, and check the condensate discharge pipe for soundness.
5. Ensure that all the valves are closed (spindle flats at right angles to valve) and do not turn on the water or gas supplies at this stage.

A - Heating flow (22 mm)
B - Hot water outlet (15 mm)
C - Gas inlet (22 mm)
D - Cold water mains inlet (15 mm)
E - Heating return (22 mm)
F - Pressure relief valve (15 mm)
G - Heating drain point
H - Cold water inlet filter
I - Condensate discharge pipe

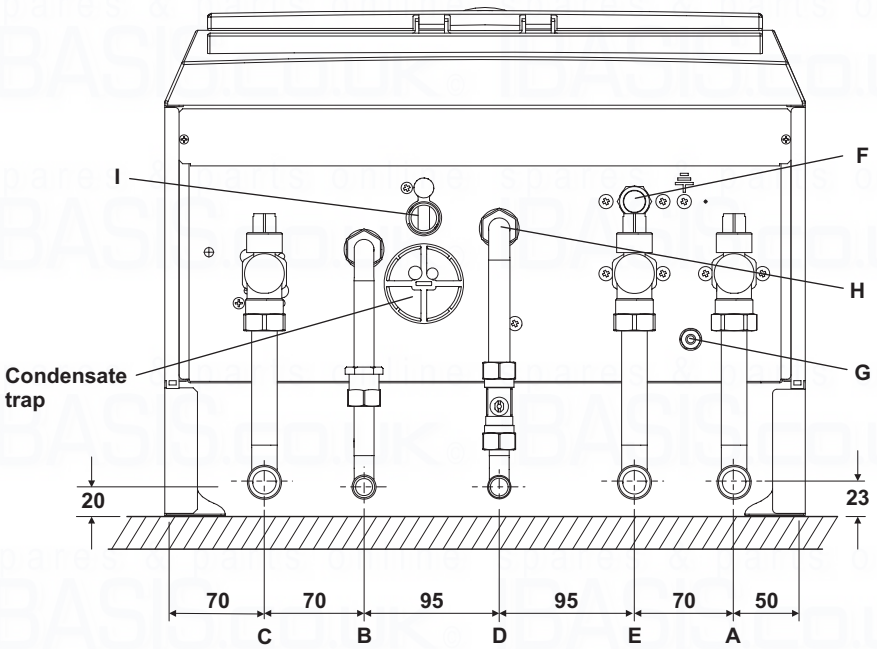

Fig. 13

4.6 FIT THE FLUE - Figs. 14, 15

The following procedure applies to fitting an Alpha CD Easy-Flue to both rear or side exit flue - horizontally only.

1. The CD Easy-Flues are suitable for use in the flue length ranges shown in the tables below.

   Note: Where the length is less than the minimum or more than the maximum, refer to Section 4.7.

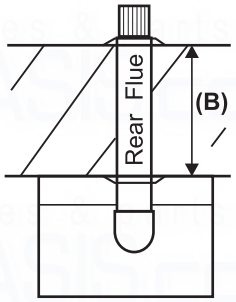

CD Easy-Flue	B (mm)	
	Max	Min
500 mm	510	300
1000 mm	955	745

Fig. 14

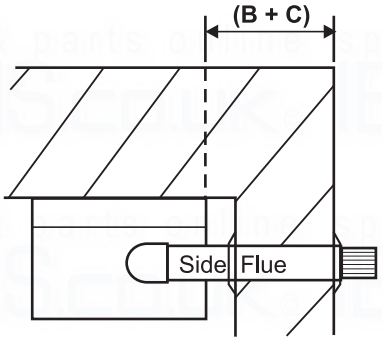

CD Easy-Flue	B + C (mm)	
	Max	Min
500 mm	450	240
1000 mm	895	685

Fig. 15

2. Determine the overall length (L) of flue required, (see Fig. 16) as follows:-

   Rear flue L = wall thickness (B) + 90 mm

   Side flue L = wall thickness (B) + distance between boiler and wall (C) + 150 mm

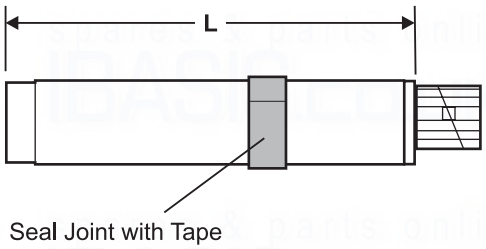

Fig. 16

3. Adjust the telescopic section of the flue to the distance 'L', ensuring that the two labels marked 'TOP' are aligned, then seal and secure the joint between the ducts with the sealing tape supplied.
4. Pass the flue assembly through the wall (from inside or outside).
   Note: Internal fitting - If there is no access to make good the outside wall, locate the flue sealing collar onto the outer duct of the flue immediately before the terminal grille onto the location provided. Push the flue assembly through the 130 mm flue hole, so that the collar completely passes through the wall. Then pull the flue assembly back into the correct position. Visually check that the collar is sealing the outside wall and that it is not restricting any of the openings of the flue terminal.

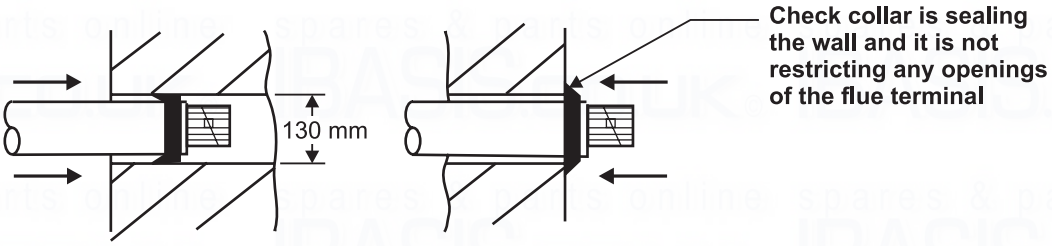

Fig. 17 - Fitting the flue from inside

5. Fit the inside flue sealing collar over the Easy-Flue. Fit the outside flue sealing collar onto the flue immediately before the terminal grille onto the location provided.
6. Slide the clamp (three screws) over the outer duct and pull the flue assembly towards the bend, locating the inner duct into the seal joint on the bend. Ensure the labels marked 'TOP' are positioned at the top before securing the flue assembly to the bend with the clamp (three screws) located centrally over the joint.

   Note: Check the flue terminal protrudes 90 mm out of the wall and the inner duct of the terminal is positioned correctly (see Fig. 18).
7. Make good the inside wall by pushing the inside flue sealing collar upto the wall.

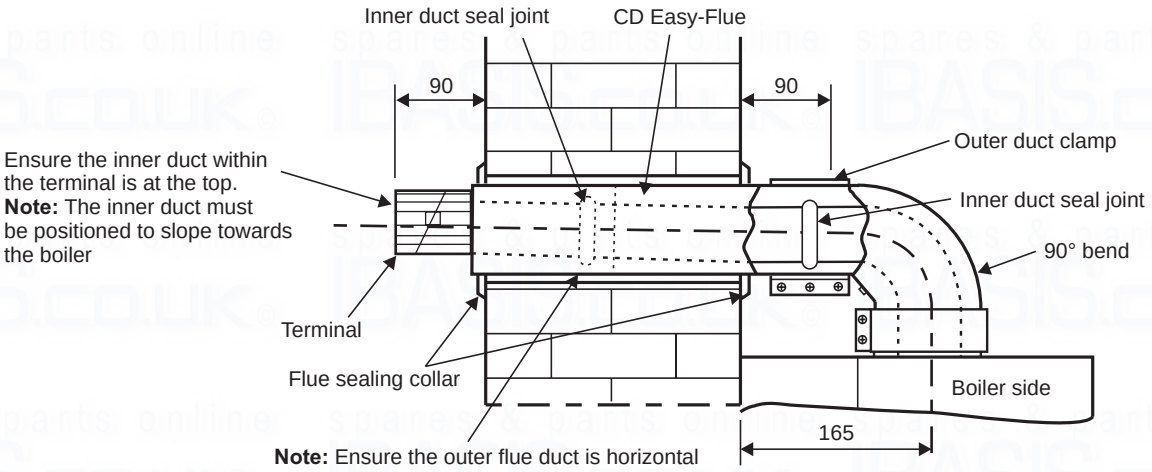

Fig. 18 - Rear flue

4.7 EXTENDING THE FLUE - Fig. 19

Note: The maximum horizontal flue assembly length must not exceed a length of 3 metres (this includes all the equivalent lengths of any extensions, bends etc, and any components used for plume management).

1. When the flue length required is more than the maximum or less than the minimum stated in Section 4.6, paragraph 1, refer to the table below.

Flue Length	Rear Flue (B)	Side Flue (B + C)	Comments
Up to maximum:-	2.91 m	2.85 m	Alpha CD 750 mm or 1000 mm flue extension (Part No. 6.2000750 or 6.2000150) is required to extend the range of telescopic flue. Refer to Section 4.7 paragraph 2 for instructions on how to extend the flue. **Note:** A 130 mm flue hole (127 mm core drill) is required in the wall.
Between:-	745 mm and 955 mm	685 mm and 895 mm	Within the standard Easy-Flue 1000 mm (Part No. 6.20001000) telescopic range.
Between:-	490 mm and 680 mm	25 mm and 615 mm	Discard first telescopic section of Easy-Flue 1000 mm (i.e. not with terminal) and cut to required length. 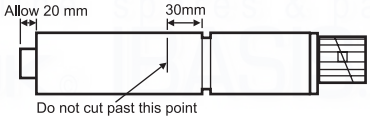
Between:-	300 mm and 510 mm	240 mm and 450 mm	Within standard Easy-Flue 500 mm (Part No. 6.2000500) telescopic range.
Between:-	90 mm and 240 mm	25 mm and 175 mm	Discard first telescopic section of Easy-Flue 500 mm (i.e. not with terminal) and cut to required length. 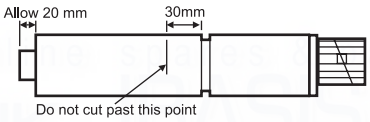
Less than above			Terminal may protrude somewhat from the outside wall.

2. If the flue is more than 0.5 m, the restrictor must be removed from the boiler flue adaptor, (see Fig. 19)
3. Use the template (supplied with the boiler) to mark the required flue position and cut a 130 mm diameter hole for the flue (use a 127 mm core drill). The size of the hole provides sufficient clearance for the clamps on the flue extension to pass through the hole.
4. Determine the overall flue length as described in Section 4.6, paragraph 2 to determine the number of Alpha CD 750/1000 mm flue extensions required.
5. Assemble the flue extensions together by locating the inner duct into the seal joint and secure each extension together with the clamps supplied (three screws). Ensure that the clamps are positioned centrally over the joints.
   Note: If it is required to cut an extension, **DO NOT** cut the end of the inner duct that incorporates the seal joint. Ensure the inner duct end without the seal joint is cut so that it is 15 mm longer than the outer duct.

6. Adjust the telescopic section of the Easy-Flue to the required length and secure the Easy-Flue with the sealing tape supplied. Fit the Easy-Flue to the extensions by locating the inner duct into the seal joint and secure with the clamp (three screws), ensuring it is located centrally over the joint.
7. Mark the end of the flue assembly 'TOP' where it is connected to the boiler, so that the 'TOP' of the flue terminal is aligned with the 'TOP' at the boiler end of the flue assembly.
8. Pass the complete flue assembly through the wall.
9. Position the seal and clamp (two screws) supplied, over the bend. Fit the bend to the boiler and rotate to the correct position and secure in position using the seal and clamp, ensuring that the seal is positioned centrally over both the bend and adaptor.
10. Slide the clamp (three screws) over the outer duct and pull the flue assembly towards the bend, locating the inner duct into the seal joint on the bend.
11. Secure the flue assembly to the bend with the clamp (three screws) ensuring it is positioned centrally over the joint, ensuring the 'TOP' marked on the outer duct is positioned at the top.
    Note: Check the flue terminal protrudes 90 mm out of the wall and that the inner duct of the terminal is positioned correctly, i.e. the inner duct within the terminal is at the top. See Fig. 19.
12. Make good the outside wall by fitting a flue sealing collar onto the location provided immediately behind the flue terminal grille. Make good the inside wall as required.
    Note: If flue sealing collars are being used to make good the inside wall, then they will need to be fitted before assembling the flue.

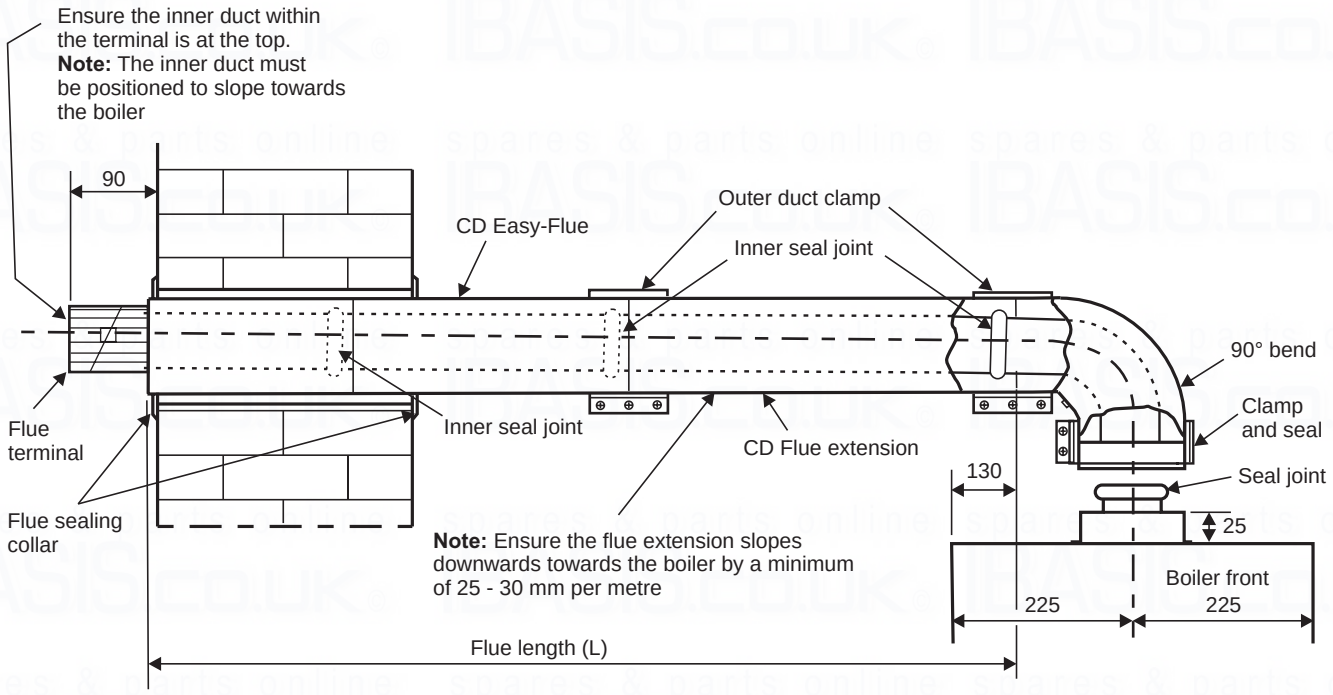

Fig. 19 - Side flue

4.8 CONNECT THE MAINS SUPPLY - Fig. 20

1. Gain access to the boiler terminal block by releasing the two fixing screws (one each side) securing the control panel and lowering the panel. Refer to Technical Data, Section 2.9 for connection details.
2. **Note:** This boiler has been fitted with a mains supply cable. However, if it is necessary to fit an alternative supply cable, ensure the cable that has been fitted is removed and connect as follows:-
   Remove the two screws securing the terminal block cover from the back of the control box (see Fig. 20). Pass the mains supply cable through the cable clamp and connect as follows:- Brown to L, Blue to N and Green/Yellow to ⏚. Ensure correct polarity.
   Note: Ensure that the length of the earth wire is such that if the supply cable is pulled out of its clamp the live and neutral wires become taut before the earth wire.
   The main terminal block can be removed by pulling it off the pins to give easy access to the terminals.
   Do not switch on the electrical supply at this stage.

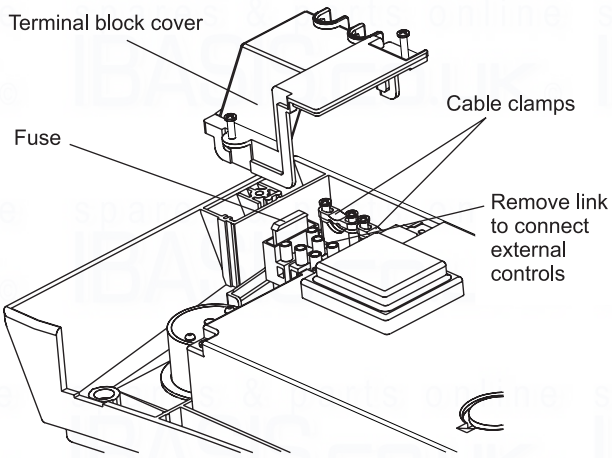

Fig. 20

3. **If an external control, i.e. room thermostat or external clock is to be fitted,** remove the terminal block cover and remove the link between terminals 1 and 2. Pass the cable through the cable clamp and connect it to terminals 1 and 2. Replace the terminal block cover. (Refer to Section 2.9).
4. Replace the terminal block, ensuring it is located correctly on the plastic pins and replace the cover.
5. Ensure that there is sufficient free cable to allow the control panel to be raised and lowered then tighten the cable clamp screws.
6. Leave the control panel open until commissioning procedures have been completed.
7. Carry out electrical system checks - Short circuit, Polarity, Earth continuity and Resistance to earth with a suitable multimeter.

4.9 FITTING AN INTERNAL CLOCK KIT (Optional) - Fig. 21

Ensure the electrical supply to the boiler is isolated.

1. Remove the two screws securing the clock cover at the rear of the control panel.
2. Remove and discard the clock blanking panel.
3. Insert the clock into the opening and secure in place with the screws supplied - do not overtighten the screws.
4 **IMPORTANT - Only use an Alpha single channel clock. Do not fit a two channel clock to an HE25 or HE33**
   i). Disconnect the clock wiring from the in-line connector and connect the wires to the clock as follows:-
   Blue wire to terminal 1, Brown wire to terminal 2 and Red wires to terminals 3 and 4, (or as per the instructions supplied with the clock). Ensure wiring is correct.
   ii). Replace the clock cover. Do not overtighten the fixing screws.
   iii). Leave the control panel open until commissioning procedures have been completed.

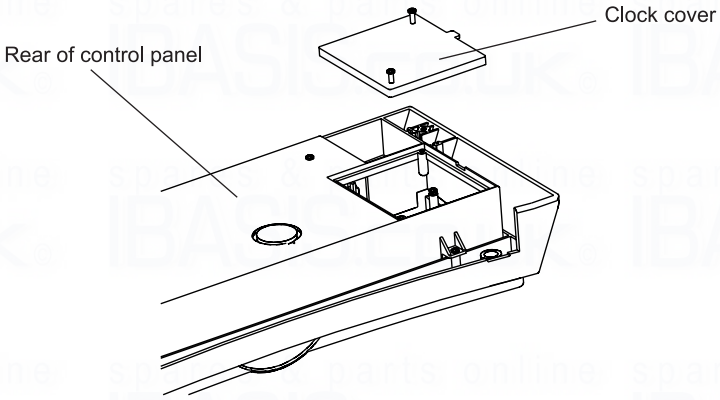

Fig. 21

5 COMMISSIONING

When commissioning the boiler, ensure the Benchmark Log Book is completed.

5.1 FILL THE SYSTEM

1. The boiler is fitted with an automatic air vent positioned on the pump (see Fig. 2). The vent is always open and has no sealing cap.
2. Open the central heating flow and return valves (slot in-line with valve) (see Fig. 13).
3. Open the fill point valve on the filling loop until water is heard to flow. To aid venting, the boiler drain point (see Fig. 2) may be opened until water flows out. Close the drain point as soon as water appears.
4. To remove the air - Vent each radiator in turn, starting with the lowest in the system.
5. It is important that the pump is properly vented to avoid it running dry and damaging its bearings. Unscrew and remove the cap from the centre of the pump. Using a suitable screwdriver rotate the exposed spindle about half a turn, then replace the cap.
6. Check the operation of the pressure relief valve (see Fig. 2) by turning the head anti-clockwise until it clicks. The click is the valve lifting off its seat allowing water to escape from the system - check that this is actually happening.
7. Continue to fill the system until the pressure gauge indicates 1.0 bar. Close the fill point valve and check the system for water soundness, rectifying where necessary. Disconnect the filling loop from the mains supply.
   Water may be released from the system by manually operating the drain point (see Fig. 2) until the system design pressure is obtained. The system design pressure (cold) should be between 0.75 and 1.25 bar.
   Refer to Sections 3.7 and 3.8. System volume, Flushing and Filling the system.
8. Open the mains water inlet valve (see Fig. 13). Turn on all hot water taps and allow water to flow until no air is present. Turn off taps.
9. Ensure that the condensate trap has been filled with water. Refer to Section 4.5, paragraph 4.

5.2 BOILER CONTROLS - Fig. 22

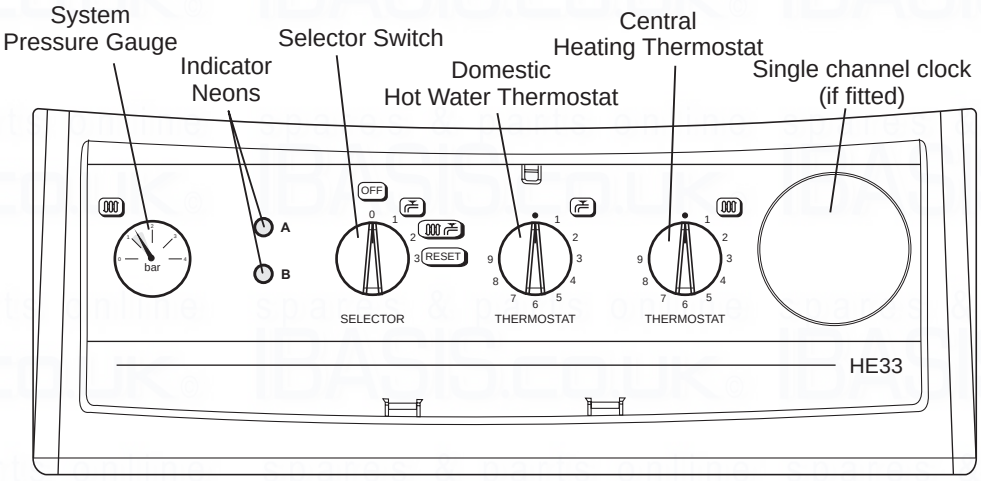

Fig. 22

5.3 TEST FOR GAS TIGHTNESS AND PURGE THE SUPPLY

1. With the boiler gas service cock closed (slot at right angles to valve). Pressure test the gas supply and inlet pipework connection to the boiler gas service cock for tightness in accordance with BS 6891 or IGE/UP/1B.
2. Loosen the gas inlet pressure test point screw on the gas valve (see Fig. 23). Ensure the gas supply is on and open the boiler service cock to purge in accordance with BS 6891 or IGE/UP/1B.
3. Retighten the test point screw and test for gas tightness. Close the boiler gas service cock.

5.4 INITIAL LIGHTING - Refer to Fig. 22

1. Ensure that the gas and electrical supplies to the boiler are off and that the mains water inlet valve and the central heating flow and return valves are open.
2. Turn on the gas and electrical supplies to the boiler.
3. Ensure all external controls are calling for heat. If the optional Clock is fitted, refer to the User's instructions, set the time and ensure the Clock is in an 'on' mode.
4. Set the hot water and central heating temperature selectors to maximum.
5. Set the selector switch to (DHW only).
6. Open a hot water tap, the main burner will light and the boiler will provide hot water. Close the tap and the burner will go out.
7. Set the selector switch to (CH and DHW). The boiler will now run in the central heating mode. The pump will start, the fan will start; once the pressure switch is proved, the main gas valve solenoid will open allowing the main burner to light from the ignition electrodes.

5.5 CHECK THE BURNER PRESSURES - Fig. 23

Turn the boiler off. Loosen the burner pressure test point screw on the gas valve and connect a pressure gauge. Allow the boiler to run for 10 minutes and check the burner pressures.

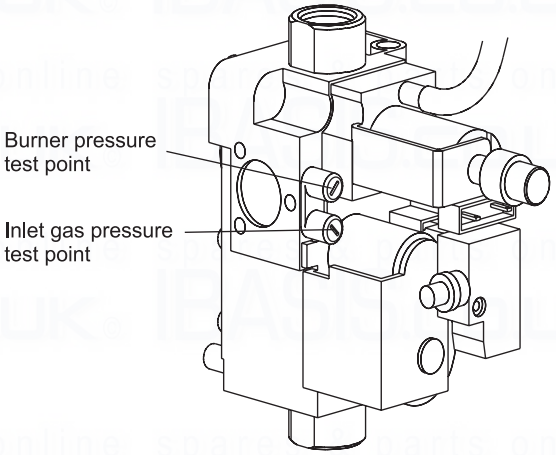

Fig. 23

Hot water mode

1. Set the selector switch to (DHW only) and fully open a hot water tap.
2. The burner will light at the ignition rate and the burner pressure will increase to maximum.
3. Gradually close the hot tap and check that the burner pressure decreases to its minimum. Fully open the tap and check that the burner pressure increases. Close the tap and check that the burner goes off.

   Note: The burner pressure settings have been factory set and do not require adjusting. If incorrect, check that the inlet gas pressure is 20 mbar. If the inlet gas pressure is not 20 mbar, either the pipework is too small or the gas supply to the house is insufficient, in which case contact your gas supplier.

Central heating mode

1. Set the selector switch to (DHW and CH).
2. The burner will light at the ignition rate and will increase to the factory pre-set maximum output after 1 minute.
3. Turn off the boiler. Disconnect the pressure gauge and tighten the test point screw.

Test for gas tightness using suitable leak detection fluid.

Note: Refer to Technical Data, Section 2.1 for burner pressure settings.

5.6 FINAL COMMISSIONING

1. Allow the heating system to heat up, then balance the system to achieve the necessary temperature difference across the heating flow and return pipes at the boiler and check the system volume and pressure. (Refer to Technical Data, Sections 2.2 and 2.8).
2. Turn off the boiler.
3. Thoroughly flush out the water pipework (refer to Section 3.9).
   Clean the mains water inlet filter (see Fig. 13).
4. Re-pressurise the system as described in Section 5.1.

5.7 FINAL ASSEMBLY

1. Raise the control panel and secure in position with the screws provided.
2. If the boiler is to be left in service with the User, set the controls, clock (if fitted, see User's Operating manual) and room thermostat (if fitted) to the User's requirements.
3. If the boiler is not to be handed over immediately, close the boiler gas service cock and switch off the electrical supply.
4. If there is any possibility of the boiler being left during frost conditions, then the boiler and system should be drained (refer to Section 8.2). It is recommended that a label is attached to the boiler drawing attention to the fact that the system has been drained.
5. Complete the details of the installation on page 39 of this manual and the Benchmark log book.

5.8 USER INFORMATION

The User must be advised (and demonstrated if necessary) of the following important points:-

1. How to light and turn off the boiler and how to operate the system controls.
2. The importance of annual servicing of the boiler to ensure safe and efficient operation.
3. That any servicing or replacement of parts must only be carried out by CORGI registered personnel.
4. Ensure that the boiler controls and room thermostat (if fitted) are set to the User's requirements.
5. Tell the User about the sealed system pressure.
6. Tell the User that if the electrical supply is on and the boiler has not operated for 24 hours for heating or hot water, the pump will automatically operate for 5 minutes.
7. Explain to the User that an internal frost thermostat is fitted in the boiler, and that the electrical supply to the boiler must be left on for the thermostat to operate.
8. Explain to the User that in certain weather conditions the terminal will emit a plume of steam, i.e. water vapour. This is safe and quite normal.
9. Show the User the position of the pressure relief valve and condensate discharge pipes.
10. Hand the User's instructions to the User.
11. Ensure the Benchmark Checklist in Section 12, page 39, has been completed after the boiler has been installed and commissioned.
12. Leave these Installation and Servicing instructions with the User for use on future calls

6 BOILER OPERATION

The boiler operating mode is controlled by the selector switch on the facia panel.

When set to , the boiler will only operate in the Domestic Hot Water mode. When set to , it will operate in the Domestic Hot Water and Central Heating mode.

Note: The clock (if fitted) only controls the operating times of the central heating, not domestic hot water - DHW is available continuously. Domestic hot water supply always takes priority over central heating. If a demand for hot water is required during a central heating period, the boiler will automatically switch to the hot water mode until the demand is satisfied. This interruption in the central heating is only when the demand for hot water is present and should not be noticed by the User.

6.1 CENTRAL HEATING MODE

If there is a call for heat, the pump will start to circulate the central heating water. The fan will run at full speed; once the air pressure switch is proved the burner will light. The burner output then automatically adjusts to suit the system demand; as the temperature of the water in the boiler approaches that set by the adjustable temperature selector, the burner output is reduced. When the set temperature is reached, the burner is turned off. The fan continues to run for 30 seconds and the pump continues to run for three minutes to remove residual heat build up in the boiler before allowing the burner to relight. If the CH sensor has not registered the pre-set temperature but the room thermostat is satisfied the burner is turned off. The fan continues to run for 30 seconds and the pump continues to run for 30 seconds. In this instance there is no 3 minute delay before the burner will relight.

Note: If the system pressure is very low, the primary pressure switch will prevent the boiler from operating.

If there is a demand for DHW during the 3 minute burner delay, the boiler will operate to provide DHW until the tap is closed; the boiler will then immediately revert to provide CH if there is a demand.

6.2 DOMESTIC HOT WATER MODE

When a demand for hot water (by opening a hot tap, etc.) is sensed by the flow switch, the pump starts and the burner lights at its middle output, increasing immediately to its maximum output. Water in the boiler is then diverted from the central heating system to the domestic hot water heat exchanger, heating the incoming mains water. The burner output is varied to maintain the temperature of the hot water as that set by the adjustable temperature selector. When the flow switch senses that hot water is no longer required the burner is turned off and the boiler immediately returns to the central heating mode.

In both modes the fan operates at full speed before the burner lights, remaining at that speed until the demand is satisfied.

When the burner is turned off, the fan will continue to run for 30 seconds and the pump will stop immediately if the selector is set for hot water only.

6.3 FROST THERMOSTAT

The boiler incorporates a built in frost thermostat which automatically turns on the boiler and pump if the water in the boiler falls below 8°C, providing the electrical supply is on and the selector switch is set to position (1) or position (2). The boiler will operate until the water temperature in the system reaches approximately 40°C.

6.4 PUMP

If the electrical supply is on and the boiler has not operated for 24 hours for heating or hot water, the pump will operate automatically for five minutes every 24 hours.

6.5 INDICATOR NEONS

When neon A (red) and neon B (yellow) are illuminated, the following conditions apply:-

Neon	
B	Flashing very slowly (every 5 seconds) - Electricity supply to the boiler is on.
B	Illuminated continuously - Indicates the burner is alight.
B	Flashing on and off - Temperature sensor fault.
A	Flashing on and off - Overheat or flue thermostat has operated. Rotate selector switch to the reset position (3) to reset.
A	Illuminated continuously - Burner has failed to light. Rotate the selector switch to the reset position (3) and the ignition sequence will restart after a delay of about 30 seconds.
A and **B**	Flashing on and off at the same time - Blocked flue or fan fault.
A and **B**	Flashing on and off alternatively - System pressure is very low and re-pressurisation is required.
A Illuminated continuously and **B** flashing - Pump fault or restricted flow.	

7 ROUTINE SERVICING

To ensure efficient operation of the boiler it is recommended that it is checked and serviced as necessary at regular intervals. The frequency of servicing will depend upon the particular installation conditions and usage, but in general once per year should be adequate.

It is the law that any service work must be carried out by a competent person, i.e. CORGI registered personnel.

Warning: Before servicing the boiler, isolate the electrical supply and close the boiler gas service cock. Allow the boiler to cool.

The data label is positioned on the inside of the left hand side panel.

Always test for gas tightness after servicing any gas carrying components.

Always carry out electrical system checks i.e. Earth Continuity, Resistance to Earth, Short Circuit and Polarity with a suitable meter after servicing.

Notes: **1.** Prior to servicing, it is recommended that a flue gas analyser is used to measure the performance of the boiler (refer to Fig. 2 for the position of the flue sampling point). If the CO/CO_2 ratio measured is greater than 0.004 **or** when other checks and comments from the customer have indicated that there may be problems, cleaning of the heat exchanger will be necessary. All Sections 7.1, 7.2, 7.3 and 7.4 **must** be carried out. Repeat the flue gas analyser test after reassembling the boiler and check that the CO/CO_2 ratio is less than 0.004.

2. If the CO/CO_2 ratio measured is less than 0.004 and other checks and comments from the customer suggest there are no problems then only Section 7.1 and Section 7.2 paragraphs 1, 2 and 3 need to be carried out to allow a visual check of the components within the room sealed chamber.

3. If a flue gas analyser is not available, then all Sections 7.1, 7.2, 7.3 and 7.4 **must** be carried out.

7.1 IMPORTANT NOTES PRIOR TO SERVICING

1. Check the flue terminal outside and ensure it is not blocked.
2. Run the boiler and check the operation of its controls.
3. Refer to Fig. 2 for location of flue sampling point.
4. Ensure that all system connections and fittings are sound. Remake any joints and check the tightness of any fittings that may be leaking.
5. It is recommended that the operation of the safety valve is checked by turning the head anti-clockwise until it clicks. The click is the safety valve lifting off its seat allowing water to escape from the system - check that this is actually happening.

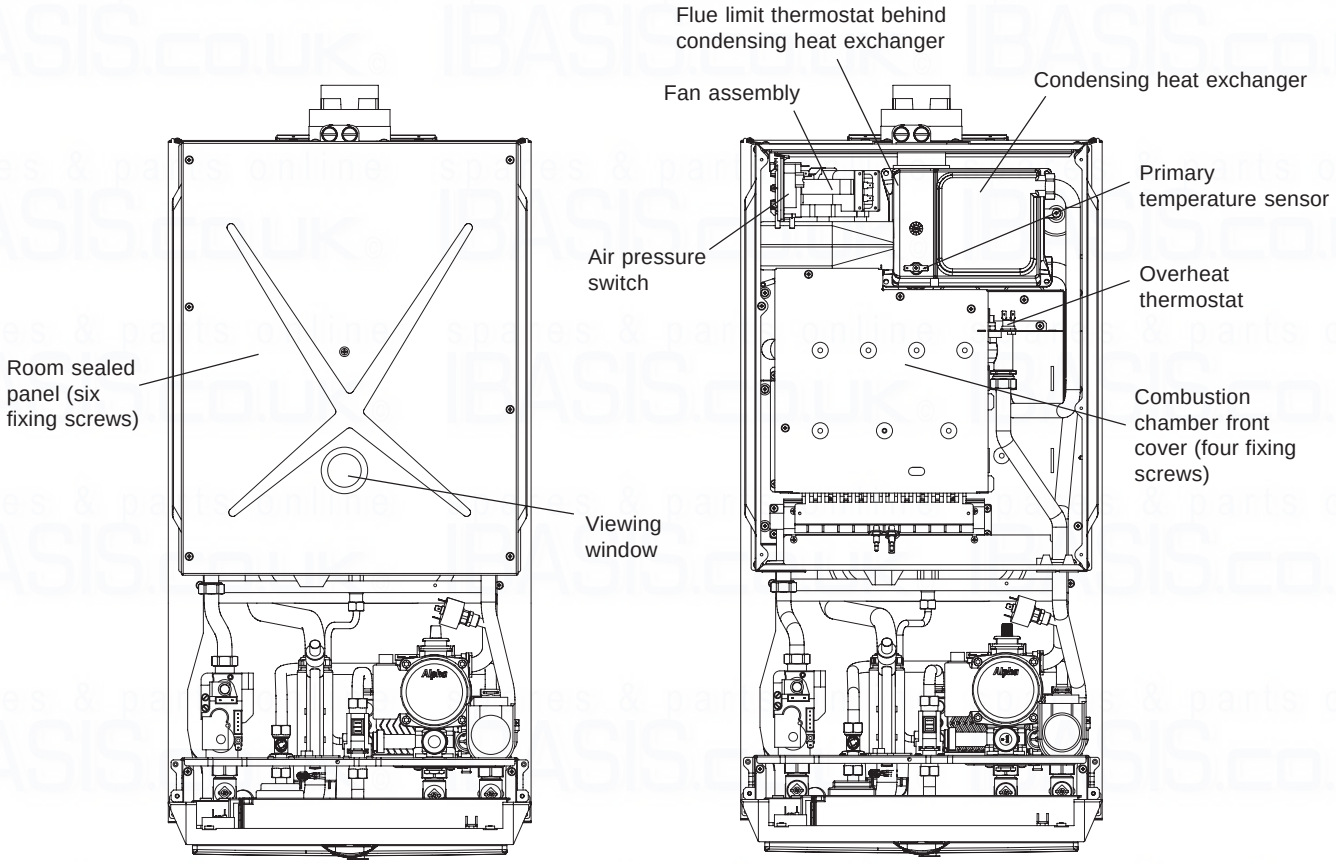

Fig. 24

6. Refill, vent and re-pressurise the system as necessary. (Refer to Commissioning, Section 5.1).
   If the system pressure exceeds 2.5 bar when operating at maximum temperature, the heating expansion vessel should be checked and re-pressurised, if necessary.

   Note: 1. Check the expansion vessel charge only when the system pressure is zero.
   2. The expansion vessel pressure test point is accessible from the top and rear of the boiler.
7. Check that the condensate trap drain pipe is connected and all joints are sound.
8. Record details of the service in the Service Record Section on page 40 of this manual and in the Benchmark Log Book.

7.2 PREPARE FOR SERVICING - Fig. 24

1. Ensure the electrical supply is isolated and the gas supply is off.
2. Unscrew the two screws securing the control panel and lower the panel.
3. Lift the case front panel upwards slightly and pull it forwards to remove it from the boiler.
4. Remove the six screws securing the room sealed chamber panel and remove the panel, taking care not to damage the seal.
5. Remove the four screws securing the combustion chamber front cover and remove the cover.
6. Disconnect the electrode leads from the electrodes and the in-line connector to the flame sensing electrode.
7. Remove the four screws securing the burner and baffle and withdraw them out of the boiler. Take care not to damage the side insulation panels.

7.3 CLEANING THE BOILER

1. Remove any deposits from heat exchanger using a suitable soft brush. Do not use a brush with metallic bristles.
2. Check the condition of the combustion chamber insulation panels. Any damaged panels must be replaced. (Refer to Component Replacement, Section 8.23).
3. Check the condition of the burner injectors on the manifold, carefully clean them with a soft brush if necessary.
   Do not use a brush with metallic bristles as this might damage the injectors.
4. Remove any fallen deposits from the bottom of the inner case.
5. Unscrew and replace any injector that appears damaged.

   Note: When replacing an injector always use the washer supplied with the injector between the injector and the gas manifold.
6. Clean the top of the burner with a soft brush and check that the flame ports are clear. Blockages may be removed with a stiffer brush. Tap the burner, open end down, to remove any deposits from inside.
7. Check the condition of the electrodes.
9. Check the spark gap, positioning and height of the electrodes (see Fig. 25).
10. Check that the fan impeller is clean and free to rotate.
11. Unscrew the condensate trap drain cap, clean and remove any deposits from the trap.

    Note: Before removing the cap, ensure that the water released from the trap can be contained to avoid spillage. The trap will contain no more than 200 cc of condensate water. Replace the drain cap.

7.4 RE-ASSEMBLE THE BOILER

1. Replace the burner, ensuring it is located correctly and secure it in position using the four screws previously removed.
2. Replace the combustion chamber front cover, ensuring it is correctly located.
3. Ensure the electrode leads are connected and the seals are in position in the bottom of the inner case.
4. Test the connections for gas tightness and check the burner pressures. (Refer to Commissioning, Sections 5.4 and 5.5).
5. Ensure that the room sealed chamber panel seal is intact and in position, replace the panel ensuring it has been located correctly and secure it in position with the screws previously removed.
6. Place the front case panel in position as shown in Fig. 24 and secure in position.
7. Raise the control panel and secure in position with the two screws provided.
8. Check the operation of the boiler. (Refer to Boiler Operation, Section 6).
9. Return all controls to their original settings.

8 COMPONENT REPLACEMENT

It is the law that any service work must be carried out by a competent person, i.e. CORGI registered personnel.

Warning: Before replacing any boiler components, isolate the electrical supply and close the boiler gas service cock. Allow the boiler to cool.

Always test for gas tightness after replacing any gas carrying components or disturbing any gas connections.

Check the operation of the boiler. (Refer to Boiler Operation, Section 6).

Ensure that all the controls are returned to their original settings.

The replacement of components in Sections 8.3 to 8.16 does not require draining of the boiler.

8.1 GENERAL ACCESS - Fig. 24

Ensure the electrical supply is isolated and the gas supply is off.

1. **If access is required behind the control panel -** Release the two fixing screws (one each side) securing the control panel and lower the panel.
2. **To gain access behind the casing -** Lift the case front panel upwards slightly and pull it forwards to remove it from the boiler (see Fig. 24). If required, remove the side panels by removing the bottom fixing screw and lifting forwards and upwards.
3. **To gain access to the combustion chamber -** Remove the four screws securing the room sealed chamber panel and remove the panel, taking care not to damage the seal.
   Note: When replacing the panel, ensure the seal is intact and that the panel has been located correctly.
4. **To gain access to the control panel components -** Remove the five screws securing the rear cover and carefully raise the cover from the front. When replacing the cover, ensure no wires are trapped and all wiring is secured. Secure with five screws - do not overtighten.

8.2 DRAINING THE BOILER - Refer to Figs. 2 or 13

Isolate the electricity supply and close the boiler gas service cock (see Fig. 13). Allow the boiler to cool.

1. **Heating circuit**
   Close the central heating flow and return valves (see Fig. 13).
   Connect a suitable pipe to the drain point (see Fig. 2) and route it to a suitable container. Open the drain point.
2. **Hot water circuit**
   Close the mains water inlet valve (see Fig. 13).
   Open any hot tap below the level of the boiler to allow as much draining as possible.

Note: Some water will remain in the components and care must be taken when removing them.

8.3 IGNITION ELECTRODE LEAD - Refer to Fig. 27

1. Gain access to the combustion chamber as in Section 8.1.
2. Disconnect the lead from the electrode.
3. Disconnect the lead from the PCB, noting its position (see Fig. 27).
4. Fit the new lead ensuring it passes through the locations in the control panel and grommets in the base of the combustion chamber.
5. Re-assemble in reverse order.

8.4 ELECTRODES - Fig. 25

Gain access to the combustion chamber as in Section 8.1.

1. Remove the five screws securing the combustion chamber front cover and remove the cover.
2. Disconnect the leads from the electrodes. Remove the grommet in the bottom of the chamber, disconnect the flame sensing electrode in-line connector and withdraw the lead.
3. Withdraw the main burner out of the boiler, see Section 7.2. Take care not to damage the side insulation panels.
4. **Flame sensing electrode**
   Remove the screw securing the electrode and withdraw the electrode.
   Fit the new electrode, ensuring it is positioned correctly (see Fig. 19).
   Note: Fit the in-line connector to the lead by pushing it into the connector after the burner has been fitted.
5. **Ignition electrodes**
   Remove the screw securing the electrode and withdraw the electrode.
   Fit the new electrode, ensuring both are positioned correctly and the spark gap is correct (see Fig. 19).

Re-assemble

1. Replace the burner, ensuring it is located correctly.
2. Replace the combustion chamber front cover, ensuring it is correctly located.
3. Complete re-assembly as described in Routine Servicing, Section 7.4 paragraphs 4 to 9.

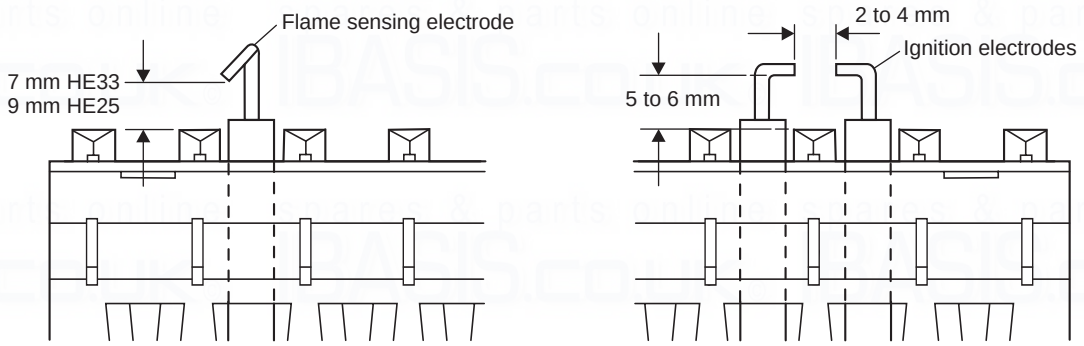

Fig. 25

8.5 MAIN BURNER

1. Remove the burner as described in Routine Servicing, Section 7.2.
2. Re-assemble with a new burner as described in Routine Servicing, Section 7.4.

8.6 BURNER INJECTORS

1. Remove the burner as described in Routine Servicing, Section 7.2.
2. Unscrew the damaged injector and screw in a replacement.

   Note: When replacing an injector always use the washer supplied with the injector between the injector and the gas manifold.
3. Re-assemble as described in Routine Servicing, Section 7.4.

8.7 FAN - Fig. 24

1. Gain access to the combustion chamber as in Section 8.1.
2. Remove the air pressure switch as described in Section 8.8.
3. Disconnect the fan wiring.
4. Remove the two screws securing the fan to the back panel. Slide the fan to the left and remove from the condensing heat exchanger. Fit the new fan and re-assemble in reverse order.

   Note: Connect the fan wiring, blue to terminal N, brown to terminal L and green/yellow to terminal ⏚.
5. Re-assemble and test the boiler as described in Routine Servicing, Section 7.4 paragraphs 5 to 9.

8.8 AIR PRESSURE SWITCH - Fig. 24

1. Gain access to the combustion chamber as in Section 8.1.
2. Disconnect the pressure sensing tube.
3. Disconnect the wiring and remove the switch from the clip.
4. Connect the wiring to the new switch. The polarity of the wires is not important.
5. Secure the new switch in position and connect the pressure sensing tube to the connection nearest the fan.
6. Re-assemble in reverse order.

8.9 OVERHEAT THERMOSTAT - Fig. 24

1. Gain access to the combustion chamber as in Section 8.1.
2. Disconnect the wiring from the overheat thermostat.
3. Unscrew the overheat thermostat from the heat exchanger.
4. Fit the new overheat thermostat and re-assemble in reverse order.

8.10 FLUE LIMIT THERMOSTAT - Fig. 24

1. Gain access to the combustion chamber as in Section 8.1.
2. Remove the fan as in Section 8.7.
3. The flue limit thermostat is located behind the condensing heat exchanger on the left hand side (see Fig. 24).
4. Disconnect the inline connector from the thermostat.
5. Using a 17 mm spanner unscrew the thermostat from the rear of the heat exchanger and disconnect the wiring from the thermostat.
6. Fit a new limit thermostat and re-assemble in reverse order.

8.11 GAS VALVE - Fig. 26

1. Gain access behind the casing as in Section 8.1.
2. Disconnect the coil wires and pressure tube from the gas valve.
3. Loosen the one screw (see Fig. 26) securing the electrical plug and disconnect the plug.
4. Disconnect the burner manifold union and the gas inlet pipe union from the manifold.
5. Remove the two manifold screws from beneath the boiler.
6. Carefully push the valve towards the rear of the boiler (take care not to damage the manifold sealing washer) and lift out the valve assembly.
7. Fit the new assembly and re-assemble in reverse order.
8. Light the boiler and test for gas tightness. (Refer to Commissioning, Section 5.4).
9. Complete re-assembly as described in Routine Servicing, Section 7.4 paragraphs 5 to 9.

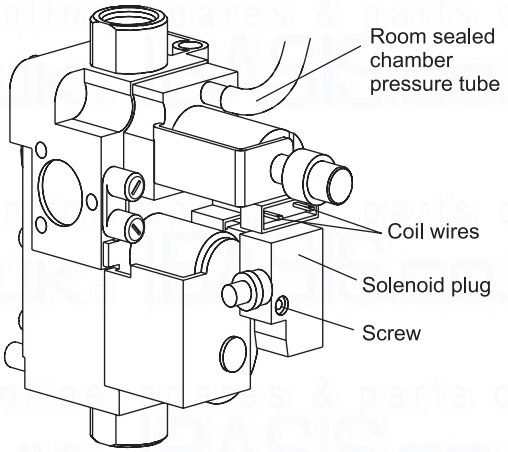

Fig. 26

8.12 VIEWING WINDOW - Fig. 24

1. Gain access behind the casing as in Section 8.1.
2. Remove the rubber window frame and remove the damaged glass.
3. Re-assemble in reverse order with a new glass. Ensure the rubber frame is located correctly in the front panel.

8.13 INTERNAL FUSE - Refer to Fig. 20

The fuse is located in the boiler terminal block.

1. Gain access as described in Installation, Section 4.8.
2. Lift out the fuse holder and remove the fuse. Fit a fast blow 2 A fuse as a replacement, ensuring that the holder snaps into position.
3. Re-assemble in reverse order, ensuring the terminal block is located correctly on the plastic pins.

8.14 PCB - Fig. 27

1. Gain access behind the control panel as described in Section 8.1.
2. Disconnect all the wiring connectors from the PCB.
3. Remove the five fixing screws and carefully withdraw the board from the switch spindles.
4. Re-assemble in reverse order. Refer to the wiring diagram in Section 9.1 for connections.

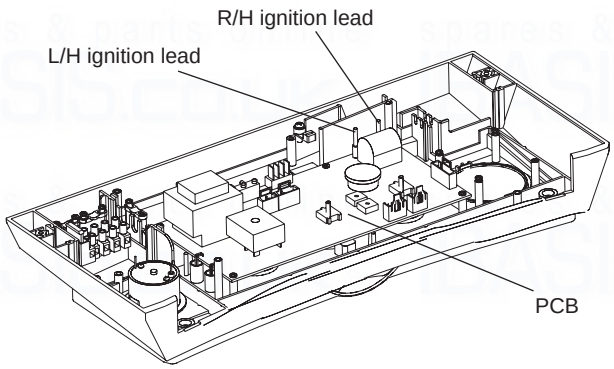

Fig. 27

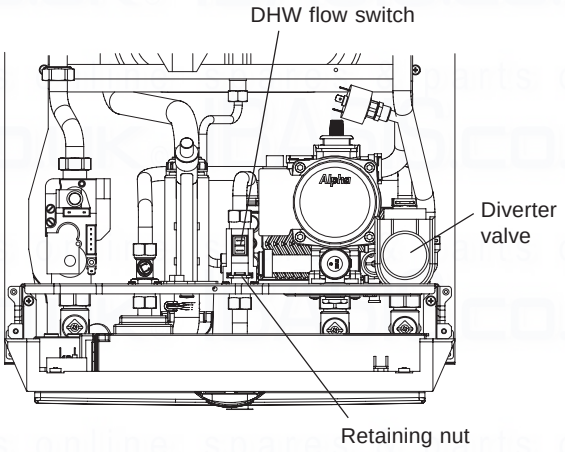

Fig. 28

8.15 DIVERTER VALVE MOTOR ASSEMBLY - Fig. 28

1. Gain access behind the front casing as described in Section 8.1.
2. Remove the diverter valve motor head by unplugging its electrical connection and removing the retaining clip from the back of the motor.
3. Withdraw the motor forwards from the valve body.
4. Re-assemble in reverse order with a new motor.

8.16 CLOCK (if fitted) - Refer to Fig. 21

Note: When replacing a clock, only use a **single channel** clock. Refer to Section 2.9 and 4.9.

1. Gain access behind the control panel as described in Section 8.1.
2. Remove the two screws securing the clock cover at the rear of the control panel.
3. Disconnect the wiring from the clock.
4. Remove the clock retaining screws and withdraw the clock from the control panel.
5. Fit the new clock, ensuring the wires are connected correctly. Refer to Section 4.9.
6. Re-assemble in reverse order. Refer to the User's instructions and the boiler's control cover to set the clock.

8.17 DHW FLOW SWITCH - Fig. 28

1. Gain access behind the front casing as described in Section 8.1.
2. Isolate the mains water supply and open all hot taps to drain any water from the boiler.
3. Disconnect the wires from the switch.
4. Undo the nuts at the inlet and outlet of the switch and undo the retaining nut at the bottom. Lift out the switch.
5. Fit the new switch and re-assemble in reverse order.

8.18 PRIMARY HEAT EXCHANGER

1. Gain access to the combustion chamber and drain the boiler heating circuit as described in Sections 8.1 and 8.2.
2. Remove the five screws securing the combustion chamber front cover and remove the cover.
3. Remove the overheat thermostat (Section 8.9) and the primary temperature sensor (Section 8.22).
4. Remove the right hand side baffle plate by lifting it up.
5. Disconnect the two unions from the heat exchanger flow and return pipes.
6. Slide the heat exchanger off the pipes and remove it by carefully withdrawing it out of the boiler.
7. Re-assemble in reverse order.
8. Refill and pressurise the system. (Refer to Commissioning, Section 5.1).

8.19 CONDENSING HEAT EXCHANGER - Fig. 24

1. Remove the fan as described in Section 8.7.
2. Drain the boiler as described in Section 8.2.
3. Disconnect the two primary flow and return connections and disconnect the flue limit thermostat connection.
4. Remove the two screws securing the flue hood and slide it forwards from the heat exchanger.
5. Remove the righthand screw securing the condensing heat exchanger, lower the heat exchanger from the flue adaptor and pull it forwards and out of the condensate socket in the rear panel.
6. Fit a new heat exchanger and re-assemble in reverse order.
7. Refill and pressurise the system. (Refer to Commissioning, Section 5.1).

8.20 COMBUSTION CHAMBER INSULATION

1. Gain access to the combustion chamber as described in Section 8.1.
2. Remove the screws securing the combustion chamber cover and remove the cover.
3. The front and right hand side insulation panels slide out.
4. To replace the rear and left hand side insulation panels, remove the heat exchanger as described in Section 8.26.
5. Remove the two screws securing the left hand side panel. Slide out the side panel, then prise out the top of the rear insulation panel and lift it up and out of the boiler.
6. Fit new panels and re-assemble in reverse order.
7. Refill and pressurise the system. (Refer to Commissioning, Section 5.1).

8.21 PRESSURE GAUGE - Fig. 29

1. Gain access behind the casing and drain the boiler heating circuit as described in Sections 8.1 and 8.2.
2. Remove the circlip securing the pressure gauge sensor and withdraw the sensor.
3. Remove the main cable grommet in the bottom panel and remove the sensor tube.
4. Depress the two lugs on the pressure gauge and push it out of the control panel.
5. Fit the new gauge using a new 'O' ring on the manifold connection if necessary.
6. Refill and pressurise the system. (Refer to Commissioning, Section 5.1).

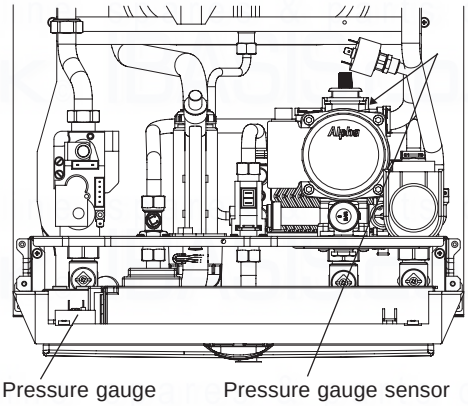

Fig. 29

8.22 TEMPERATURE SENSORS - Figs. 24 or 30

Note that both sensors are the same.

1. Gain access as described in Section 8.1 (behind the casing for the DHW sensor or to the combustion chamber for the primary temperature sensor) and drain (heating circuit for primary sensor or hot water circuit for DHW sensor) as described in Section 8.2.
2. **Primary Sensor -** The primary sensor is positioned on the right hand side of the heat exchanger, see Fig. 24. Disconnect the wiring and unscrew the sensor. Re-assemble in reverse order with a new sensor and sealing washer.

2a. **DHW Sensor -** Close the mains cold water inlet valve and open the lowest hot water tap to drain the DHW system. Disconnect the wiring and unscrew the sensor, see Fig 30. Re-assemble in reverse order with a new sensor, replacing the sealing washer if necessary.

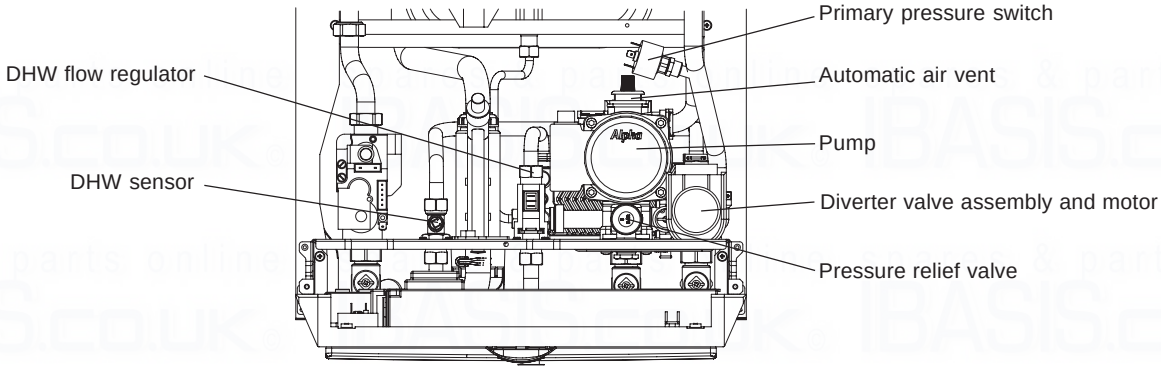

Fig. 30

8.23 AUTOMATIC AIR VENT - Fig. 30

1. Gain access behind the front casing and drain the boiler heating circuit as described in Sections 8.1 and 8.2.
2. Remove the retaining clip from the manifold and lift out the automatic air vent. Fit a new one using a new 'O' ring.
3. Refill and pressurise the system. (Refer to Commissioning, Section 5.1).

8.24 PUMP - Fig. 30

Gain access behind the front casing and drain the boiler heating circuit as described in Sections 8.1 and 8.2.

Pump head

1. Using a 5 mm Allen key remove the four socket head screws securing the pump head to the body. Withdraw the head, remove the wiring cover and disconnect the plug.
2. Connect the plug to the new head. Ensure the pump is set to maximum (3) and re-assemble in reverse order.
3. Refill and pressurise the system. (Refer to Commissioning, Section 5.1).

8.25 PRIMARY PRESSURE SWITCH - Fig. 30

1. Gain access behind the casing and drain the boiler heating circuit as described in Sections 8.1 and 8.2.
2. Disconnect the wiring from the pressure switch.
3. Unscrew the switch from the pipework.
4. Using the new seal supplied, re-assemble in reverse order.
   When connecting the wiring to the new switch the polarity of the wires is not important.

8.26 PRESSURE RELIEF VALVE - Fig. 30

1. Gain access behind the front casing and drain the boiler heating circuit as described in Sections 8.1 and 8.2.
2. Disconnect the pressure relief valve outlet fitting.
3. Release the two screws and the retaining clip securing the pressure relief valve and pull out the valve.
4. Re-assemble in reverse order.
5. Refill and pressurise the system. (Refer to Commissioning, Section 5.1).

8.27 DHW HEAT EXCHANGER

1. Gain access behind the front casing and drain the boiler heating and hot water circuits as described in Sections 8.1 and 8.2.
2. Release the nut securing the condensate pipe and remove the flexible condensate pipe from the condensate trap. Rotate the pipe to clear.
3. Remove the diverter valve motor as described in Section 8.15.
4. Using a 4 mm Allen key unscrew the two socket head capscrews securing the DHW heat exchanger and withdraw the heat exchanger from the boiler, lifting it upwards and tip it forwards to remove.
   Note: Be careful not to allow water to drip onto any electrical components.
5. Re-assemble in reverse order making sure that the words on the heat exchanger are at the top when fitted and that the seals are in position in the manifold.
6. Refill and pressurise the system. (Refer to Commissioning, Section 5.1).

8.28 MAINS WATER INLET FILTER - Fig. 13

1. The mains water inlet filter is located in the body of the DHW flow switch. Refer to Section 8.15 to remove the flow switch.
2. The filter can be removed using a small screwdriver.
3. Clean the filter and re-assemble in reverse order.

8.29 DIVERTER VALVE ASSEMBLY - Figs. 30

1. Gain access behind the front casing and drain the boiler heating circuit as described in Sections 8.1 and 8.2.
2. Remove the diverter valve motor as described in Section 8.15.
3. Remove the heating flow pipe retaining clip from the diverter valve and undo the pipe connection at the heat exchanger. Rotate the pipe and lift upward to remove it from the diverter valve.
4. Remove the heating return pipe retaining clip from the pump housing and undo the pipe connection at the heat exchanger. Pull the pipe from the pump housing and remove.
5. Remove the DHW outlet pipe retaining clip from the diverter valve and undo the nut connecting the other end to the DHW temperature sensor housing and remove the pipe.
6. Using a 4 mm Allen key, undo the two cap head bolts securing the DHW heat exchanger and remove the heat exchanger.
7. Remove the heating flow valve from the bottom of the boiler and undo the return valve from its boiler connection.
8. Remove the four screws at the bottom of the boiler, either side of the flow and return connections and the two screw either side of the expansion relief pipe.
9. Remove the securing screws at the front top and bottom corners of the right hand side panel. This will provide some sideways movement to allow more room to release the valve.
10. Lift the assembly up slightly and pull the diverter valve to the right and off the automatic by-pass.
11. Re-assemble in reverse order using new seals and washers.
12. Refill and pressurise the system. (Refer to Commissioning, Section 5.1).

8.29 EXPANSION VESSEL

Note: If there is less than 450 mm clearance above the boiler or a rear exit flue is used, it is not possible to replace the vessel, in which case an additional vessel should be fitted external to the boiler in the central heating return pipe, as close to the boiler as possible (see Fig. 5).

1. Gain access behind the casing and drain the boiler heating circuit as described in Sections 8.1 and 8.2.
2. Disconnect the pipe from the pump inlet manifold and expansion vessel.
3. Remove the four screws securing the top support plate.
4. Lift the expansion vessel out of the boiler.
5. When replacing the vessel, ensure that the connection is towards the front of the boiler and re-assemble in reverse order using new seals as necessary.
6. Refill and pressurise the system. (Refer to Commissioning, Section 5.1).

8.30 CONDENSATE TRAP - Fig. 13

1. Gain access behind the front casing as described in Section 8.1.
2. Disconnect the top and drain connection of the condensate trap.
3. Place a container under the boiler and unscrew the bowl at the bottom of the trap, see Fig. 13. Some water will spill from the trap.
4. Remove the screw securing the trap to the bottom of the boiler casing and lift out the trap.
5. Fit the new trap in reverse order.

   Note: Fill the new trap with water once installed.

9 WIRING DIAGRAMS

9.1 HE25 and HE33 ILLUSTRATED WIRING DIAGRAM

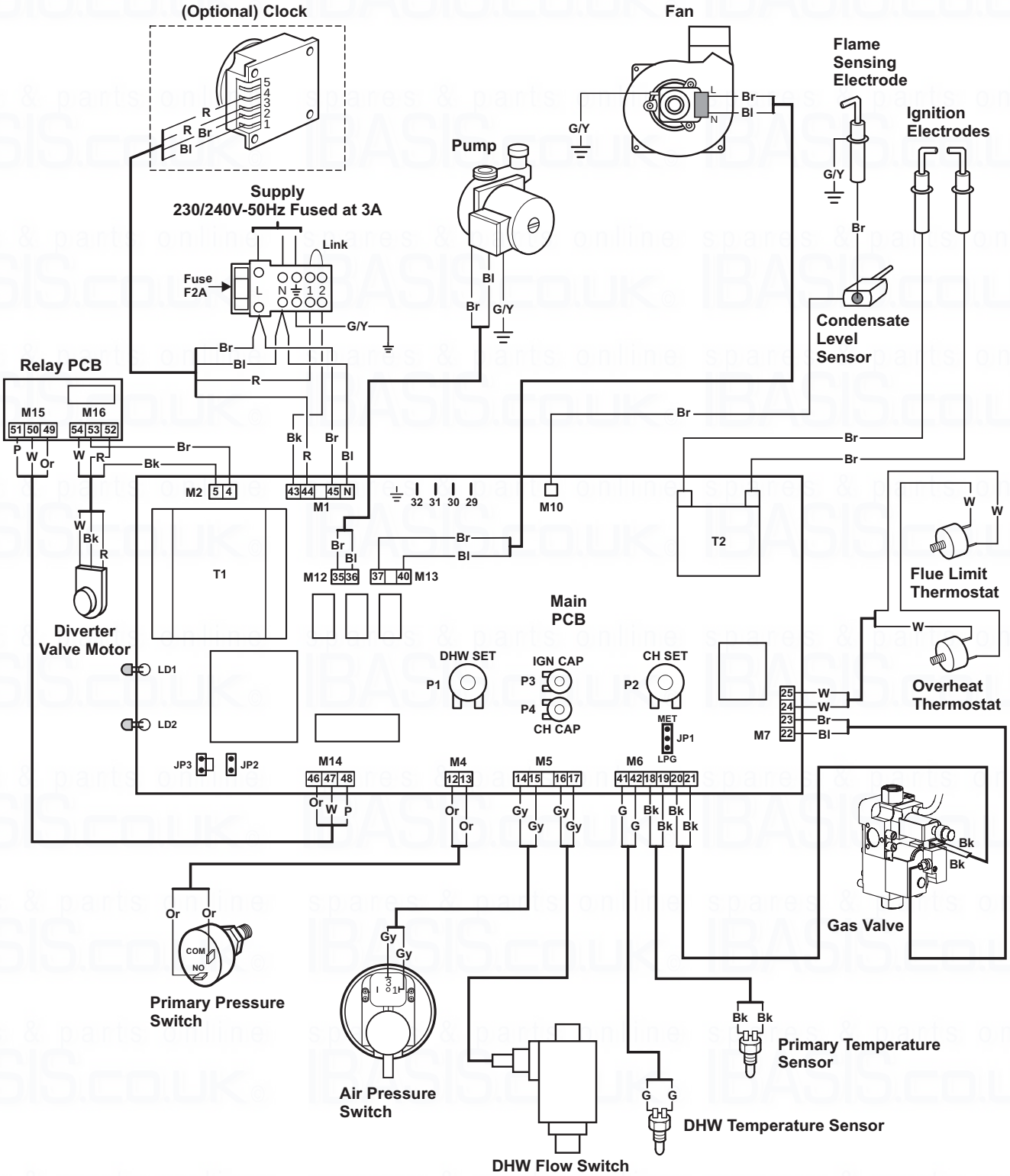

Br - Brown
Bk - Black
Bl - Blue
R - Red
Or - Orange
P - Purple
G - Green
G/Y - Green/Yellow
W - White
Gy - Grey

NOTE: TO CONNECT EXTERNAL CONTROL REMOVE LINK FROM TERMINALS 1 & 2 AND CONNECT 230/240 V SWITCHED LIVE TO TERMINAL1.

A FROST THERMOSTAT IS INCORPORATED WITHIN THE MAIN PCB

9.2 HE25 and HE33 FUNCTIONAL FLOW WIRING DIAGRAM

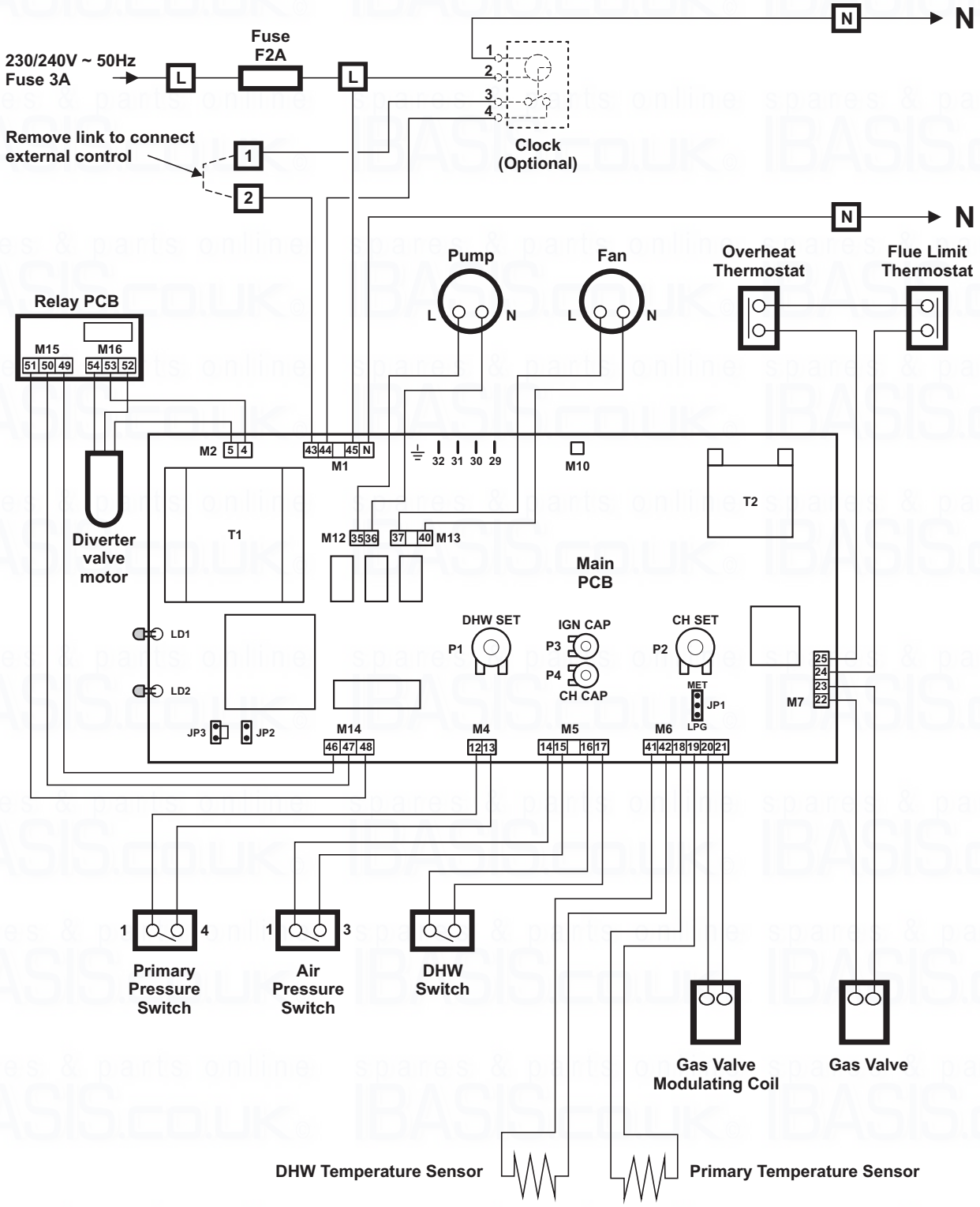

Note: ☐ Main Terminal Block

TO CONNECT EXTERNAL CONTROL REMOVE LINK FROM TERMINALS 1 AND 2 AND CONNECT 230/240 V SWITCHED LIVE TO TERMINAL 1.

10 FAULT FINDING

10.1 CARRY OUT INITIAL FAULT FINDING CHECKS

1. Check that gas, water and electrical supplies are available at the boiler.
   i.e. Inlet gas pressure = 20 mbar
   Electrical supply = 230/240 V ~ 50 Hz
   CH water system pressurised to between 0.75 and 1.25 bar
   DHW flow rate is more than 2.5 litre/min
2. Carry out electrical system checks, i.e. Earth Continuity, Resistance to Earth, Short Circuit and Polarity with a suitable meter.
   Note: These checks must be repeated after any servicing or fault finding.
3. Ensure all external controls are calling for heat and check all external and internal fuses.
4. Check that the gas and water pipework has been connected to the correct connections on the boiler and all valves are open.

However, before any servicing or replacement of parts ensure the gas and electrical supplies are isolated.

10.2 CENTRAL HEATING - Follow operational sequence

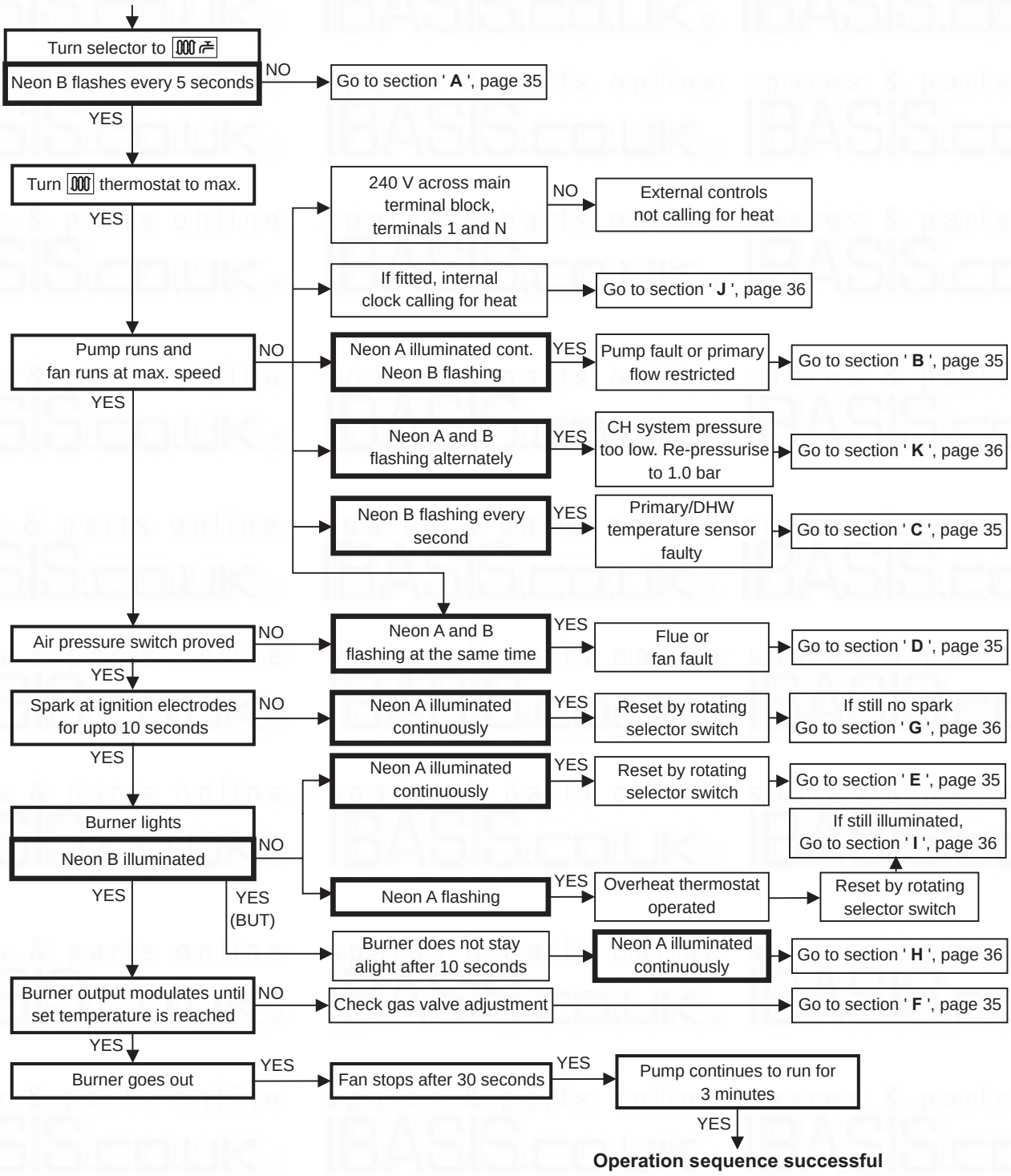

10.3 DOMESTIC HOT WATER - Follow operational sequence

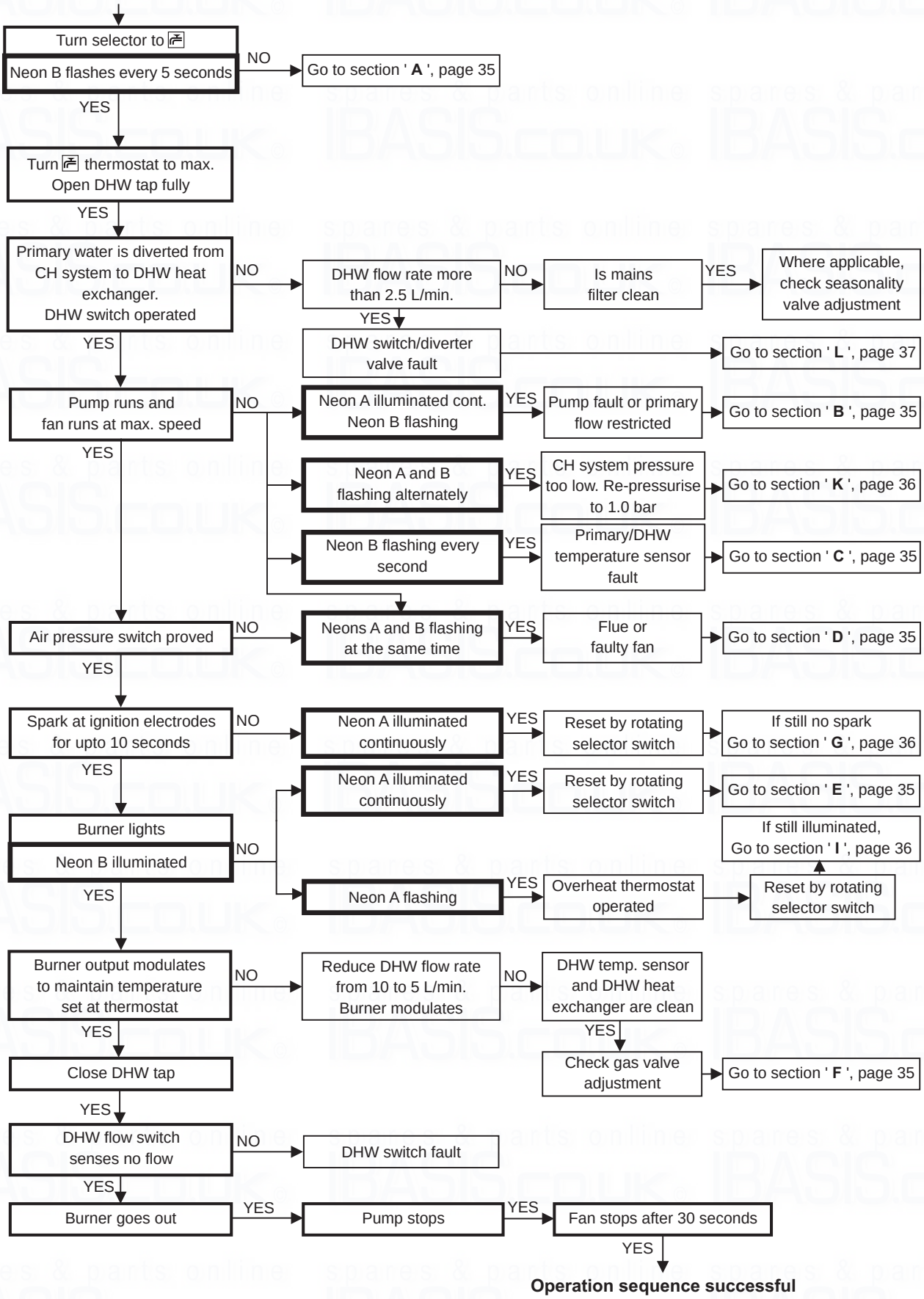

10.4 FAULT FINDING SOLUTIONS A to F

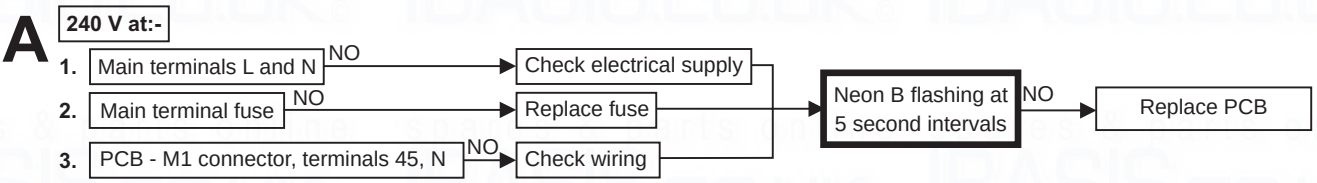

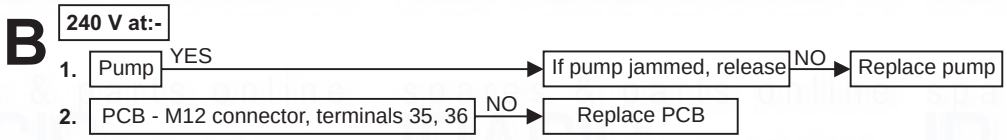

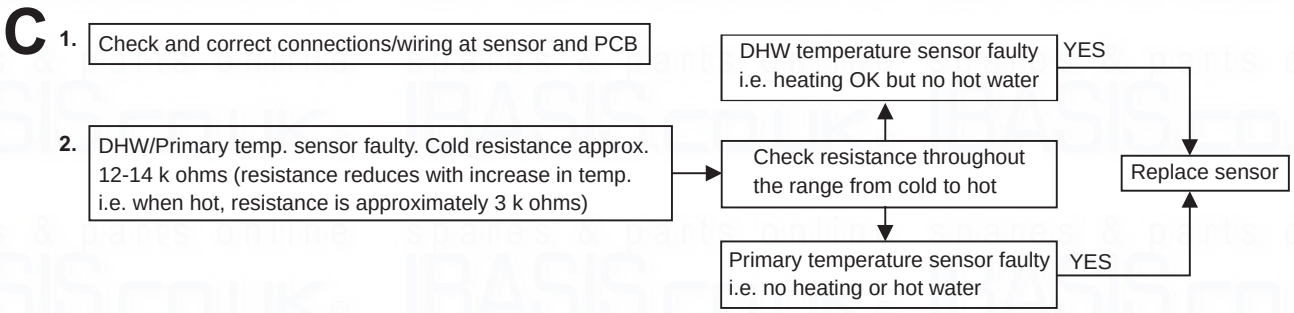

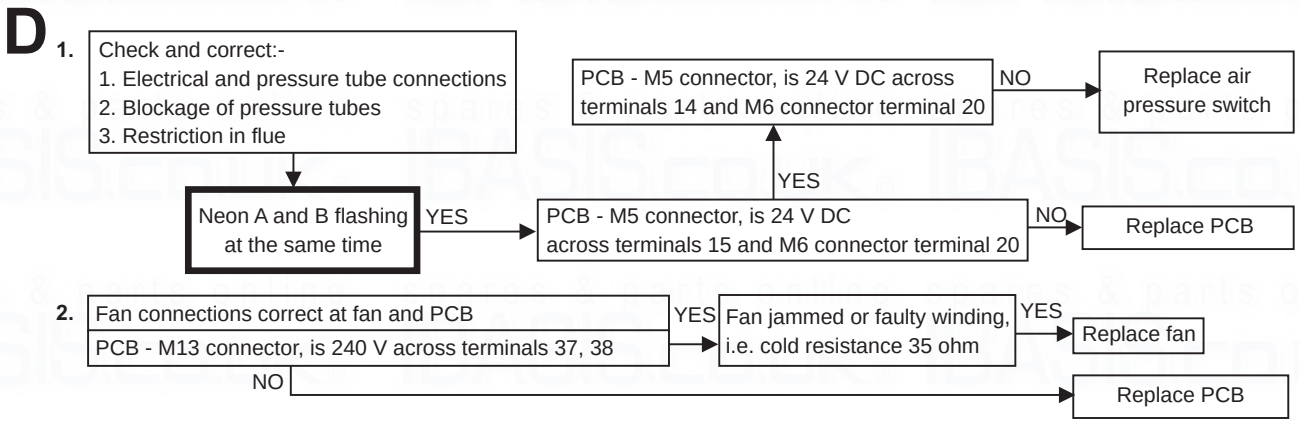

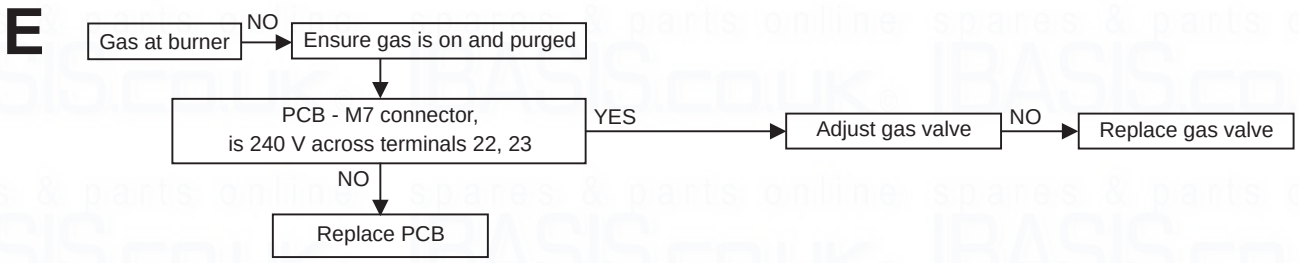

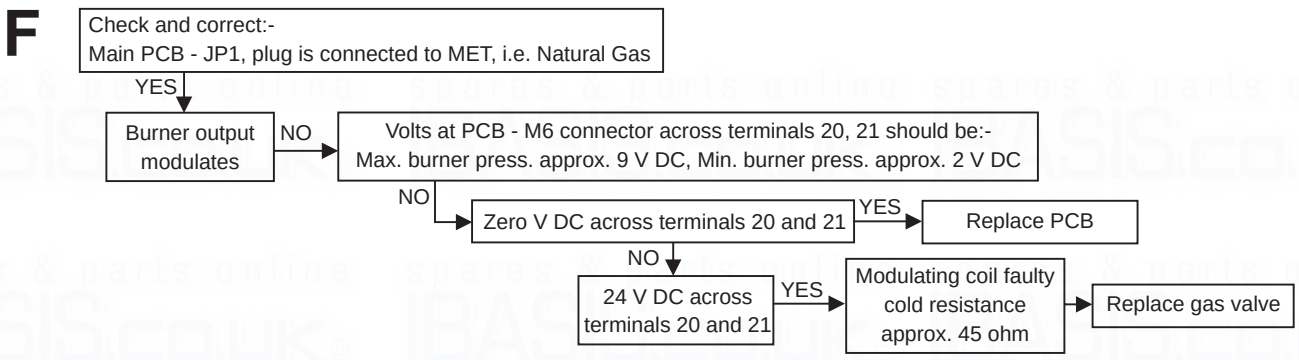

10.5 FAULT FINDING SOLUTION SECTIONS G to k

G

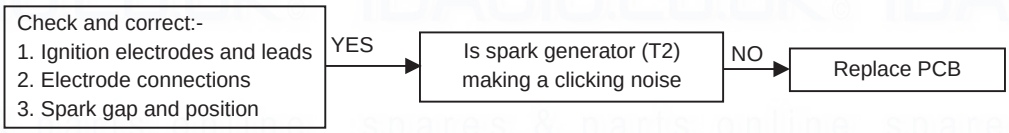

H

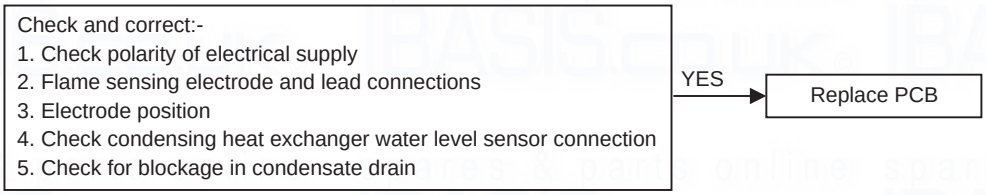

I

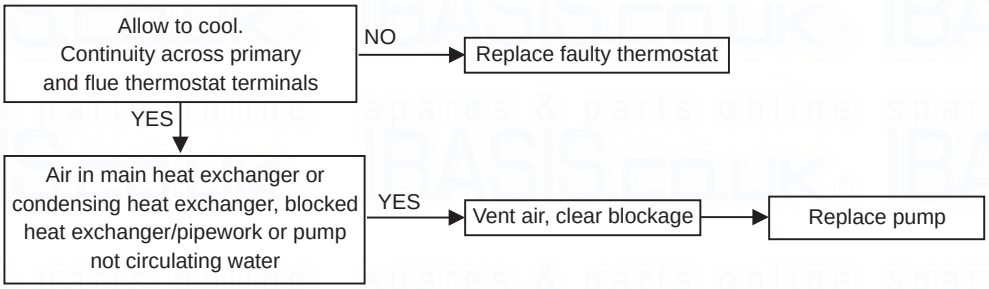

J

Single channel internal clock fitted

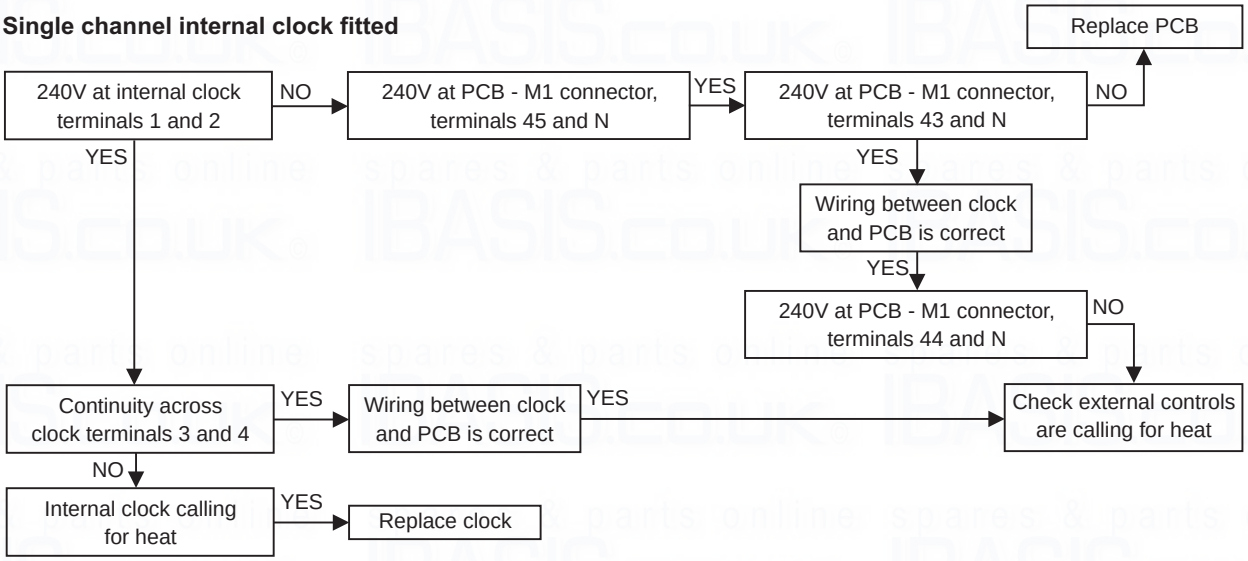

K

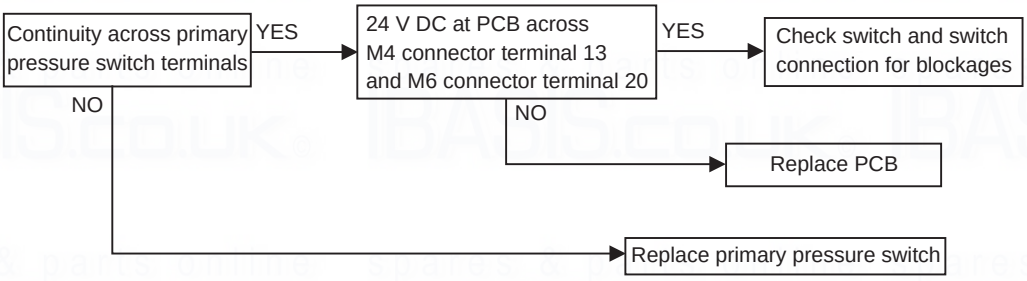

10.6 FAULT FINDING SOLUTION SECTION L

L

Continuity across DHW flow switch
- NO → Replace DHW switch
- YES ↓

24 V DC between PCB - M5 connector, terminal 16 and M6 connector, terminal 20
- NO → Replace PCB
- YES ↓

Main PCB:-
1. 230/240 Volts AC across M2 connector terminals 5 and 1
2. 24 Volts DC across M14 connector terminals 46 and 47 and terminals 46 and 48

- NO → Replace main PCB
- YES ↓

AC Volts across M2 main PCB connector terminal 5 and M16 diverter valve connector

Terminals	52	53	54
DHW demand	0 Volts	230 Volts	230 Volts
CH demand	230 Volts	230 Volts	0 Volts

- NO → Check all electrical connections are correct
  - YES → Replace diverter valve PCB
- YES → Replace diverter valve motor

11 SHORT PARTS LIST

Reference	Description	Qty.	Alpha Pt. No.	British Gas GC No.
Fig. 2, item 7	Burner assembly - HE25	1	1.019121	H28-376
Fig. 2, item 7	Burner assembly - HE33	1	1.020671	H28-377
	Main injector kit (15 x 1.30 mm injectors plus washers)	1	3.016466	H28-378
Fig. 2, item 30	Primary heat exchanger - HE25	1	1.021960	H28-379
Fig. 2, item 30	Primary heat exchanger - HE33	1	1.021743	H28-380
Fig. 2, item 6	DHW heat exchanger - HE25	1	1.022220	H50-451
Fig. 2, item 6	DHW heat exchanger - HE33	1	1.022222	H50-453
Fig. 26	Gas valve - Honeywell VK4105M5009	1	1.015803	E57-665
Fig. 30	Pump	1	1.024097	H50-455
Fig. 24	Fan assembly - HE25	1	1.021967	H28-381
Fig. 24	Fan assembly - HE33	1	1.021744	H28-382
Fig. 24	Air pressure switch	1	1.012849	E85-125
Fig. 30	Primary pressure switch	1	1.021715	H50-456
Fig. 30	DHW flow regulator (Blue) - HE25	1	1.020428	H55-241
Fig. 30	DHW flow regulator (Green) - HE33	1	1.020430	
Fig. 28	DHW flow switch	1	1.020831	H50-457
Fig. 27	PCB	1	1.025576	
Section 9.1	Relay PCB	1	1.015689	
Fig. 2, items 5,	Temperature sensor	2	1.015970	E76-317
Fig. 20	Fuse F2A	1	1.6098	E76-378
Fig. 24	Overheat thermostat (105°C)	1	1.019147	H28-384
Fig. 24	Flue limit thermostat (90°C)	1	1.021356	H28-385
Fig. 2, item 14	Expansion vessel 8 Litre	1	1.015394	E57-702
Fig. 30	Pressure relief valve 3 bar	1	1.011126	E57-703
Fig. 30	Automatic air vent	1	1.010771	E57-709
Fig. 29	Pressure gauge	1	1.016151	E57-710
Fig. 25	Ignition electrode - right	1	1.2408	E57-712
Fig. 25	Ignition electrode - left	1	1.2405	E57-713
Fig. 25	Flame sensing electrode	1	1.010645	E57-714
	Ignition electrode lead	2	3.013212	E65-195
	Flame sensing electrode/condensate sensor lead	1	3.016450	H28-386
Fig. 30	Diverter valve motor	1	1.018064	H50-469
Fig. 30	Diverter valve assembly	1	3.015562	H50-472
Fig. 2, item 27	By-pass assembly	1	3.017174	H50-474
	Combustion chamber insulation panel set - HE25	1	3.016448	H28-387
	Combustion chamber insulation panel set - HE33	1	3.016449	H28-388
Fig. 24	Condensing heat exchanger	1	3.015063	H28-389
Fig. 13	Condensate trap	1	3.017281	H50-476

12 benchmark CHECKLIST

Ensure the following is completed after the boiler has been installed and commissioned:-

BOILER SERIAL No. ..... NOTIFICATION No. .....

CONTROLS ***To comply with the Building Regulations, each section must have a tick in one or other of the boxes***

Time & temperature control to heating	room t/stat & programmer/timer	☐	Programmable roomstat	☐
Time & temperature control to hot water	cylinder t/stat & programmer/timer	☐	Combi boiler	☐
Heating zone valves	Fitted	☐	Not required	☐
Hot water zone valves	Fitted	☐	Not required	☐
Thermostatic radiator valves	Fitted	☐		
Automatic by-pass to system	Fitted	☐	Not required	☐

FOR ALL BOILERS CONFIRM THE FOLLOWING:

The system has been flushed in accordance with the boiler manufacturer's instructions? ☐ Yes ☐ No

The system cleaner used .....

The inhibitor used .....

FOR CENTRAL HEATING MODE, MEASURE AND RECORD THE FOLLOWING:

Gas rate	☐	m^3/hr	☐	ft^3/hr
Burner operating pressure (if applicable)	☐	N/A	☐	mbar
Central heating flow temperature			☐	°C
Central heating return temperature			☐	°C

FOR COMBINATION BOILERS ONLY

Has a water scale reducer been fitted? ☐ Yes ☐ No

What type of scale reducer has been fitted? .....

FOR DOMESTIC HOT WATER MODE, MEASURE AND RECORD THE FOLLOWING:

Gas rate	☐	m^3/hr	☐	ft^3/hr
Maximum burner operating pressure (if applicable)	☐	N/A	☐	mbar
Cold water inlet temperature			☐	°C
Hot water outlet temperature			☐	°C
Water flow rate			☐	lts/min

FOR CONDENSING BOILERS ONLY CONFIRM THE FOLLOWING:

The condensate drain has been installed in accordance with the manufacturer's instructions? ☐ Yes

FOR ALL INSTALLATIONS CONFIRM THE FOLLOWING:

The heating and hot water system complies with current Building Regulations ☐ Yes

The appliance and associated equipment has been installed and commissioned in accordance with the manufacturer's instructions ☐ Yes

If required by the manufacturer, have you recorded a CO/CO_2 ratio reading ☐ N/A ☐ Yes ☐ CO/CO_2 ratio

The operation of the appliance and system controls have been demonstrated to the customer ☐ Yes

The manufacturer's literature has been left with the customer ☐ Yes

COMMISSIONING ENG'S NAME:

Print ..... CORGI ID No. .....

Sign ..... Date .....

13 SERVICE RECORD

It is recommended that your heating system is serviced regularly and that you complete the appropriate Service Interval Record below.

Service Provider: Before cpmpleting the appropriate Service Interval Record below, please ensure you have carried out the service as described in this instruction manual. Always use the manufacturer's specified spare parts when replacing all controls.

SERVICE 1: Date .....
Engineers Name .....
Company Name .....
Telephone No. .....
CORGI ID card serial No. .....
Comments .....
.....
Signature .....

SERVICE 2: Date .....
Engineers Name .....
Company Name .....
Telephone No. .....
CORGI ID card serial No. .....
Comments .....
.....
Signature .....

SERVICE 3: Date .....
Engineers Name .....
Company Name .....
Telephone No. .....
CORGI ID card serial No. .....
Comments .....
.....
Signature .....

SERVICE 4: Date .....
Engineers Name .....
Company Name .....
Telephone No. .....
CORGI ID card serial No. .....
Comments .....
.....
Signature .....

SERVICE 5: Date .....
Engineers Name .....
Company Name .....
Telephone No. .....
CORGI ID card serial No. .....
Comments .....
.....
Signature .....

SERVICE 6: Date .....
Engineers Name .....
Company Name .....
Telephone No. .....
CORGI ID card serial No. .....
Comments .....
.....
Signature .....

SERVICE 7: Date .....
Engineers Name .....
Company Name .....
Telephone No. .....
CORGI ID card serial No. .....
Comments .....
.....
Signature .....

SERVICE 8: Date .....
Engineers Name .....
Company Name .....
Telephone No. .....
CORGI ID card serial No. .....
Comments .....
.....
Signature .....

SERVICE 9: Date .....
Engineers Name .....
Company Name .....
Telephone No. .....
CORGI ID card serial No. .....
Comments .....
.....
Signature .....

SERVICE 10: Date .....
Engineers Name .....
Company Name .....
Telephone No. .....
CORGI ID card serial No. .....
Comments .....
.....
Signature .....

Alpha
HEATING INNOVATION

Alpha Therm Limited.
Nepicar House, London Road, Wrotham Heath,
Sevenoaks, Kent TN15 7RS
Tel: 0870 3001964

email: info@alphatherm.co.uk
website: www.alpha-innovation.co.uk

These instructions have been carefully prepared but we reserve the right to alter the specification at any time in the interest of product improvement.
© Alpha Therm Limited 2008.

Part No. 1.026216
Rev.15.025733/000
03/08/D219

Manual compiled and designed by Publications 2000 - Tel: (01670) 356211