Installation and Servicing Instructions

Alpha SolarSmart 90

Pre-Heat Drain Back Solar System and Wall Mounted Unvented Hot Water Solar Cylinder for use with an Alpha Combination Boiler

For Technical help or for Service call ...
ALPHA HELPLINE Tel: 08448718764
website:www.alpha-innovation.co.uk

Alpha
HEATING INNOVATION

Nepicar House, London Road,
Wrotham Heath, Sevenoaks,
Kent TN15 7RS

CE

Building Regulations Approved
Certificate No. ETC11206

WRAS APPROVED PRODUCT

DIN Geprüft

SOLAR Key Mark Certificated

NFRC
THE NATIONAL FEDERATION OF ROOFING CONTRACTORS LIMITED

Leave these instructions with the User

CONTENTS

1 Introduction 2
2 Technical data 3
3 General information 6
4 Installation 12
5 Commissioning 18
6 System operation 20
7 Routine inspection 22
8 Component replacement 22
9 Wiring diagram 24
10 Diagnostics and fault codes 25
11 Checklist for unvented storage 26
12 Parts list 27
13 Inspection history 28

1 INTRODUCTION

The Alpha SolarSmart 90 system is a pre-heat drain back solar collector system which includes a wall mounted 90 litre unvented cylinder to store water heated by the solar collector. The system **must be** used in conjunction with an Alpha combination boiler fitted with the Alpha Solar valve which is supplied with the system.

The SolarSmart 90 system consists of a 90 litre cylinder, a 2.5 m² flat plate drain back solar collector, drain back unit, unvented kit and solar valve. The 90 litre unvented cylinder is fitted with a pump, control box and temperature sensors. The drain back unit is fitted with a heat exchanger and pump.

The unvented kit **must be** fitted in the mains water supply to the cylinder. The kit includes a pressure reducing valve, expansion vessel, expansion relief valve, check valve and a tundish. The solar valve **must be** fitted directly to the mains water inlet of the Alpha combination boiler.

Note: In the northern hemisphere solar collectors should ideally face South. For more information see Section 3.6.

The solar collector is supplied in special packaging to protect it during transit. The four corners are protected with EPS (polystyrene) caps and the exposed edges are protected with cardboard. The glass front and aluminium back panel are exposed. The packaging is not intended to support the full lift weight of the collector.

When manually carrying the collector, always hold the exposed edges and not the packaging alone. The collector can be lifted both horizontally and vertically.

The collector can only be carried using the lifting forks when on the original wooden pallet base.

IMPORTANT

This System has been approved to the Building Regulations for unvented hot water storage systems and the Local Authority must be notified of the intention to install. Therefore the installation must be carried out by a person competent to install unvented hot water systems.

The installation must be carried out in accordance with the following recommendations:-

All current Building Regulations issued by the Department of the Environment, i.e. Approved Document L1

Building Standards (Scotland) (Consolidation) Regulations issued by the Scottish Development Department

UK Water Regulations/Byelaws (Scotland)

Health & Safety Document No. 635 (The Electricity At Work Regulations 1989)

The installation should also be in accordance with the following British Standard Codes of Practice:-

BS 5449:1990	Forced circulation hot water systems
BS 5546:2000	Installation of hot water supplies for domestic purposes
BS 5918:1989	Solar heating systems for domestic hot water
BS 6700:2006	Design, installation, testing and maintenance of services supplying water

Failure to install this appliance correctly could lead to prosecution and will invalidate the guarantee. It is in your own interest and that of safety to ensure that the law is complied with.

Manufacturer's instructions must **NOT** be taken in anyway as over-riding statutory obligations.

This appliance meets the requirements of IPX4D, i.e. degree of protection against moisture.

Reference should be made to Criteria for gas fired combination boilers used as after heaters in solar thermal systems and BRE Solar heating UK:1981.

Lightning Protection

Refer to BS6651 for lightning protection, however this does not give specific requirements for solar panels and generally collectors mounted on non-metallic roof structures will not require lightning protection.

Advice should be sought if mounting on metallic roof structures or mounting in situations where the risk of strikes are high.

2 TECHNICAL DATA

2.1 DHW SYSTEM

Solar Cylinder			
Max. Hot Water Working Pressure		5.5 bar	
Max. Mains Inlet Pressure (inlet of pressure reducing valve)		12 bar	
Min. Mains Water Pressure		0.1 bar	
Mains Inlet Connection		15 mm	
DHW Outlet Connection		15 mm	
DHW Cylinder Capacity		91 L	
Expansion Vessel Size (pre-charge press.)		8 L at 2.5 bar	
Pressure Reducing Valve Setting		2.5 bar	
Temperature and Pressure Relief Valve		90°C/7 bar	
Expansion Relief Valve Setting		6 bar	
Flow Rate	L/min	Max.18.0	Min. 1.0
	gal/min	Max. 4.0	Min. 0.22
Max. Outlet Water Temp. (Approx.)	°C	Max. 70	Min. 5
	°F	Max. 158	Min. 41

Reference to WRC-NSF Test Procedure 1.50.220 using a 30 kW boiler. Time to reheat water store by 55°C - 25 minutes. Reheat time for 70% of store - 18 minutes

Drain Back Unit (DBU)	
DHW Circuit:	
Flow Connection	15 mm
Return Connection	15 mm
Max. Working Pressure	8 bar
Heat Exchanger Coil Content	0.32 L
Collector Circuit:	
Flow Connection	15 mm
Return Connection	12 mm
Max. Working Pressure	6 bar
Vessel Size	3.6 L
Max. Filled Content	2.8 L
Heat Transfer Capacity	110 W/K

Note: Copper pipe MUST be used between the cylinder, drain back unit and collector.

2.2 SOLAR COLLECTOR SYSTEM

Type:		Portrait	Landscape
Dimensions			
Total Surface Area	m²	2.5	
Aperture Area	m²	2.26	
Length x Width x Thickness	mm	2230 x 1120 x 92	1120 x 2230 x 92
Water Content	L	1.16	1.10
Lift Weight	kg	45 Gross - 44 Nett	
Profile of collector when fitted using an Alpha flashing kit protrudes approximately 30 mm to 60 mm above the tiles (depends upon type of tile used)			
Hydraulics			
Maximum Pressure	bar	8	
Absorber			
Aluminium Cover and Copper Pipe (Length x Width x Depth)	mm	2140 x 1030 x 0.5	1030 x 2140 x 0.5
Spectral Selective Layer			
Absorption Coefficient	%	95	
Emission f	%	5	
Glass			
Transparent, Hardened - Thickness	mm	4	
Collector Housing			
Material		Aluminium Pressing	
Insulation			
Thickness	mm	50	
Thermal conduction coefficient	W/mk	0.037	
Cover Frame			
Material		Aluminium Black Powder Coated	
Temperature Sensor			
Type - NTC	Ohm	10 k	
Connections			
Pre-mounted Flexible Hoses Return to DBU	mm	12 mm	
Flow from DBU	mm	15 mm	
Roof Slope		20° Min (90° Max)	30° Min (90° Max)
Energy Performance (System with 90L tank)		3.5 GJ/yr (972.2 kWh/yr)	
Zero Loss Collector Efficiency (No)		80%	
Collector Heat Loss Coefficient (a1)	W/m²k	3.175	
Aperture to Gross Collector Area Ratio		0.9	
Collector Pressure Drop		@80 l/h - 9 kPa	
Max. Wind and Snow Load			
Pitched roof		Same as Supporting Roof Structure	
Flat roof		Wind Speed 27 m/s - Snow Load 1.9 kN/m²	

2.3 INSTALLATION

Solar Cylinder Min. Clearances for Servicing	Top	100 mm
	Bottom	300 mm
	Sides	10 mm
	Front	450 mm
DBU Min. Clearances for Servicing	Top	100 mm
	Bottom	100 mm
	Side	10 mm
	Front	450 mm
Lift Weight - Cylinder Assembly		22 kg
Lift Weight DBU		6 kg
Weight Full and Operational - Cylinder Assemby		113 kg
Weight Full and Operational - DBU		8.8 kg

2.4 ELECTRICAL

Supply		230/240 V ~ 50 Hz
External Fuse		3 A
Power Consumption	Max.	165 W
	Min.	5 W

2.5 GENERAL

Solar Cylinder Dimensions	Height	1110 mm
	Width	540 mm
	Depth	530 mm
DBU Dimensions	Height	460 mm
	Width	365 mm
	Depth	270 mm
Solar Cylinder - Material		Stainless Steel
DBU Heat Exchanger - Material		Copper
Covers/Insulation Material		EPP Foam
Solar Cylinder Insulation Thickness		50 mm
Standing Energy Loss of Solar Cylinder		0.92 kWh/24hr 0.43 W/litre
Global Warming Potential		Zero
Ozone Depletion Potential		Zero
Insulation Blowing Agent		Steam (Water)

2.6 LOCATION

Max. Height Between Top of Solar Collector and Bottom of DBU (see Note below)	3 m
Max. Distance Between DBU and Bottom of Solar Cylinder	6 m

Note: Whenever possible, always fit the DBU to the flexible hoses from the solar collector. If this is not possible, do not use more than 2 m of 15 mm copper pipe (with compression fittings) for each of the flow and return between the DBU and collector.

2.7 ELECTRICAL CONNECTIONS

Notes: This Appliance Must Be Earthed. Do Not Connect Any Other Controls.

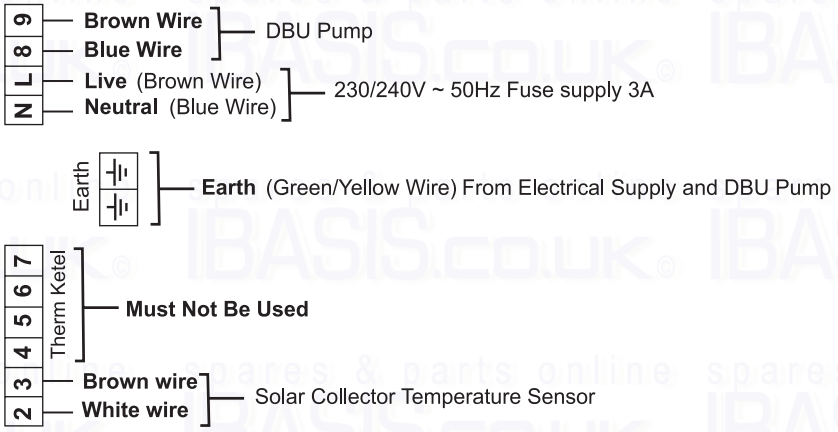

Fig. 1

2.8 SOLAR SYSTEM SCHEMATIC

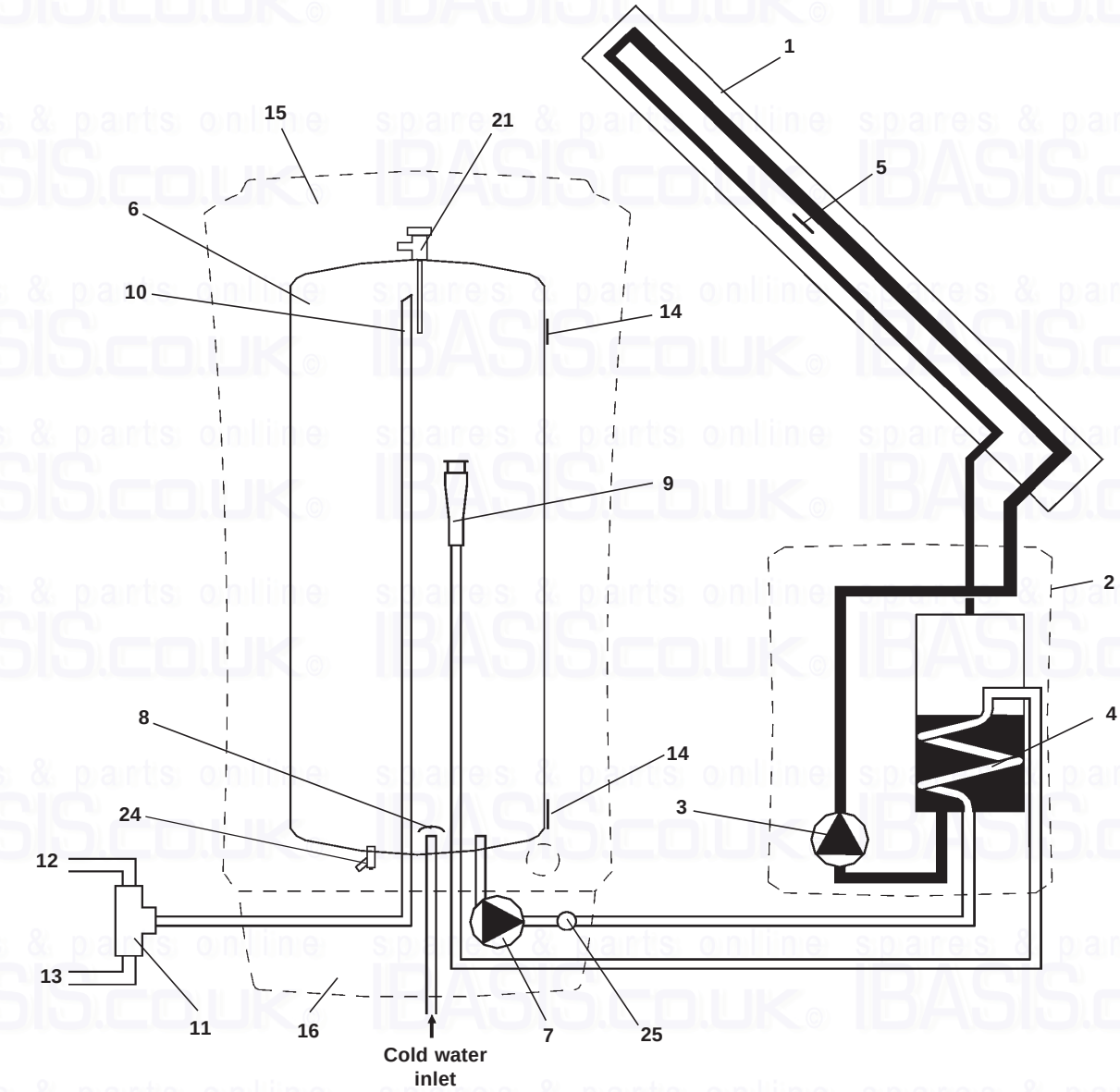

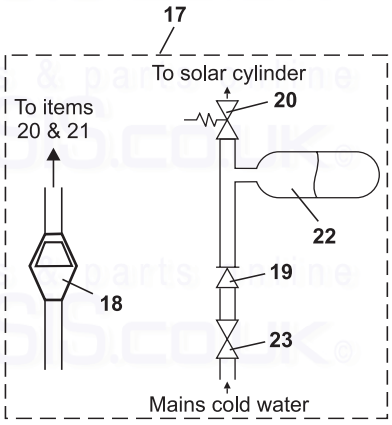

1	Solar collector	13	Flow to tap
2	Drain back unit (DBU)	14	Temperature sensors
3	DBU pump	15	Insulation/casing
4	DBU heat exchanger	16	Bottom tray
5	Collector temperature sensor	17	Unvented kit
6	Solar cylinder	18	Tundish
7	Solar cylinder pump	19	Non-return valve
8	Filter	20	Expansion relief valve
9	Diffuser	21	Temperature and pressure relief valve
10	DHW outlet pipe	22	Expansion vessel
11	Solar valve	23	Pressure reducing valve with filter
12	Flow to boiler	24	Drain point for cylinder
		25	Overheat thermostat

Fig. 2

3 GENERAL INFORMATION

3.1 ELECTRICAL SUPPLY

The Solar system requires a 230/240 V ~ 50 Hz mains supply, fused at 3 A - **The system must be earthed.**

There must only be one common isolator, providing complete electrical isolation, for the Solar system.

This system has been fitted with a supply cable, however, if it is necessary to fit a cable use PVC insulated cable not less than 0.75 mm² (24 x 0.2 mm) to BS 6500 Table 16. The system should be connected to a fused three pin plug and unswitched shuttered socket outlet (both complying with BS 1363), or a fused double pole switch with a contact separation of at least 3 mm in both poles.

Note: There is no electrical connections between the boiler and the Solar system. Therefore, it is recommended that the Solar system electrical isolation is completely separate to the boiler and any external controls isolation.

All wiring must be in accordance with the current IEE Wiring Regulations (BS 7671).

3.2 DOMESTIC HOT WATER SYSTEM

The mains water supply must be first connected to the components detailed in Section 3.3 before the Solar cylinder. No valves must be fitted between these components and the cylinder. The incoming mains water pressure to the cylinder is regulated to 2.5 bar by the pressure reducing valve supplied in the unvented package. However, all taps and mixing valves used with the hot water system must be suitable for operating at a pressure of up to 8 bar.

The Solar valve, supplied in the unvented package, must always be fitted directly to the cold water inlet of an Alpha combination boiler.

Note: The hot water control thermostat on the combination boiler **must always** be turned to maximum.

To ensure economic use, the pipe runs to the Alpha combination boiler and taps should be in 15 mm copper pipe and be as short as possible. Where possible the pipework should be insulated to reduce heat loss.

Before the mains water supply pipe is connected to the boiler, it should be thoroughly flushed out to avoid the danger of dirt or foreign matter entering the boiler and the filter incorporated within the pressure reducing valve cleaned.

The stored water temperature is controlled to a maximum of 70°C.

To prevent high temperatures at the hot water taps, it is recommended that a thermostatically controlled mixing valve is fitted after the boiler.

3.3 UNVENTED HOT WATER STORAGE SYSTEM

To comply with the Building Regulations for unvented hot water storage, it is required that the unvented kit components detailed in Fig. 3 are fitted before the mains cold water inlet to the Solar cylinder. No isolating valves must be fitted between these components and the cylinder.

All these components are supplied with the Solar system in a separate package and must be fitted by a competant person in accordance with the instructions.

The installation is subject to Building Regulations approval and the Local Authority must be notified of the intention to install.

Discharge pipe - The discharge pipes from the temperature/pressure and expansion relief valves must be routed to the tundish supplied and in 15 mm pipe. The discharge pipework from both relief valves may be joined together in the same sized pipe, providing at least 22 mm pipework is connected downstream of the tundish.

Tundish - The tundish must be positioned within 500 mm of the appliance, so that it is visible to the User and away from electrical devices. The minimum size of the discharge pipe downstream of the tundish is given in the following table.

The discharge pipework from the tundish:-

Sizing of copper discharge pipe 'D2' - refer also to Fig. 4A and 4B				
Valve outlet size	Minimum size of discharge pipe 'D1' to tundish	Minimum size of discharge pipe 'D2' from tundish	Maximum resistance allowed, expressed as a length of straight pipe (i.e. no elbows or bends)	Resistance created by each elbow or bend
G½	15 mm	22 mm	up to 9 m	0.8 m
		28 mm	up to 18 m	1.0 m
		35 mm	up to 27 m	1.4 m

1. Shall fall continuously through its length.
2. Shall be of a heat resistant material, e.g. metal.
3. Shall not be fitted with any valves or taps.
4. Shall discharge to a safe visible position, e.g. into a gulley.
5. Shall have a minimum of 300 mm straight pipework directly from the tundish.

Note: Where children may play or otherwise come into contact with discharges, a wire cage or similar guard must be positioned to prevent contact whilst maintaining visibility.

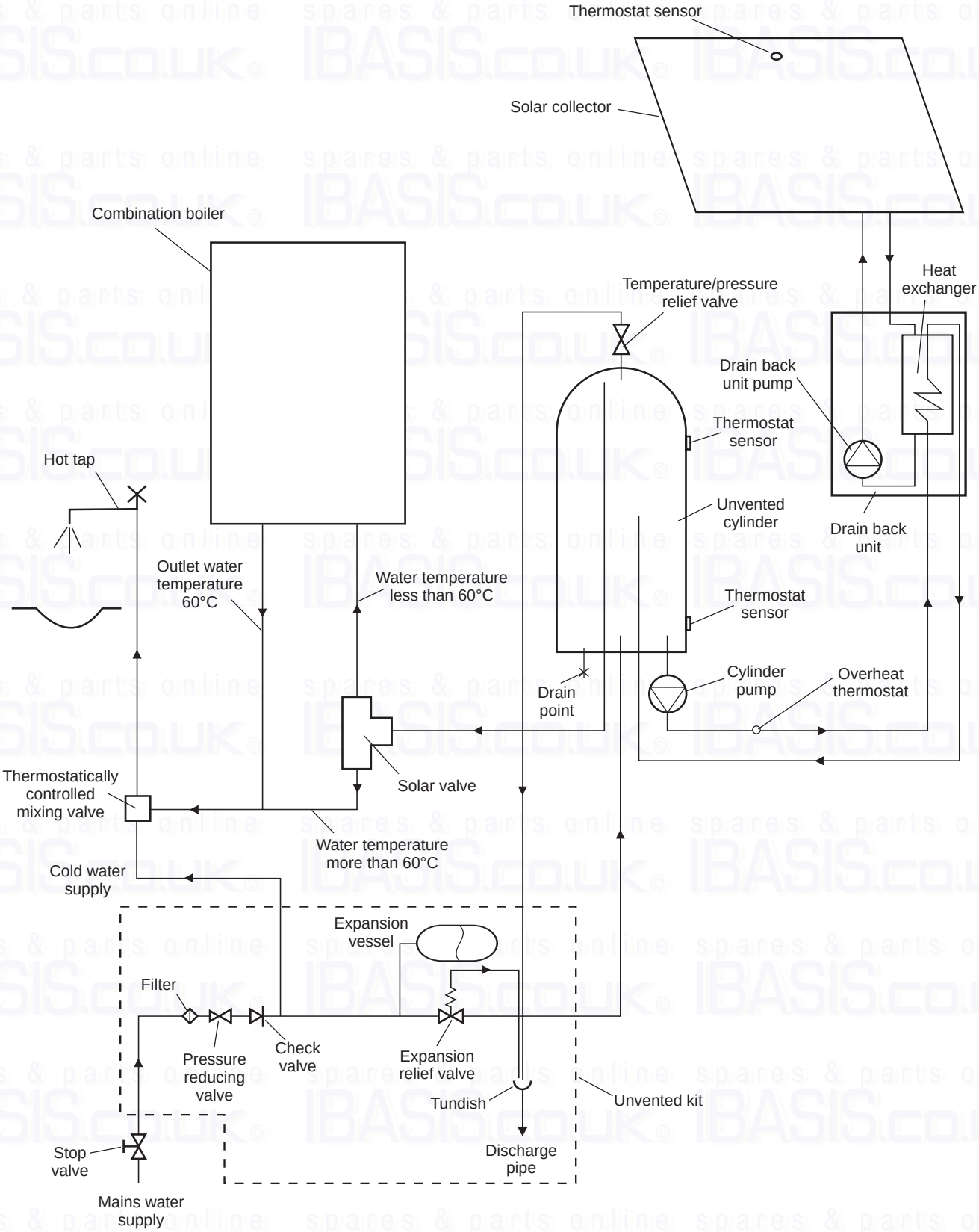
Thermostat sensor
Solar collector
Combination boiler
Heat exchanger
Temperature/pressure relief valve
Drain back unit pump
Thermostat sensor
Hot tap
Unvented cylinder
Drain back unit
Outlet water temperature 60°C
Water temperature less than 60°C
Thermostat sensor
Drain point
Cylinder pump
Overheat thermostat
Solar valve
Thermostatically controlled mixing valve
Water temperature more than 60°C
Cold water supply
Expansion vessel
Filter
Pressure reducing valve
Check valve
Expansion relief valve
Tundish
Unvented kit
Stop valve
Discharge pipe
Mains water supply

Fig. 3

Given below are suggested methods of terminating the discharge pipe safely.

Where a single pipe serves a number of discharges, such as in blocks of flats, the number served should be limited to not more than 6 systems so that any installation can be traced reasonably easily. The single common discharge pipe should be at least one pipe size larger than the largest individual discharge pipe to be connected.

If the system is installed where discharges from safety devices may not be apparent, i.e. in dwellings occupied by blind, infirm or disabled people, consideration should be given to the installation of an electronically operated device to warn when discharge takes place.

a. Low level termination

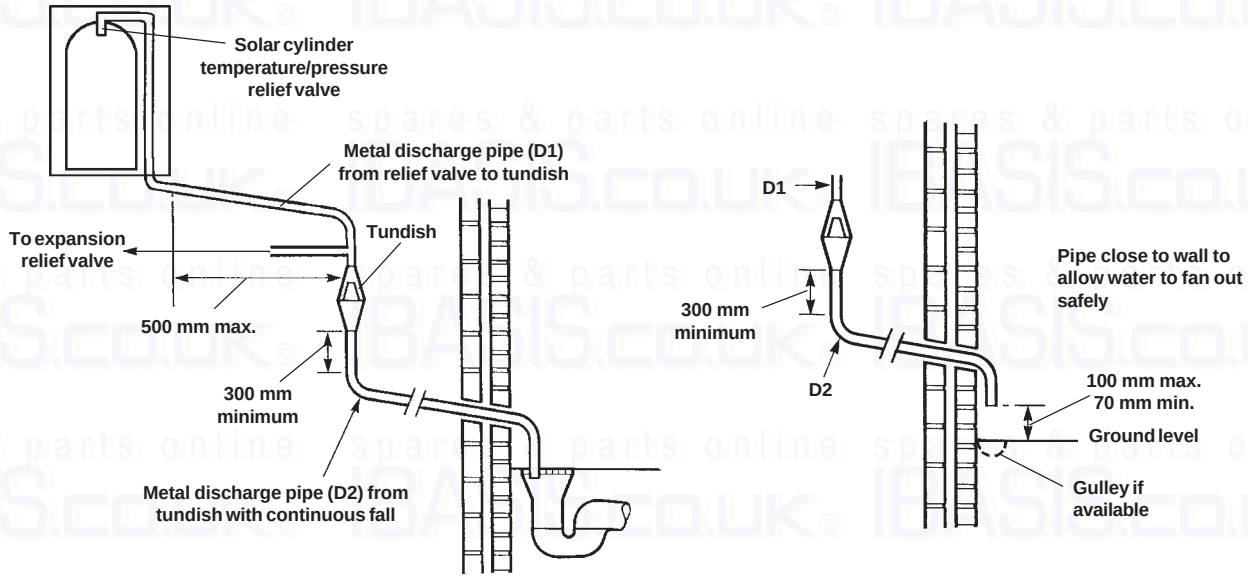

Fig. 4a

b. High level termination

At high level, discharge onto a roof is acceptable providing the roof is capable of withstanding high temperatures and there is a distance of 3 m from any plastic guttering systems that would collect such discharge.

Note: The discharge will consist of scalding water and steam. Asphalt, roofing felt and non-metallic rainwater goods may be damaged by such discharges.

c. Termination into a hopper

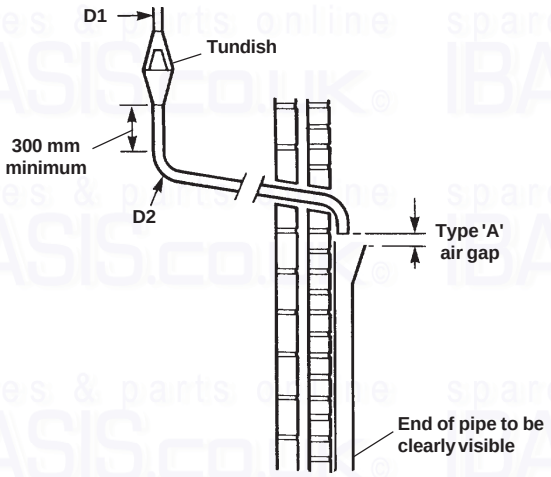

Worked example:-

The example below is for a G½ temperature relief valve with a discharge pipe (D2) having four elbows and a length of 7 m from the tundish to the point of discharge.

From the table on page 6:-

Maximum resistance allowed for a straight length of 22 mm copper discharge pipe (D2) from a G½ temperature relief valve is 9 m.

Subtract the resistance for four 22 mm elbows of 0.8 m each = 3.2 m.

Therefore the maximum permitted length equates to 9 - 3.2 = 5.8 m

5.8 m is less than the actual length of 7 m therefore calculate the next largest size.

Maximum resistance allowed for a straight length of 28 mm pipe (D2) from a G½ temperature relief valve equates to 18 m.

Subtract the resistance for four 28 mm elbows at 1.0 m each = 4 m.

Therefore the maximum permitted length equates to 18 - 4 = 14 m

As the actual length is 7 m, a 28 mm (D2) copper pipe will be satisfactory.

Fig. 4b

3.4 SOLAR CYLINDER INFORMATION - Figs. 5a and 5b

Positioning

The Solar cylinder must be installed on a flat vertical wall which is capable of supporting the weight of the cylinder when full (113 kg).

The cylinder may be installed in any room or internal space, although particular attention is drawn to the requirements of the current IEE Wiring (BS7671) Regulations, and in Scotland, the electrical provisions of the Building Regulations applicable in Scotland, with respect to the installation of the cylinder in a room or internal space containing a bath or shower. When the cylinder is installed in a room containing a bath or shower, it must not be possible for a person using the bath or shower to touch any electrical switch or cylinder control utilising mains electricity.

The bottom of the Solar cylinder must be located within 6 metres of the top of the Solar collector and of the drain back unit.

Dimensions

The dimensions of the cylinder and clearances required for servicing are shown in Fig. 5a.

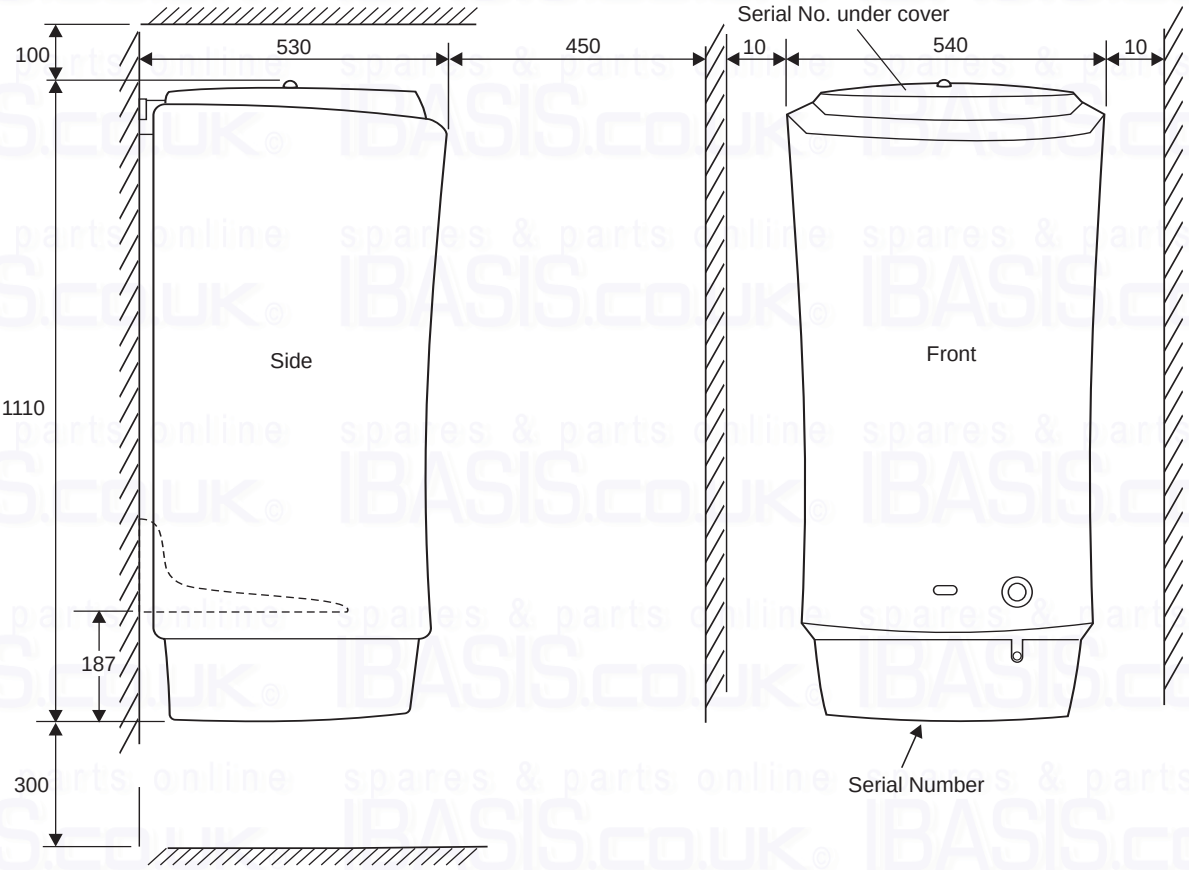

Fig. 5a

Water connections

The connections at the bottom of the cylinder are shown in Fig. 5b.

Note: Use compression fittings only on the cylinder connections. Use a minimum of 1 metre of copper pipe from the cylinder for the domestic water inlet and outlet connections.

Cylinder Connections

A	Water outlet to boiler	15 mm
B	Cold water inlet	15 mm
C	Return from DBU	15 mm
D	Flow from cylinder to DBU	15 mm

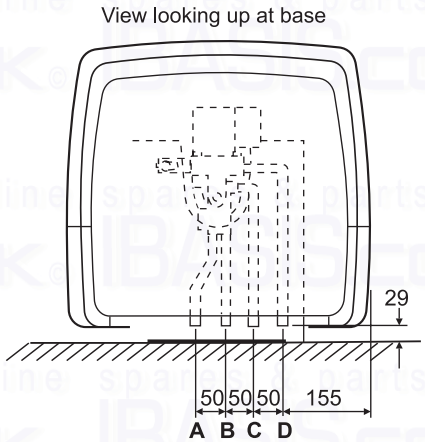

Fig. 5b

3.5 DRAIN BACK UNIT (DBU) INFORMATION - Fig. 6

Positioning

The DBU must be located within a height of 3 metres of the top of the Solar collector, see Fig. 8. The pipework from the collector to the DBU **must always** fall by a minimum of 40 mm per metre and **must be** insulated with high temperature pipe insulation.

Dimensions

The dimensions of the DBU and clearances required for servicing are shown in Fig. 6.

Water connections

The connections at the top and bottom of the DBU are shown in Fig. 6.

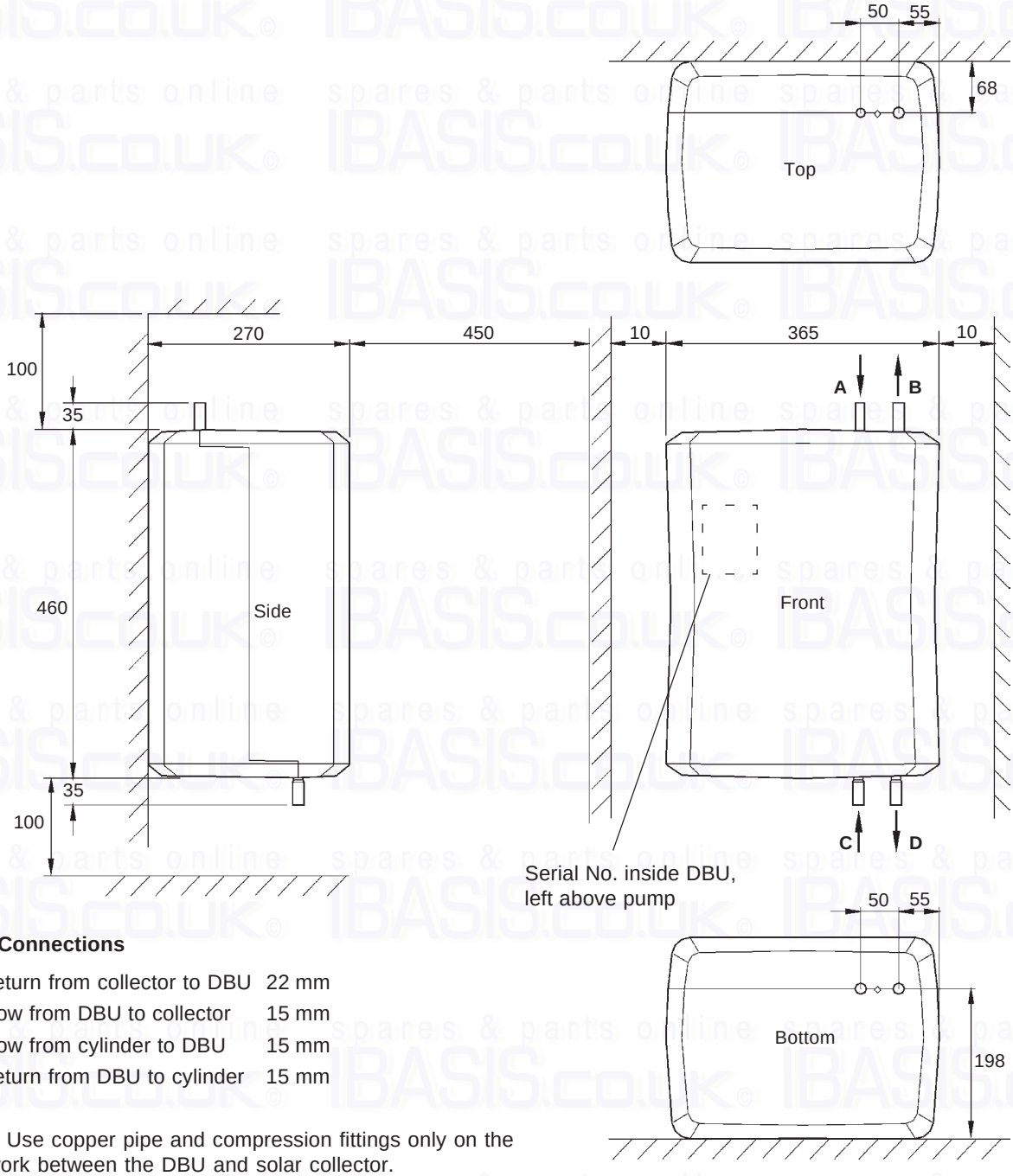

DBU Connections

A	Return from collector to DBU	22 mm
B	Flow from DBU to collector	15 mm
C	Flow from cylinder to DBU	15 mm
D	Return from DBU to cylinder	15 mm

Note: Use copper pipe and compression fittings only on the pipework between the DBU and solar collector.

Fig. 6

3.6 SOLAR COLLECTOR INFORMATION - Fig. 7

The solar energy supplied by a system varies with the orientation and tilt of the collector, which will usually be determined by the existing roof. However, the predicted variation is slight. For a collector facing anywhere between SE and SW and tilted upto 60° from the horizontal, the annual solar energy supplied will be at least 90% of that obtained at the optimum collector position.

It should be remembered that shading from trees, buildings etc., can produce a significant decrease in system performance, and collectors should be positioned to minimise shading from the sun in the middle of the day.

The solar collector can be installed using one of the following methods:

a. **Integration of the collector into the tiles of a pitched roof:** Using the Alpha Flashing Kit (Part No. 6.4000750 portrait or Part No. 6.4000650 landscape), landscape or portrait collectors can be integrated into the structure of a pitched roof as shown in Fig. 7. The roof must have an inclination of more than 20° and the tiles used with the flashing kit must be suitable to ensure that the installation is weatherproof. Full details of this type of installation are provided in the instructions supplied with the kit.

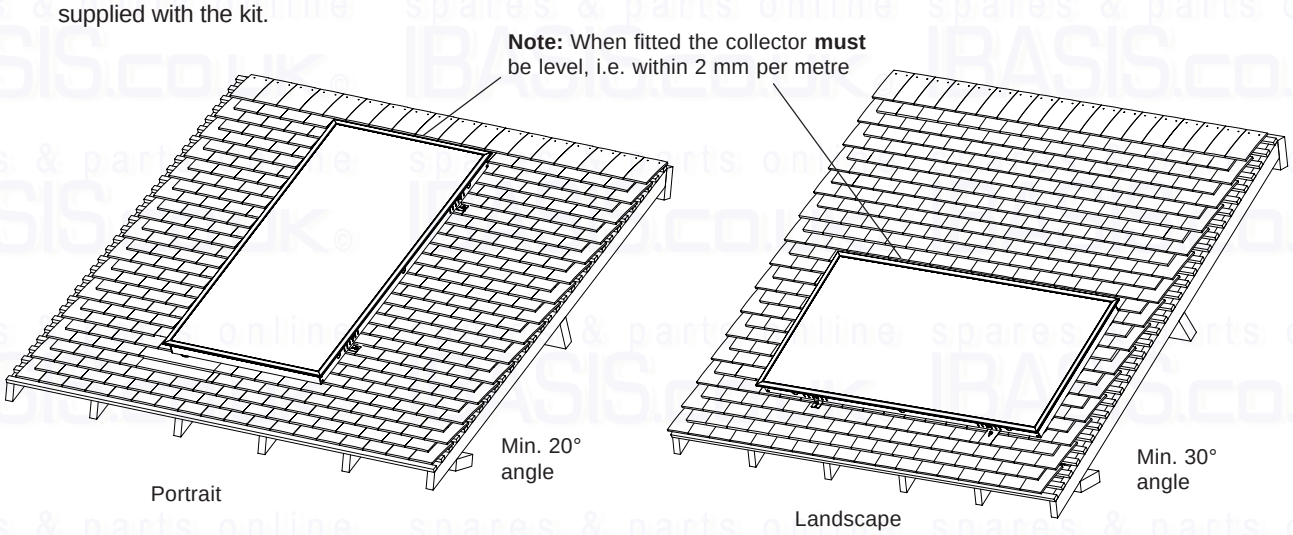

Fig. 7

b. **Positioning of a landscape collector onto a flat roof:** Using the Alpha Flat Roof Kit (Part No. 6.4000800), the collector is mounted on the framework supplied. The collector is fixed at an inclination of 30° and ballast is used to secure the frame in the required position. Refer to Fig. 8 for details of location of the drain back unit in relation to the collector. Full details of this type of installation are provided in the instructions supplied with the kit.

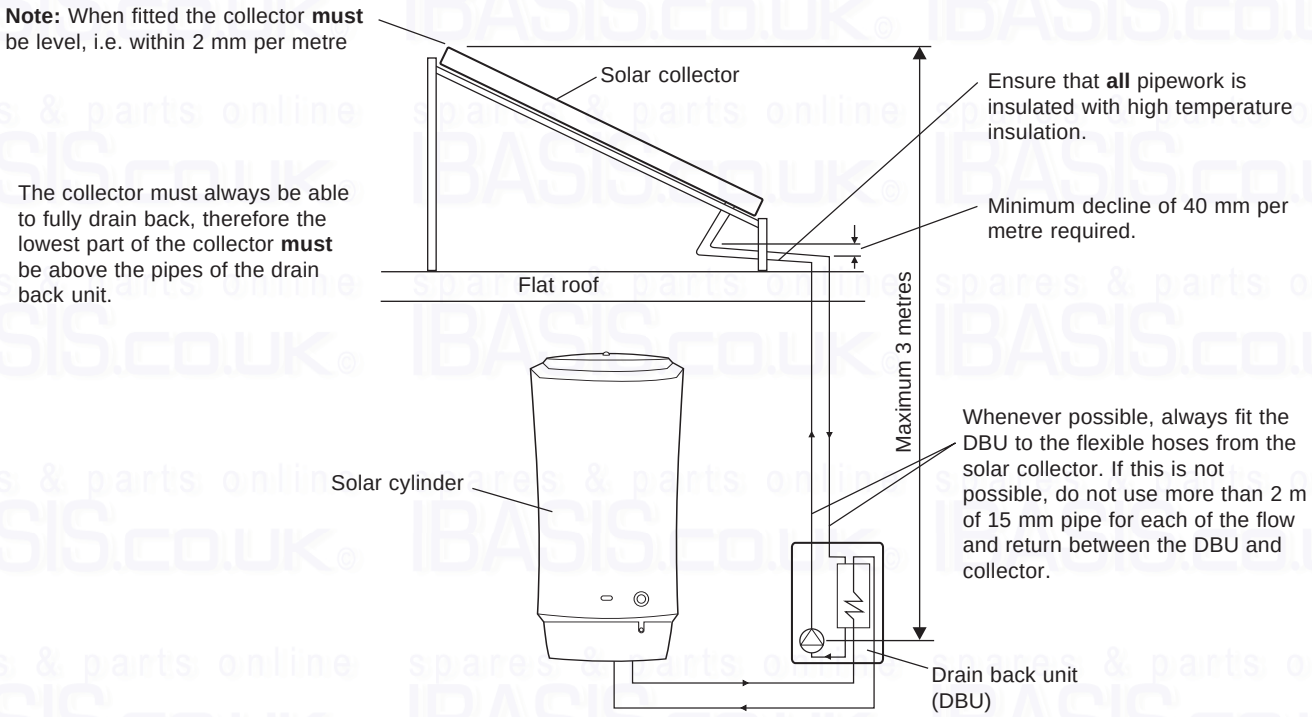

Fig. 8

4 INSTALLATION

4.1 UNPACKING

The SolarSmart 90 system is supplied in three boxes as follows:

Box 1 - Solar cylinder

Contents:

- Solar cylinder
- Inlet pipework assembly
- Temperature/pressure relief valve with discharge pipe
- Casing and insulation
- Cylinder pump
- Control box
- Top cover
- Bottom cover
- Wall mounting brackets
- Screw pack
- Fitting instructions

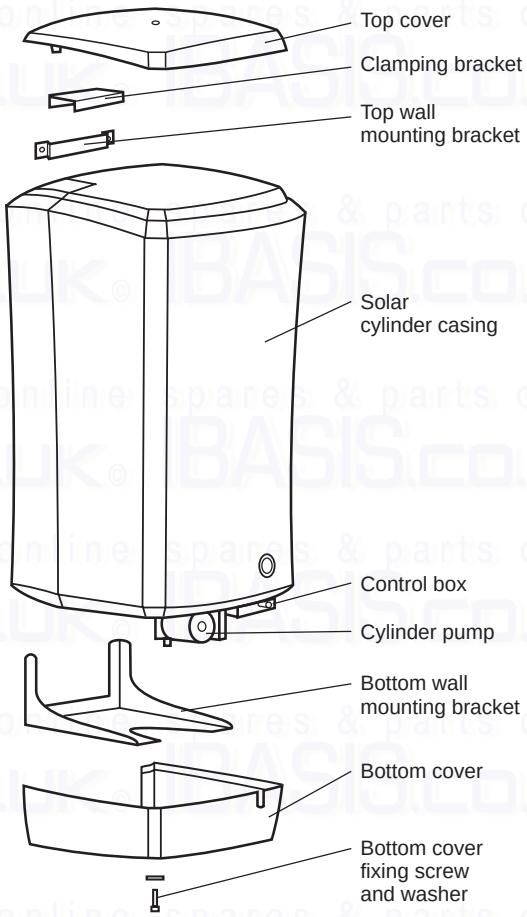

Fig. 9

Box 2 - Drain back unit

Contents:

- Mounting board
- Drain back vessel
- Housing and drain back unit pump (with 7 metre cable)
- Screw pack
- Cable set for collector temperature sensor
- Pipe fittings for drain back unit/collector
- Pipe insulation

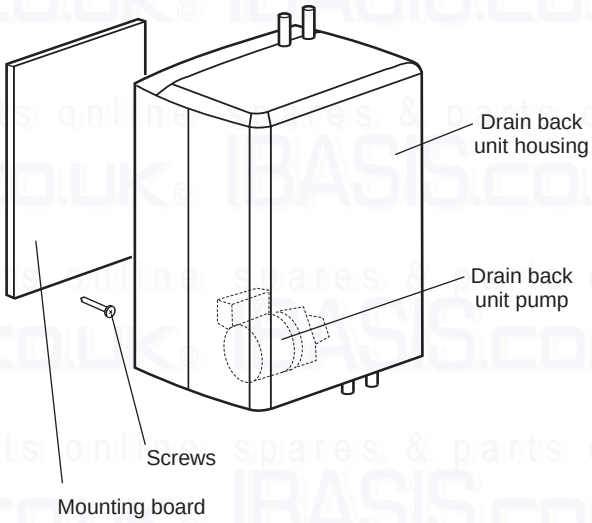

Fig. 10

Box 3 - Unvented kit and Solar valve

Contents:

- 2.5 bar pressure reducing valve
- 8 litre expansion vessel, pre charged to 2.5 bar
- Expansion vessel mounting bracket
- Tundish
- 6 bar expansion relief valve/check valve
- Solar valve kit
- Fitting instructions

The following items are also required to complete the installation:

1. Solar collector - Landscape or Portrait
2. Solar collector mounting kit - a. Pitched roof collector flashing kit - landscape (Part No. 6.4000650) or portrait (Part No. 6.4000750).
   or b. Flat roof collector mounting kit, landscape only (Part No. 6.4000800).

3. Alpha combination boiler and flue.
4. Thermostatic mixing valve.
5. High temperature 15 mm pipe insulation (150°C plus).

4.2 LOCATION and CLEARANCE REQUIRED

Refer to Section 3.4, 3.5 and 3.6 before locating the solar cylinder, drain back unit and solar collector.

4.3 INSTALL THE COLLECTOR

Refer to installation instructions supplied with the Solar collector mounting kit to install the collector.

4.4 FIT THE SOLAR CYLINDER - Figs. 11a, 11b and 11c

The cylinder must be installed on a flat vertical wall which is capable of supporting the weight of the full cylinder (see Section 2.3). The cylinder should be secured to the wall using the mounting brackets supplied.

Note: If the positions of **all** the fixing holes for the brackets cannot be made into solid brickwork, then the use of two rails, from the floor to the ceiling, is recommended (e.g. Flamco rails) with the mounting brackets fixed to them.

1. Decide on the position of the cylinder, taking into consideration the clearances and the maximum allowed distances from the drain back unit and collector. Refer to Section 2.6.
2. Using the template supplied, mark the positions of the fixing holes. Drill the holes approximately 60 mm deep using a 10 mm dia. drill. **All the holes must be into solid brickwork.**
3. Plug the holes and secure the top and bottom mounting brackets to the wall, using the plugs and screws supplied.
4. Position the cylinder onto the bottom bracket ensuring the sides of the bracket (B) are located into the grooves in the cylinder (A), see Fig. 11b. Carefully slide the cylinder towards the wall, making sure that the plastic pins at the bottom of the cylinder are fully located over the bottom bracket.

   Note: Ensure that the cylinder is positioned squarely on the bottom bracket before pushing it back towards the wall.

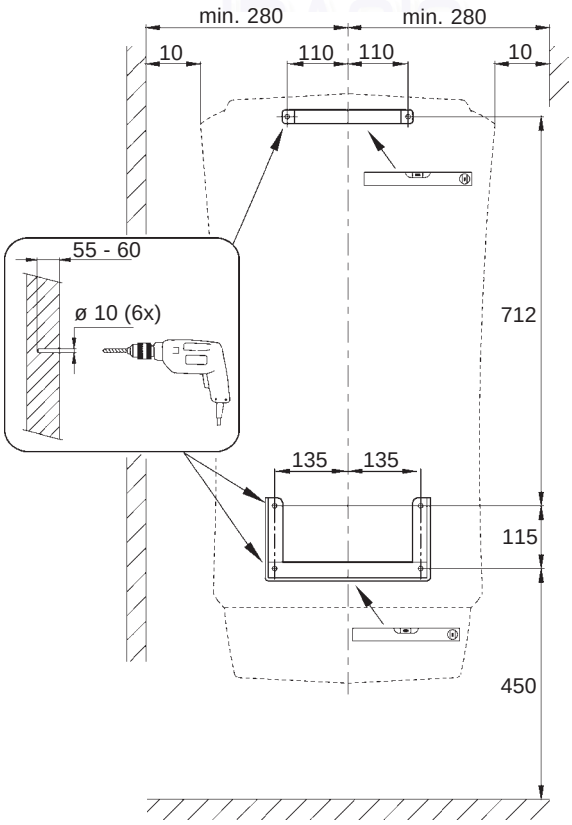

Fig. 11a

5. Secure the top of the cylinder to the top mounting bracket using closing bracket as shown in Fig. 11c.

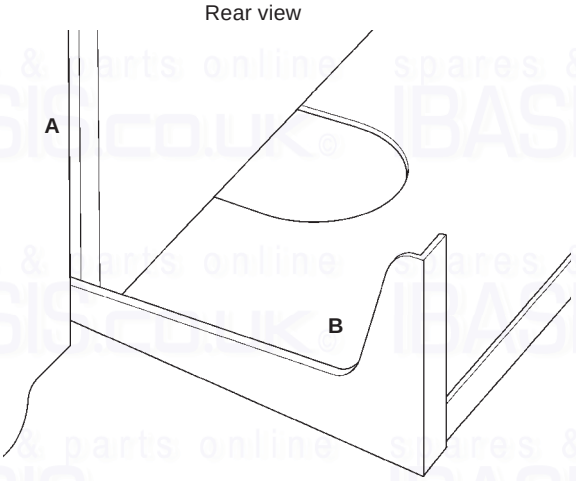

Fig. 11b

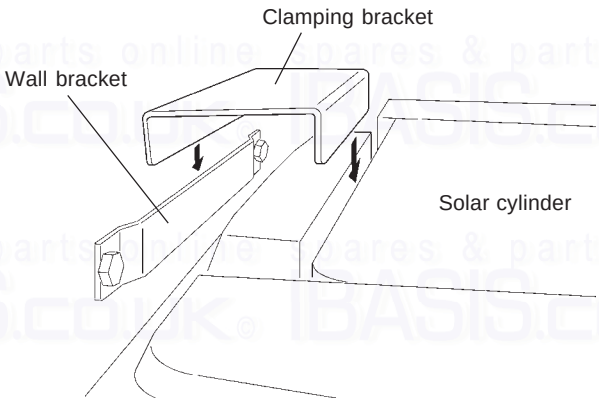

Fig. 11c

4.5 FIT THE DRAIN BACK UNIT (DBU) - Figs. 12a and 12b

The DBU may be installed to the inclined roof structure or on a flat vertical wall, which is capable of supporting the weight of the full DBU (see Section 2.3). The DBU should be secured in position using the fixings supplied. If the strength of the surface on which the unit is to be fitted is unknown, the wooden mounting board, supplied, should be used as shown in Fig. 12a.

To fit the DBU on an inclined roof - see Fig. 12a

1. With the help of Fig. 12a and Section 2.6, decide upon the position of the unit, taking into account the clearances required around the unit and the distance between the break-through hole of the collector tubing and the DBU pipes that have to be connected.
   Note: Whenever possible, always fit the DBU to the flexible hoses from the solar collector. If this is not possible, do not use more than 2 m of 15 mm pipe for each of the flow and return between the DBU and collector.
2. If the DBU is used with an existing collector panel, loosely connect the collector tubing to the DBU pipes. This will help to determine the position of the DBU to achieve the minimum 40 mm per metre downward slope of the collector tubing.

   If the collector has not yet been fitted, ensure that there is 200 - 250 mm between the centre of the break-through hole and the upper side of the DBU. See Fig. 12a.
3. Remove the front cover of the DBU (pull off away from the unit).
4. Secure the unit to the roof using the screws and washers supplied, then replace the front cover.

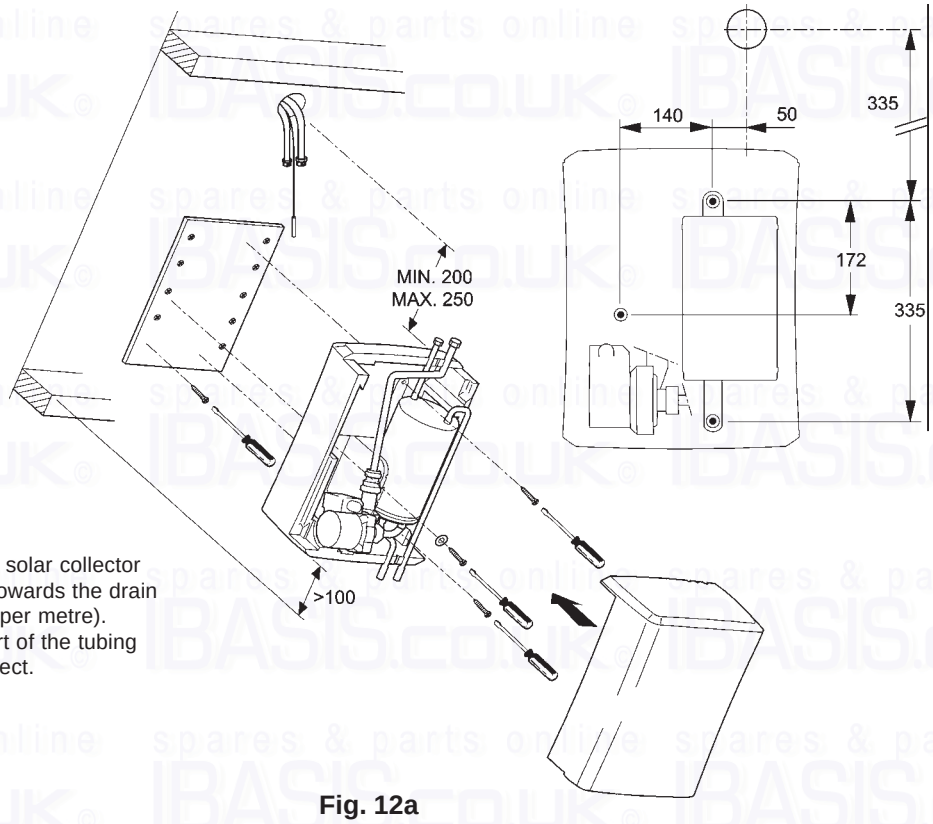

Note: The tubing from the solar collector must always slope down towards the drain back unit (at least 40 mm per metre). There must not be any part of the tubing that will allow water to collect.

Fig. 12a

To fit the DBU on wall - see Fig. 12b

1. With the help of Fig. 12b, decide upon the position of the unit, taking into account the clearances required around the unit.
2. Remove the front cover of the DBU (pull off away from the unit).
3. Mark the position of the three fixing holes. Drill the holes approximately 40 mm deep using a 6 mm dia. drill.
4. Plug the holes and secure the unit to the wall, using the plugs and screws supplied.
5. Replace the DBU front cover.

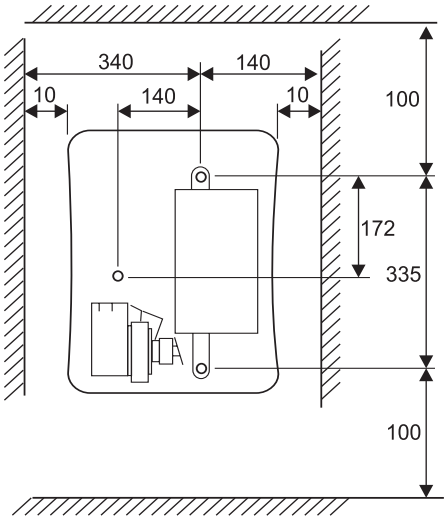

Fig. 12b

4.6 FIT THE UNVENTED KIT - Fig. 13

1. Unpack Box 3 and check the contents.
2. Locate the expansion vessel mounting bracket in a suitable position as close to the solar cylinder as possible and secure in postion using the srews and wall plugs supplied.
   Note: Ensure there is enough space to fit/remove the cylinder bottom cover.
3. Secure the expansion vessel to the mounting bracket using the metal band, nut, washers and bolt.
   Note: Ensure the pressure in the expansion vessel is 2.5 bar. If it is not, adjust the pressure to give 2.5 bar.
4. Connect the expansion relief valve to the expansion vessel as shown in Fig. 13.
   Notes: a. The plug must be removed from the capped connection on the expansion vessel relief valve to enable connection to the expansion vessel.
   b. Mount the valve in either the horizontal or vertical orientation. An inverted orientation may allow debris deposits onto the valve seating and cause the valve to malfunction.
   c. Ensure the valve is mounted correctly, i.e. the arrow marking on the valve body is pointing in the direction of flow.
5. Connect the mains water supply to the pressure reducing valve and thoroughly flush out the water pipework.
   Refer to Domestic Hot Water System, Sections 3.2 and 3.3.

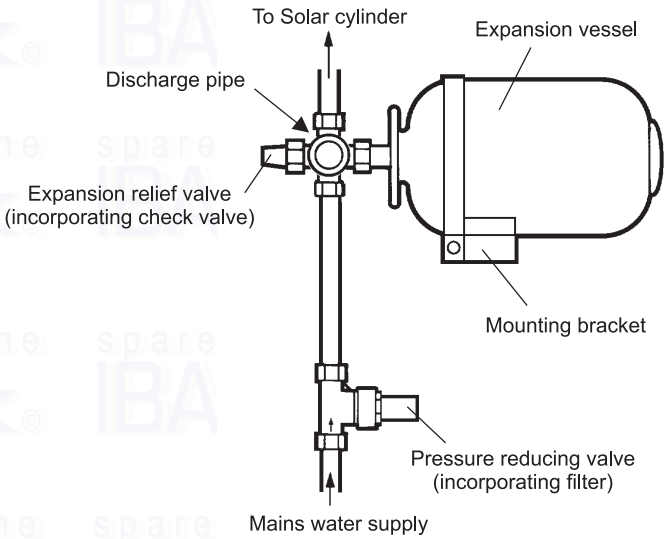

Fig. 13

4.7 FIT THE BOILER AND THE SOLAR VALVE

1. Only an Alpha combination boiler may be used with the SolarSmart 90 system. Install the boiler as described in the instructions supplied with the boiler.
2. Connect the solar valve directly to the boiler cold water inlet connection, then connect the pipework to the solar valve as shown in Figs. 14 and 15.
   Notes: a. If the valve is being fitted to an existing boiler installation, the mains water inlet must be re-routed to the inlet of the solar cylinder's unvented kit.
   b. Ensure that the hot water outlets 'B' and 'D' (Fig. 15) are connected together after the leaving the boiler.
   c. It is recommended that a thermostatic mixing valve is fitted in the hot water outlet before the taps.

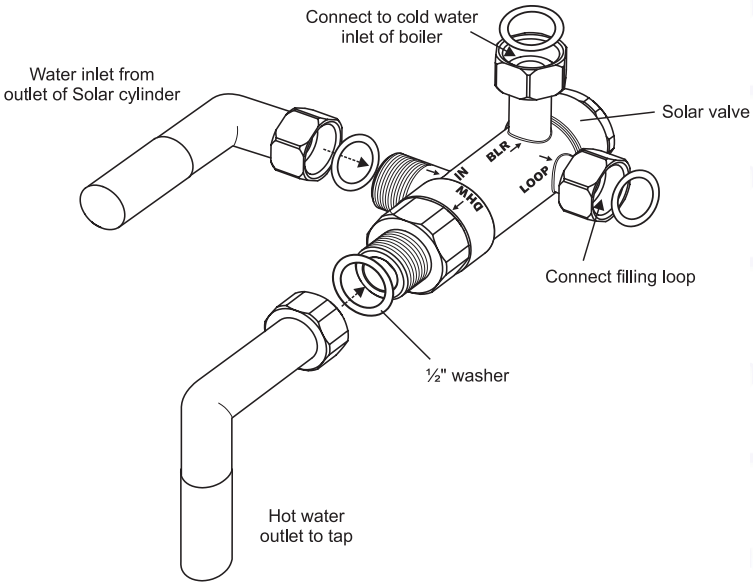

Fig. 14

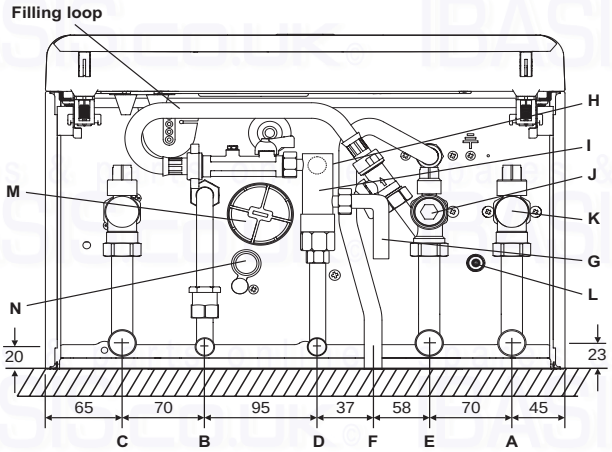

CD25, 28, 35C

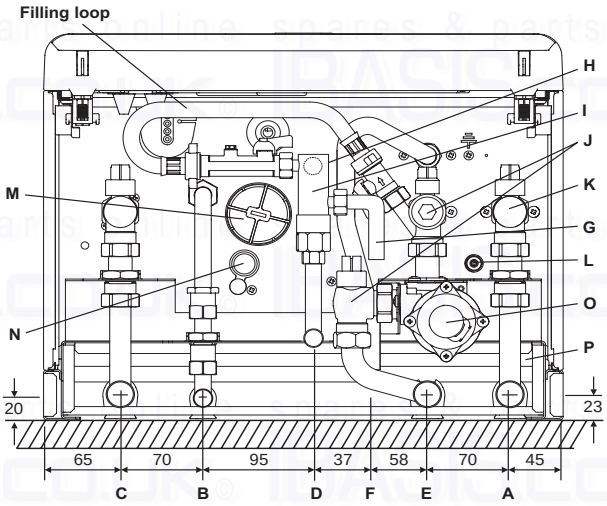

CD25, 28, 35C with Premier Pack

A - Heating flow (22 mm)
B - Hot water outlet (15 mm)
C - Gas inlet (22 mm)
D - Hot water outlet from Solar valve (15 mm)
E - Heating return (22 mm)
F - Pressure refief valve outlet (15 mm)
G - Water inlet from Solar cylinder (15 mm)
H - Cold water inlet filter
I - Solar Valve
J - Heating return valve
K - Heating flow valve
L - Heating drain point
M - Condensate trap
N - Condensate discharge pipe
O - Cyclone drain point (if applicable)
P - Wall jig (if applicable)

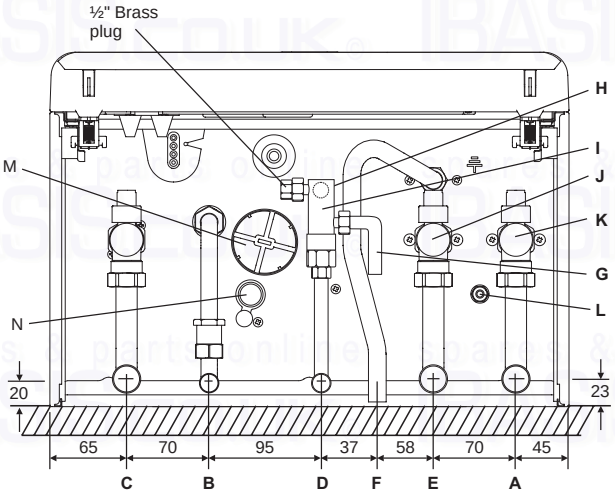

CD25, 28X

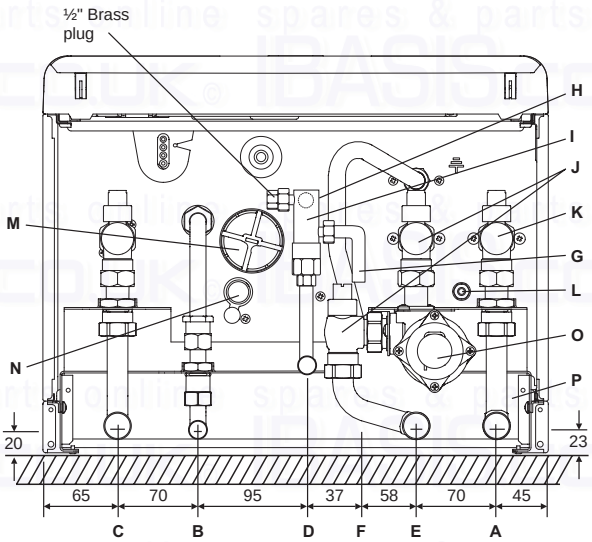

CD25, 28X with Premier Pack

Notes: **1.** Join together hot water outlets B and D to provide a single hot water supply immediately after boiler installation.
2. When connecting the Solar Valve to a CDX boiler the filling loop connection of the Solar Valve must be plugged with a ½" brass plug.
3. When connecting the Solar Valve to a CDC boiler isolate the filling loop after filling the central heating system.

Fig. 15

3. A self adhesive label is supplied in the Solar Valve Kit. This label **must** be located as shown in Fig. 16, over the boiler hot water thermostat knob after it has been set to its maximum position, i.e. fully clockwise to position No. 9. This will ensure that the hot water temperature from the boiler will be approximately 60°C and will prevent the knob from being adjusted to a lower temperature.
Note: The User must be informed of the purpose of this label, which **must not** be removed.

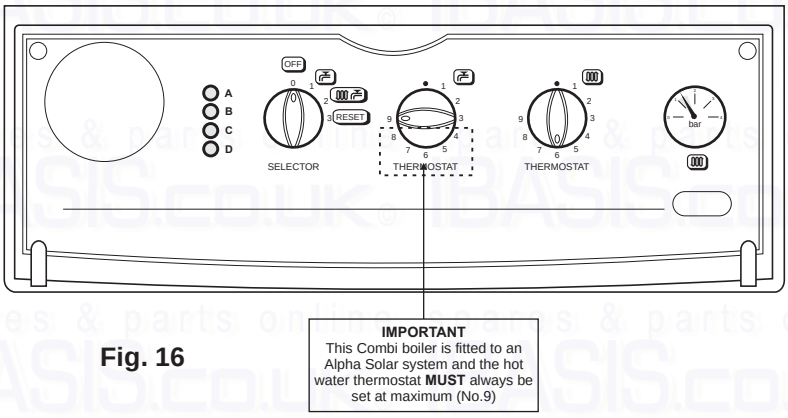

Fig. 16

4.8 CONNECT THE PIPEWORK - Fig. 15

1. Thoroughly flush out all the water pipework.

   Ensure that all the plastic caps are removed from all connections.

   Note: If soldering union bends, ensure that the bends are not connected to the valves etc., otherwise the internal seals may be damaged.
2. Connect the pipework from the unvented kit to the solar cylinder.

   Note: No valves must be fitted between the cylinder and the unvented kit.
3. Connect the system pipework to the boiler and the discharge pipe to the heating system pressure relief valve.

   Do not forget that the pressure relief valve discharge pipe must be routed clear of the boiler to a drain in such a manner that it may be seen, but cannot cause injury to persons or property. Refer to the boiler instructions.
4. Connect the discharge pipework to the temperature/pressure relief and expansion relief valves via the tundish supplied.

   This pipework must be installed as recommended in Unvented Hot Water Storage System, Section 3.3.
5. Ensure that all the valves are closed (spindle flats at right angles to valve) and do not turn on the water supply at this stage.

4.9 ELECTRICAL CONNECTIONS - See Wiring Diagram Section 9

1. Gain acces to the electrical control box of the solar cylinder by removing the screw and washer securing the bottom cover and remove the cover. See Fig. 17. Remove the screws securing the front of the control box to provide access to the terminals on the control board.

   Refer to Section 2.6 for details of all electrical connections required.
2. **Connect the Drain Back Unit pump -** The drain back unit pump is fitted with a 7 metre cable. Route the cable to the solar cylinder control box along the lower groove in the cylinder insulation panel and pass it through the cable clamp.

   Connect the wires as follows:

   Brown wire to terminal 9, Blue wire to terminal 8 and Green/Yellow wire to ⏚.

   Ensure that the cable is secured in the cable clamp.
3. **Connect the Collector Sensor -** The sensor has a 7 metre cable. Route the cable to the solar cylinder control box along the lower groove in the cylinder insulation panel and pass it through the cable clamp. Connect the White and Brown wires to terminals 2 and 3.

   Ensure that the cable is secured in the cable clamp.

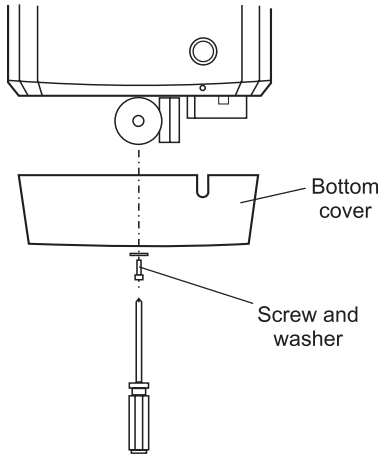

Fig. 17

4. **Connect the Mains Supply -** Refer to Sectioin 2.6.

   Note: The solar cylinder has been fitted with a mains supply cable. However, if it is necessary to fit an alternative supply cable refer to Section 3.1 and release the cable clamp. Connect the new lead as follows:

   Brown wire to L, Blue wire to N and Green/Yellow to ⏚.

   Note: Ensure that the length of the earth wire is such that if the supply cable is pulled out of its clamp the live and neutral wires become taut before the earth wire.
5. Do not switch on the electrical supply at this stage.

   Do not make any connections to terminals 4, 5, 6, or 7 and do not fit any other controls.

5 COMMISSIONING

5.1 FILL THE SOLAR CYLINDER

1. Check that all the mains water connections are tight and any drain valves are closed.
2. Open the mains water inlet valve. Thoroughly flush out the hot water system by turning on all the hot water taps and allow the water to flow until no air is present, this will automatically vent the cylinder of air. Turn off each tap.
3. It is important to vent the solar cylinder pump by unscrewing the centre cap from the pump head (see Fig. 18) until water runs from it and then replace the cap.
4. Isolate the mains inlet and drain the cylinder to remove any debris that may have collected in the cylinder. Refill and vent the system as described above.

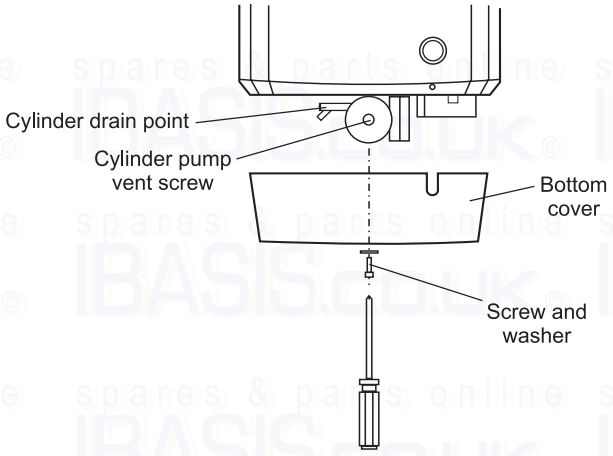

Fig. 18

5.2 DRAIN BACK UNIT

The drain back unit is pre-filled and should not need any water added.

Note: The drain back unit is filled with domestic water.

It is important to prime the drain back unit pump:- unscrew the centre cap and rotate the spindle using a small screwdriver. Replace the cap.

If the drain back unit requires to be filled, fill as follows:

1. Isolate the electrical supply to the SolarSmart System.
2. Remove the front cover from the drain back unit (pulls off).
3. Unscrew the plug located in the fill/overflow point. See Fig. 19.
4. Carefully fill the drain back unit with water (use a flexible tube or funnel) until water overflows from the fill/overflow point (see Fig. 19). This indicates the correct fill level has been reached.

   Note: Do not overfill.
5. Replace the plug in the fill/overflow point.
6. Switch on the electrical supply and 'start up' the Solar system as described in Section 5.3.
7. Check for any leaks and replace the front cover.

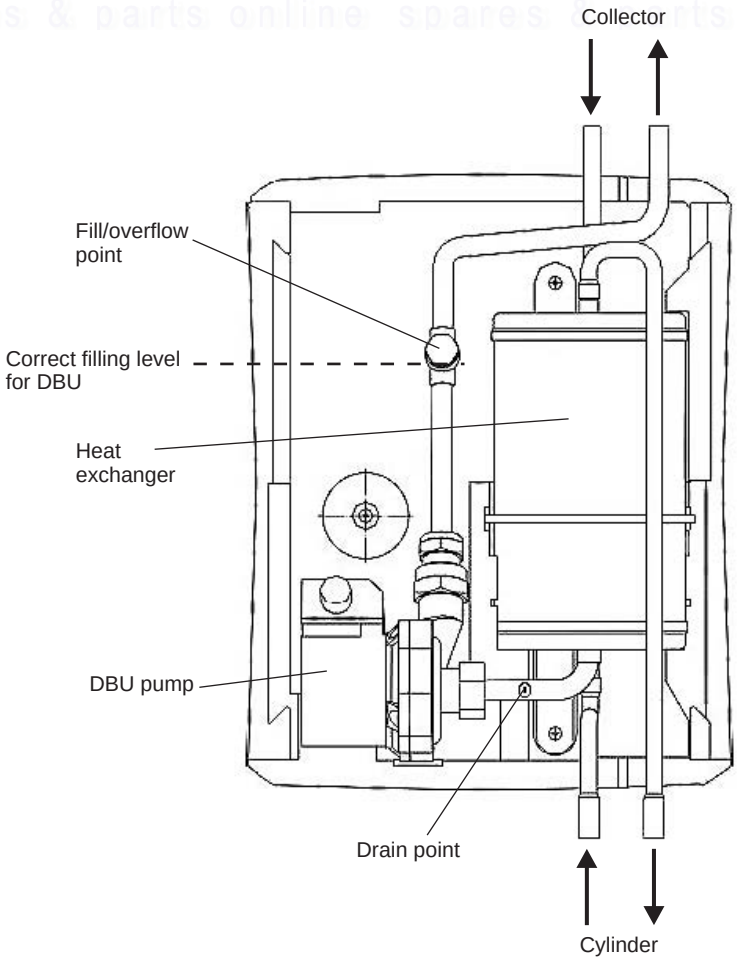

Fig. 19

5.3 TURN ON THE ELECTRICAL SUPPLY

1. Check that all the wiring has be correctly installed and that all the terminal connections are tight.
2. Switch on the electrical supply and the display (see Fig. 20) will show 'A1' and start to countdown from eighty to zero. During this countdown the PCB does a self-diagnosis of all the sensors and pumps. If the collector temperature is between 10 and 130°C the drain back unit pump will run for a short period to run a test program, after which the system is ready for use.
3. When all the self-diagnostic procedures have been completed, the display will flash between the solar cylinder temperature and the operation mode.
4. If there is enough solar light at the collector the cylinder pump will run, shortly followed by the drain back unit pump. The drain back unit pump runs at full speed for 250 seconds to purge any air from the collector then it modulates to its optimum speed for the collector temperature.

5.4 DISPLAY - Fig.20

The controls of the solar cylinder are able to indicate working modes on the display. The push button provides the means to operate the cylinder. During normal operation the system can be turned on and off using the button. When the button is held in for 5 seconds the diagnostic mode will be entered. Refer to Section 7. If the button is not touched for 5 seconds, the last mode will become active.

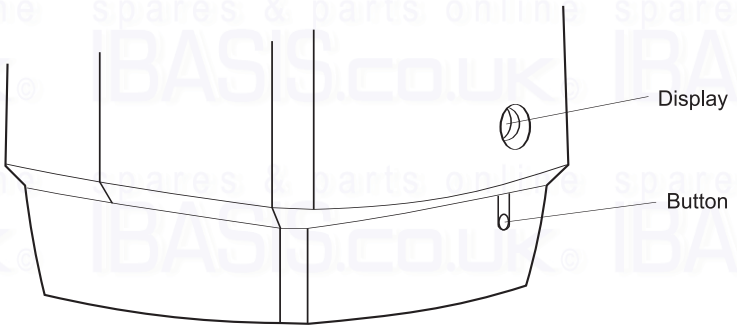

Fig. 20

Display shown	Display explained
oN	The indicates the operating mode of the solar system, on or off (oN or oF).
oF	If oF is shown the solar system is not operating, press the button to change from off to on. **Note:** Always leave the system on
68	This is the temperature of the domestic hot water (°C) in the solar cylinder. When the system is on and working, the display will alternate between the domestic hot water temperature (for 4 seconds) and the operating mode (oN or oF for 2 seconds).
65.	This is the temperature of the domestic hot water (°C) in the solar cylinder. The flashing dot in the right hand corner of the display shows that the drain back unit pump and cylinder pump are running.
6.5	This is the temperature of the domestic hot water (°C) in the solar cylinder. The flashing dot in the middle of the display shows that only the cylinder pump is running.
71	Flashing fault codes (71 to 84). Refer to Section 7 for a list of fault codes and possible solutions.

Complete the details of the boiler installation in the Checklist in Section 12.

5.5 USER INFORMATION

The User must be advised (and demonstrated if necessary) of the following important points:-

1. How to turn the Solar Smart system on and off. It is recommended the system is always left on.
2. Explain what information is shown on the display and in the unusual case of a fault occurring, explain the fault codes that may be shown.
3. How important it is for the combination boiler hot water thermostat to be left at the maximum position (No. 9) and that it is the purpose of the label (Fig. 16) to maintain this and that the label must not be removed.
4. Show the User the position of the pressure relief valve discharge pipe.
5. Explain the importance of regular inspection to check the safe and efficient operation of the system.
6. Ensure the Checklist in Section 11 has been completed after the unit has been installed and commissioned.
7. Leave these instructions with the User for use on future calls and for recording details in the Inspection History Section 13.

6 SYSTEM OPERATION

6.1 WORKING PRINCIPAL - Fig.21

The solar collector uses the energy of the natural light to heat the water being circulated around the collector. When the heated water enters the drain back unit, heat is transfer into the stored water via a heat exchanger coil. Stored domestic hot water is pumped from the bottom of the solar cylinder through the drain back unit heat exchanger coil where it is heated and returned to the cylinder.

When a hot water tap is turned on mains water flows into the bottom of the solar cylinder and hot water flows out of the top towards the solar valve at the boiler. If the water from the cylinder is above 60°C the solar valve diverts the flow directly to the tap, if the temperature is less than 60°C the valve diverts the flow through the combination boiler. When the flow is via the combination boiler the water temperature is maintained by the boiler. As the temperature of the water entering the boiler is higher than the normal incoming mains water, less gas is required to heat the water to the set temperature of above 60°C thereby saving energy costs.

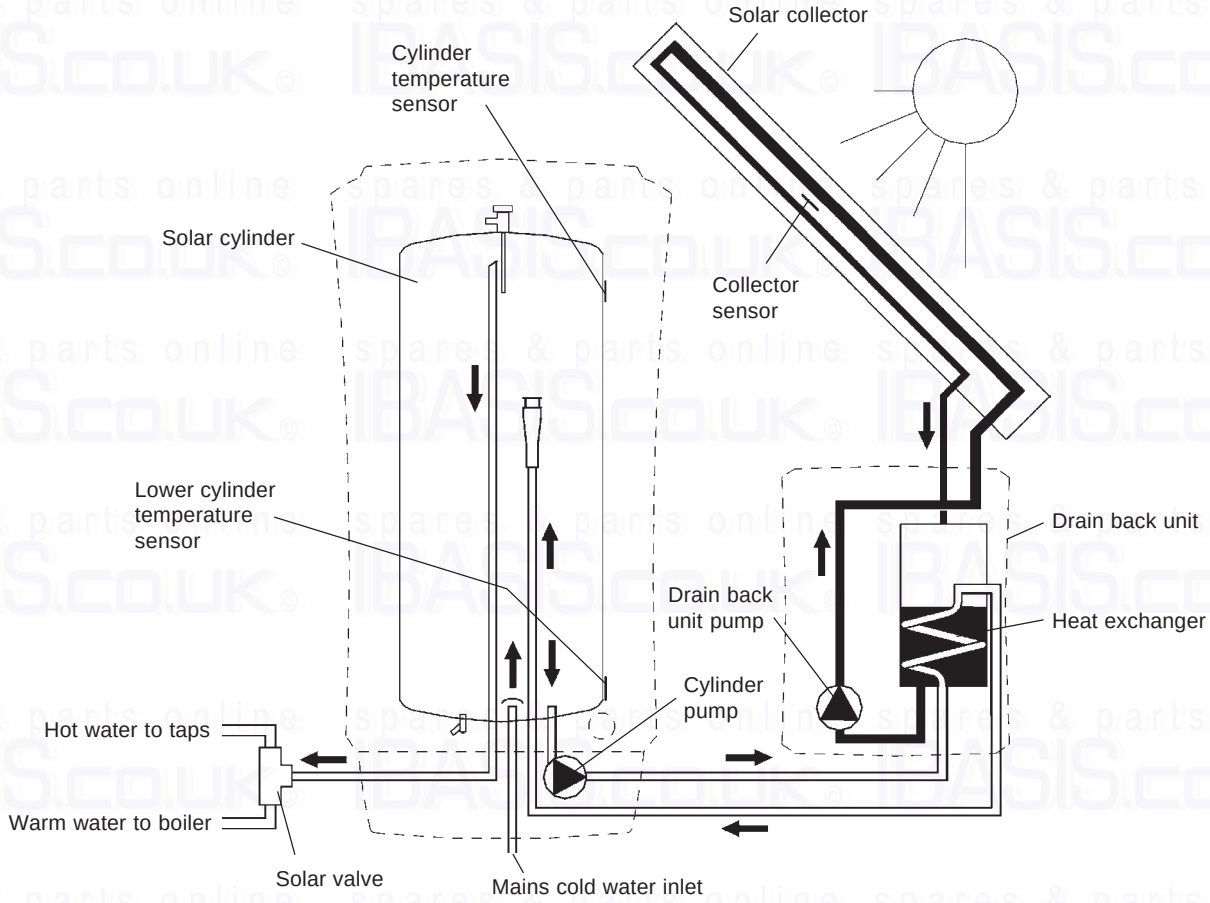

Fig. 21

6.2 OPERATION OF THE SOLARSMART SYSTEM - Fig.21

Control

When the controls detect a collector sensor temperature that is at least 10°C higher than the lower cylinder sensor and the solar cylinder temperature is less than 65°C, the drain back unit pump will start. The pump will run at full speed for 250 seconds and then modulate between 16 and 50% of full speed to circulate water around the collector. The speed of the pump is dependent upon the difference in the temperature between the collector sensor and the lower cylinder sensor.

At the same time that the drain back unit pump starts the cylinder pump will start at 10% of full speed to circulate the cylinder water through the drain back unit heat exchanger. The drain back unit pump will stop when the temperature difference between the collector sensor and the lower cylinder sensor falls to 3.5°C or the cylinder temperature reaches 70°C. The cylinder pump will continue to run for 120 seconds to collect any excess heat from the drain back unit then it will also stop.

When both pumps are operating, a flashing dot will be visible in the right hand corner of the display (Fig. 20). If only the cylinder pump is running, a flashing dot will be visible in the middle of the display.

If a fault occurs, a fault code will be visible in the display. Refer to Section 7 for a list of fault codes and possible solutions.

Temperature display

The display (see Fig. 20) will display the solar cylinder temperature (10 - 70°C) for 4 seconds followed by the operating mode (on or oF) for 2 seconds, after which the sequence will be continually repeated.

Domestic hot water circuit

When a hot tap is opened, cold mains water enters the solar cylinder at the bottom forcing hot water out from the top to go to the solar valve where it either goes directly to the tap or to the boiler for further heating. The cylinder pump passes the cool water from the bottom of the cylinder through the drain back unit heat exchanger and warm water back to the centre of the cylinder.

Collector water circuit

The drain back unit pump (See Fig. 21) is controlled by the PCB. The collector water is circulated in a closed loop through the collector panel where it is heated then passes through the heat exchanger in the drain back unit where heat is transferred to the domestic water from the cylinder.

Frost protection

If the collector sensor registers a temperature less than 3°C, the temperature difference required to start the drain back unit pump (normally 10°C) will be increased by 15° to 25°C. This will ensure that the unit will not operate in frosty conditions (with the possibility of freezing). When the temperature rises above 3°C this temperature difference of 25°C will remain for a further 24 hours when it returns to normal.

Pumps

If the electrical supply is on and the solar system has not operated for 24 hours, the pumps will operate automatically every 24 hours, providing the collector temperature is above 10°C.

Overheat thermostat

In the unlikely event the temperature of the stored water in the Solar cylinder reaches 90°C, the overheat thermostat (see Fig. 3) will operate and switch off the collector pump. If this happens the overheat thermostat will need to be manually reset by pushing its reset button.

Alpha SolarSmart remote display unit - Part No. 6.4001100

The Alpha SolarSmart remote display unit is available as an optional accessory. This unit allows the information and control available on the main Solar control panel to be in a place that is more visible and accessible to the user. This is particularly useful if the solar system is in the loft or garage.

Note: Two core cable is required to connect the display unit to the solar control box. The Alpha SolarSmart display unit is only compatible with later versions of the SolarSmart system. Compatibilty can be checked by looking at the PCB version label on the main control PCB. Only version 28 (V28) onwards is compatible.

7 ROUTINE INSPECTION

To ensure efficient operation of the SolarSmart system, it is recommended that it is inspected and checked (by a competent person) as necessary at regular intervals.

Warning: Before removing any covers or working on the system, isolate the electrical supply.

The data badge for the cylinder is located on top of the front cylinder housing underneath the top cover. Refer to Fig. 5a for location of serial number.

Always carry out electrical system checks, i.e. earth continuity, resistance to earth, short circuit and polarity with a suitable meter, after any electrical work has been carried out on the system.
Check the operation of the system before and after any servicing or replacement of parts.

7.1 IMPORTANT NOTES FOR ROUTINE INSPECTION

1. Run the system and check the operation.
2. Ensure that all system connections and fittings are sound.
3. Open the Solar cylinder's drain valve (Fig. 2, item 24) until the water from the bottom of the cylinder runs clear.
4. Inspect and clean, if required, the filter and cartridge in the pressure reducing valve and cartridge in the expansion relief valve fitted to the unvented kit.
5. Check the operation of the expansion relief valve by turning the head anti-clockwise until it clicks. The click is the valve lifting off its seat allowing water to escape to the discharge pipe - check that this is happening and that the valve is not leaking after it has been operated,
6. Check the charge in the domestic hot water expansion vessel and re-pressurise, if necessary.
   Note: Only check the expansion vessel charge when the **system** pressure is zero.
7. Record details of the inspection in the Inspection History Section 13.

8 COMPONENT REPLACEMENT

It is recommended that any service work is carried out by a competent person.

Warning: Before removing any covers or working on the system, isolate the electrical supply.

The data badge for the cylinder is located on top of the front cylinder housing underneath the top cover. Refer to Fig. 5a for location of serial number.

Always carry out electrical system checks, i.e. earth continuity, resistance to earth, short circuit and polarity with a suitable meter, after any electrical work has been carried out on the system.
Check the operation of the system before and after any servicing or replacement of parts.

Refer to Section 12 for information on parts and their location.

8.1 REMOVE THE CASING

Isolate the electrical supply before removing the casing. Remove the pozi-head bolt securing the bottom cover and pull the cover down to remove. When replacing the cover it must be offered up from beneath ensuring that the push button at the front locates into the slot in the PCB cover.

Top cover - Lift upwards to remove.

Front casing - Once the top and bottom covers have been removed the front casing can be pulled straight forwards, this will allow access to all components on the cylinder.

8.2 DRAIN THE CYLINDER

Isolate the mains water supply and open a hot tap to release the pressure in the cylinder. Attach a hose to the drain valve located at the bottom of the cylinder and route the hose to a drain. Open the drain valve to drain the cylinder.

8.3 PRESSURE REDUCING VALVE

Isolate the mains water supply and open a hot tap to release the pressure in the cylinder. Undo the two compression nuts and remove the valve. Fit the new valve, re-tighten the compression nuts and turn on the mains water supply. Open a hot tap to vent any air from the cylinder.

8.4 EXPANSION RELIEF VALVE

Drain the cylinder as described in Section 8.2. Unscrew the two mains pipe connections and the discharge pipe connection, then unscrew the valve from the expansion vessel. Fit the new valve in the reverse order using a new washer.

8.5 EXPANSION VESSEL

Drain the cylinder as described in Section 8.2. Loosen the vessel clamp and unscrew the vessel from the expansion relief valve while holding the valve with a spanner to prevent damaging the mains pipe. Reassemble in reverse order with a new vessel and washer.

8.6 TEMPERATURE AND PRESSURE RELIEF VALVE

Drain the cylinder as described in Section 8.2. Loosen and remove the copper pipe from the valve and release the ¾" nut and remove the valve from the cylinder. There is a ¾" to ½" adapter fitted to the valve, which must be removed and fitted to the new valve and sealed with a thread sealer suitable for mains water. Reassemble in reverse order.

8.7 CYLINDER TEMPERATURE SENSORS

Remove the casing as described in Section 8.1. Remove the three screws securing the PCB cover and remove the cover. Unplug the sensor plug from the PCB (refer to wiring diagram in Section 9) and remove the sensors and tape from the cylinder. Fit the new sensors in position using the new tape provided and plug them into the PCB. Reassemble in reverse order.

8.8 PCB - refer to Section 9

Remove the casing as described in Section 8.1. Remove the screws securing the control cover and remove the cover. Remove all terminal connections and remove all plug in connections. Pull back the two clips to the left of the PCB and pull the PCB forwards to remove. Fit the new PCB and reassemble in reverse order.

8.9 CYLINDER PUMP

Drain the cylinder as described in Section 8.2. Remove the terminal cover on the pump and remove the supply lead from the terminals. Unscrew the four 5 mm Allen bolts and remove the pump head. Fit the new head and reassemble in reverse order.

8.10 CYLINDER MANIFOLD ASSEMBLY

Drain the cylinder as described in Section 8.2. Disconnect the power cable from the pump and the earth lead from the manifold assembly and unplug the overheat thermostat. Disconnect all pipe connection and remove the two retaining clips, one either side at the top of the manifold. It is now possible to pull down on the manifold and remove it from the cylinder, taking care not to damage the plastic tubes connected to it.

With the manifold removed from the cylinder it is possible to replace or service the following parts; hot water outlet pipe, mains inlet strainer/diffuser, hot inlet pipe, hot inlet diffuser and pump outlet pipe.
Re-assemble in reverse order.

8.11 DBU PUMP

Note: Care must be taken when carrying out repairs to the DBU as it reaches very high temperatures and can emit steam from connections when being removed.

Isolate the mains electric supply and remove the front case of the drain back unit by simply pulling it forwards. Place a bucket under the drain plug at the bottom of the unit and using a suitable spanner, unscrew the plug while holding the plug housing with another spanner to prevent damaging the pipe. Remove the terminal cover on the pump and remove the supply lead from the terminals. Undo the four 5 mm Allen bolts and remove the pump head. Fit the new pump head, reconnect the supply lead and fit the terminal cover. Replace the drain plug and remove the filling plug located in the pump flow pipe, using two spanners as before. Using a short piece of hose and a funnel, slowly fill the drain back unit with water until it reaches the level of the filler plug. Replace the plug and front case.

8.12 OVERHEAT THERMOSTAT

Isolate the electric supply and remove the casing as described in Section 8.1. The overheat thermostat is located on a pipe at the bottom of the cylinder. Pull the plug from the thermostat and unscrew the thermostat from the pipe. Reassemble in reverse order.

8.13 OVERHEAT THERMOSTAT PLUG AND LEAD

Isolate the electric supply and remove the casing as described in Section 8.1. Remove the screws securing the PCB cover and remove the cover. Unplug the thermostat lead from terminal 12 on the PCB and the earth lead from its spade connection. Unplug the lead from the thermostat located on the return pipe at the bottom of the cylinder. Loosen the gland securing the lead and remove the lead, then feed the new lead into the gland and reassemble in reverse order.

8.14 COLLECTOR TEMPERATURE SENSOR

The collector sensor is sealed into the collector during manufacture. If it fails, a replacement sensor kit is available which comprises of a sensor with a lead and grommet attached and a clip for securing the sensor to the collector plate. The Collector will have a pre-drilled hole on one side blanked by a rubber grommet, which, must be removed to fit the new sensor. The sensor should be fitted to the clip and then inserted through the hole in the collector with the sensor at the back of the plate and the clip hooked over the front, similar to a pen clipped in a pocket. Slide the grommet along the lead and into the hole making a seal.
Route the lead neatly to the break through in the roof and plug it into its connecting lead.

Note: 1) If a landscape collector is used the position of the grommet will be located at the top left hand side and for portrait collectors the grommet will be located at the top right hand side.

2) Access to the grommet **may** be possible from within the roof area by removing tiles from inside.

8.15 DBU HEAT EXCHANGER

Note: Care must be taken when carrying out repairs to the DBU as it reaches very high temperatures and can emit steam from connections when being removed.

Isolate the mains electric supply and remove the front case of the drain back unit by simply pulling it forwards. Place a bucket under the drain plug at the bottom of the unit and using a suitable spanner, unscrew the plug while holding the plug housing with another spanner to prevent damaging the pipe. Loosen the pump inlet connection and the collector flow and return connections to the heat exchanger. Loosen the cylinder flow and return connections to the heat exchanger and remove. Replace in reverse order.

Replace the drain plug and remove the filling plug located in the pump flow pipe, using two spanners as before. Using a short piece of hose and a funnel, slowly fill the drain back unit with water until it reaches the level of the filler plug. Replace the plug and front case.

9 WIRING DIAGRAM

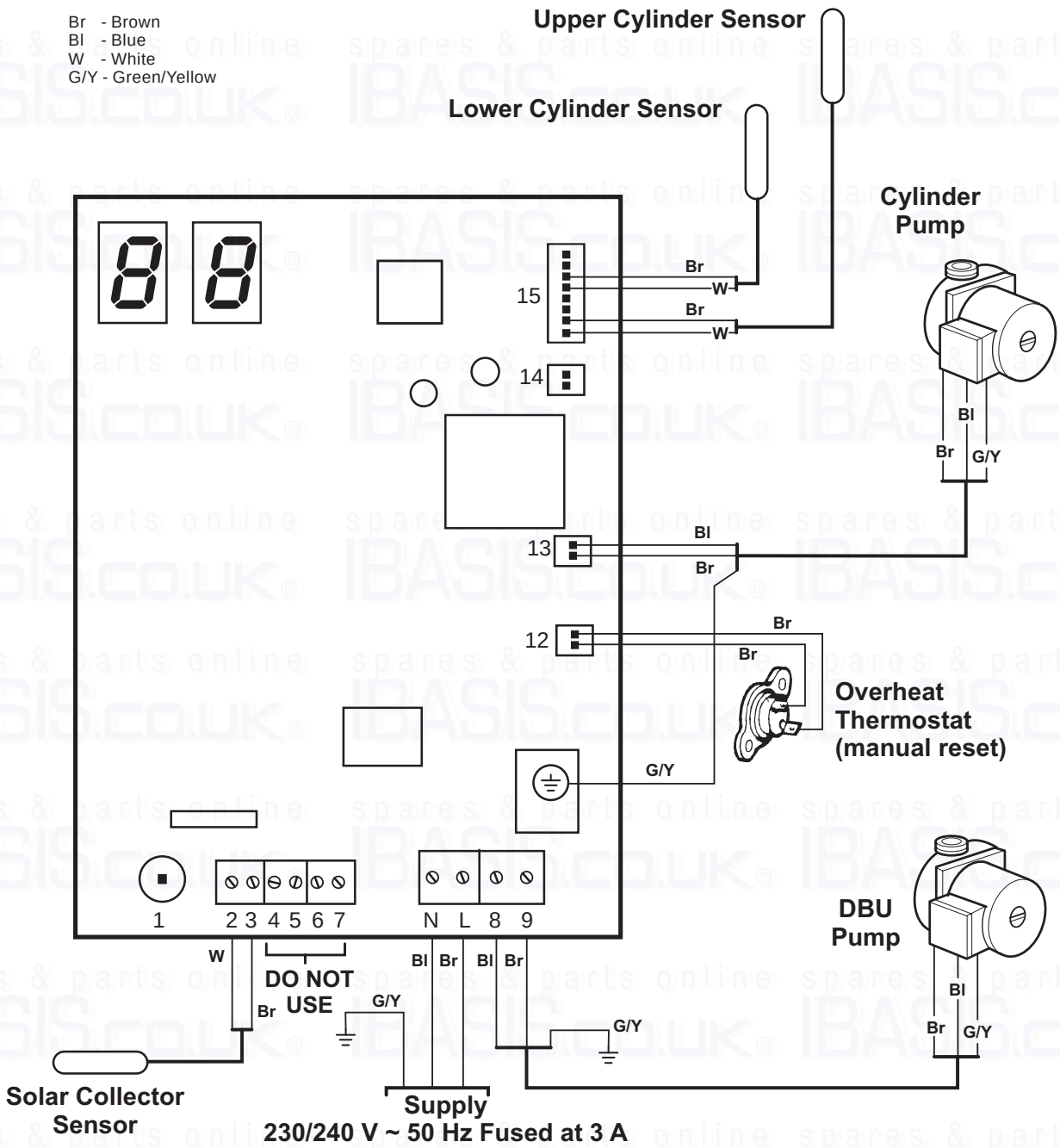

NOTE: Do not connect any other external controls

10 DIAGNOSTICS AND FAULT CODES

10.1 FAULT CODES

The solar system is fully controlled by the electronic control on the cylinder. Fault codes will be displayed at the cylinder by means of a flashing fault code (71 to 80). The following codes can be displayed.

Codes 71, 72 and 80 will stop the solar system working: The cause must be rectified before the system will operate. When the cause has been rectified the system will start by itself.	
Code 71 Collector sensor fault	Temperature of the collector is below -40°C or above 250°C. Check the collector sensor: does it operate (check sensor resistance in table on next page). Sensor cable damaged or short circuited. Sensor is faulty.
Code 72 Upper cylinder sensor fault	Temperature of the cylinder is below 0°C or above 100°C. Check the upper cylinder sensor: does it operate (check sensor resistance in table on next page). Sensor cable damaged or short circuited. Sensor is faulty.
Code 80 Lower cylinder sensor fault	Temperature of the cylinder is below 0°C or above 100°C. Check the lower cylinder sensor: does it operate (check sensor resistance in Section 7.3). Sensor cable damaged or short circuited. Sensor is faulty.
Code 77 is the only code displayed that is not actually a fault: The code will disapear if the button is pressed.	
Code 77 The system is not turned on	The control has not been operating for 30 days. Check the collector sensor and the lower cylinder sensor, do they operate (check sensor resistance in Section 7.3).
Codes 74 and 75 will lock the solar system: The cause must be rectified before the system will operate. When the cause has been rectified the system control can be reset by pressing the button.	
Code 74 No circulation in the collector	Check water level in drain back unit. Check overheat thermostat - manually reset if required. Check the difference in height between the drain back unit pump and the upper most side of the collector. This can be a maximum of 3 metres. Check that the pipework between the DBU and collector is no more than 2 m in length. Check the collector sensor and the lower cylinder sensor, do they operate (check sensor resistance in Section 7.3). Check the collector tubes, are they blocked with dirt? Is the decline of the pipes within the 40 mm per metre requirement. Check the electrical connection and operation of the drain back unit pump and the cylinder pump.
Code 75 Collector temperature too high	After 5 minutes the collector temperature is still too high (above 130°C) with the drain back unit pump operating. Check the level of water in the drain back unit. Refer to filling procedure in Section 5.2. Check the difference in height between the drain back unit pump and the upper most side of the collector. This can be a maximum of 3 metres. Check the collector sensor and the lower cylinder sensor, do they operate (check sensor resistance in Section 7.3). Check the collector tubes, are they blocked with dirt? Is the decline of the pipes within the 40 mm per metre requirement. Check the electrical connection and operation of the drain back unit pump and the cylinder pump.

10.2 DIAGNOSTIC MENU

To enter the diagnostic menu press the button (beneath the display) in for 5 seconds. Each following press of the button will advance through the diagnostic sequence as shown in the following table.

The code for the item being diagnosed and its value will be alternately displayed.

When you reach the last item, pressing the button again will return you to the first item. If you press the button in for 5 seconds or do not touch it for 10 minutes, the system will leave the diagnostic mode return to the normal operating display.

Item being diagnosed	Pre V28 PCB Display	V28 PCB 2010 > Display	Value of item being diagnosed
Software version	50	50	00 - 99
Frost protection	D0	D0	Cb (Collector protection), 00 means collector protection is in off mode
Mode	D1	D1	oF or oN
Collector temperature	D2	D2	00 - 99 (°C). Above 99°C the value will flash, i.e. flashing 05 indicates 105°C
Upper cylinder temperature	D3	D3	00 - 99 (°C)
Aux heat source temperature	N/A	D5	-- or 00 - 99 (°C)
Lower cylinder temperature	D5	D4	00 - 99 (°C)
Not allocated	D6	-	--
Drain back unit pump speed	D7	D6	00 - 99 (%)
Cylinder pump speed	D8	D7	00 - 99 (%)
Diverter valve	N/A	D8	-- or 0 = not fitted, 1 = Solar collector, 2 = Aux heat source
Fault history	E0 - E9	E0 - E9	XX XX = Fault code

10.3 COLLECTOR SENSOR - TEMPERATURE AND RESISTANCE DATA

°C	KΩ (Ohm)	°C	KΩ (Ohm)	°C	KΩ (Ohm)
0	32.15	35	6.53	70	1.75
5	26.31	40	5.33	75	1.48
10	19.86	45	4.37	80	1.26
15	15.89	50	3.60	85	1.07

°C	KΩ (Ohm)	°C	KΩ (Ohm)	°C	KΩ (Ohm)
20	12.49	55	2.99	90	0.92
25	10.00	60	2.49	95	0.79
30	8.06	65	2.09	100	0.68

11 CHECKLIST FOR UNVENTED STORAGE

Ensure the following is completed after the unit has been installed and commissioned:-

UNVENTED HOT WATER STORAGE SYSTEM

Are combined temperature/pressure releief valve and expansion valve fitted and discharge tested? ☐ Yes ☐ No

What is incoming static cold water pressure at the inlet to the pressure reducing valve? ☐ bar

Has strainer (if fitted) been cleaned of installation debris? ☐ Yes ☐ No

What is the pressure reducing valve setting (if fitted)? ☐ bar

Where is the pressure reducing valve situated? .....

Has the expansion vessel or internal air space been checked? ☐ Yes ☐ No

FOR ALL INSTALLATIONS CONFIRM THE FOLLOWING:

The hot water system complies with current Building Regulations ☐ Yes

The appliance and associated equipment has been installed and commissioned in accordance with the manufacturer's instructions ☐ Yes

The operation of the appliance and system controls have been demonstrated to the customer ☐ Yes

The manufacturer's literature has been left with the customer ☐ Yes

COMMISSIONING ENG'S NAME:

Print ..... CORGI ID No. .....

Sign ..... Date .....

12 PARTS LIST

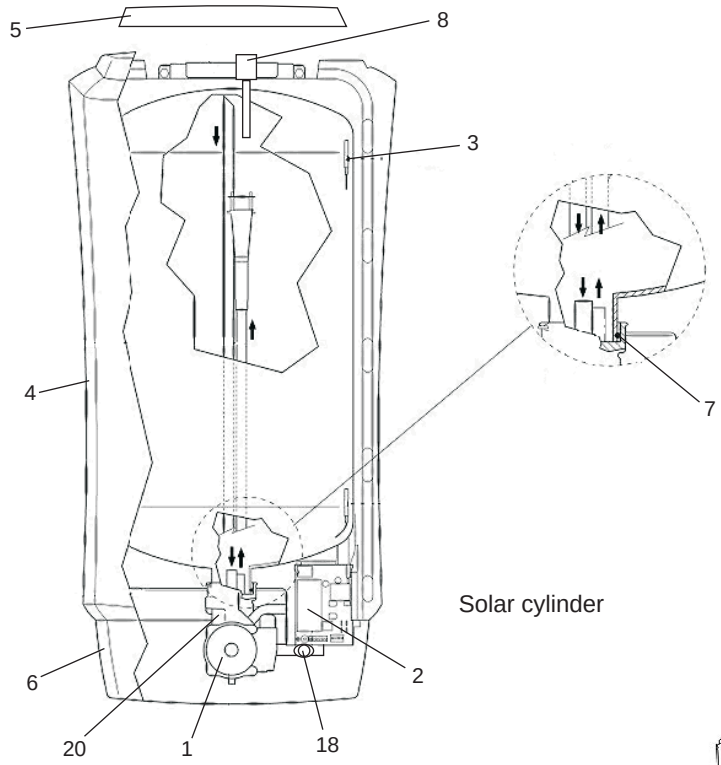

Solar cylinder

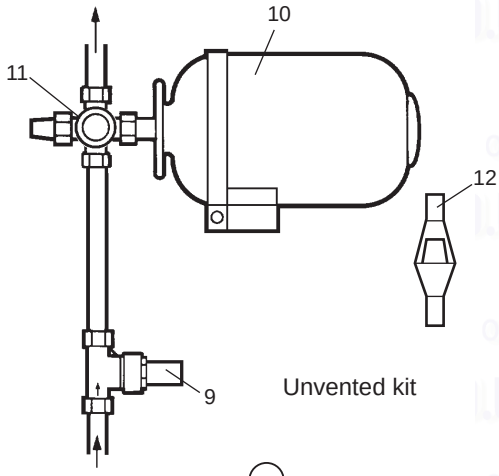

Unvented kit

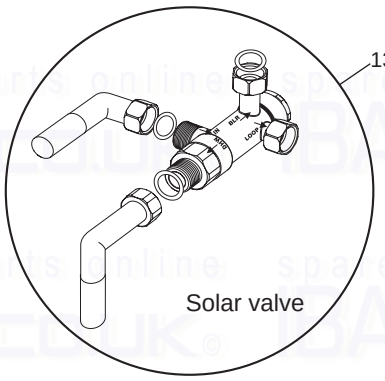

Solar valve

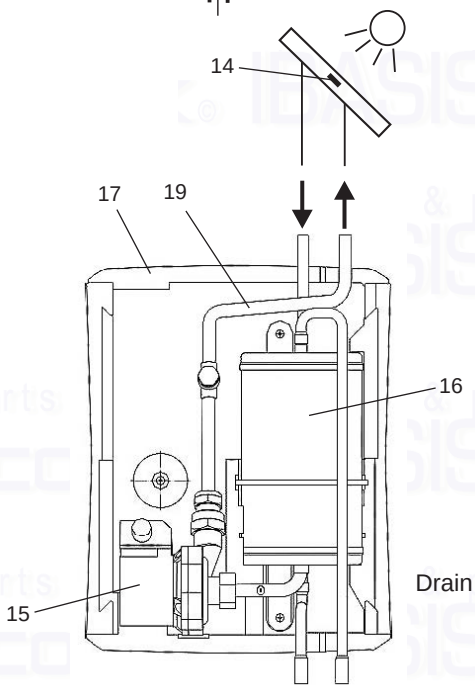

Drain back unit

Ref.	Description	Qty.	Part No.
1	Cylinder pump	1	4.1060499
2	PCB	1	4.1060723
3	Set of two cylinder temp. sensors	1	4.1060497
4	Front housing - cylinder	1	4.1060725
5	Top cover - cylinder	1	4.1060724
6	Bottom cover and screw - cylinder	1	4.1060726
20	Manifold and pipework assembly	1	4.1060727
7	Manifold seal kit	1	4.1060495
8	Temp./press. relief valve - 90°C/7 bar	1	1.8244
9	Pressure reducing valve - 2.5 bar	1	1.017936
10	Expansion vessel - 8 litre	1	6.4009031
11	Expansion relief/check valve - 6 bar	1	6.0001020
12	Tundish	1	1.018148
13	Solar valve	1	3.017409
14	Collector temperature sensor kit	1	4.1060719

Ref.	Description	Qty.	Part No.
15	Drain back unit pump	1	4.1060730
16	Drain back unit heat exchanger	1	4.1060509
17	Front and back housing - drain back unit	1	4.1060506
18	Overheat thermostat	1	4.1060794
19	DBU pipe from pump	1	4.1060705
-	Collector temperature sensor lead	1	4.1060798
-	Plug and lead - overheat thermostst	1	4.1060795
-	Collector hoses & fittings - DBU to collector	2	4.1060801
-	Cylinder mounting kit	1	4.1060494
-	HT pipe insulation pack - DBU to collector	1	4.1060799
-	Clips - cylinder to manifold	10	4.1060668
-	Foam seal - hose entry	1	4.1060800
-	Screw pack - DBU	1	4.1060802
-	Screw pack - flashing kit	1	4.1060796
-	Bolt/washer pack - collector to flashing kit	1	4.1060797
-	12 m collector temp sensor/pump extension lead kit	1	4.1060491
-	Remote data display unit	1	6.4001100

13 INSPECTION HISTORY

DETAILS OF SOLARSMART INSTALLATION

It is recommended your SolarSmart system is inspected regularly and that you complete the inspection record below.
Note: Always use the manufacturer's specified spare parts when replacing any parts.

Date of Installation: .....

Name of Installer: .....

Address: .....

.....

.....

Postcode: .....

Telephone No: .....

Cylinder Serial Number: .....
(see data label on top of cylinder underneath the cover or bottom of cylinder - refer to Fig. 5a for positions)

DETAILS OF SYSTEM INSPECTION HISTORY

Date of Inspection	Details of Inspection	Engineer, Company, Tel. No.
.....	.....	.....
	.....	.....
	.....	.....
.....	.....	.....
	.....	.....
	.....	.....
.....	.....	.....
	.....	.....
	.....	.....
.....	.....	.....
	.....	.....
	.....	.....
.....	.....	.....
	.....	.....
	.....	.....

Alpha
HEATING INNOVATION
Alpha Therm Limited.
Nepicar House, London Road, Wrotham Heath,
Sevenoaks, Kent TN15 7RS
Tel: 0844 8718764

email: info@alpha-innovation.co.uk
website:www.alpha-innovation.co.uk

These instructions have been carefully prepared but we reserve the right to alter the specification at any time in the interest of product improvement.
© Alpha Therm Limited 2010.

Manual compiled and designed by Publications 2000 - Tel: (01670) 356211 0710/D253