Alpha
HEATING INNOVATION

Installation, User and Servicing Instructions

InTec 50CS

Floor standing, high output, condensing boiler

Leave these instructions with the User

spares & parts online IBASIS.CO.UK

BENCHMARK SCHEME

To comply with Building Regulations Part L1 (Part 6 in Scotland) the boiler should be installed in accordance with the manufacturer's instructions. Self-certification that the boiler has been installed to comply with Building Regulations can be demonstrated by completing and signing the Benchmark Checklist at the back of these instructions

Code of Practice

For the installation, commissioning and servicing of domestic heating and hot water products.

Benchmark places responsibilities on both manufacturers and installers*. The purpose is to ensure that customers** are provided with the correct equipment for their needs, that it is installed, commissioned and serviced in accordance with the manufacturer's instructions by competent persons and that it meets the requirements of the appropriate Building Regulations. Installers are required to carry out work in accordance with the following:

Standards of Work

- Be competent and qualified to undertake the work required.
- Install, commission, service and use products in accordance with the manufacturer's instructions provided.
- Ensure that where there is responsibility for design work, the installation is correctly sized and fit for purpose.
- Meet the requirements of the appropriate Building Regulations. Where this involves notifiable work be a member of a Competent Persons Scheme or confirm that the customer has notified Local Authority Control (LABC), prior to work commencing.
- Complete all relevant sections of the Benchmark Check list/Service Record when carrying out commissioning or servicing of a product or system.
- Ensure that the product or system is left in a safe condition and, where possible, in good working order.
- Highlight to the customer any remedial or improvement work identified during the course of commissioning or servicing work.
- Refer to the manufacturer's helpline where assistance is needed.
- Report product faults and concerns to the manufacturer in a timely manner.

Customer Service

- Show the customer any identity card that is relevant to the work being carried out prior to commencement or on request.
- Give a full and clear explanation/demonstration of the product or system and its operation to the customer.
- Hand over the manufacturer's instructions, including the Benchmark Checklist, to the customer on completion of an installation.
- Obtain the customer's signature on the Benchmark Checklist to confirm satisfactory demonstration and receipt of manufacturer's instructions.
- Advise the customer that regular product servicing is needed, in line with manufacturers' recommendations, to ensure that safety and efficiency is maintained.
- Respond promptly to calls from a customer following completion of their work, providing advice and assistance by phone and, if necessary, visiting the customer.
- Rectify any installation problems at no cost to the customer during the installer's guarantee period.

* The use of the word "installer" is not limited to installation itself and covers those carrying out installation, commissioning and/or servicing of heating and hot water products, or the use of supporting products (such as water treatment or test equipment).

** Customer includes householders, landlords and tenants.

The Benchmark Scheme is managed and promoted by:
Heating and Hotwater Industry Council (HHIC)
Camden House, Warwick Rd
Kenilworth
CV8 1TH
Telephone: 01926 513747
E-mail: info@hhic.org.uk
Website: www.hhic.org.uk

benchmark COLLECTIVE MARK
THE MARK OF QUALITY FOR THE INSTALLATION, COMMISSIONING AND SERVICING OF DOMESTIC HEATING AND HOT WATER SYSTEMS

Useful contact details; **Gas Safe Register** - 0800 408 5577 - www.gassaferegister.co.uk

Alpha Heating Innovation;
General Sales Enquiries - 0844 871 8760
Technical Helpline - 0844 871 8764

CONTENTS

INSTALLATOR		page
1	Boiler installation	3
1.1	Introduction.	3
1.2	Dimensions.	4
1.3	Connections.	4
1.4	Remote controls and programmable room thermostats (optional)	5
1.5	External temperature sensor (optional)	5
1.6	Fit the flue.	6
1.7	Reduce the flue.	7
1.8	Extend the flue	8
1.9	Plume management components (optional)	9
1.10	Vertical flue options	11
1.11	Disposal of condensate	11
1.12	Flush the system.	12
1.13	Fill the system	12
1.14	Circulation pump	13
1.15	Boiler components	15

USER		page
2	User and maintenance instructions	16
2.1	Servicing.	16
2.2	General warnings.	16
2.3	Control panel	16
2.4	Operating modes.	17
2.5	Using the boiler.	17
2.6	Fault signals.	18
2.7	Boiler shutdown.	19
2.8	Restore the system pressure	19
2.9	Drain the system.	19
2.10	Drain the hot water system	19
2.11	Anti-freeze protection.	19
2.12	Case cleaning.	19
2.13	Decommissioning.	19
2.14	Parameters and information menu.	20

MAINTENANCE		page
3	Boiler start-up (initial check).	21
3.1	Hydraulic diagram.	21
3.2	Wiring diagram.	22
3.3	Troubleshooting.	22
3.4	"Chimney sweep function"	22
3.5	Pump anti-seize function	23
3.6	Three-way anti-seize function.	23
3.7	Radiator anti-freeze function.	23
3.8	P.C.B. periodic self-check.	23
3.9	Automatic vent function.	23
3.10	Yearly appliance check and maintenance.	23
3.11	Casing removal	24
3.12	Combustion settings	25
3.13	Technical data	26
3.14	Short parts list	27
	Benchmark checklist	28
	Service record	29

1 BOILER INSTALLATION

1.1 INTRODUCTION.

The Alpha InTec 50CS is a floor standing, high efficiency, condensing, room-sealed combination boiler. The burner is lit electronically and the heat output is controlled by a modulating fan and gas valve.

This is a combination boiler (for domestic use only) providing both central heating and domestic hot water at mains pressure.

The boiler is supplied with a pump, pressure relief valve, expansion vessel and pressure gauge fully assembled and tested. It is designed for use with a fully pumped, sealed and pressurised central heating system.

The boiler must be installed indoors in a frost free environment.

IMPORTANT

This boiler meets the requirements for Building Regulations for unvented hot water storage systems and the Local Authority must be notified of the intention to install. Therefore the installation must be carried out by a person competent to install unvented hot water systems.

It is the law that all gas appliances are installed by a competent person, i.e. Gas Safe registered personnel, in accordance with the following recommendations:-

Current Gas Safety (Installation and Use) Regulations

All current Building Regulations issued by the Department of the Environment, i.e. Approved Document L1.

Building Standards (Scotland) (Consolidation) Regulations issued by the Scottish Development Department

UK Water Regulations/Byelaws (Scotland)

Health & Safety Document No. 635 (The Electricity At Work Regulations 1989)

The installation should also be in accordance with the following British Standard Codes of Practice:-

BS 5440:1	Flues
BS 5546:	Installation of hot water supplies for domestic purposes
BS 6700:	Design, installation, testing and maintenance of services supplying water
BS 6798:	Installation of gas fired hot water boilers
BS 6891:	Gas installation
BS 7593:	Code of Practice for treatment of water in heating systems
BS 7671:	Requirements for electrical installations, IEE Wiring Regulations
BS EN 12828	Heating systems in Buildings. Design for water based heating systems
BS EN 12831	Heating systems in Buildings. Method of calculation for design heat load
BS EN 14336	Heating systems in Buildings. Installation and commissioning of water based heating systems

Reference should be made to DEFRA document 'Guide to condensing boiler installation assessment procedures for dwellings'.

If installation is in a timber framed building, refer to the Institute of Gas Engineers document IGE/UP/7.

This appliance meets the requirements of IPX4D, i.e. degree of protection against moisture.

This appliance contains no asbestos and no substances have been used in the construction process that contravene the COSHH Regulations (Control of Substances Hazardous to Health).

Failure to install this appliance correctly could lead to prosecution. It is in your own interest and that of safety to ensure that the law is complied with.

Manufacturer's instructions must **NOT** be taken in anyway as over-riding statutory obligations.

Notes:
1. Ensure that the Benchmark Checklist has been completed after the boiler has been installed and commissioned.
2. It is the law that all boiler installations are registered by the installer through the Gas Safe Gas Work Notification Scheme.
3. The boiler must only be used with Alpha CD condensing flue components.

NOTE: The boiler can be supplied ready for use with Propane (LPG).

The LPG boiler is also designed for use with a fully pumped, sealed and pressurised heating system.

In addition to the regulations and requirements stated in these installation and servicing instructions, LPG boilers must be installed in accordance with BS 5482:1 - The Installation of Propane Burning Appliances in Permanent Dwellings.

Installation pipes, cylinders and pressure regulators for LPG boilers should be fitted in accordance with BS5482:1. Bulk tank installations must comply with the requirements of the Home Office code of practice for the storage of liquefied petroleum gas at fixed installations.

LPG boilers **must not** be installed in a room or internal space below ground level, e.g. in a basement or cellar, except where at least one side is open to ground level.

LPG supply pipes must be capable of delivering the required quantity of gas in addition to the demand from any other appliances in the house. The complete installation must be tested for gas soundness against leaks.

LPG boilers have been tested and factory set for use with Propane (LPG), it should only be necessary to ensure the correct gas supply pressure of 37 mbar is available.

1.2 DIMENSIONS

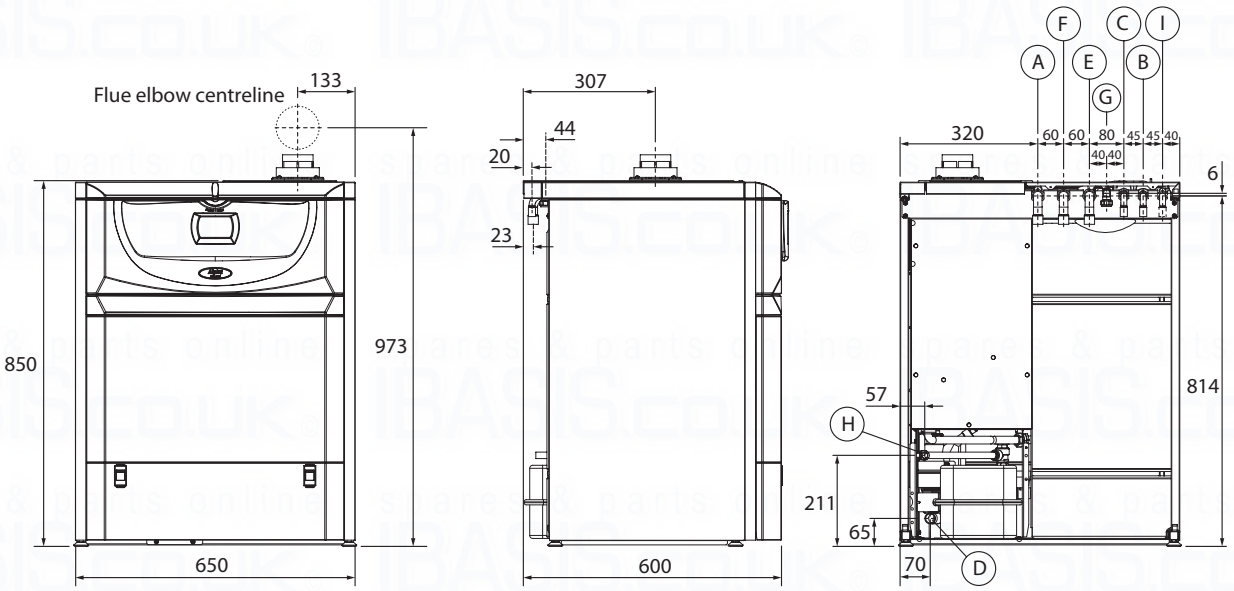

Height (mm)	Width (mm)		Depth (mm)	
850	650		600	
Connections				
Gas	Domestic hot water		Central heating	
A	B	C	E	F
3/4"	1/2"	1/2"	3/4"	3/4"

A - Gas
B - Domestic hot water outlet
C - Cold water inlet
D - Condensate outlet
E - Central heating return
F - Central heating flow
G - DHW temp/press relief valve
H - CH pressure relief valve
I - Secondary circuit (optional)

Fig. 1-1

1.3 CONNECTIONS

Gas connection:

The boiler is designed to operate with Natural gas (Cat I2H 2H - G20 - supplied at 20 mbar) or Propane gas (Cat I3P 3P - G31 - supplied at 37 mbar). Supply pipes must be the same as or larger than the 3/4" boiler fitting. Before connecting the gas line, carefully clean inside all the supply pipes to remove any residue that could impair boiler performance. Also make sure the gas corresponds to that for which the boiler is prepared (see boiler data-plate).

The gas supply pipe must be suitably dimensioned according to current regulations in order to guarantee correct gas flow to the burner even in conditions of maximum boiler output and to guarantee appliance efficiency (technical specifications).

Storage tanks (LPG):

- New LPG storage tanks may contain residual inert gases (nitrogen) that degrade the mixture delivered to the appliance causing functioning anomalies.
- Due to the composition of the LPG mixture, layering of the mixture components may occur during the period of storage in the tanks. This can cause a variation in the heating power of the mixture delivered to the appliance, with subsequent change in its performance.

Hydraulic connection:

Important: in order not to void the warranty before making the boiler connections, carefully flush the heating system (pipes, radiators, etc.) with de-scaling products to remove any deposits that could compromise correct boiler operation.

For further detail see Section 1.12.

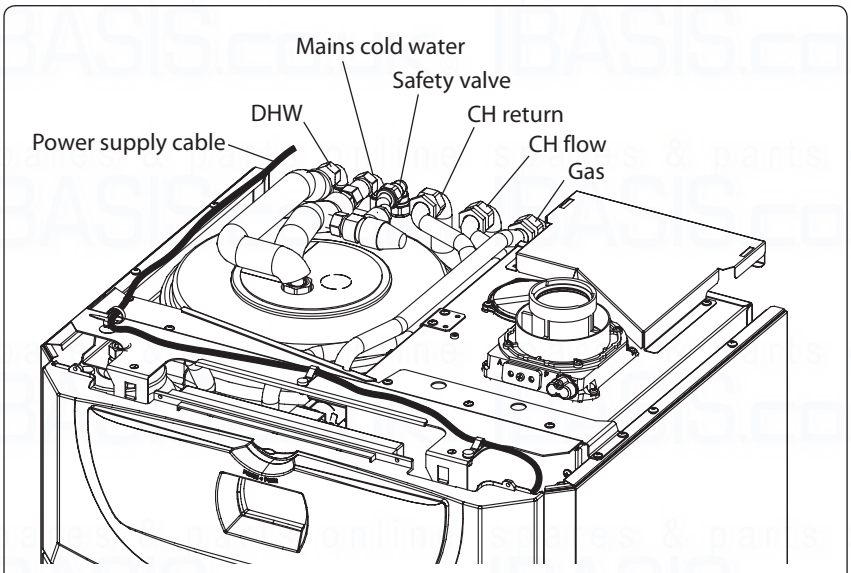

Fig. 1-2

Condensate drain:

To drain the condensate produced by the appliance, it is necessary to connect to the drainage system by means of acidic condensate resistant pipes having a diameter of at least 22 mm. The system connecting the appliance to the drainage system must be carried out in such a way as to prevent freezing of the liquid contained in it. Before appliance commissioning, ensure that the condensate can be correctly removed. Also, comply with national and local regulations on discharging waste waters.

For further detail see Section 1.11.

Electrical connection:

The boiler has an IPX5D protection rating for the entire appliance. Electrical safety of the appliance is reached only when it is correctly connected to an efficient earthing system as specified by current safety standards.

The power supply cable must be connected to a 230V ±10% / 50Hz mains supply respecting L-N polarity and earth connection ⏚, this network must also have a multi-pole circuit breaker.

1.4 REMOTE CONTROLS AND PROGRAMMABLE ROOM THERMOSTATS (OPTIONAL)

The boiler is suitable for use with programmable room timer thermostats or remote controls, which are available as optional kits.
Alpha programmable room thermostats are connected with 2 wires only. Carefully read the user and assembly instructions supplied with the kit.

Installation on low temperature system:

The boiler can directly supply a low temperature system by acting on parameter 'P66' (Service Engineers Document - Programming the PCB) and setting the flow temperature adjustment range 'P66/A' and 'P66/B'. In this situation it is good practice to insert a safety device in series with the power supply and boiler. This device is made up from a thermostat with a temperature limit of 60°C. The thermostat must be positioned on the system flow pipe at a distance of at least 2 metres from the boiler.

1.5 EXTERNAL TEMPERATURE SENSOR (OPTIONAL)

The boiler is suitable for use with the external sensor (Fig. 1-3), which is available as an optional kit. The sensor can be connected directly to the boiler electrical system and allows the maximum flow temperature to be automatically decreased when the external temperature increases, in order to adjust the heat supplied to the system according to the change in external temperature. The external sensor always operates when connected, regardless of the presence or type of room thermostat used and can work in combination with Alpha programmable thermostats. The correlation between system flow temperature and external temperature is determined by the parameters set in menu 'M5' under 'P66' according to the curves represented in the diagram (Fig. 1-4). The external sensor must be connected to terminals 38 and 39 on the boiler PCB, (Fig. 3-2).

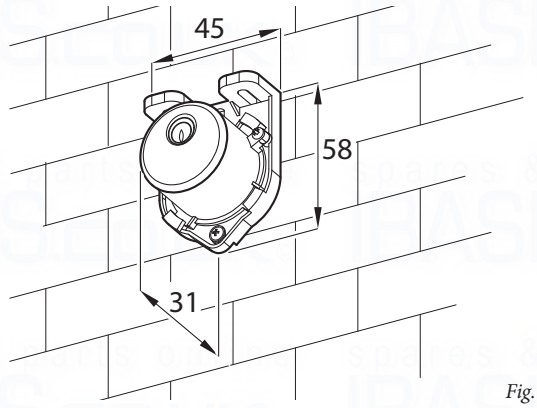

Fig. 1-3

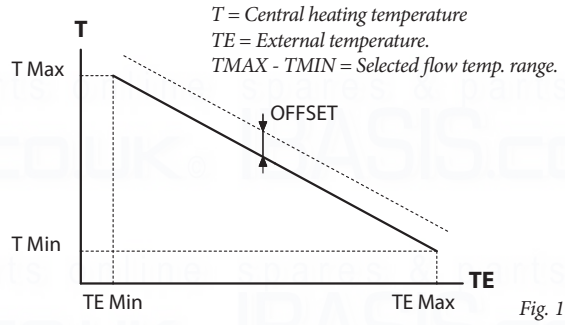

Fig. 1-4

The following controls for the InTec50CS are also available from Alpha:

Part No. 3.021395, CAR V2 ..... InTec50CS wired modulating thermostat
Part No. 3.021622, Crono 7 ..... InTec50CS wired digital thermostat
Part No. 3.021624, Crono 7RF ..... InTec 50CS wireless digital termostat

INSTALLATION

USER

MAINTENANCE

1.6 FIT THE FLUE - FIGS. -5 AND 1-6

The following procedure applies to fitting an Alpha CD Easy-Flue to both rear or side exit flue - horizontally only.

- The CD Easy-Flues are suitable for use in the flue length ranges shown in the tables in Figs 1-5 and 1-6.

  Note: Where the length is less than the minimum or more than the maximum, refer to Section 1.7.

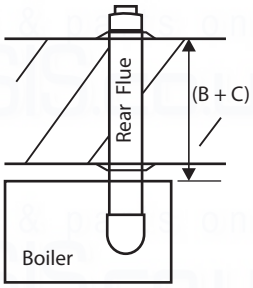

Using a single CD Easy-Flue	B + C (mm)	
	Max	Min
500 mm	355	130
1000 mm	800	590

Fig. 1-5 Rear flue

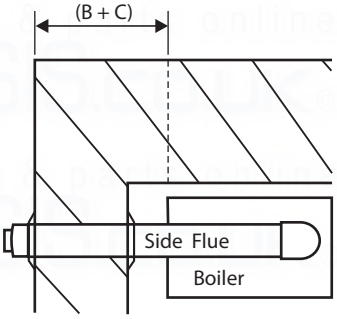

Left hand exit flue

Using a singleCD Easy-Flue	B + C (mm)	
	Max	Min
500 mm	143	-
1000 mm	742	378

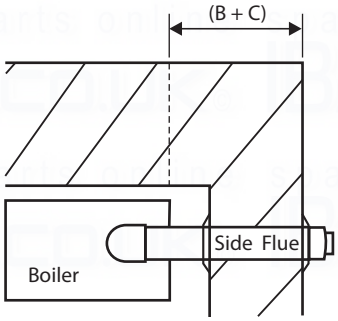

Right hand exit flue

Using a single CD Easy-Flue	B + C (mm)	
	Max	Min
500 mm	527	302
1000 mm	972	762

Fig. 1-6 Side flue

- Determine the overall length (L) of flue required, (see Fig. 1-7) as follows:-

  Rear exit L = wall thickness (B) + distance between boiler and wall (C) + 230 mm

  left exit L = wall thickness (B) + distance between boiler and wall (C) + 442 mm

  Right exit L = wall thickness (B) + distance between boiler and wall (C) + 58 mm

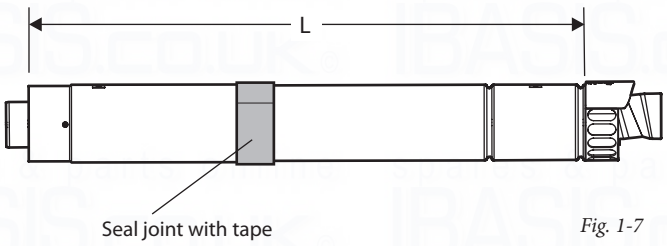

Fig. 1-7

- Adjust the telescopic section of the flue to the distance 'L', ensuring that the two labels marked 'TOP' are aligned, then seal and secure the joint between the ducts with the sealing tape supplied.

  Note: Always ensure that there is a minimum overlap of 25 mm when fully extending the telescopic section.

- Pass the flue assembly through the wall (from inside or outside).

Note: Internal fitting - If there is no access to make good the outside wall, locate the outside (black) flue sealing collar onto the outer duct of the flue immediately before the terminal grille onto the location provided. Push the flue assembly through the 130 mm flue hole, so that the collar completely passes through the wall. Then pull the flue assembly back into the correct position. Visually check that the collar is sealing the outside wall and that it is not restricting any of the openings of the flue terminal. See Fig. 1-8.

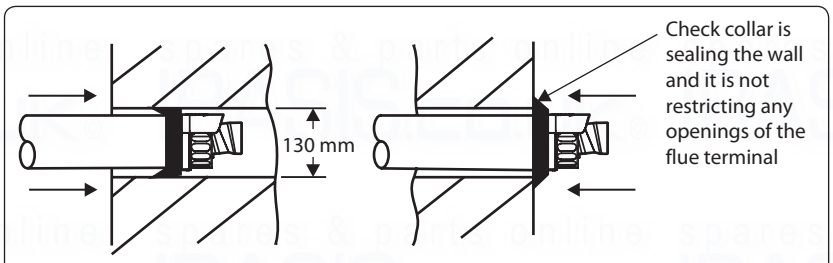

Fig. 1-8 - Fitting the flue from inside

- Position the smaller Easy-Flue 40 mm clamp (with seal) supplied, over the bend. Fit the bend to the boiler and rotate to the correct position. Secure in position using the clamp. Ensure the clamp is located centrally over both the bend and boiler adaptor.
- Fit the inside (white) flue sealing collar over the Easy-Flue. If it was not previously fitted, fit the outside (black) flue sealing collar onto the flue immediately before the terminal grille onto the location provided.
- Slide the larger Easy-Flue 45 mm clamp over the outer duct and pull the flue assembly towards the bend, locating the inner duct into the seal joint on the bend. Ensure the labels marked 'TOP' are positioned at the top before securing the flue assembly to the bend with the clamp (three screws) located centrally over the joint.

Note: Check the flue terminal protrudes 120 mm out of the wall and the inner duct of the terminal is positioned correctly (see Fig. 1-9).

- Make good the inside wall by pushing the inside flue sealing collar upto the wall.

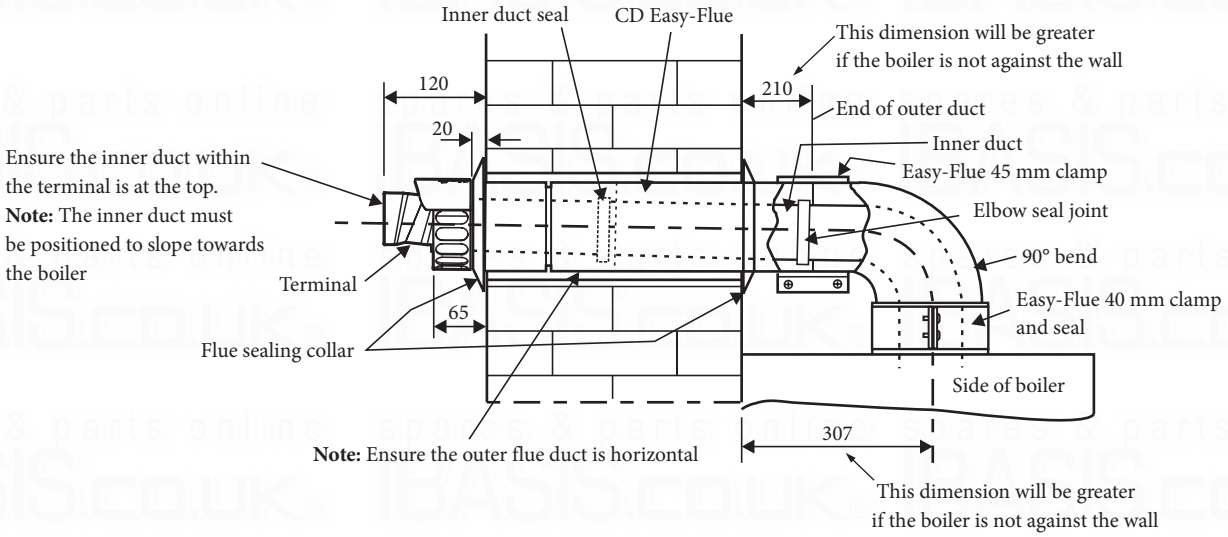

Fig. 1-9 - Rear flue

1.7 REDUCING THE FLUE - FIG. 1-10

When the flue length required is less than the minimum stated in Section 1.6, paragraph 1, refer to Fig. 1-10.

Discard the first telescopic section (not the section with the terminal) of the Easy-Flue 1000 mm or 500 mm and cut to the required length.

Note: Ensure that all cuts are square and free from burrs.
Once assembled with the components pushed home, the flue is fully sealed.

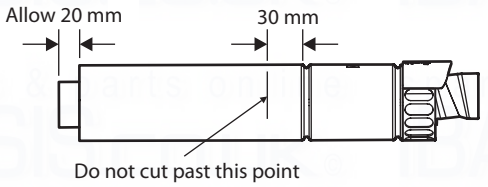

Fig. 1-10

1.8 EXTENDING THE FLUE - FIG. 1-11

Note: The flue assembly length must not exceed the maximum length stated, including the equivalent lengths of any extensions, bends etc. used for plume management components. InTec boilers must not exceed the maximum of an equivalent horizontal flue length of 12 m.

- When the flue length required is more than the maximum stated in Section 1.6, paragraph 1, refer to the table below and Fig. 1-6.

Rear Flue length (B + C)	Side Flue length (B + C)	Comments
Up to maximum:- 11.885 m	Up to maximum:- 11.805 m	Alpha CD 750 mm flue extension (Part No. 6.2000750) or 1000 mm extension (Part No. 6.2001050) is required to extend the range of telescopic flue. Refer to Section 1.8 for instructions on how to extend the flue. **Note:** A 130 mm flue hole (127 mm core drill) may be required in the wall. This is when the extended flue is passed through the wall.

Additional support brackets are required when extending the flue. These are available from Alpha, Part No. 6.1000355.

- Use the template (supplied with the boiler) to mark the required flue position, ensure the slope towards the boiler is correct.
- Determine the overall flue length as described in Section 1.6, paragraph 2 to determine the number of Alpha CD 750 or 1000 mm flue extensions required.
- Assemble the flue extensions together by locating the inner duct into the seal joint and secure each extension together with the extension clamps supplied (three screws). Ensure that the clamps are positioned centrally over the joints.

  Note: If it is required to cut an extension, **DO NOT** cut the end of the inner duct that incorporates the seal joint. Ensure the inner duct end without the seal joint is cut so that it is 20 mm longer than the outer duct.

  Ensure that all cuts are square and free from burrs.

  Once assembled with the components pushed home, the flue is fully sealed.
- Adjust the telescopic section of the Easy-Flue to the required length and secure the Easy-Flue with the sealing tape supplied. Fit the Easy-Flue to the extensions by locating the inner duct into the seal joint and secure with the clamp (three screws), ensuring it is located centrally over the joint.
- Mark the end of the flue assembly 'TOP' where it is connected to the boiler, so that the 'TOP' of the flue terminal is aligned with the 'TOP' at the boiler end of the flue assembly.
- Pass the complete flue assembly through the wall.
- Position the smaller Easy-Flue 40 mm clamp (with seal) supplied, over the bend. Fit the bend to the boiler and rotate to the correct position and secure in position. Ensure the seal is located centrally over both the bend and boiler adaptor. If the inside sealing collar (white) is being used to make good the inside wall, then it will need to be fitted before assembling the flue.
- Slide the larger Easy-Flue 45 mm clamp (two screws) over the outer duct and pull the flue assembly towards the bend, locating the inner duct into the seal joint on the bend.
- Secure the flue assembly to the bend with the clamp ensuring it is positioned centrally over the joint, ensuring the 'TOP' marked on the outer duct is positioned at the top.

  Note: Check the flue terminal protrudes 120 mm out of the wall and that the inner duct of the terminal is positioned correctly, i.e. the inner duct within the terminal is at the top. See Fig. 1-11 or 1.12.
- Make good the outside wall by fitting the outside sealing collar (black) onto the location provided immediately behind the flue terminal grille. Make good the inside wall using the inside sealing collar (white) if required.

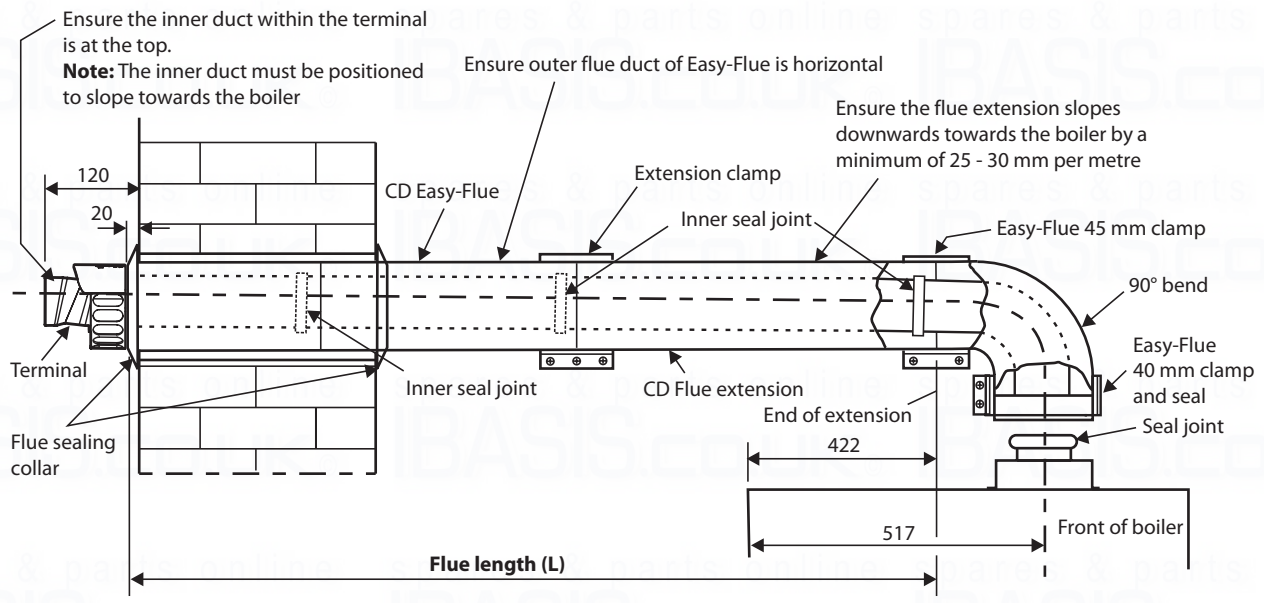

Fig. 1-11 - Left side flue

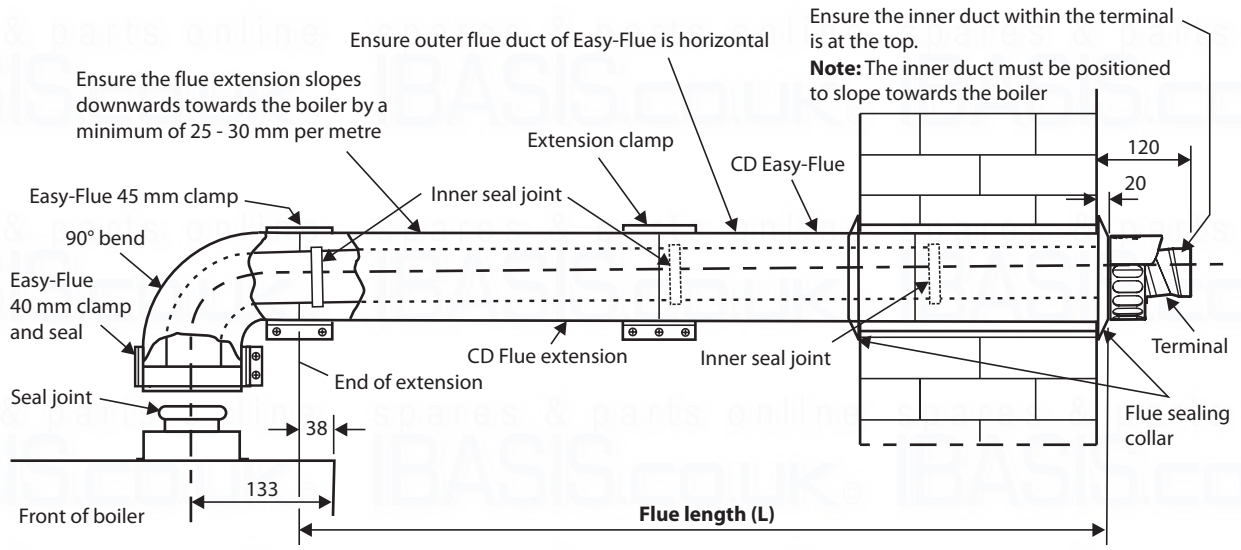

Fig. 1-12 - Right side flue

1.9. FIT PLUME MANAGEMENT COMPONENTS - (OPTIONAL)

The following procedures detail the options for management of the exhaust flue gas/plume emitted from the terminal.

- The terminal supplied with the Easy-Flue can be altered to divert exhaust flue gas/plume at an angle.

  This can be achieved by simply turning the end section of the terminal to the desired angle.

- The CD Easy-Flue can be converted to allow the inner flue duct to be extended so as to position the terminal in an area where the exhaust flue gas/plume will not cause a nuisance. This can be done before or after installation of the flue, providing there is access to the terminal from outside.

  a. Remove the screws (1 in Fig. 1-13) securing the terminal and remove the terminal by pulling it from the flue assembly. Remove the screw (2 in Fig. 1-13) securing the terminal end section and remove the end section from the terminal.

  b. Locate a 93° Plume Management bend into the flue assembly and rotate it to the direction required.

  c. Connect to the 93° bend the required Plume Management components as detailed and refer to Fig. 1-14.

  Notes:

  - The wall support brackets must be used to secure the Plume Management pipework to the wall and prevent disconnection of the 93° bend from the flue assembly or any other component.
  - Each joint must be secured with one of the screws provided to prevent accidental disconnection.
  - Ensure there is always a slight slope towards the flue assembly fitted in the wall and there is no part of the plume management pipework where condensate/rain will collect and cause a blockage or any restriction.

  d. Terminate the Plume Management pipework by fitting the terminal end section (push-fit) previously removed. Refer to Fig. 1-13.

  e. The Plume Management components available for extending the inner flue duct are as follows:-

  Plume Management 93° bend 60 mm dia. (each 93° bend equivalent to 1.3 m flue length)

  Plume Management 45° bend 60 mm dia. (each 45° bend equivalent to 0.9 m flue length)

  Plume Management 1000 mm extension 60 mm dia. (equivalent to 1 m flue length)

  60 mm dia. wall bracket

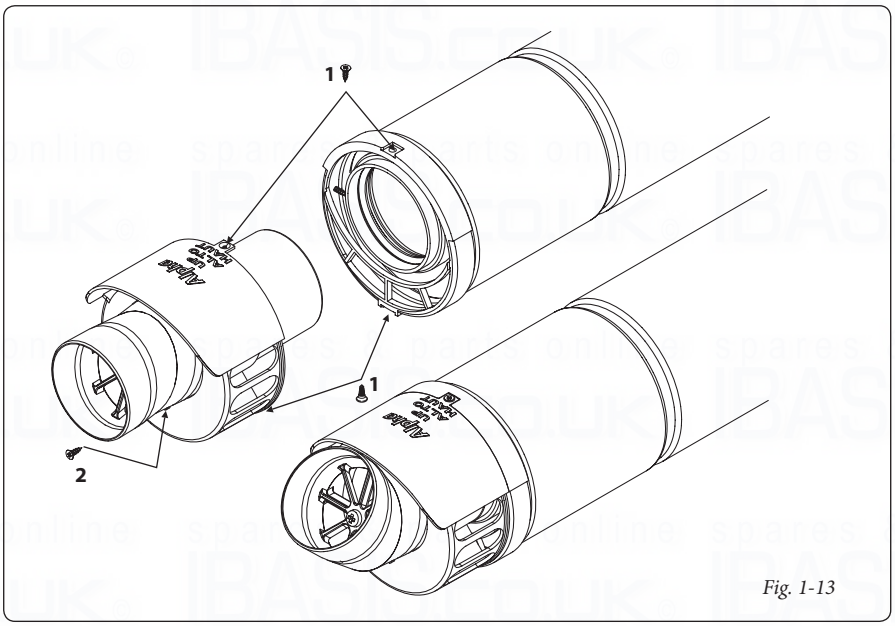

Fig. 1-13

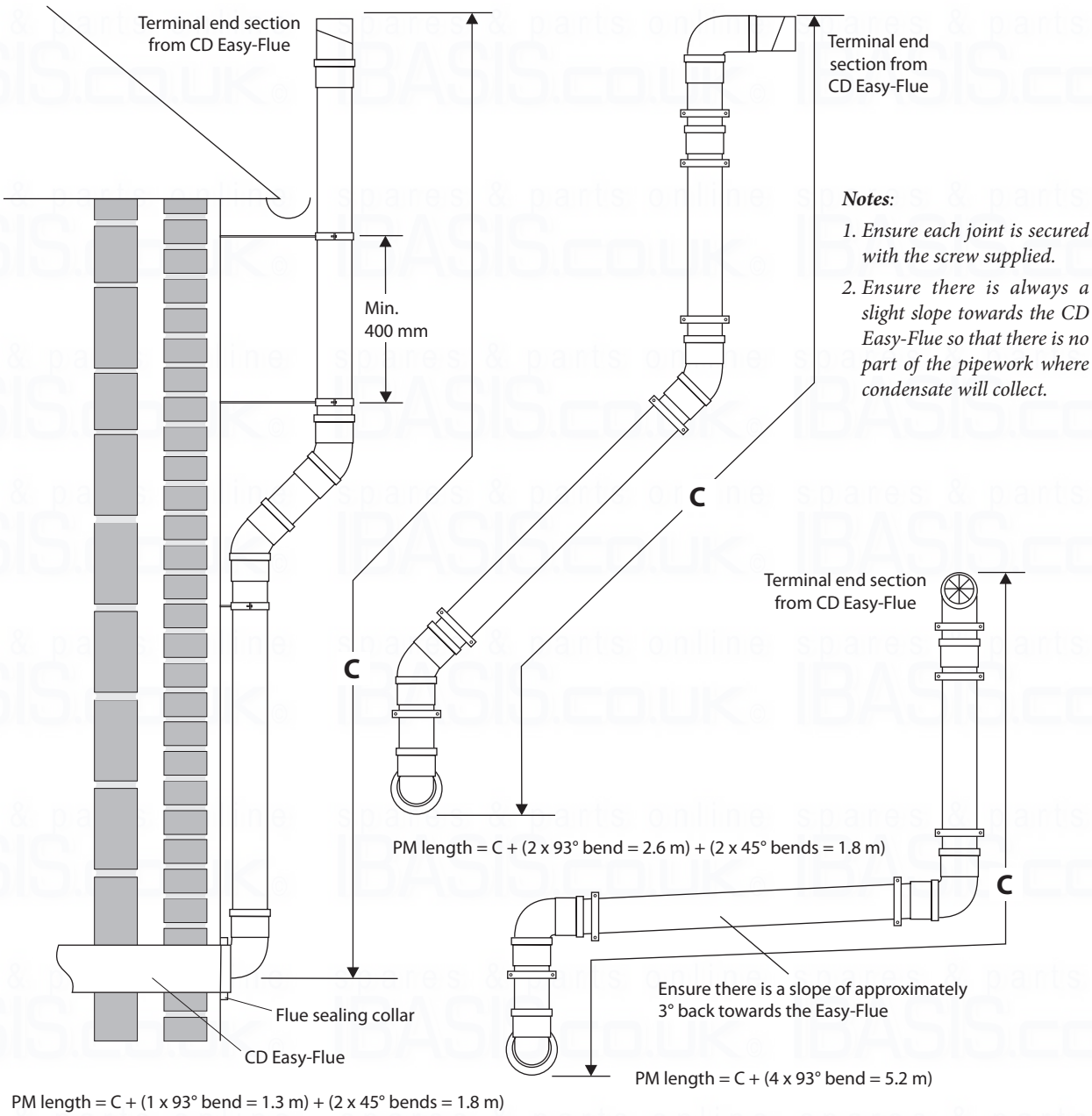

Notes:

1. *Ensure each joint is secured with the screw supplied.*
2. *Ensure there is always a slight slope towards the CD Easy-Flue so that there is no part of the pipework where condensate will collect.*

Note: *The equivalent horizontal flue assembly length + the equivalent plume management length (PM length) must not exceed the maximum flue length stated for the boiler, i.e. The boiler maximum equivalent flue length must not exceed 12 metres.*

Fig. 1-14

1.10. VERTICAL FLUE OPTIONS

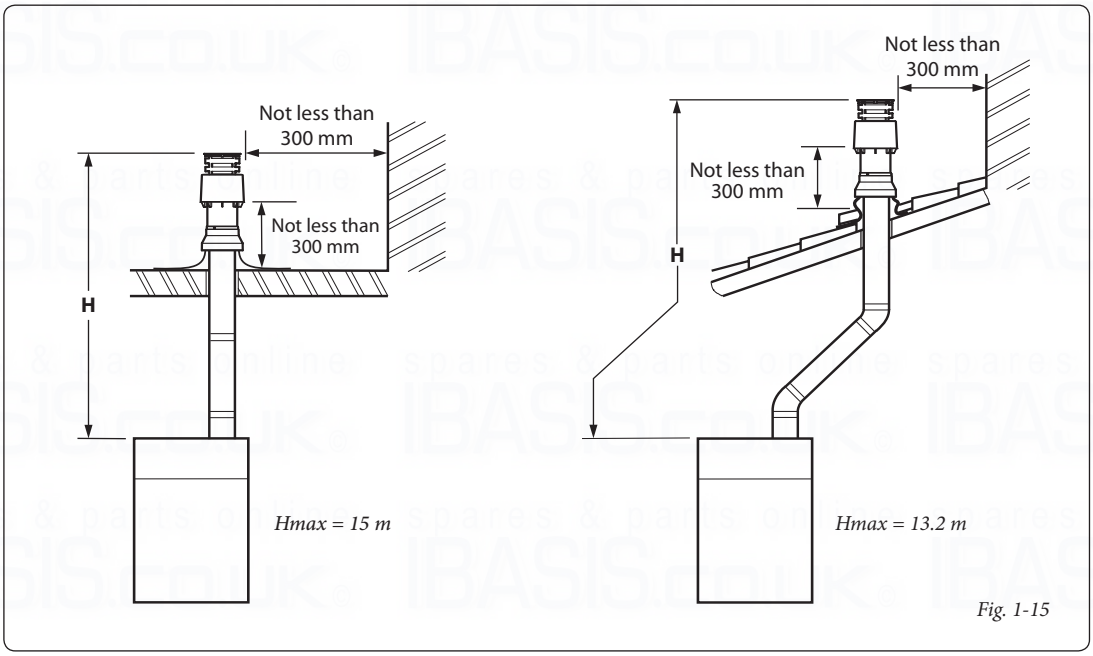

Fig. 1-15

1.11 DISPOSAL OF CONDENSATE.

Provision must be made for the safe disposal of condensate produced by the flue gases of the Alpha InTec boilers and reference should be made to BS 6798 for the requirements on the disposal of condensate.

The boilers incorporate a condensate trap which has a seal of 75 mm, therefore no additional trap is required.

The condensate should ideally be discharged internally into an internal waste pipe (washing machine/sink waste) or soil pipe to avoid the possible risk of freezing. The pipework must be in 22 mm pipe.

External pipe runs should be avoided, but if it is necessary, the pipework should be protected from the risk of freezing with waterproof insulation and the length should be kept to a maximum of 3 m and the condensate pipework should be increased to a minimum of 32 mm diameter. Termination should be into an external gulley or soakaway as shown in Figs. 1.16 and 1.17.

Note: All pipework must have a continuous fall (see Figs. 1.16 and 1.17) from the boiler and must be of an acid resistant material such as plastic waste pipe. (copper or steel is not suitable).

It should be noted that the connection of a condensate pipe to a drain may be subject to local building control requirements.

Optional Condensate Trace Heating Kit

An optional Alpha InTec trace heating kit is also available to prevent the condensate from freezing.

The control of this kit works with a unique patented design using the boiler PCB to control the trace heating. The outside weather probe measures the external temperature, activating the trace heating cable only when the boiler is in operation and producing condensate. This feature together with the latest technology variable resistance heating cable ensures only a small amount of electrical energy is used.

If the external temperature drops below 2°C and the boiler is on, the relay PCB is operated and voltage is supplied to the trace heating wire causing it to heat up and prevent the condensate from freezing. When the outside temperature rises to 4°C or the boiler pump stops, the trace heater is switched off. The connection of the outside weather probe supplied with this kit also enables the weather compensation feature on the boiler.

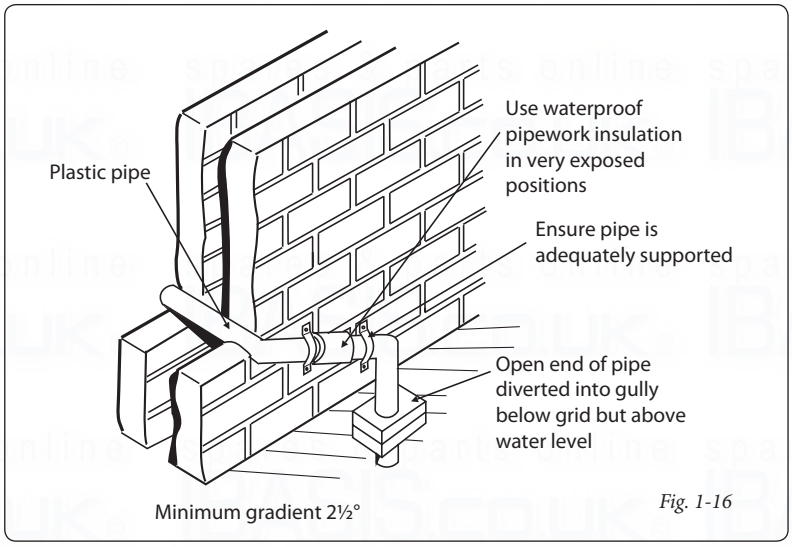

Fig. 1-16

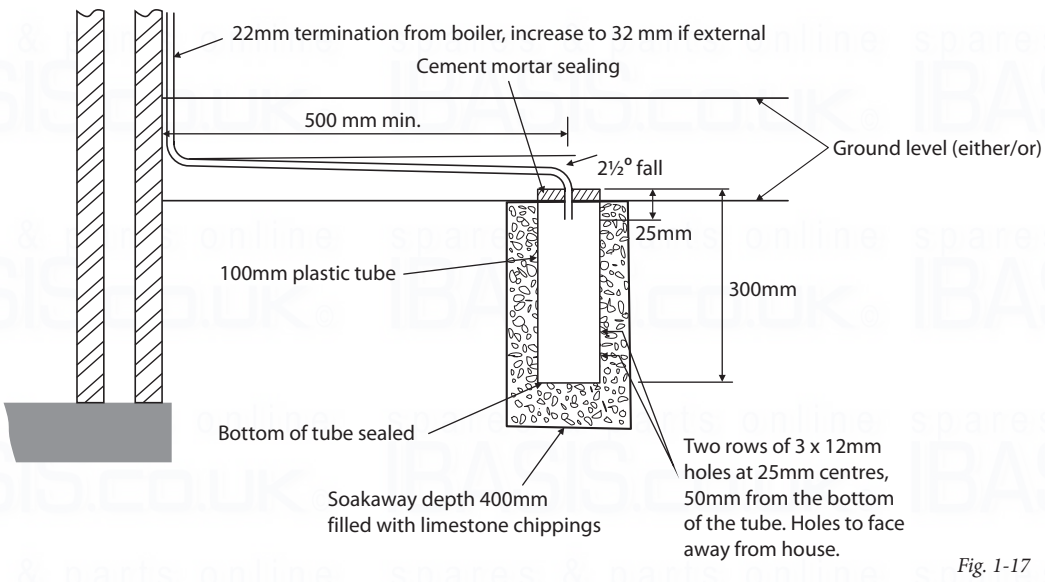

Fig. 1-17

1.12 FLUSH THE SYSTEM.

It is essential that the central heating system is thoroughly cleaned and flushed when fitting an Alpha InTec boiler. Failure to do so will invalidate the warranty.

If a cleaning agent and inhibitor are used, they must be applied in accordance with their manufacturers instructions. Only products from Fernox and Sentinel are acceptable for use with the Alpha InTec boilers. Further information can be obtained from Fernox (Tel: 0870 870 0362) or Sentinel (Tel: 0151 420 9563).

The system should be flushed in accordance with BS 7593 and BS EN 14336. The following procedures are recommended:

- Installing onto a new system:-
  Fill the system, vent at automatic air vents and radiators.
  Check for leaks.
  Drain the system.
  If required, chemically clean the system as instructed by the recommended cleaner manufacturer.
  Note: Ensure that the system is flushed to remove any remains of the cleaner.
  If chemical cleaner is not used to clean the system:-
  a Refill the system.
  b Switch on the boiler and allow the system to heat up to the normal operating temperature.
  c Switch off the boiler and drain the system while the water is still hot.
  d Refill the system and check for leaks.
  As required, add the recommended inhibitor to the system as instructed by the inhibitor manufacturer.
- Installing onto an existing system, clean the system before fitting the new boiler:-
  If the old boiler is still working:-
  a Switch on the boiler and allow the system to heat up to the normal operating temperature.
  b Switch off the boiler and drain the system while the water is still hot.
  c Refill and chemically clean the system as instructed by the recommended cleaner manufacturer.
  d Ensure the system is flushed to remove any remains of the cleaner.
  e Fit the new boiler.
  If the old boiler is not working:-
  a Drain the system.
  b Remove the old boiler.
  c Flush the system through.
  d Fit the new boiler.
  e Refill and chemically clean the system as instructed by the recommended cleaner manufacturer.
  f Ensure the system is flushed to remove any remains of the cleaner and check for leaks.
  As required, add the recommended inhibitor to the system as instructed by the inhibitor manufacturer.

1.13 FILL THE SYSTEM.

The boiler is fitted with two automatic air vents (see Fig. 1.18), ensure that the vents are always open.
Open the central heating flow and return valves.

Open the fill point valves on the filling loop until water is heard to flow.

To remove the air - Vent each radiator in turn, starting with the lowest in the system.

It is important that the pumps are properly vented to avoid them running dry and damaging the bearings. Unscrew and remove the cap from the centre of the pump. Using a suitable screwdriver rotate the exposed spindle about half a turn, then replace the cap.

Check the operation of the pressure relief valve (see Fig. 1.18) by turning the head anti-clockwise until it clicks. The click is the valve lifting off its seat allowing water to escape from the system - check that this is actually happening.

Continue to fill the system until the pressure gauge indicates 1.0 bar. Close the fill point valve and check the system for water soundness, rectifying where necessary. Disconnect the filling loop from the mains supply.

Water may be released from the system by manually opening the drain point (see Fig. 1.18) until the system design pressure is obtained. The system design pressure (cold) should be between 0.75 and 1.25 bar.

Open the cold water mains inlet valve (see Fig. 1.18). Turn on all hot water taps and allow water to flow until no air is present. Turn off taps.

Ensure that the condensate trap has been filled with water. Refer to Section 1.11.

1.14 CIRCULATION PUMP (FIG. 1-18).

The Alpha Intec boilers are supplied with 2 types of pump, both with variable speed adjuster. These settings are suitable for most systems.

- **Boiler pump.** The motor has a 3- speed control. The boiler does not operate correctly with the control set at the slowest speed. For optimal functionality, use the pump at maximum speed (max. head).

  Pump release. If the pump becomes stuck after a long period of inactivity, it must be released. Loosen the front cap, making sure that the water that escapes cannot cause injury/damage to persons/objects and turn the motor shaft very carefully using a screwdriver so as not to damage the shaft. Once the pump has been released, close the vent cap.

- **Zone 1 pump.** The pump is ideal for the requirements of each heating system in a domestic and residential environment. In fact, the pump is equipped with electronic control that allows the advanced functions to be set.

  Programme P (ΔP-V) - Proportional curve (Green LED). This allows the head to be proportionally reduced as the system heat demand decreases (flow rate reduction). Due to this function, the electrical consumption of the pump will be reduced: the power used by the pump decreases together with the pressure level and flow rate. With this setting, the pump guarantees optimal performance in most heating systems, thereby being particularly suitable in single-pipe and two-pipe installations. Any noise of the water flow in the pipes, valves and radiators is eliminated by reducing the head.

  Programmes C3 and C4 (ΔP-C) - Constant curve (White or Orange LED). The pump maintains a constant head as the system heat demand decreases (flow rate reduction). With these settings, the pump is suitable for all floor systems where all the circuits must be balanced for the same drop in head.

  MIN-MAX Program (Blue LED). The pump is distinguished by adjustable operating curves by positioning the selector in any point between the Min and Max positions, thereby satisfying any installation requirement (from a simple single-pipe to more modern and sophisticated systems) and always guarantee optimum performance. The precise working point can be selected in the entire field of use by gradually adjusting the speed.

  Adjustments. Turn the selector and set it on the desired curve to adjust the pump.

  Diagnostics in real time: a bright LED (in various colours) provides information regarding the pump operating status.

Programme	LED colour
P (ΔP-V)	green
C3 (ΔP-C) - H=3 m	white
C4 (ΔP-C) - H=4 m	orange
Min - Max	blue
ATTENTION! The pump is blocked but still live.	red

Possible pump release. A stuck pump is indicated by a fixed red LED. Turn the selector up to the MAX position, disconnect and reconnect the power to restart the automatic release process. The pump will then activate the procedure that will last a maximum of 15 minutes and the LED will flash upon each restart. It then turns blue for a few seconds and goes back to red if the attempt to restart is not successful. Once the process is complete, set the selector back to the desired curve and if the problem has not been resolved, perform the manual release procedure as follows.

- Disconnect the power to the boiler (the LED goes off).
- Close the system flow and return and let the pump cool down.
- Empty the system circuit via the relative valve.
- Remove the motor and clean the impeller.
- Once the release is complete, remount the motor.
- Fill the primary circuit; restore the power of the boiler and set the desired curve.

Important: Take care if the system has been in operation as the water may be **HOT**.

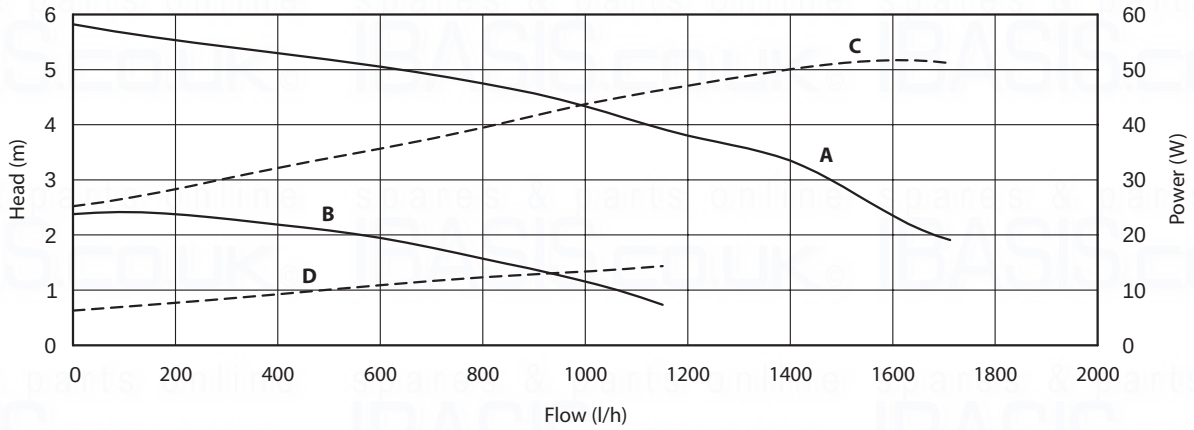

A = Head available to the system with pump at maximum speed
B = Head available to the system with pump at minimum speed
C = Pump power at maximum speed
D = Pump power at minimum speed

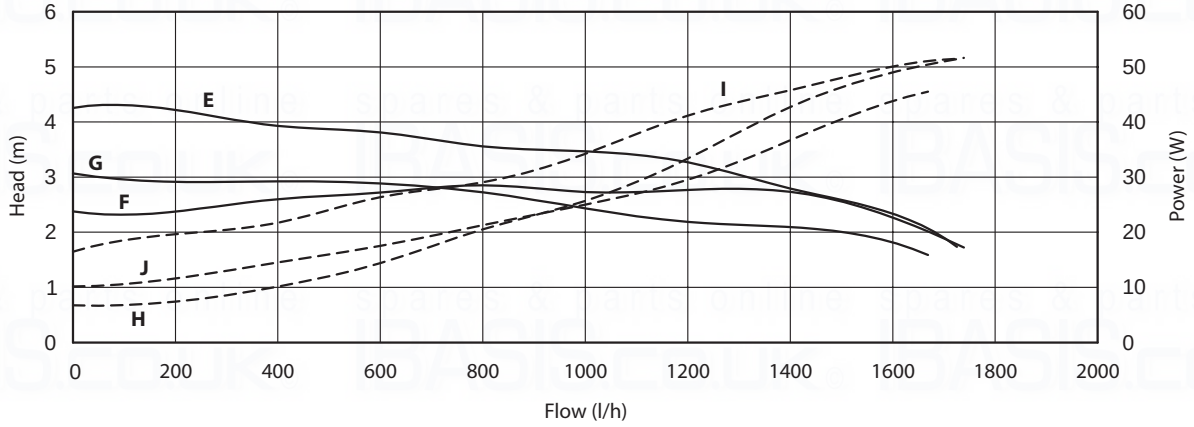

E = Head available to the system with pump selector in position C4 (standard setting)
F = Head available to the system with pump selector in position P
G = Head available to the system with pump selector in position C3
H = Pump power with selector in position P
I = Pump power with selector in position C4 (standard setting)
J = Pump power with selector in position C3

Fig. 1-18

1.15 BOILER COMPONENTS

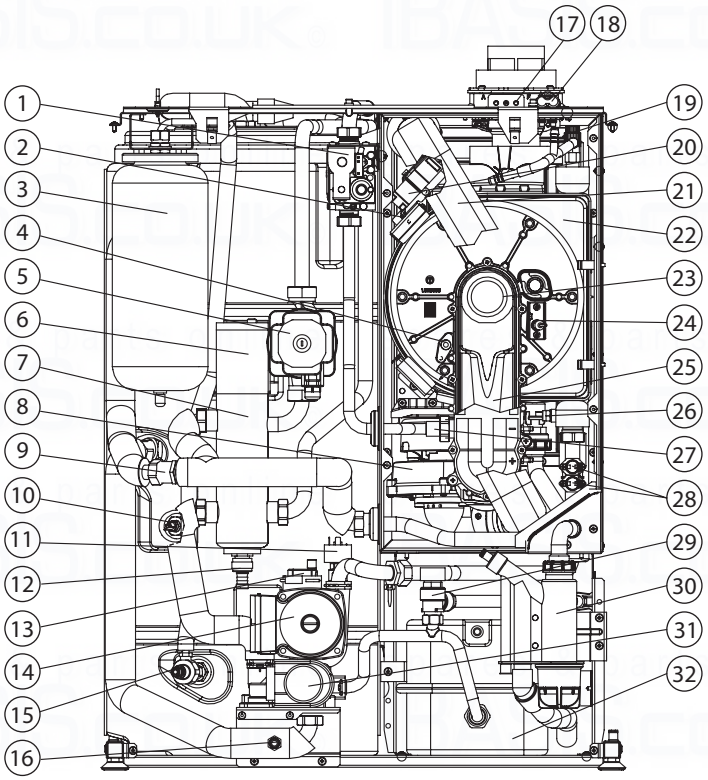

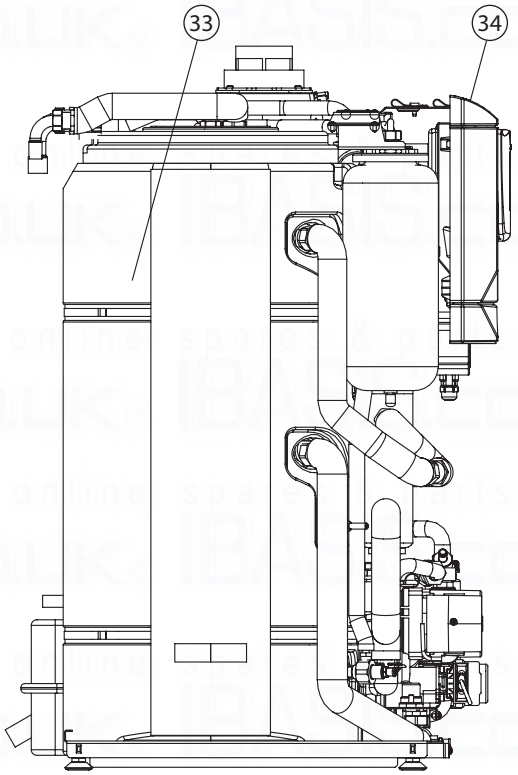

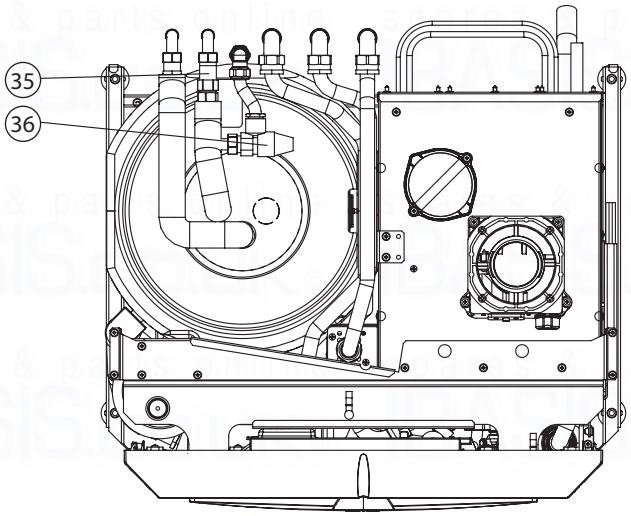

1 - *Gas valve*
2 - *Flue thermostat*
3 - *DHW expansion vessel (3 litre)*
4 - *Flame sensing electrode*
5 - *System pump*
6 - *Automatic air vent*
7 - *Hydraulic manifold*
8 - *Fan*
9 - *Check valve*
10 - *Domestic hot water temperature sensor*
11 - *System pressure switch*
12 - *Manifold drain tap*
13 - *Automatic air vent*
14 - *Boiler pump*
15 - *Hot water store drain tap*
16 - *System drain tap*
17 - *Flue gas sampling point*
18 - *Pressure test points*
19 - *Manual air vent*
20 - *Ignition generator*
21 - *Air supply pipe*
22 - *Condensing heat exchanger*
23 - *Burner*
24 - *Ignition electrode*
25 - *Venturi*
26 - *Flow sensor*
27 - *Burner injector*
28 - *Overheat thermostats*
29 - *System safety valve (3 bar)*
30 - *Condensate trap*
31 - *Diverter valve*
32 - *System expansion vessel (11.7 litre)*
33 - *Hot water cyliner assembly (53 litre)*
34 - *Control panel*
35 - *Inlet filter, flow regulator, check valve fitting*
36 - *domestic hot water safety valve (8 bar)*

Fig. 1-19

2 USER INSTRUCTIONS.

2.1 SERVICING.

Important: the boiler requires periodical maintenance and regular checks of energy efficiency in compliance with national, regional or local provisions in force.
This ensures that the optimal safety, performance and operation characteristics of the boiler remain unchanged over time.
We recommend a yearly cleaning and maintenance contract with your Service engineer.

2.2 GENERAL WARNINGS.

Use of the boiler by unskilled persons or children is strictly prohibited.
For safety purposes, check that the flue terminal is not blocked.

If temporary shutdown of the boiler is required, proceed as follows:
a) drain the water system if anti-freeze is not used.
b) shut-off all electrical, water and gas supplies.

In the case of work or maintenance to structures located in the vicinity of ducting or devices for flue extraction and relative accessories, switch off the appliance and on completion of operations ensure that a qualified technician checks efficiency of the ducting or other devices.
Never clean the appliance or connected parts with highly flammable substances.
Never leave containers and flammable substances in the same environment as the appliance.

- **Attention:** the use of components that employ electrical power requires some fundamental rules to be observed:
  - do not touch the appliance with wet or moist parts of the body; do not touch when barefoot;
  - never pull electrical cables or leave the appliance exposed to atmospheric agents (rain, sunlight, etc..);
  - the appliance power cable must not be replaced by the user;
  - in the event of damage to the cable, switch off the appliance and only contact qualified staff for replacement;
  - if the appliance is not to be used for a certain period, disconnect the main power switch.

N.B.: the temperatures indicated by the display has a tolerance of +/- 3°C due to environmental conditions that cannot be blamed on the boiler.

2.3 CONTROL PANEL.

Key

- ⏻ - *Stand-by / On Button*
- **A** - *Summer* ( ) *and winter* ( ) functioning mode selection button
- **B** - *DHW priority button* ( )
- **C** - (RESET) */menu exit* (ESC) reset button
- **D** - *Menu entry button* (MENU)*/ data confirmation* (OK)
- *1* - *Domestic hot water temperature selector switch*
- *2* - *Domestic hot water temperature set*
- *3* - *Central heating temperature selector switch*
- *4* - *Central heating temperature set*
- *5* - *Presence of anomalies*
- *6* - *Display of boiler operating mode*
- *8* - *Flame presence symbol and relative output scale*
- *9 and 7* - *Primary heat exchanger output water temperature*
- *10* - *Boiler in stand-by*
- *11* - *Boiler connected to remote control (Optional)*
- *12* - *Functioning in summer mode*
- *13* - *Anti-freeze function in progress*
- *14* - *Functioning in winter mode*
- *15* - *Domestic hot water priority functioning active*
- *16* - *Presence of external connected devices*
- *17* - *Display of menu items*
- *18* - *Functioning with external temperature probe active*
- *19* - *Display of data confirmation or menu access*
- *20 and 7* - *External temperature display with external probe connected (optional)*
- *21* - *Display of reset or exit menu request*
- *22* - *Chimney sweep function in progress*
- *23* - *Boiler pressure gauge*
- *24* - *Multi-function display*

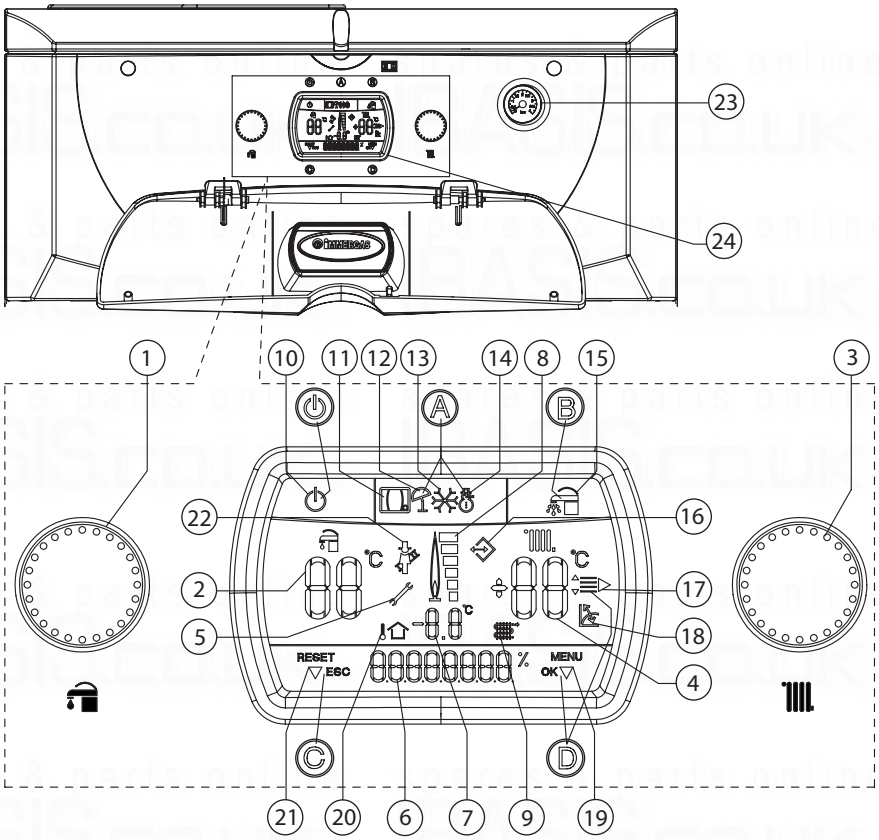

Fig. 2-1

2.4 OPERATING MODES.

Below is a list of boiler operating modes that appear on the status display (item 6 in Fig. 2-1) together with a brief description.

Display (item 6)	Description of operating mode
SUMMER	Summer operating mode without request in progress. Boiler in stand-by for domestic hot water request.
WINTER	Winter operating mode without request in progress. Boiler in stand-by for domestic hot water or central heating request.
DHW ON	Domestic hot water mode in progress. Boiler operating, domestic hot water heating in progress.
CH ON	Central heating mode in progress. Boiler operating, central heating in progress.
F3	Anti-freeze mode in progress. Boiler operating to restore the minimum safety temperature against boiler freezing.
DHW OFF	With domestic hot water priority disabled (item 15 sysmbol off), the boiler only operates in central heating mode for 1 hour, however keeping the domestic hot water store at minimum temperature (20°C), after which the boiler goes back to the normal operation, previously set.
F4	Post ventilation in progress. Fan in function after a request for domestic hot water or central heating in order to evacuate residual fumes.
F5	Post circulation in progress. Pump operating after a request for domestic hot water or central heating in order to cool the primary circuit.
P33	The optional environment thermostat (TA) not working, the boiler functions all the time in central heating mode. (Can be activated through the 'Customisation' menu. It allows activation of the central heating even if the TA is out of order).
STOP	Reset attempts finished. Wait for 1 hour to re-acquire 1 attempt. (See Ignition failure on following page).
ERR xx	Fault present with relative error code. The boiler does not work. (see Section 2.6, fault signals).
SET	During rotation of the domestic hot water temperature selector switch (item 1 Fig. 2-1) the adjustment status of the domestic hot water temperature is displayed.
SET	During rotation of the central heating selector switch (item 3 Fig. 2-1) the adjustment status of the boiler flow temperature for central heating is displayed.
SET	In presence of the external probe (optional) replace the 'SET' item. The value that appears is the correction of the flow temperature with respect to the functioning curve set by the external probe. See OFFSET on external probe graphics (Fig. 1-4).
F8	System deaeration in progress. During this phase, which lasts 18 hours, the boiler pump is started at pre-established intervals, thus allowing deaeration of the central heating system.

2.5 USING THE BOILER.

Refer to Fig. 2-1.

Before lighting make sure the central heating system is filled with water and that the pressure gauge (item 23) indicates a pressure of 1 - 1.2 bar;

Open the gas cock upstream from the boiler.

With the boiler off, only the stand-by symbol (item 10) appears on the display. By pressing the (⏻) button the boiler switches on.

Once the boiler is on, by pressing button 'A' repeatedly, the operating mode changes and passes alternatively from summer ( ) and winter ( ) operating modes.

- **Summer ( ):** in this mode the boiler operates only to provide domestic hot water. The temperature is set using the selector switch (item 1) and the relative temperature (item 2) is indicated on the display and the 'SET' indication appears (Fig. 2-2). By turning the selector switch (item 1) in a clockwise direction the temperature increases and in an anti-clockwise direction it decreases.

Set domestic hot water temperature

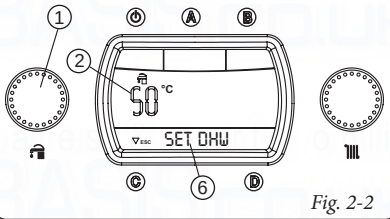

Fig. 2-2

During the heating of the domestic hot water 'DHW ON' appears on the status display (item 6) and at the same time as the burner lights the flame presence display switches on (item 8) together with the output scale next to it. The displays (items 7 and 9) indicate the instantaneous outlet temperature from the primary heat exchanger. As shown in Fig. 2-3.

Summer operating mode with domestic hot water only

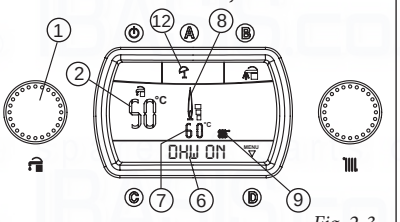

Fig. 2-3

- **Winter ( ):** in this mode the boiler operates to provide both domestic hot water and central heating. The temperature of the domestic hot water is always adjusted using the selector switch (item 1), the central heating temperature is adjusted using the selector switch (item 3) and the relative temperature is indicated on the display (item 4) and the 'SET' appears on the status display (item 6). As shown in Fig. 2-4.

By turning the selector switch (item 3) in a clockwise direction the temperature increases and in an anti-clockwise direction it decreases.

Set the central heating flow temperature

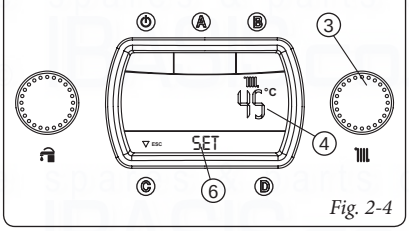

Fig. 2-4

During the request for central heating 'CH ON' appears on the status display (item 6) and at the same time as burner lights the flame presence display switches on (item 8) together with the output scale next to it. The displays (items 7 and 9) indicate the instantaneous outlet temperature from the primary heat exchanger. As shown in Fig. 2-5.

Winter operating mode with domestic hot water and central heating

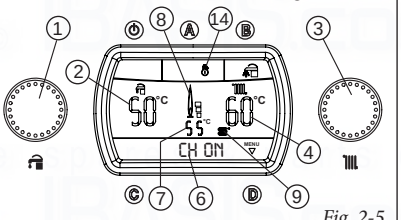

Fig. 2-5

In the central heating mode, if the temperature of the water contained in the system is sufficient to heat the radiators, the burner will shut off and only the pump will operate.

- **Domestic hot water priority function** By pressing button 'B' the DHW priority function is deactivated, which is marked by the switch-off of the symbol (item 15 in Fig. 2-1) on the display. The disabled function keeps the water contained in the storage tank at a temperature of 20°C for 1 hour, giving the priority to central heating.
- **Functioning with external sensor (Fig. 2-6) optional.** In the case of a system with optional external sensor, the boiler flow temperature for central heating is managed by the external sensor depending on the external temperature measured (Par. 1.5). It is possible to modify the flow temperature from -15°C to +15°C with respect to the adjustment curve (Fig. 1-4 Offset value). This correction, which can be activated using the selector switch (item 3) is kept active for any external temperature measured. The modification of the offset temperature is indicated on the display (item 7). The temperature indicated on the display (item 4) is the current flow temperature and after a few seconds from the modification it is updated with the new correction. 'SET' appears on the status display (Fig. 2-6). By turning the selector switch (item 3) in a clockwise direction the temperature increases and in an anti-clockwise direction it decreases.

Set central heating flow temperature with external sensor (optional)

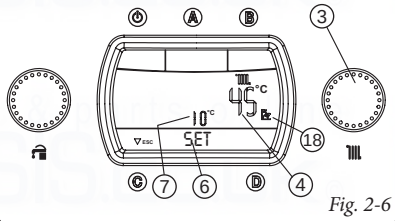

Fig. 2-6

During a request for central heating 'CH ON' appears on the status indicator (item 6) and at the same time as burner lights the flame presence display switches on (item 8) together with the output scale next to it. The displays (items 7 and 9) indicate the instantaneous outlet temperature from the primary heat exchanger. In the central heating mode, if the temperature of the water contained in the system is sufficient to heat the radiators, the boiler will only function with the activation of the boiler pump.

Winter operating mode with external sensor (optional)

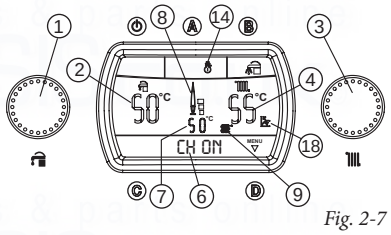

Fig. 2-7

From this moment the boiler operates automatically. With no demand for heat (central heating or domestic hot water) the boiler goes into 'stand-by' mode, equivalent to the boiler being powered without the boiler alight.

Note: The boiler may start-up automatically if the anti-freeze mode is activated, (item 13 Fig. 2-1). Also, the boiler can operate for a brief period of time after a demand for domestic hot water in order to return the domestic hot water store back to temperature.

Important: With the boiler in stand-by mode (⏻) hot water cannot be produced and the safety systems cannot be guaranteed, such as pump anti-block, anti-freeze and three way anti-block.

2.6 FAULT SIGNALS.

The Alpha InTec boiler signals any faults by the flashing symbol (item 5 in Fig. 2-1) along with 'ERRxx' on the staus display (item 6). Where 'xx' corresponds to the error code described in the following table.

Fault signalled	Error code
Ignition failure	01
Safety thermostat fault (overheating), flame control fault	02
Flue safety thermostat fault	03
Short circuit or bad connection	04
Flow sensor fault	05
Maximum number of resets reached	08
Insufficient system pressure	10
Storage tank sensor fault	12
Configuration error	15
Fan fault	16
Flame sensing fault	20
Return sensor fault	23
Push button control panel fault	24
Insufficient circulation	27
Loss of remote control communication	31
Low temperature zone 2 sensor fault	32
Low temperature zone 3 sensor fault	33
Low temperature zone 2 safety thermostat operation	34
Low temperature zone 3 safety thermostat operation	35
IMG Bus communication loss	36
Low power supply voltage	37
Loss of flame signal	38

Ignition failure. The boiler lights automatically with each demand for central heating or domestic hot water. If it does not light within 10 seconds, the boiler remains in stand-by for 30 seconds, tries again and if the second attempt fails it will go into 'ignition block' (ERR01). To eliminate 'ignition block' the Reset button 'C' must be pressed. The fault can be reset 5 times consecutively, after which the function disabled for at least one hour. One attempt is allowed every hour for a maximum of 5 attempts. By switching the boiler on and off the 5 attempts are re-acquired. On commissioning or after extended inactivity it may be necessary to eliminate the 'ignition fault'. If this phenomenon occurs frequently, contact a qualified engineer for assistance.

Safety thermostat fault (overheating). During operation, if a fault causes excessive overheating of the boiler, or a fault occurs in the flame control section, an overheating fault is triggered in the boiler (ERR02). To eliminate 'overheating fault' the Reset button 'C' must be pressed. If this phenomenon occurs frequently, call a qualified engineer for assistance.

Flue safety thermostat fault. This occurs in the case of partial internal obstruction (due to the presence of lime scale) or external blockage (combustion residues) to the combustion chamber. To eliminate the 'flue thermostat fault' the Reset button 'C' must be pressed. Call a qualified engineer to remove the obstructions.

Short circuit or bad connection. This occurs in the case of faults to the safety thermostat (overheating) or fault in the flame sensing control. The boiler does not start and a qualified engineer must be called.

Flow sensor fault. If the board detects a fault with the system NTC flow sensor, the boiler will not start. Call a qualified egineer for assistance.

Maximum number of resets reached. The maximum number of 5 resets has been reached. Refer to previos paragraph - **Ignition failure**.

Insufficient system pressure. Low water pressure inside the central heating system is detected and prevents the boiler operating. Check the boiler pressure gauge (item 1, Fig. 2-1) is between 1 and 1.2 bar. Restore to the correct pressure if necessary and check for leaks.

Storage tank sensor fault. If the board detects a fault with the storage tank sensor, the boiler will not produce domestic hot water. A qualified engineer must be called.

Configuration error. If the board detects a fault in the electric wiring, the boiler will not start. If normal conditions are restored the boiler restarts without having to be reset. If the fault persists, contact a qualified engineer for assistance.

Fan fault. This occurs if the fan has a mechanical or electrical fault. To eliminate the 'fan fault' the Reset button 'C' must be pressed. If the fault persists, contact a qualified engineer for assistance.

Flame sensing fault. This occurs in case of a leak on the detection circuit or fault in the flame control unit. The boiler can be reset in order to allow a new ignition attempt. If the boiler does not start, contact a qualified engineer for assistance.

Return sensor fault. In this condition the boiler does not correctly control the pump if set at 'Auto'. The boiler continues functioning but to eliminate the fault, contact a qualified engineer for assistance.

Push button control panel fault. This occurs when the circuit board detects a fault on the push button control panel. If normal conditions are restored the boiler restarts without having to be reset. If this fault persists, contact a qualified engineer for assistance.

Insufficient circulation. This occurs if there is overheating in the boiler due to insufficient water circulating in the primary circuit, the causes can be:

- low system circulation - check that no shut-off devices are closed on the heating circuit and that the system is free of air (deaerated).
- circulating pump blocked - free the circulating pump.

If this phenomenon occurs frequently, contact a qualified engineer for assistance.

Loss of remote control communication. This occurs in the case of connection to a remote control that is not compatible. Try the connection procedure again by turning the boiler off and then back on again. If the Remote Control is still not detected on re-starting the boiler will switch to local operating mode, i.e. using the controls on the boiler itself. In this case the boiler cannot activate the 'Central heating' function. To make the boiler function in 'Heating' mode, activate the 'Emergency' function present inside the 'Customisations' menu (Section 2.14, P33). If this phenomenon occurs frequently, contact a qualified engineer for assistance.

Low temperature zone 2 sensor fault. If the board detects a fault with the low temperature zone 2 sensor, the boiler will not function in that zone. A qualified engineer must be called.

Low temperature zone 3 sensor fault. If the board detects a fault with the low temperature zone 3 sensor, the boiler will not function in that zone. A qualified engineer must be called.

Low temperature zone 2 safety thermostat operation. During operation, if a fault causes excessive overheating of the low temperature zone 2, the boiler will not satisfy the requests of that zone. If normal conditions are restored the boiler restarts without having to be reset. A qualified engineer must be called.

Low temperature zone 3 safety thermostat operation. During operation, if a fault causes excessive overheating of the low temperature zone 3, the boiler will not satisfy the requests of that zone. If normal conditions are restored the boiler restarts without having to be reset. A qualified engineer must be called.

IMG Bus communication loss. If due to a fault on the boiler control unit, communication is lost between the control unit and the zone control unit or on the IMG Bus, the boiler will not satisfy central heating requests. A qualified engineer must be called.

Low power supply voltage. This occurs when the supply voltage is lower than the allowed limits for the correct operation of the boiler. If normal conditions are restored, the boiler re-starts without having to be reset. If this occurs frequently, contact a qualified engineer for assistance.

Loss of flame signal. This occurs when the boiler has lit correctly but the burner flame switches off unexpectedly, a new attempt at ignition is performed and if normal conditions are restored, the boiler does not have to be reset (this fault can be checked in the list of errors P19 present in the 'M1' menu in Section 2.14.). If this phenomenon occurs frequently, contact a qualified engineer for assistance.

2.7 BOILER SHUTDOWN.

Switch the boiler off by pressing the "⏻", button, disconnect the isolation switch outside of the boiler and close the gas cock upstream from the appliance. Never leave the boiler switched on if left unused for prolonged periods.

2.8 RESTORE THE SYSTEM PRESSURE.

Periodically check the system water pressure. The boiler pressure gauge should read a pressure between 1 and 1.2 bar.
If the pressure falls below 1 bar (with the system cold) restore normal pressure via the system filling valve located in the right side of the boiler and accessible behind the bottom cover (Fig. 2-8).

Note: Ensure the valve is closed after filling.
If pressure reaches 3 bar the safety valve may be activated.
In this case contact a qualified engineer for assistance.
In the event of frequent pressure drops, contact a qualified engineer to check for possible system leakage.

2.9 DRAIN THE SYSTEM.

To drain the boiler, use the central heating drain tap (Fig. 2-8).
Before draining, ensure that the filling valve is closed.

2.10 DRAIN THE HOT WATER SYSTEM.

To drain the domestic hot water system, use the hot water store drain tap (Fig. 2-8).

Note: Before performing this operation close the boiler cold water inlet valve and open a hot water tap in order to allow the store to drain.

2.11 ANTI-FREEZE PROTECTION.

The boiler controls include an anti-freeze mode that activates the pump and burner when the system water temperature in the boiler falls below 4°C.

The anti-freeze function is only guaranteed if:

- *the boiler has a constant supply of gas and electricity.*
- *the boiler is not in stand-by(⏻).*
- *the boiler ignition has not locked out.*
- *the boiler essential components are not faulty.*

In the case of prolonged inactivity (second home), we recommend that:

- the electricity supply is disconnected.
- the central heating and boiler domestic hot water circuits are drained. In systems that are drained frequently, filling must be carried out with suitably treated water to eliminate hardness that can cause lime-scale.

2.12 CASE CLEANING.

Use damp cloths and neutral detergent to clean the boiler casing. Never use abrasive or powder detergents.

2.13 DECOMMISSIONING.

In the event of permanent shutdown of the boiler, contact a qualified engineer for the procedures and ensure that the electrical, water and gas supplies are shut off and disconnected.

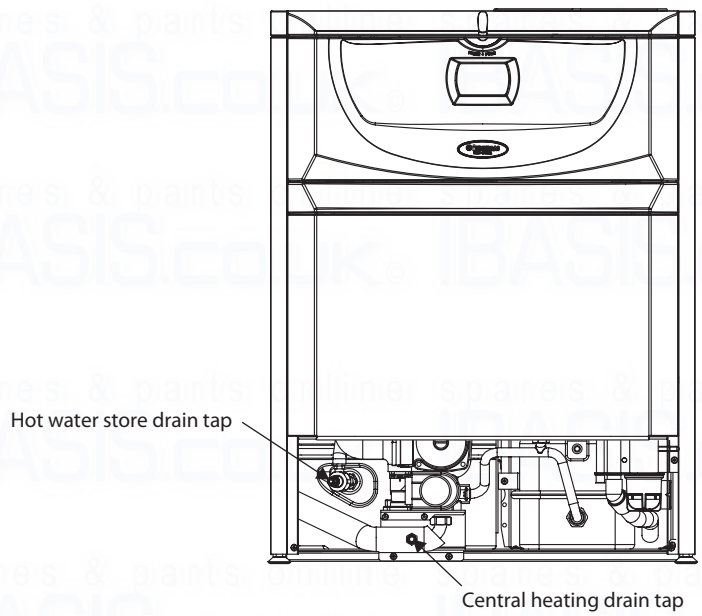

Fig. 2-8

2.14 PARAMETERS AND INFORMATION MENU (REFER ALSO TO FIG. 2-1).

By pressing the button 'D' it is possible to access a menu divided into three main parts:

- 'M1' - Information.
- 'M3' - Customisations.
- 'M5' - Configurations, menu reserved for the engineer and for which a password is required.

Turn the central heating temperature selector switch (item 3) to scroll through the menu items.

Press button 'D' to access the various levels of the menu.

Press button 'C' to go back one level.

Information Menu. This menu contains various information relative to the boiler operation:

Level 1	Button	Level 2	Button	Level 3	Button	Description
M1	D ⇨ ⇦ C	P11	D ⇨ ⇦ C			View the management software version of the boiler P.C.B. xx = software display version yy = ignition control software version (burner control) zz = P.C.B. software version
		P12				View the total operating hours of the boiler
		P13				View the number of burner ignitions
		P14 (with optional external sensor present) - - - (without optional external sensor)	D ⇨ ⇦ C	P14/A		View the current external temperature (optional external sensor used)
				P14/B		View the minimum external temperature recorded (optional external sensor used)
				P14/C		View the maximum external temperature recorded (optional external sensor used)
				RESET	D x select ⇦ C	By pressing button 'D' the MIN and MAX temperatures measured are zeroed
		P15	D ⇨ ⇦ C			No display on this boiler model
		P17				View the fan speed
		P18				The value displayed does not affect this model
		P19				View the last 5 events that caused a boiler shutdown. The sequential number from 1 to 5 is indicated in the display (position 6) with the relative error code in postion 7. By pressing button 'D' repeatedly it is possible to view the operating time and the number of ignitions at which the anomaly occurred

Customisation menu. This menu contains all options that can be customised. (The first item of the various options that appears inside the parameter is that selected by default).

Important: if the international language is to be restored (**A1**), proceed as follows:

- press button 'D' to enter the configuration menu.
- turn selector switch '3' to **'PERSONAL'**.
- press button 'D' to confirm.
- turn selector switch '3' to **'DATI'**.
- press button 'D' to confirm.
- turn selector switch '3' to **'LINGUA'**.
- press button 'D' to confirm.
- turn selector switch '3' to **'A1'**.
- press button 'D' to confirm.

At this point the international items indicated in the menu tables appear on the display.

Level 1	Button	Level 2	Button	Level 3	Button	Level 4	Button	Description
M3	D ⇨ ⇦ C	P31	D ⇨ ⇦ C	**AUTO (Default)**	D x select ⇦ C			The display lights up when the burner is ignited and when the controls are accessed, it remains on for 5 seconds after the last operation performed
				ON				The display is always lit up
				OFF				The display only lights up when the controls are accessed and remains on for 5 seconds after the last operation performed
				P32/B	D ⇨ ⇦ C	**ITALIANO**	D x select ⇦ C	All descriptions are given in Italian
						A1 **(Default)**		All descriptions are given in alphanumerical format
		P33	D ⇨ ⇦ C	**OFF**	D x select ⇦ C			In winter mode, by activating this function it is possible to activate the central heating function even if the optional environmental thermostat (TA) is out of service
				ON				
		RESET	D x select ⇦ C					By pressing button 'D' the customisations made are zeroed, restoring the factory ser values

3 BOILER START-UP (INITIAL CHECK).

To commission the boiler:

- ensure that the Benchmark information and Checklist is completed.
- make sure that the type of gas used corresponds to boiler settings.
- check connection to a 230V-50Hz power supply, correct L-N polarity and the earthing connection.
- make sure the central heating system is filled with water, all radiators have been vented and that the pressure gauge indicates a pressure of 1 to 1.2 bar.
- check that the automatic air vent cap is open and that the system is well deaerated.
- switch the boiler on and check correct ignition.
- check the burner pressure in domestic hot water and central heating modes.
- check the CO_2 in the flue at maximum and minimum flow rate.
- check activation of the safety device in the event of no gas, as well as the relative activation time.
- check activation of the main switch located upstream from the boiler and in the boiler.
- check that the flue is operating correctly.
- check that all control devices are working.
- check the production of domestic hot water.
- check the water circuits for leaks rectifying where necessary.
- check ventilation and/or aeration of the installation room where provided.

If any checks/inspection give negative results, do not start the boiler.

After commissioning the boiler, ensure the Benchmark Checklist at the back od these instructions is completed.

3.1 HYDRAULIC DIAGRAM.

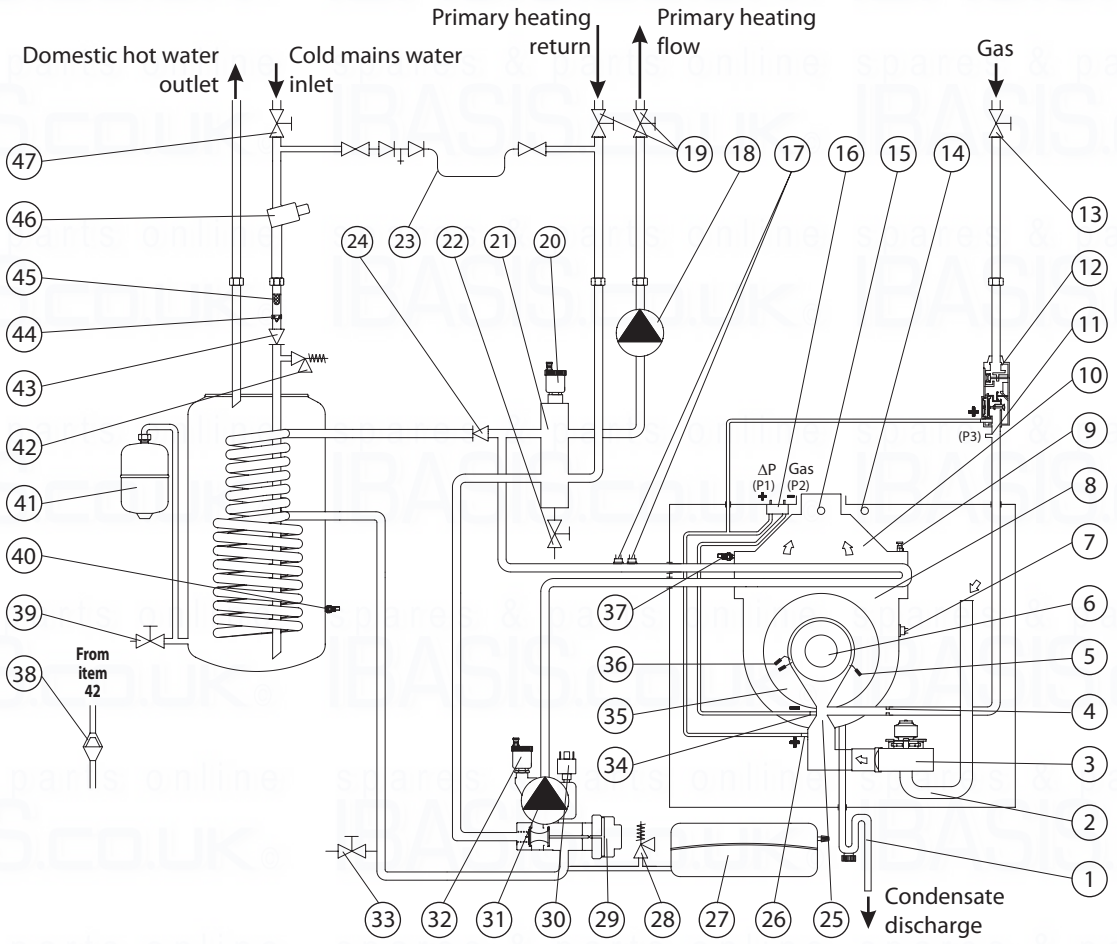

1 - *Condensate trap*
2 - *Air intake pipe*
3 - *Fan*
4 - *Burner injector*
5 - *Flame sensing electrode*
6 - *Burner*
7 - *Flue safety thermostat*
8 - *Heat exchanger*
9 - *Manual air vent*
10 - *Flue hood*
11 - *Gas valve outlet pressure point (P3)*
12 - *Gas valve*
13 - *Gas service cock*
14 - *Air sample point*
15 - *Flue sample point*
16 - *Venturi pressure points*
17 - *Overheat thermostats*
18 - *System pump*
19 - *CH isolation valves*
20 - *Automatic air vent*
21 - *Hydraulic manifold*
22 - *Manifold drain tap*
23 - *Filling loop*
24 - *Check valve*
25 - *Venturi*
26 - *Positive pressure point (P1)*
27 - *CH expansion vessel*
28 - *CH pressure relief valve*
29 - *Diverter valve*
30 - *Pressure switch*
31 - *Boiler pump*
32 - *Automatic air vent*
33 - *CH drain tap*
34 - *Venturi negative pressure point (P2)*
35 - *Gas manifold*
36 - *Ignition electrode*
37 - *Flow temperature sensor*
38 - *Tundish*
39 - *Hot water store drain tap*
40 - *DHW temperature sensor*
41 - *DHW expansion vessel*
42 - *DHW expansion relief valve*
43 - *Check valve*
44 - *Flow regulator*
45 - *Filter*
46 - *Pressure reducing valve*
47 - *DHW isolation valve*

Fig. 3-1

3.2 WIRING DIAGRAM.

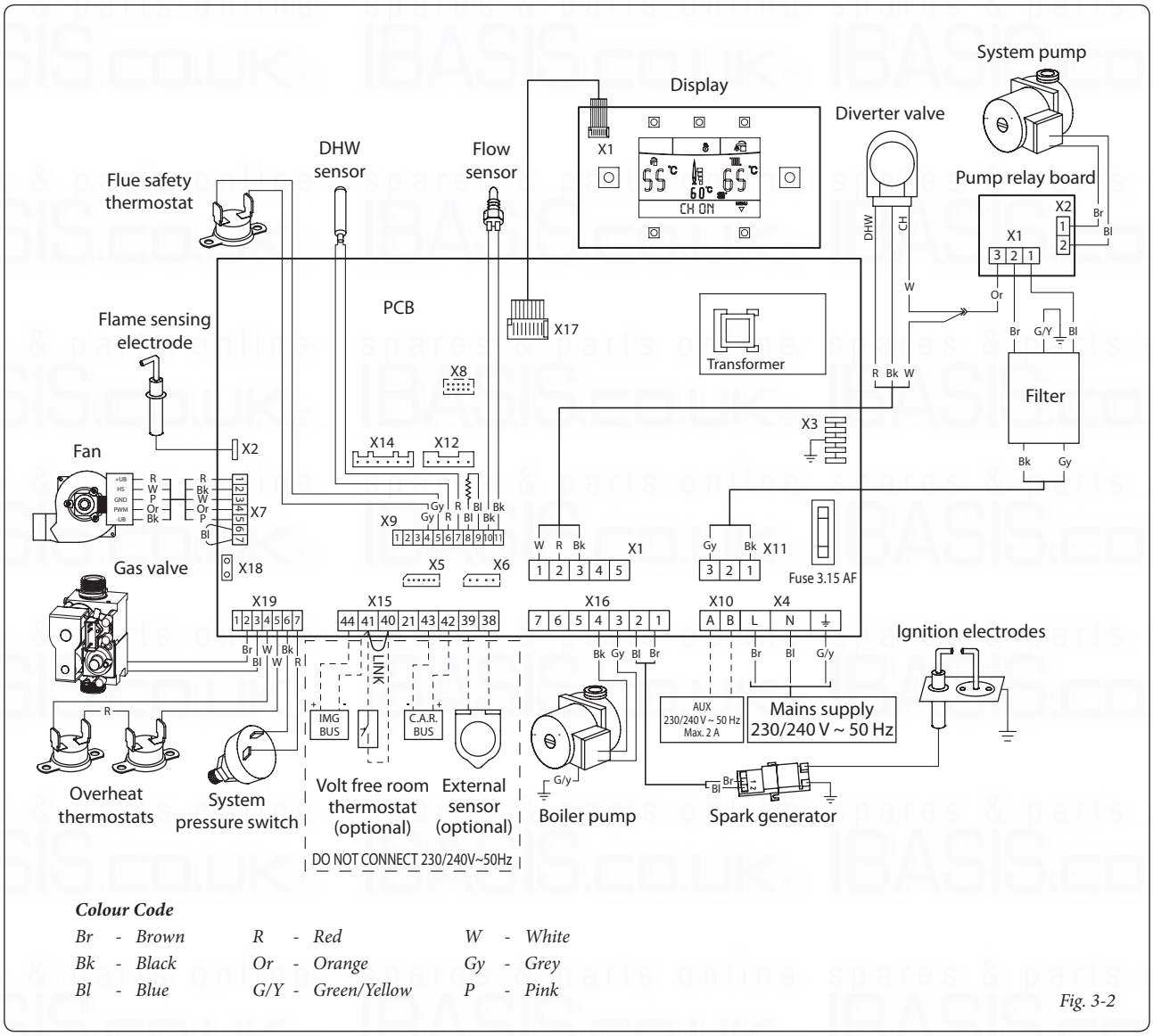

Fig. 3-2

Room thermostat: To fit an external room thermostat connect it to terminals 40 and 41, removing the link first.

The connector X5 is used for the connection to the relay board.

3.3 TROUBLESHOOTING.

Note: Maintenance must be carried out by a qualified Engineer.

- Smell of gas. Caused by leakage from gas pipes. Check pipework for soundness, rectifying where necessary.
- Repeated ignition failure. No gas, check the presence of pressure in the supply and that the gas supply cock is open. Incorrect adjustment of the gas valve, check the correct calibration of the gas valve.
- Irregular combustion or noisiness. This may be caused by: a dirty burner, incorrect combustion parameters, flue terminal not correctly installed. Clean the above components and ensure correct installation of the terminal, check correct setting of the gas valve (Off-Set setting) and correct percentage of CO2 in the flue gas.
- Frequent operation of the overheat safety thermostat. It can depend on the lack of water in the boiler, poor water circulation in the system or blocked pump. Check on the pressure gauge that the system pressure is within established limits. Check that the radiator valves are not closed and also the operation of the pump.
- Blocked condensate trap. This may be caused by dirt or combustion products deposited inside. Check, by means of the condensate drain cap, that there are no residues of material blocking the flow of condensate.
- Heat exchanger blocked. This may be caused by the trap being blocked. Check, by means of the condensate drain cap, that there are no residues of material blocking the flow of condensate.
- Noise due to air in the system. Make sure the cap on the automatic air vent has been opened (item 6 Fig. 1-19). Make sure the system pressure and expansion vessel factory set pressure values are within the set limits; The factory set pressure values of the expansion vessel must be 1.0 bar, the value of system pressure must be between 1 and 1.2 bar. Check that system has been filled and vented correctly.
- Noise due to air inside the heat exchanger. Make sure the heat exchanger has been vented correctly (use the manual air vent, item 19 Fig. 1-19). Ensure the air vent is closed after use..
- Domestic hot water store temperature sensor failure. The boiler or store do not have to be drained in order to replace the DHW sensor, as the sensor is not in direct contact with the DHW present in the boiler.

3.4 CHIMNEY SWEEP FUNCTION.

When this function is activated the boiler operates only by adjusting the central heating selector switch (item 3, Fig. 2-1).
In this state all adjustments are excluded and only the safety thermostat and the limit thermostat remain active. To activate the chimney sweep press the Reset button 'C' for a time between 8 and 15 seconds in absence of domestic hot water and central heating requests. Its activation is indicated by the relative symbol (item 22, Fig. 2-1). This function allows the engineer to check the combustion parameters. After the checks, deactivate the function by switching the boiler off and on again using the Stand-by button ⏻.

3.5 PUMP ANTI-SEIZE FUNCTION.

The boiler has a function that starts the pump at least once every 24 hours for the duration of 30 seconds in order to reduce the risk of the pump becoming blocked due to prolonged inactivity.

3.6 THREE-WAY VALVE ANTI-SEIZE FUNCTION.

Both in 'domestic hot water' and 'central heating' modes the boiler has a function that starts the three-way valve 24 hours after it was last in operation, running it for a full cycle so as to reduce the risk of the valve becoming blocked due to prolonged inactivity.

3.7 RADIATOR ANTI-FREEZE FUNCTION.

If the system return water is below 4°C, the boiler starts up until reaching 42°C.

3.8 P.C.B. PERIODIC SELF-CHECK.

During operation in central heating mode or with the boiler in stand-by mode, this function activates every 18 hours after the last boiler check/power supply. When operating in domestic hot water mode the self-check starts within 10 minutes after the end of the last hot water draw-off, for approximately 10 seconds.

Note: During self-check, the boiler remains off.

3.9 AUTOMATIC VENT FUNCTION.

In the case of new central heating systems it is very important that the system is vented correctly. To activate the 'F8' function (Section 2.4), press buttons 'B and C' at the same time (Fig. 2-1) for 5 seconds with boiler in stand-by. The operation consists of cyclic operation of the pump (100 sec ON, 20 sec OFF) and the 3-way valve (120 sec domestic hot water, 120 sec central heating). The operation ends after 18 hours or by switching the boiler on using the ignition button ⏻.

3.10 YEARLY APPLIANCE CHECK AND MAINTENANCE.

The following checks and maintenance must be performed at least once a year.

- The Benchmark Service Record must be completed in order to preserve the boiler warranty.
- Clean the flue side of the heat exchanger.
- Clean the main burner.
- Check correct ignition and operation.
- Check correct calibration of the burner in domestic hot water and central heating modes.
- Check correct operation of the controls, in particular:
  - the operation of main electrical switch on the boiler.
  - system control thermostat operation.
  - domestic hot water control thermostat operation.
- Check the gas circuit for soundness.
- Check the operation of the flame sensing control:
  - check that the relative intervention time is less than 10 seconds.
- Visually check for water leaks or oxidation from/on connections and traces of condensate residues inside the sealed chamber.
- Check, by means of the condensate drain cap, that there are no residues of material blocking the flow of condensate.
- Check contents of the condensate drain trap.
- Visually check that the water safety drain valve is not blocked.
- Check that, after discharging system pressure and bringing it to zero (read on boiler pressure gauge), the expansion vessel factory-set pressure is 1.0 bar (primary CH vessel).
- Check that the domestic hot water expansion vessel load is at a pressure between 3 and 3.5 bar.
- Check that the system static pressure (after refilling the system and when it is cold) is between 1 and 1.2 bar.
- Visually check that the safety and control devices have not been tampered with and/or shorted, in particular:
  - temperature safety thermostat.
  - system pressure switch.
- Check the condition and integrity of the electrical system and in particular:
  - electrical power cables must be inside the sleeving.
  - there must be no traces of blackening or burning.

Note: When carrying out maintenance on the boiler, also check the central heating system to ensure it is functioning correctly and free of leaks.

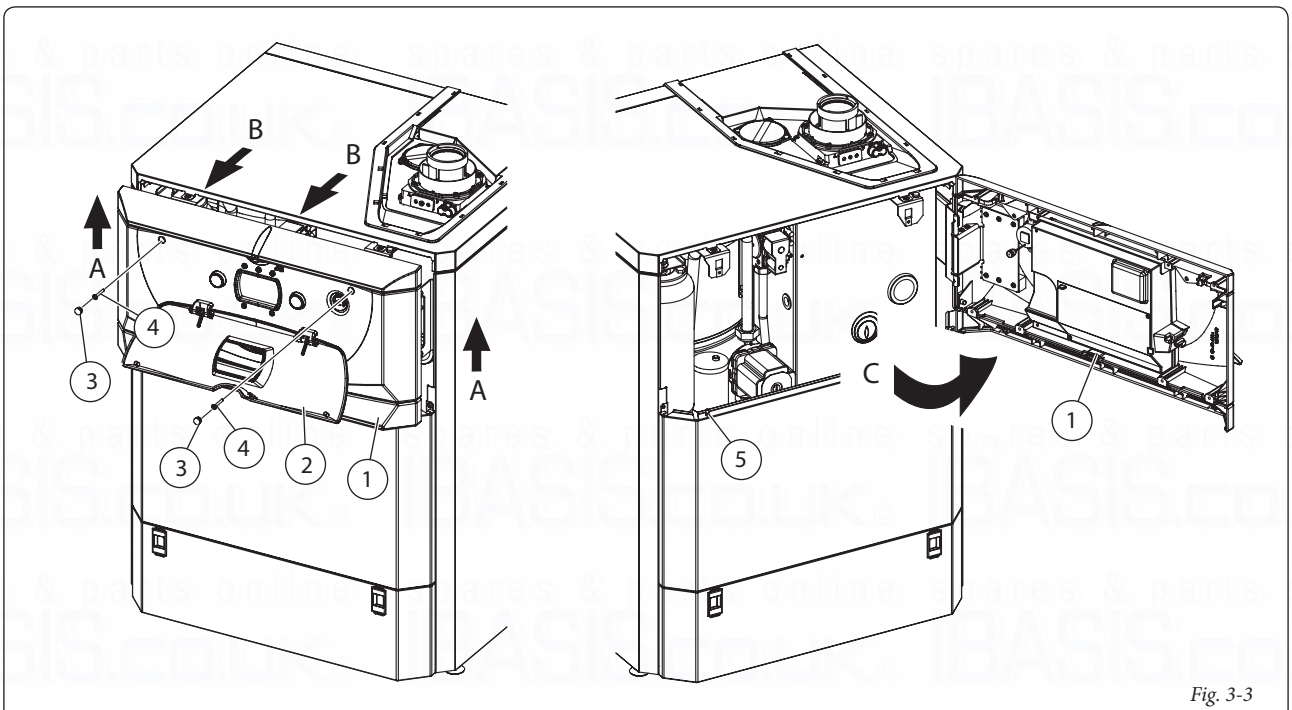

Fig. 3-3

3.11 CASING REMOVAL.

For ease of boiler maintenance the casing can be completely removed as follows.

- Open the control panel (item 1, Fig. 3-3).
  - Press the centre of the control panel cover (2) to open it and lower the panel. - Carefully remove the rubber bump stops (3) and loosen the two screws (4).
  - Step A. Lift the control panel up, gripping it at the sides, to disengage it from the locking pin (5).
  - Step B. Pull the control panel forwards slightly.
  - Step C. Hinge open the panel as shown in Fig. 3-3.
- Remove the lower panel (item 6, Fig. 3-4).
  - Step D. Press down on the two catches (7)
  - Step E. Hinge the cover forwards on the two screws (8) and lift it off the screws.
- Remove the remaing case panels (Fig. 3-5).
  - Top cover (item 9, Fig. 3-5). Remove the two screws (10), pull the cover forwards slightly to disengage the fixings (see view A) and lift it off.
  - Rear top cover (item 11, Fig. 3-5). Remove the two screws (12) and lift off the cover.
  - Front panel (item 13, Fig. 3-5). Remove the two screws (14), lift up the cover slightly to disengage the fixings (see view B) then pull it forwards off the side panels.
  - Side panels (item 16, Fig. 3-5). Remove the upper and lower screws (15) then slide the panel forwards to disengage it from the rear fixings (see view C).

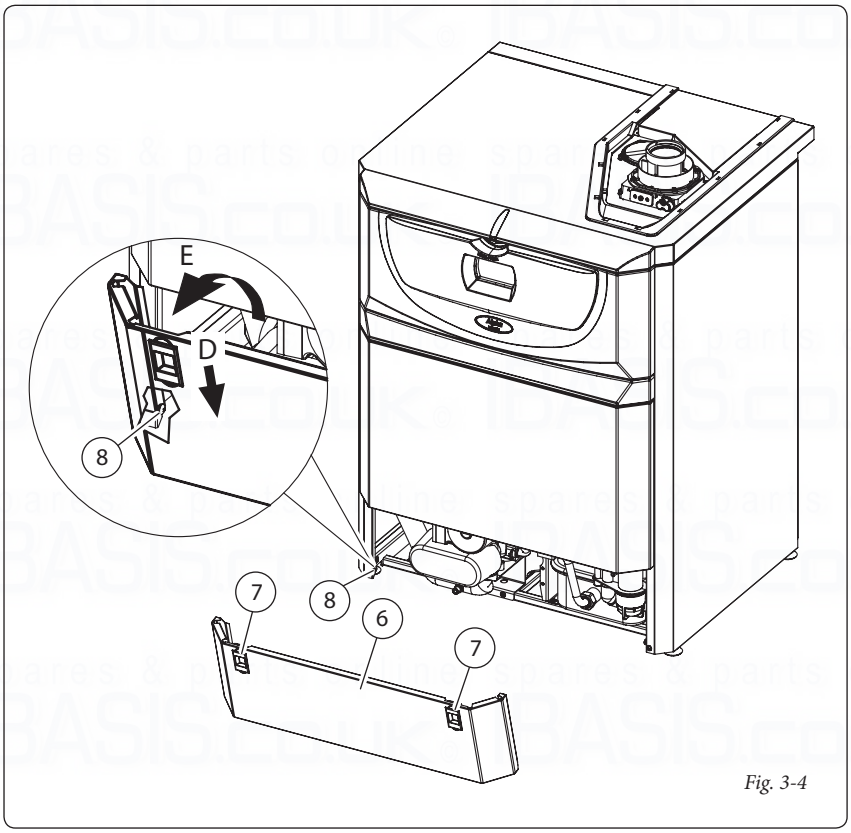

Fig. 3-4

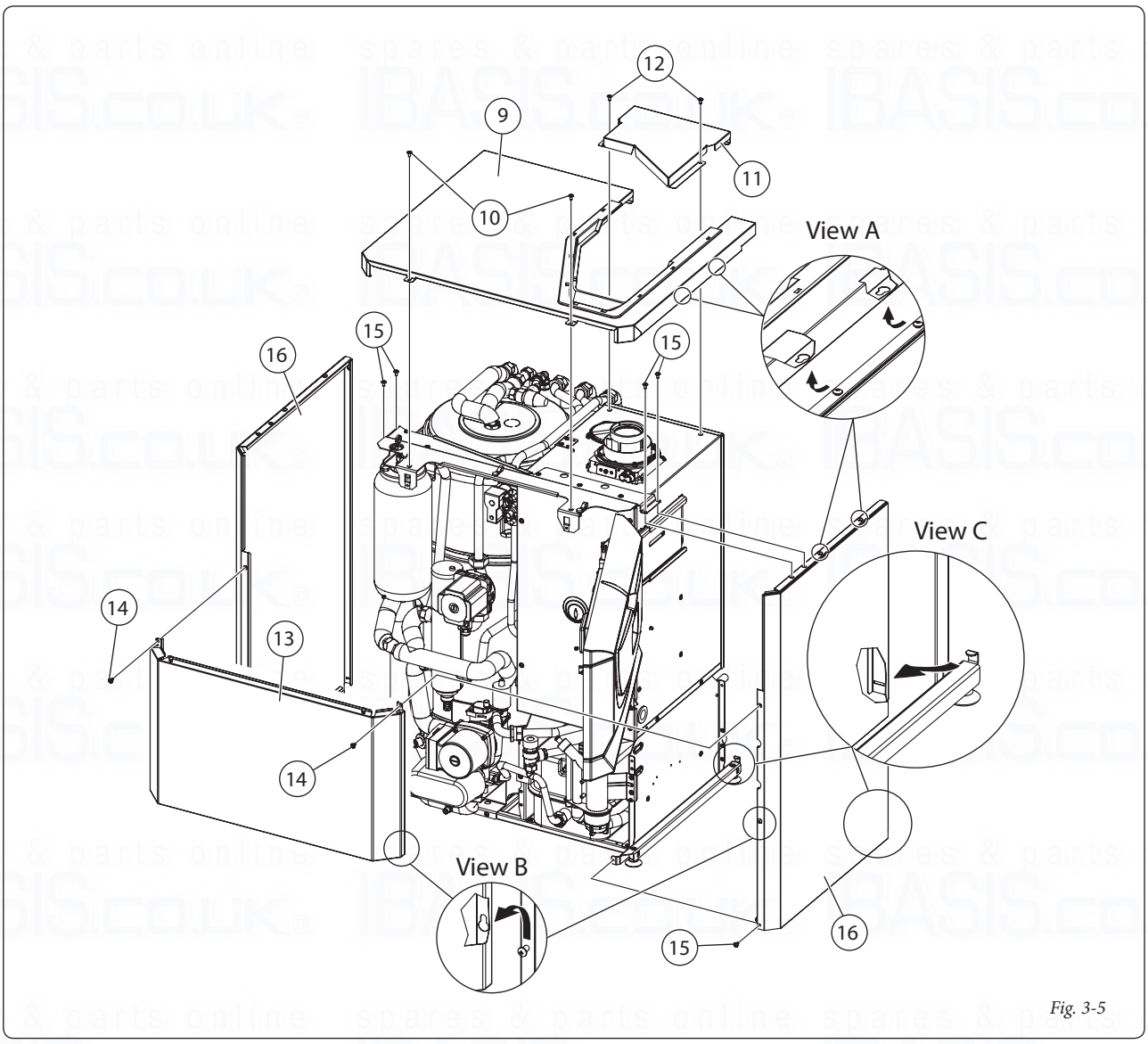

Fig. 3-5

3.12 COMBUSTION SETTINGS.

		Natural Gas	Propane
Supply pressure	mbar	20	37
Burner nozzle	mm	N/A	6.00
Flue flow rate at max heat output	kg/h	52	53
Flue flow rate at min heat output	kg/h	12	12
CO_2 at Q. Nom./Min.	%	9.40 / 8.90	10.50 / 10.30
CO at 0% di O_2 at Q. Nom./Min.	ppm	206 / 9	190 / 8
NOX at 0% of O2 at Nom.Q./Min.	ppm	83 / 43	99 / 54
Flue temperature at nominal output	°C	73	74
Flue temperature at minimum output	°C	64	66
Gas rate at maximum heat output	m^3/h	3.49	N/A
Gas rate at maximum heat output	kg/h	N/A	2.57

3.13 TECHNICAL DATA.

Maximum heat input	kW	33.0
Minimum heat input	kW	7.3
Maximum heat output (useful)	kW	32.0
Minimum heat output (useful)	kW	6.9
Efficiency 80/60 Nom./Min.	%	96.9 / 94.5
Efficiency 50/30 Nom./Min.	%	104.7 / 105.8
Efficiency 40/30 Nom./Min.	%	107.3 / 107.3
Heat loss at casing with burner Off/On (80-60°C)	%	0.80 / 0.20
Heat loss at flue with burner Off/On (80-60°C)	%	0.02 / 2.90
Central heating circuit max. operating pressure	bar	3
Central heating circuit max. operating temperature	°C	90
Max. adjustable central heating temperature	°C	25 - 85
Min. adjustable central heating temperature	°C	25 - 50
System expansion vessel total volume	l	11.7
System expansion vessel factory-set pressure	bar	1.0
Domestic hot water expansion vessel total volume	l	3.0
Domestic hot water expansion vessel factory-/set pressure	bar	2.5
Water content in generator	l	4.0
Total head available with 1000 l/h	m H_2O	3.61
Hot water production useful heat output	kW	32.0
Domestic hot water adjustable temperature	°C	20 - 60
Domestic hot water circuit flow limiter at 2 bar	l/min	12.6
Min. pressure domestic hot water circuit	bar	0.3
Max. pressure domestic hot water circuit	bar	8.0
*Flow rate 'D' according to EN 625	l/min	19.5
Continuous draw capacity (ΔT 30°C)	l/min	15.8
Domestic hot water performance classification according to EN 13203-1	★★★	
Weight of full boiler	kg	147.7
Weight of empty boiler	kg	90.1
Power supply connection	V/Hz	230/50
Power input	A	0.85
Installed electric power	W	165
Pump consumption	W	34
Fan consumption	W	26.4
Equipment electrical system protection	-	IPX5D
Flue gas max. temperature	°C	75
NO_X class	-	5
Weighted NO_X	mg/kWh	52
Weighted CO	mg/kWh	17
Type of appliance	C13 / C33 / C43 / C53 / C83 / C93 / B33 / B53p	
Category	II2H3B/P	

- Flue temperature values refer to an air inlet temperature of 15°C and flow temperature of 50°C.
- The data relevant to domestic hot water performance refer to a dynamic inlet pressure of 2 bar and an inlet temperature of 15°C, the values are measured directly at the boiler outlet to obtain the data declared mixing with cold water may be necessary.
- * Specific capacity 'D': domestic hot water flow rate corresponding to an average increase of 30K, which the boiler can supply in two successive withdrawals.

  To achieve these higher flow rates the flow restrictor must be removed from the cold inlet connection. See Section 1.15 item 35.

3.14 SHORT PARTS LIST.

Description	Alpha Part No.
Hydraulic assembly	3.020477
DHW cylinder (complete assembly)	3.023189
Circulating pump 15 - 60 - 130	1.032756
Bottom front case panel	2.013823
Control panel door assembly	3.017249
Display board	1.032461
Burner manifold	1.025506
Pump assembly (head and housing)	3.020069
CH expansion vessel (12 litre)	1.027232
Flue thermostat (110 °C)	1.025798
3-way valve complete cartridge	3.013730
Drain fitting with hose union	1.4275
Pressure sampling point cap	1.025690
Heating manifold drain tap	1.0113
Front case panel	2.013824
DHW expansion vessel (3 litre)	1.033497
Safety valve - DHW (6 bar)	1.018091
D.15 pipe - safety valve outlet	1.033560
Automatic air vent valve + 'O' ring	1.017113
D.15 pipe - heating system safety valve	1.033634
Burner	1.019622
NTC fast immersion probe	1.021762
Flue hood assembly	3.020662
Condensation module	1.024965
Bottom frame assembly	3.019766
Cylinder top plug	1.1122
Cylinder tank gasket	1.7199
Relay PCB	1.027418
Control panel knob	1.022370
Pressure gauge	1.032278
Hot water outlet cylinder fitting	1.5370
PCB	1.028532
Pressure switch	1.025006
Gas valve	1.031823
Lefthand case panel	2.013822
Plug for flange with sample points	1.025278
Drain fitting	3.023191
Safety valve - CH (3 bar)	1.033574
Automatic air vent	1.2295
Flow regulator (pink - 14 litres)	1.032198
Righthand case panel	2.013821
Top case panel (front)	2.015009
Top case panel (rear)	2.014920
Fan	1.029719
Diverter valve motor	1.018064
Sealed chamber cover with window	3.019767
Venturi	1.024392
Spark generator	1.025360
Ignition electrode assembly	3.017477
Flame sensing electrode	1.028890
Overheat thermostat (100°C)	1.025797
Condensate drain pipe	1.027265
Condensate trap	3.020486
Complete connection kit	3.023368

GAS BOILER SYSTEM COMMISSIONING CHECKLIST

This Commissioning Checklist is to be completed in full by the competent person who commissioned the boiler as a means of demonstrating compliance with the appropriate Building Regulations and then handed to the customer to keep for future reference.

Failure to install and commission this equipment to the manufacturer's instructions may invalidate the warranty but does not affect statutory rights.

Customer Name _____ Telephone Number _____

Address _____

Boiler Make and Model _____

Boiler Serial Number _____

Commissioned by *(print name)* _____ Gas Safe Register licence No. _____

Company Name _____ Telephone Number _____

Company Address _____

_____ Commissioning Date _____

To be completed by the customer on receipt of a Building Regulations Compliance Certificate*:

Building Regulations Notification Number *(if applicable)* _____

CONTROLS **Tick the appropriate boxes**

Time and Temperature Control to Heating	Room Thermostat and Programmer/Timer ☐	Programmable Room Thermostat ☐	Load/Weather Compensation ☐	Optimum Start Control ☐
Time and Temperature Control to Hot Water			Cylinder Thermostat and Programmer/Timer ☐	Combination Boiler ☐
Heating Zone Valves			Fitted ☐	Not Required ☐
Hot Water Zone Valves			Fitted ☐	Not Required ☐
Thermostatic Radiator Valves			Fitted ☐	Not Required ☐
Automatic Bypass to System			Fitted ☐	Not Required ☐
Boiler Interlock				Provided ☐

ALL SYSTEMS

The system has been flushed and cleaned in accordance with BS7593 and boiler manufacturer's instructions Yes ☐

What system cleaner was used? _____

What inhibitor was used? _____ Quantity _____ *litres*

CENTRAL HEATING MODE **Measure and Record:**

Gas Rate	_____ m^3/hr	OR		_____ ft^3/hr
Burner Operating Pressure (if applicable)	_____ mbar	OR	Gas Inlet Pressure	_____ mbar
Central Heating Flow Temperature				_____ °C
Central Heating Return Temperature				_____ °C

COMBINATION BOILERS ONLY

Is the installation in a hard water area (above 200ppm)? Yes ☐ No ☐

If yes, has a water scale reducer been fitted? Yes ☐ No ☐

What type of scale reducer has been fitted? _____

DOMESTIC HOT WATER MODE Measure and Record:

Gas Rate	_____ m^3/hr	OR		_____ ft^3/hr
Burner Operating Pressure (at maximum rate)	_____ mbar	OR	Gas Inlet Pressure (at maximum rate)	_____ mbar
Cold Water Inlet Temperature				_____ °C
Hot water has been checked at all outlets			Yes ☐ Temperature	_____ °C
Water Flow Rate				_____ *l/min*

CONDENSING BOILERS ONLY

The condensate drain has been installed in accordance with the manufacturer's instructions and/or BS5546/BS6798 Yes ☐

INSTALLATIONS

If required by the manufacturer, record the following CO_2 _____ % OR CO _____ *ppm* OR CO/CO_2 Ratio _____

The heating and hot water system complies with the appropriate Building Regulations Yes ☐

The boiler and associated products have been installed and commissioned in accordance with the manufacturer's instructions Yes ☐

The operation of the boiler and system controls have been demonstrated to and understood by the customer Yes ☐

The manufacturer's literature, including Benchmark Checklist and Service Record, has been explained and left with the customer Yes ☐

Commissioning Engineer's Signature _____

Customer's Signature _____

(To confirm satisfactory demonstration and receipt of manufacturer's literature)

*All installations in England and Wales must be notified to Local Authority Building Control (LABC) either directly or through a Competent Persons Scheme. A Building Regulations Compliance Certificate will then be issued to the customer.

benchmark COLLECTIVE MARK
THE MARK OF QUALITY FOR THE INSTALLATION, COMMISSIONING AND SERVICING OF DOMESTIC HEATING AND HOT WATER SYSTEMS

©Heating and Hotwater Industry Council (HHIC)

SERVICE RECORD

It is recommended that your heating system is serviced regularly and that the appropriate Service Record is completed.

Service Provider

Before completing the appropriate Service Record below, please ensure you have carried out the service as described in the manufacturer's instructions.

Always use the manufacturer's specified spare part when replacing controls.

SERVICE 1 Date

Energy Efficiency Checklist completed? Yes ☐ No ☐

Engineer Name

Company Name

Telephone Number

Gas Safe Register licence No.

Comments

Signature

SERVICE 2 Date

Energy Efficiency Checklist completed? Yes ☐ No ☐

Engineer Name

Company Name

Telephone Number

Gas Safe Register licence No.

Comments

Signature

SERVICE 3 Date

Energy Efficiency Checklist completed? Yes ☐ No ☐

Engineer Name

Company Name

Telephone Number

Gas Safe Register licence No.

Comments

Signature

SERVICE 4 Date

Energy Efficiency Checklist completed? Yes ☐ No ☐

Engineer Name

Company Name

Telephone Number

Gas Safe Register licence No.

Comments

Signature

SERVICE 5 Date

Energy Efficiency Checklist completed? Yes ☐ No ☐

Engineer Name

Company Name

Telephone Number

Gas Safe Register licence No.

Comments

Signature

SERVICE 6 Date

Energy Efficiency Checklist completed? Yes ☐ No ☐

Engineer Name

Company Name

Telephone Number

Gas Safe Register licence No.

Comments

Signature

SERVICE 7 Date

Energy Efficiency Checklist completed? Yes ☐ No ☐

Engineer Name

Company Name

Telephone Number

Gas Safe Register licence No.

Comments

Signature

SERVICE 8 Date

Energy Efficiency Checklist completed? Yes ☐ No ☐

Engineer Name

Company Name

Telephone Number

Gas Safe Register licence No.

Comments

Signature

SERVICE 9 Date

Energy Efficiency Checklist completed? Yes ☐ No ☐

Engineer Name

Company Name

Telephone Number

Gas Safe Register licence No.

Comments

Signature

SERVICE 10 Date

Energy Efficiency Checklist completed? Yes ☐ No ☐

Engineer Name

Company Name

Telephone Number

Gas Safe Register licence No.

Comments

Signature

spares & parts online IBASIS.CO.UK

spares & parts online IBASIS.CO.UK

During the useful life of the unit, the performance is affected by external factors, such as the hardness of tap water, weathering, deposits in the flue and so on. The data given refers only to new units correctly installed and used in accordance with the instructions.

Note: It is recommended that the boiler is serviced annually.

www.alpha-innovation.co.uk

For Technical help or for Service call the Alpha Helpline or use the following e-mail:

info@alpha-innovation.co.uk

Alpha Helpline 0844 871 8764

Alpha Therm Limited
Nepicar House, London Road,
Wrotham Heath, Sevenoaks, Kent
TN15 7RS

These instructions have been carefully prepared but we reserve the right to alter the specification at any time in the interest of product improvement.

© Alpha Therm Limited 2013.

Part No. 1.034294 rev. 15.039381/000
03/2013 D323