Installation and Servicing Instructions

Also includes User's instructions at back

Alpha SolarSmart 100

Pre-Heat Drain Back Solar System and Wall Mounted Unvented Hot Water Solar Cylinder for use with an Alpha Combination Boiler

For Technical help or for Service call ...
ALPHA HELPLINE Tel: 0844 871 8764
email: info@alpha-innovation.co.uk
website: www.alpha-innovation.co.uk

Alpha
HEATING INNOVATION

Alpha Therm Limited
Nepicar House, London Road,
Wrotham Heath, Sevenoaks,
Kent TN15 7RS

SOLAR Key Mark Certificated

Leave these instructions with the User

These instructions have been carefully prepared but we reserve the right to alter the specification at any time in the interest of product improvement.
© Alpha Therm Limited 2012.

Part No. 1.032744 Rev 15.037926/000
1212/D321

BENCHMARK SCHEME

To comply with Building Regulations Part L1 (Part 6 in Scotland) the system should be installed in accordance with the manufacturer's instructions. Self-certification that the system has been installed to comply with Building Regulations can be demonstrated by completing and signing the Benchmark Checklist at the back of these instructions

Code of Practice

For the installation, commissioning and servicing of domestic heating and hot water products.

Benchmark places responsibilities on both manufacturers and installers*. The purpose is to ensure that customers** are provided with the correct equipment for their needs, that it is installed, commissioned and serviced in accordance with the manufacturer's instructions by competent persons and that it meets the requirements of the appropriate Building Regulations. Installers are required to carry out work in accordance with the following:

Standards of Work

- Be competent and qualified to undertake the work required.
- Install, commission, service and use products in accordance with the manufacturer's instructions provided.
- Ensure that where there is responsibility for design work, the installation is correctly sized and fit for purpose.
- Meet the requirements of the appropriate Building Regulations. Where this involves notifiable work be a member of a Competent Persons Scheme or confirm that the customer has notified Local Authority Control (LABC), prior to work commencing.
- Complete all relevant sections of the Benchmark Check list/Service Record when carrying out commissioning or servicing of a product or system.
- Ensure that the product or system is left in a safe condition and, where possible, in good working order.
- Highlight to the customer any remedial or improvement work identified during the course of commissioning or servicing work.
- Refer to the manufacturer's helpline where assistance is needed.
- Report product faults and concerns to the manufacturer in a timely manner.

Customer Service

- Show the customer any identity card that is relevant to the work being carried out prior to commencement or on request.
- Give a full and clear explanation/demonstration of the product or system and its operation to the customer.
- Hand over the manufacturer's instructions, including the Benchmark Checklist, to the customer on completion of an installation.
- Obtain the customer's signature on the Benchmark Checklist to confirm satisfactory demonstration and receipt of manufacturer's instructions.
- Advise the customer that regular product servicing is needed, in line with manufacturers' recommendations, to ensure that safety and efficiency is maintained.
- Respond promptly to calls from a customer following completion of their work, providing advice and assistance by phone and, if necessary, visiting the customer.
- Rectify any installation problems at no cost to the customer during the installer's guarantee period.

* The use of the word "installer" is not limited to installation itself and covers those carrying out installation, commissioning and/or servicing of heating and hot water products, or the use of supporting products (such as water treatment or test equipment).

** Customer includes householders, landlords and tenants.

The Benchmark Scheme is managed and promoted by:
Heating and Hotwater Industry Council (HHIC)
Camden House, Warwick Rd
Kenilworth
CV8 1TH
Telephone: 01926 513747
E-mail: info@hhic.org.uk
Website: www.hhic.org.uk

benchmark COLLECTIVE MARK
THE MARK OF QUALITY FOR THE INSTALLATION, COMMISSIONING AND SERVICING OF DOMESTIC HEATING AND HOT WATER SYSTEMS

Useful contact details; **Gas Safe Register** - 0800 408 5577 - www.gassaferegister.co.uk

Alpha Heating Innovation;
General Sales Enquiries - 0844 871 8760
Technical Helpline - 0844 871 8764

CONTENTS

1 Introduction....3
2 Technical data....4
3 General information....7
4 Installation....13
5 Commissioning....18
6 System operation....21
7 Routine inspection....22
8 Component replacement....23
9 Wiring diagram....25
10 Diagnostics and fault codes....26
11 Parts list....28
Benchmark Checklist
Service Record

1 INTRODUCTION

The Alpha SolarSmart 100 system is a pre-heat drain back solar collector system which includes an unvented 103 litre cylinder to store water heated by the solar collector. It is recommended that the system is used in conjunction with an Alpha combination boiler fitted with the Alpha solar inlet sensor which is supplied with the system. The cylinder is fitted with a pump, control unit, expansion vessel, safety valves and temperature sensors. A universal drain back unit (DBU) with pump, stainless steel heat exchanger and vessel for use with one or two collectors is also supplied.

The SolarSmart 100 should be used with one or two collectors.

A tundish and 2.5 bar pressure reducing valve are supplied with the cylinder, the pressure reducing valve must be installed in the mains inlet to the cylinder. All hot water blending valves fitted to the system must take the cold supply after the pressure reducing valve to maintain a balanced pressure.

The solar collectors should be ideally facing South and when using two collectors (portrait only) they must both face in the same direction. For more information see Section 3.6.

The solar collector is supplied in special packaging to protect it during transit. The four corners are protected and the exposed edges are protected. The glass front and back panel are exposed. The packaging is not intended to support the full lift weight of the collector.

When manually carrying the collector, always hold the exposed edges and not the packaging alone. The collector can be lifted both horizontally and vertically. The collector can only be carried using lifting forks when on the original wooden pallet base.

IMPORTANT

This is in accordance with the Building Regulations for unvented hot water storage systems and the Local Authority must be notified of the intention to install. Therefore the installation must be carried out by a person competent to install unvented hot water systems.

The installation must be carried out in accordance with the following recommendations:-

All current Building Regulations issued by the Department of the Environment, i.e. Approved Document L1

Building Standards (Scotland) (Consolidation) Regulations issued by the Scottish Development Department

UK Water Regulations/Byelaws (Scotland)

Health & Safety Document No. 635 (The Electricity At Work Regulations 1989)

The installation should also be in accordance with the following British Standard Codes of Practice:-

BS 5449.....Forced circulation hot water systems
BS 5546.....Installation of hot water supplies for domestic purposes
BS 5918.....Solar heating systems for domestic hot water
BS 6700.....Design, installation, testing and maintenance of services supplying water

Failure to install this appliance correctly could lead to prosecution and will invalidate the guarantee. It is in your own interest and that of safety to ensure that the law is complied with.

Manufacturer's instructions must **NOT** be taken in anyway as over-riding statutory obligations.

These appliances meet the requirements of IP20, i.e. degree of protection against moisture.

Reference should be made to Criteria for gas fired combination boilers used as after heaters in solar thermal systems and BRE Solar heating UK:1981.

Proviso: WRAS Approval - Solar heating system components. Compliance with the relevant requirements of the Water Supply (Water Fittings) Regulations 1999 has been assessed for this product only as a component of a heating system. If it is to be installed as part of a system using solar energy or ground - or air - source heat pumps for pre-heating water which is to be used as domestic hot water, the Water Fittings Regulations place a legal duty on the installer and user to ensure that the installation and operation of the complete system prevents contamination of domestic hot water by Legionella bacteria, which can grow in water stored at temperatures between 20° and 45°C. Where disinfection by heating is relied on to meet this obligation, information on minimum conditions for thermal disinfection of Legionella bacteria can be found on the WRAS website - www.wras.co.uk

The Alpha SolarSmart unvented hot water cylinders have been specifically designed to prevent the proliferation of legionella bacteria in this hot water system, and disinfection by heating is not relied upon to meet this obligation.

Lightning Protection

Refer to BS6651 for lightning protection, however this does not give specific requirements for solar panels and generally collectors mounted on non-metallic roof structures will not require lightning protection.

Advice should be sought if mounting on metallic roof structures or mounting in situations where the risk of strikes are high.

2 TECHNICAL DATA

2.1 DHW SYSTEM

Solar Cylinder	
Max. Hot Water Working Pressure	5.5 bar
Max. Mains Inlet Pressure (inlet of pressure reducing valve)	12 bar
Min. Mains Water Pressure	0.1 bar
Mains Inlet and DHW Outlet Connections	15 mm
DBU Flow and Return Connections	15 mm
DHW Cylinder Capacity	103 L
Expansion Vessel Size (pre-charge press.)	8 L at 2.5 bar
Pressure Reducing Valve Setting	2.5 bar
Temperature and Pressure Relief Valve	90°C/7 bar
Pressure Relief Valve Setting	6 bar
Cylinder Case/Insulation	50 mm EPP
Max. Outlet Water Temp. (Approx.)	70° C
Tundish Connection	¾" BSP for 22 mm
Immersion Heater Boss (Alpha immersion kit only)	1¼" BSP

Reference to WRC-NSF Test Procedure 1.50.220 using a 30 kW boiler. Time to reheat water store by 55°C - 25 minutes. Reheat time for 70% of store - 18 minutes

Drain Back Unit (DBU)	
DHW Circuit:	
Flow Connection	15 mm
Return Connection	15 mm
Max. Working Pressure	6 bar
Heat Exchanger Content	0.32 L
Collector Circuit:	
Flow Connection	15 mm
Return Connection	22 mm
Max. Working Pressure	6 bar
Vessel Size	10 L
Max. Filled Content	8.8 L
Case/Insulation	50 mm EPP

Note: Copper or Stainless Steel pipe MUST be used between the cylinder, drain back unit and collector. Solder connections MUST NOT be used on the circuit between the drain back unit and the collector

2.2 SOLAR COLLECTOR SYSTEM

Type:		Portrait	Landscape
Dimensions			
Total Surface Area	m²	2.51	
Aperture Area	m²	2.4	
Length x Width x Thickness	mm	2150 x 1170 x 83	1170 x 2150 x 83
Water Content	L	1.7	2.3
Lift Weight	kg	40	
Hydraulics			
Maximum Pressure	bar	10	
Absorber			
Aluminium Cover and Copper Pipe (Length x Width x Depth)	mm	2140 x 1030 x 0.5	1030 x 2140 x 0.5
Spectral Selective Layer			
Absorption Coefficient	%	95	
Emission f	%	5	
Glass			
Transparent, Hardened - Thickness	mm	4	
Collector Housing and Frame			
Material		Aluminium	
Insulation - Mineral Wool			
Thickness	mm	40	
Thermal conduction coefficient	W/mk	0.035	
Cover Frame			
Material		Aluminium	
Temperature Sensor			
Type - PTC	Ohm	1 k	
Connections			
Pipe connections	mm	22 mm	
Roof Slope		15° Min. (75° Max.)	
Zero Loss Collector Efficiency (No)		79 %	80 %
Collector Heat Loss Coefficient (a1)	W/m²k	3.260	3.606
Aperture to Gross Collector Area Ratio		0.96	
Max. Wind and Snow Load			
	Pitched roof	Same as Supporting Roof Structure	
	Flat roof	Wind Speed 25 m/s - Snow Load 1.9 kN/m²	

2.3 INSTALLATION

The collector installation must be carried out using the kits and connections supplied by Alpha. A maximum of two collectors can be connected together using the additional collector connection kit.

Solar Cylinder Min. Clearances for Servicing	Top	100 mm
	Bottom	300 mm
	Sides	10 mm
	Front	450 mm
DBU Min. Clearances for Servicing	Top	100 mm
	Bottom	100 mm
	Side	10 mm
	Front	450 mm
Lift Weight - Cylinder Assembly		36 kg
Lift Weight DBU		10 kg
Weight Full and Operational - Cylinder Assembly		140 kg
Weight Full and Operational - DBU		19 kg

2.4 ELECTRICAL

Supply		230/240 V ~ 50 Hz
External Fuse		3 A
Power Consumption	Max./Min.	130 W / 5 W

2.5 GENERAL

Solar Cylinder Dimensions	Height	1013 mm
	Width	596 mm
	Depth	567 mm
DBU Dimensions	Height	573 mm
	Width	400 mm
	Depth	245 mm
Solar Cylinder - Material		Stainless Steel
DBU Heat Exchanger - Material		Stainless Steel
Covers/Insulation Material		EPP Foam
Solar Cylinder Insulation Thickness		50 mm
Standing Energy Loss of Solar Cylinder		1.62 kWh/24hr 0.65 W/litre
Global Warming Potential		Zero
Ozone Depletion Potential		Zero
Insulation Blowing Agent		Steam (Water)

2.6 LOCATION

The DBU should be positioned as close as possible under the solar collector. To enable the system to drain back correctly, the top of the DBU must be below the bottom of the collectors with a continuous fall to the DBU connections. The pipework between the collector and DBU can be extended according to the table in Fig. 6, maintaining a maximum vertical distance of 4 m using stainless steel or copper pipe and no soldered joints.

The pipework between the solar cylinder and DBU can be extended to a maximum of 10m, maintaining a maximum vertical distance of 6 m.

All pipework should be installed using the minimum of bends and restrictions possible and insulated using high temperature lagging for the pipework between the collector and DBU.

2.7 SOLARSMART 100 SYSTEM SCHEMATIC

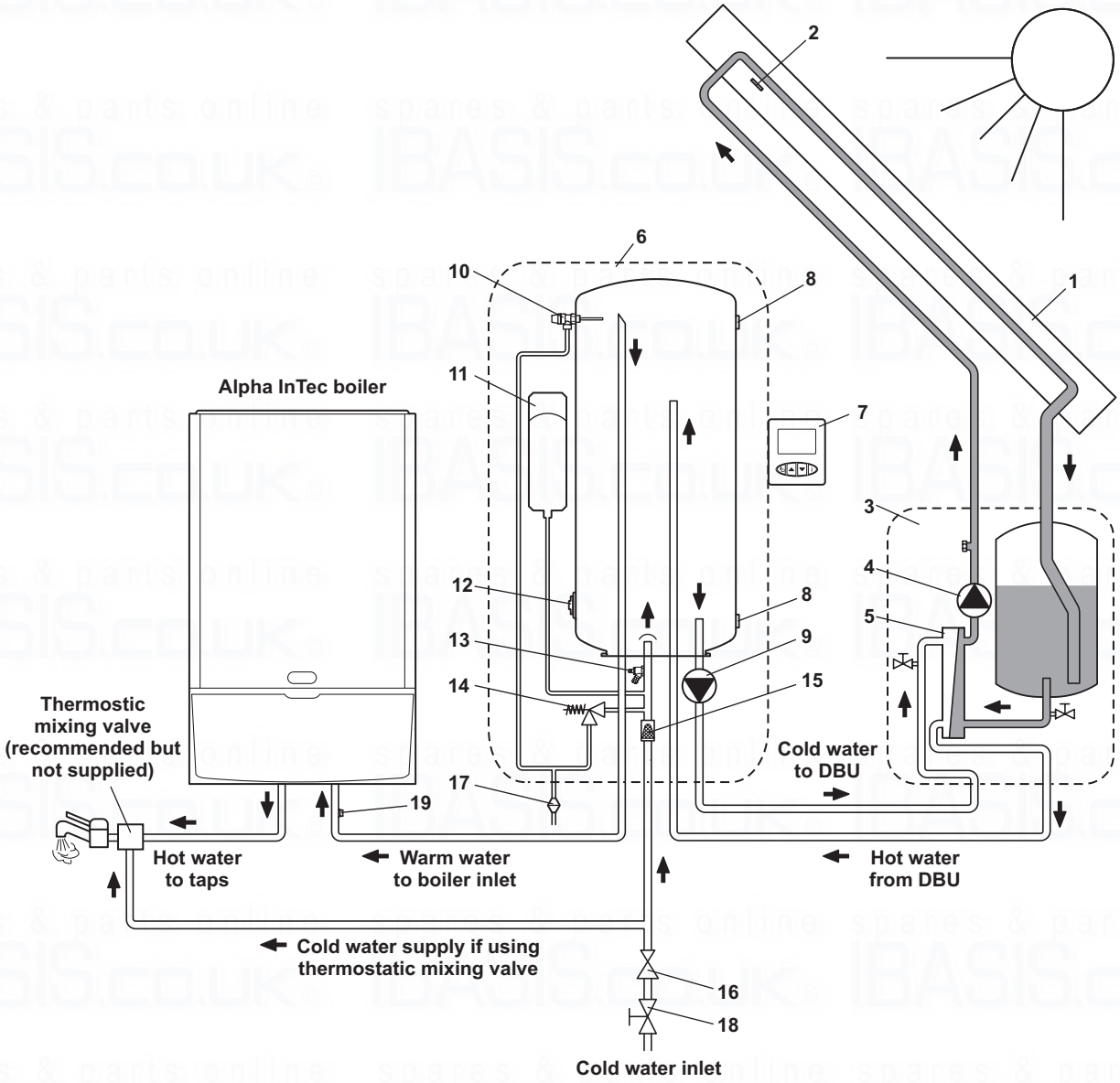

1 Solar collector
2 Collector temperature sensor
3 Drain back unit (DBU)
4 DBU pump
5 DBU heat exchanger
6 Solar cylinder
7 Control unit
8 Temperature sensors
9 Solar cylinder pump
10 Temperature and pressure relief valve
11 Expansion vessel
12 Immersion heater boss (use Alpha immersion kit only)
13 Drain point for cylinder
14 Pressure relief valve
15 Inlet filter
16 Pressure reducing valve
17 Tundish
18 Isolation valve
19 Boiler inlet sensor

Fig. 1

3 GENERAL INFORMATION

3.1 ELECTRICAL SUPPLY

The Solar system requires a 230/240 V ~ 50 Hz mains supply, fused at 3 A - **The system must be earthed.**

There must only be one common isolator, providing complete electrical isolation, for the Solar system.

This system has been fitted with a supply cable, however, if it is necessary to fit a cable use PVC insulated cable not less than 0.75 mm² (24 x 0.2 mm) to BS 6500 Table 16. The system should be connected to a fused three pin plug and unswitched shuttered socket outlet (both complying with BS 1363), or a fused double pole switch with a contact separation of at least 3 mm in both poles.

Note: There is no electrical connections between the boiler and the Solar system. Therefore, it is recommended that the Solar system electrical isolation is completely separate to the boiler and any external controls isolation.

All wiring must be in accordance with the current IEE Wiring Regulations (BS 7671).

3.2 DOMESTIC HOT WATER SYSTEM

Ensure that the cold mains and hot water pipes do not have any dead legs of pipework.

The mains water supply must be first connected to cold fill isolation valve and pressure reducing valve supplied with the system. The incoming mains water pressure to the cylinder is then regulated to 2.5 bar by the pressure reducing valve.

However, all taps and mixing valves used with the hot water system must be suitable for operating at a pressure of up to 8 bar, any cold connections to mixing and thermostatic type taps and showers must be taken from the solar cold feed after the pressure reducing valve to balance the pressure and prevent any back feeding into the solar system.

The boiler inlet sensor supplied with the solar system should be connected to the boiler control panel (low voltage terminals 8 and 9) and the sensor clipped to the boiler inlet pipe to measure the temperature of the incoming solar water and give better control of the outlet temperature and boiler efficiency.

Note: The hot water control thermostat on the combination boiler **must always** be turned to maximum.

To ensure economic use, the pipe runs to the combination boiler and taps should be in 15 mm copper pipe and be as short as possible. Where possible the pipework should be insulated to reduce heat loss.

Thoroughly flush out the mains water supply pipe before connecting it to the boiler and solar cylinder to avoid the danger of dirt or foreign matter entering the system. Ensure the filter in the cold fill valve assembly is clear.

The temperature of the water in the solar cylinder is restricted to a maximum of 70°C. At this temperature the DBU pump is switched off until the cylinder temperature is reduced.

To prevent high temperatures at the hot water taps, it is recommended that a thermostatically controlled mixing valve is fitted after the boiler. As shown in Fig. 1.

If required for electrical backup heating, an optional immersion heater kit is available, Part No. 3.023153.

3.3 UNVENTED HOT WATER STORAGE SYSTEM

The installation is subject to Building Regulations approval and the Local Authority must be notified of the intention to install.

Discharge pipe - The discharge pipes from the temperature/pressure and expansion relief valves are pre-formed and factory fitted to the cylinder.

Tundish - The tundish supplied must be connected underneath the cylinder, as shown in Fig. 1, so that it is visible to the User and away from electrical devices. The minimum size of the discharge pipe downstream of the tundish is given in the following table.

Sizing of copper discharge pipe 'D2' - refer also to Fig. 2 and 3				
Valve outlet size	Minimum size of discharge pipe 'D1' to tundish	Minimum size of discharge pipe 'D2' from tundish	Maximum resistance allowed, expressed as a length of straight pipe (i.e. no elbows or bends)	Resistance created by each elbow or bend
G½	15 mm	22 mm	up to 9 m	0.8 m
		28 mm	up to 18 m	1.0 m
		35 mm	up to 27 m	1.4 m

The discharge pipework from the tundish:-

1. Shall fall continuously through its length.
2. Shall be of a heat resistant material, e.g. metal.
3. Shall not be fitted with any valves or taps.
4. Shall discharge to a safe visible position, e.g. into a gulley.
5. Shall have a minimum of 300 mm straight pipework directly from the tundish.

Note: Where children may play or otherwise come into contact with discharges, a wire cage or similar guard must be positioned to prevent contact whilst maintaining visibility.

Given below are suggested methods of terminating the discharge pipe safely.

Where a single pipe serves a number of discharges, such as in blocks of flats, the number served should be limited to not more than 6 systems so that any installation can be traced reasonably easily. The single common discharge pipe should be at least one pipe size larger than the largest individual discharge pipe to be connected.

If the system is installed where discharges from safety devices may not be apparent, i.e. in dwellings occupied by blind, infirm or disabled people, consideration should be given to the installation of an electronically operated device to warn when discharge takes place.

a. Low level termination

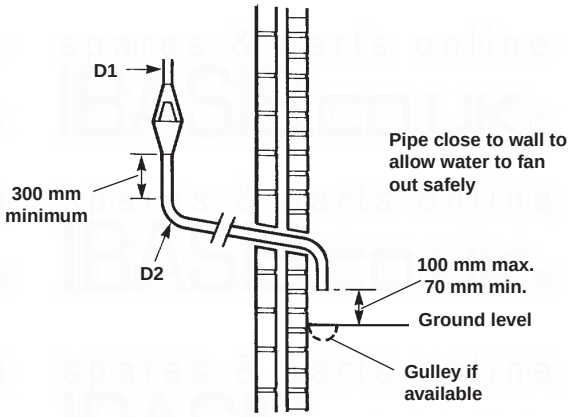

Fig. 2

b. High level termination

At high level, discharge onto a roof is acceptable providing the roof is capable of withstanding high temperatures and there is a distance of 3 m from any plastic guttering systems that would collect such discharge.

Note: The discharge will consist of scalding water and steam. Asphalt, roofing felt and non-metallic rainwater goods may be damaged by such discharges.

c. Termination into a hopper

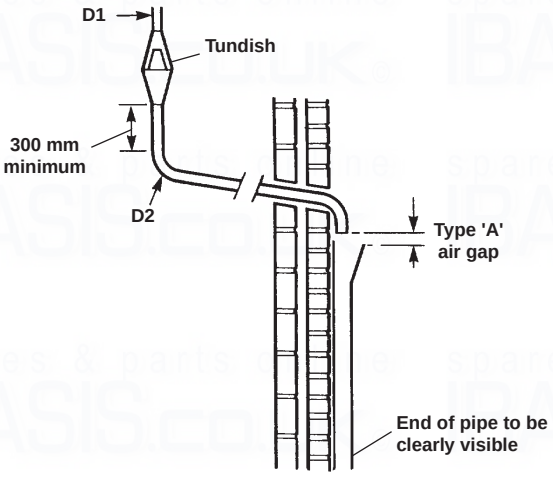

Worked example:-

The example below is for a G½ temperature relief valve with a discharge pipe (D2) having four elbows and a length of 7 m from the tundish to the point of discharge.

From the table on page 7:-

Maximum resistance allowed for a straight length of 22 mm copper discharge pipe (D2) from a G½ temperature relief valve is 9 m.

Subtract the resistance for four 22 mm elbows of 0.8 m each = 3.2 m.

Therefore the maximum permitted length equates to 9 - 3.2 = 5.8 m

5.8 m is less than the actual length of 7 m therefore calculate the next largest size.

Maximum resistance allowed for a straight length of 28 mm pipe (D2) from a G½ temperature relief valve equates to 18 m.

Subtract the resistance for four 28 mm elbows at 1.0 m each = 4 m.

Therefore the maximum permitted length equates to 18 - 4 = 14 m

As the actual length is 7 m, a 28 mm (D2) copper pipe will be satisfactory.

Fig. 3

3.4 SOLAR CYLINDER DESCRIPTION - Figs. 4

Positioning

The SolarSmart 100 cylinder must be installed on a flat vertical wall which is capable of supporting the weight of the cylinder when full (140 kg).

The cylinder may be installed in any room or internal frost free space, although particular attention is drawn to the requirements of the current IEE Wiring (BS7671) Regulations, and in Scotland, the electrical provisions of the Building Regulations applicable in Scotland, with respect to the installation of the cylinder in a room or internal space containing a bath or shower. When the cylinder is installed in a room containing a bath or shower, it must not be possible for a person using the bath or shower to touch any electrical switch or cylinder control utilizing mains electricity.

The bottom of the solar cylinder must be located within 6 metres vertically of the top of the drain back unit.

Dimensions

The dimensions of the cylinder and clearances required for servicing are shown in Fig. 4.

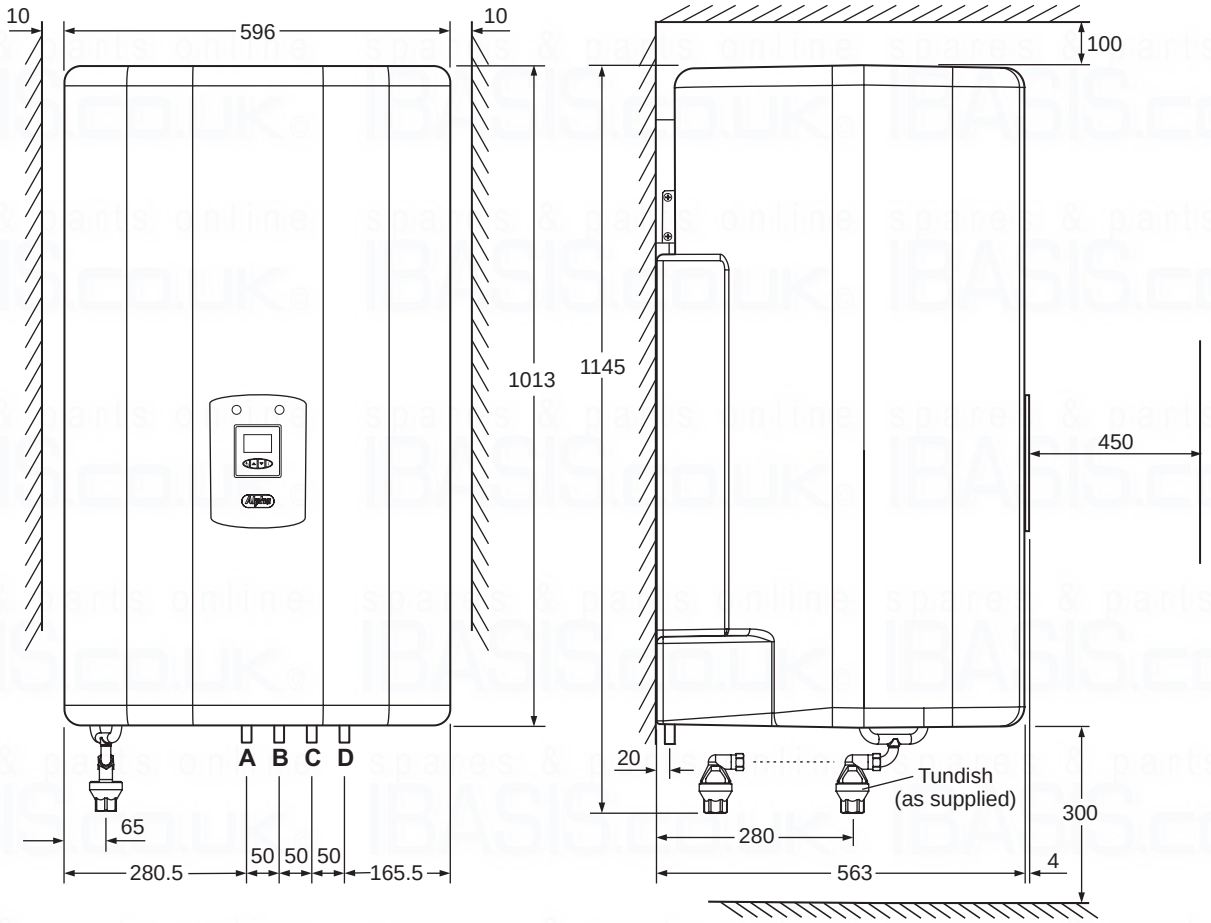

Cylinder Connections

A	Water outlet to boiler	15 mm
B	Cold water inlet	15 mm
C	Return from DBU	15 mm
D	Flow from cylinder to DBU	15 mm

As it is a requirement that the discharge pipe must fall at least 300 mm directly from the tundish we recommend that it is moved towards the rear wall using a suitable length of 15 mm pipe and a ½" to 15 mm adaptor.

Fig. 4

Water connections

The connections at the bottom of the cylinder are shown in Fig. 4.

Note: Use compression fittings only on the cylinder connections. Use a minimum of 1 metre of copper pipe from the cylinder for the domestic water inlet and outlet connections.

3.5 DRAIN BACK UNIT (DBU) INFORMATION - Fig. 5

Positioning

The DBU must be located below the solar collector bottom edge by no more than 4 m vertically to enable the pump to circulate the water around the collector. The pipework from the collector to the DBU **must** fall continuously by a minimum of 40 mm per metre to allow the water to drain back into the DBU.

The pipework **must be** insulated with high temperature insulation.

Dimensions

The dimensions of the DBU and clearances required for servicing are shown in Fig. 5.

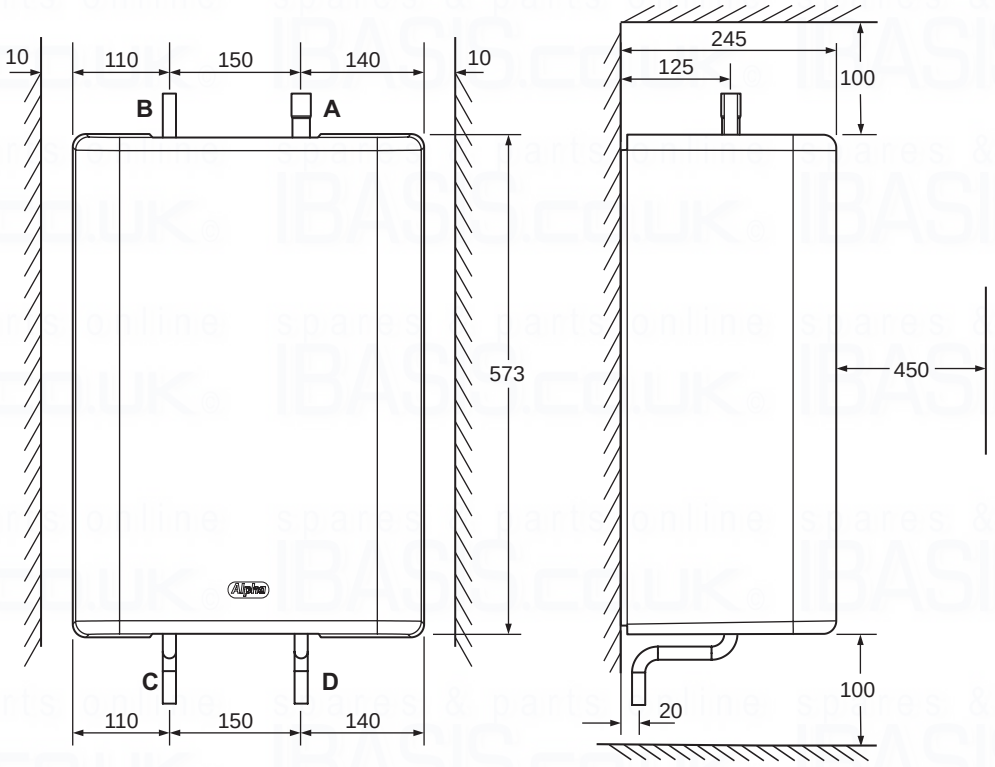

DBU Connections

A	Return from collector to DBU	22 mm
B	Flow from DBU to collector	15 mm
C	Flow from cylinder to DBU	15 mm
D	Return to cylinder from DBU	15 mm

Fig. 5

Water connections

The connections at the top and bottom of the DBU are shown in Fig. 5.

Note: Use copper pipe and compression fittings only on the pipework between the DBU and solar collector.

3.6 SOLAR COLLECTOR INFORMATION

The solar collectors are certified and are in compliance with the Solar Keymark Standard. They can be mounted on all roof types with the use of the appropriate fixing kits available.

The solar energy supplied by a system varies with the orientation and tilt of the collector, which will usually be determined by the existing roof. However, the predicted variation is slight. For a collector facing anywhere between SE and SW and tilted between 15° and 75° from the horizontal, the annual solar energy supplied will be at least 90% of that obtained at the optimum collector position (South at 30°).

It should be remembered that shading from trees, buildings etc., can produce a significant decrease in system performance, and collectors should be positioned to minimise shading from the sun.

One solar collector is required, upto a maximum of two collectors can be installed using one of the following methods:

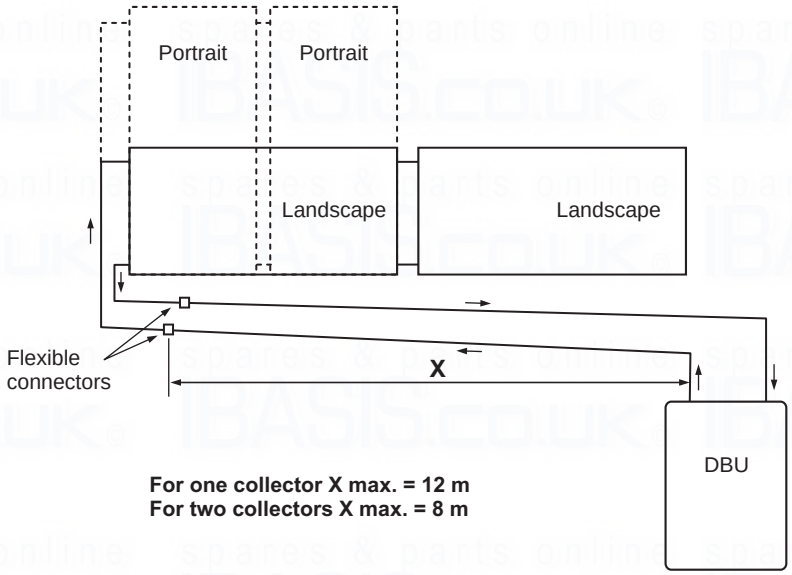

Fig. 6

a. Integration of the collector into the tiles of a pitched roof.

Using the Alpha In Roof Flashing kit (portrait or landscape) collectors can be integrated into the structure of a pitched roof as shown in Fig. 7. The roof must have an inclination of more than 15° and the tiles used with the flashing kit must be suitable to ensure that the installation is weatherproof. Full details of this type of installation are provided in the instructions supplied with the kit.

Note: When using two panels only a portrait flashing kit is available. If two landscape panels are used then use two individual flashing kits or two On Tile kits.

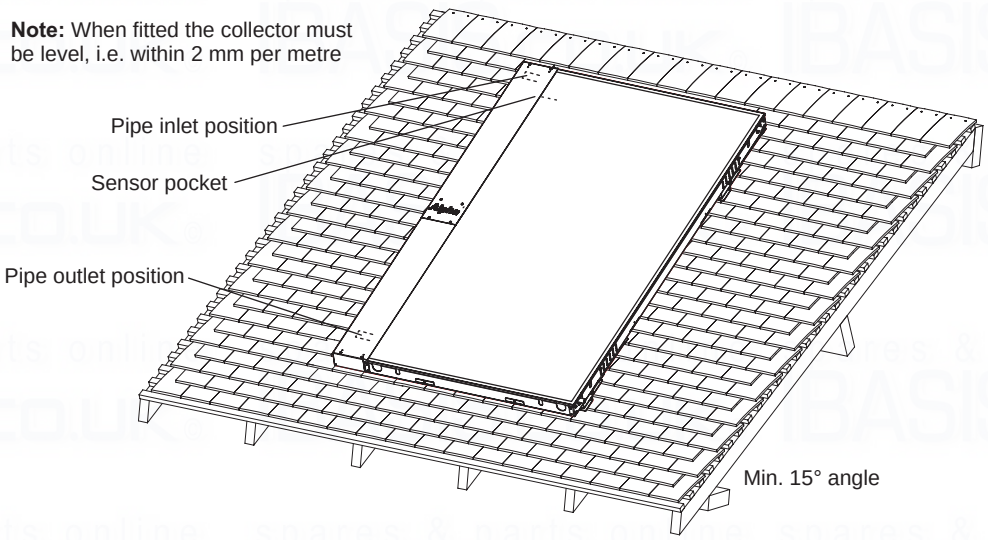

Fig. 7 - Portrait

b. Collector mounted on a pitched roof.

Using the Alpha On Tile Kit portrait or landscape collectors can be mounted on a pitched roof as shown in Fig. 8. The roof must have an inclination of more than 15°. Full details of this type of installation are provided in the instructions supplied with the kit.

Full details of this type of installation are provided in the instructions supplied with the kit.

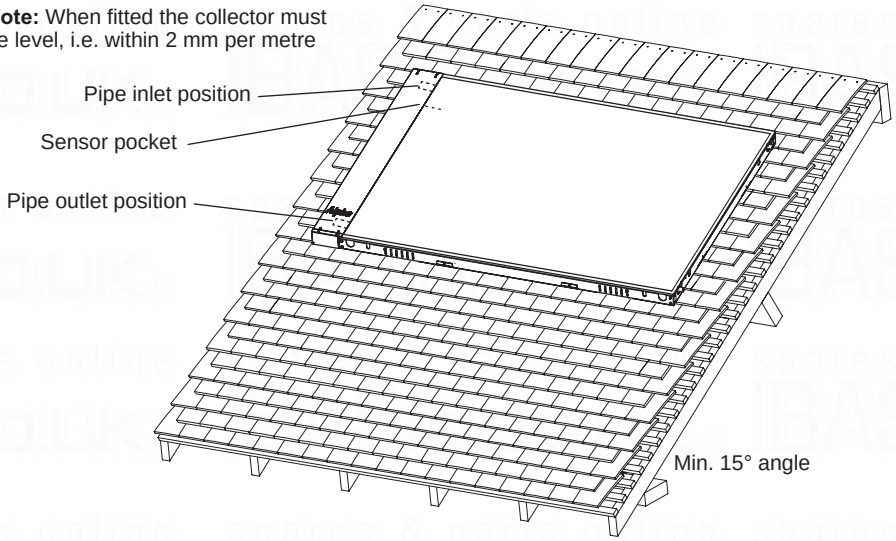

Fig. 8 - Landscape

c. Positioning of a landscape collector onto a flat roof.

Using the Alpha Flat Roof Kit, the collector is mounted on the framework supplied. The collector is fixed at an inclination of 30° and ballast or fixings must be used to secure the frame in the required position. Refer to Fig. 9 for details of location of the drain back unit in relation to the collector. Full details of this type of installation are provided in the instructions supplied with the kit.

Full details of this type of installation are provided in the instructions supplied with the kit.

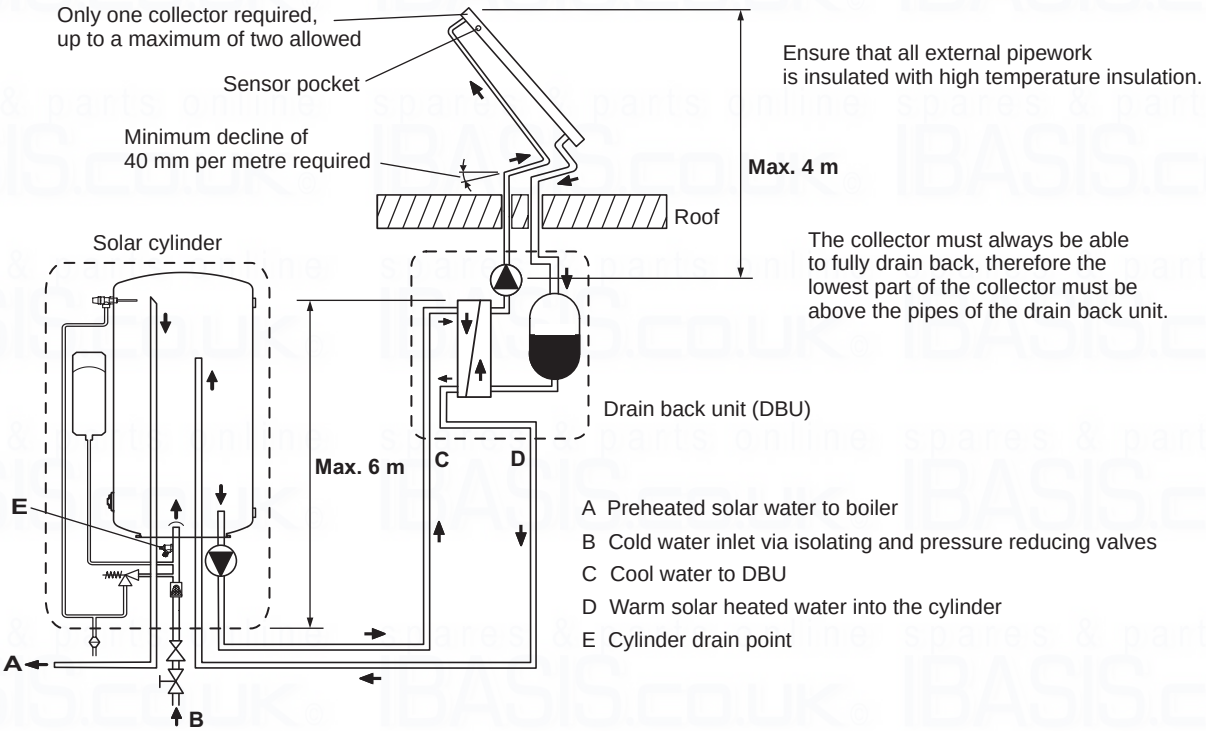

Fig. 9

The collector temperature sensor supplied must be fitted into the sensor pocket on the collector (see Figs. 7, 8 and 9) and the cable fed through the roof with the collector pipes.

The system should be filled and commissioned within one week of installation, to prevent heat build-up in the collector which may damage the collector.

4 INSTALLATION

4.1 UNPACKING

The SolarSmart 100 system is supplied in two boxes as follows:

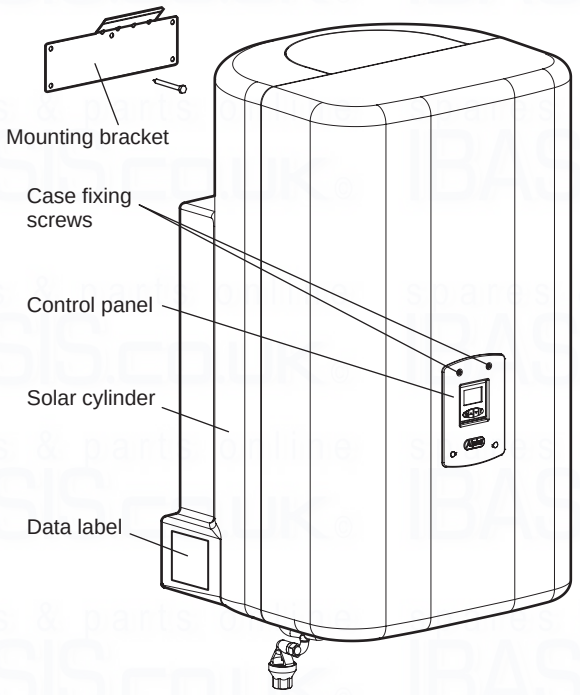

Fig. 10 - Box 1

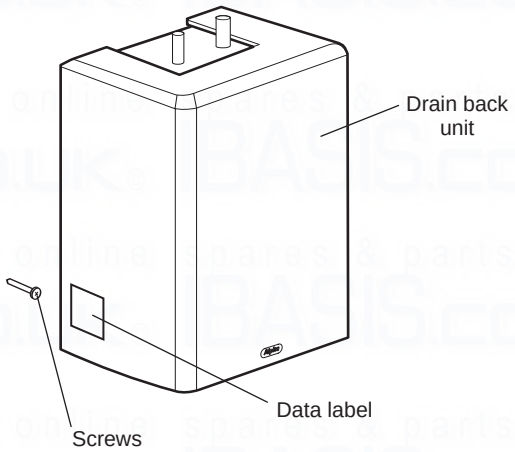

Fig. 11 - Box 2

Box 1 - Solar cylinder

Contents: Solar cylinder with case and control panel
Wall mounting bracket and Screw pack
Wall template
Pressure reducing and Isolation valves
Boiler inlet sensor
Fitting instructions and Overstick label
Extension cable for collector sensor
Tundish and connection pipes

Box 2 - Drain back unit

Contents: Drain back unit
Screw pack
Wall template

The following items are also required to complete the installation:

1. Solar portrait collector..... Part No. 3.023011.
2. Solar landscape collector ..... Part No. 3.023012.
3. Portrait connection kit (sensor, flexible connection pipes and fittings)..... Part No. 3.023150.
4. Landscape connection kit (sensor, flexible connection pipes and fittings)..... Part No. 3.023151.
5. Twin collector connecting kit (fittings to connect two collectors together)..... Part No. 3.023152.
6. Solar collector In Roof Flashing kits :-
   a. Single collector (portrait)..... Part No. 3.023230.
   b. Twin collectors (portrait only) ..... Part No. 3.023231.
   c. Single collector (landscape)..... Part No. 3.023232.
7. Solar collector On Tiles kits :-
   a. Single collector (portrait or landscape) ..... Part No. 3.023223.
   b. Twin collectors (portrait or landscape) ..... Part No. 3.023241.
8. Solar collect On Slates kits :-
   a. Single collector (portrait or landscape) ..... Part No. 3.023224.
   b. Twin collectors (portrait or landscape) ..... Part No. 3.023243.
9. Single Flat Roof Frame kit (landscape only)..... Part No. 3.023229.
10. Alpha combination boiler, flue and thermostat control.
11. Thermostatic mixing valve.
12. High temperature 15 mm pipe insulation (150°C plus).
13. Pipe securing clips - it is important that all pipework is supported and a fall maintained between the collector and drain back unit.

4.2 LOCATION and CLEARANCE REQUIRED

Refer to Section 3.4, 3.5 and 3.6 before locating the solar cylinder, drain back unit and solar collector.

4.3 INSTALL THE COLLECTOR

Refer to installation instructions supplied with the Solar collector mounting kit to install the collector.

4.4 FIT THE SOLAR CYLINDER - Fig. 12

The cylinder must be installed on a flat vertical wall which is capable of supporting the weight of the full cylinder (see Section 2.3). The cylinder should be secured to the wall using the mounting bracket and fixings supplied.

Note: The cylinder contains an electrical pump and consideration to noise transmission through walls and pipes should be considered when positioning the cylinder.

1. Decide on the position of the cylinder, taking into consideration the clearances and the maximum allowed distances from the drain back unit and collector. Refer to Sections 2.3 and 2.6.
2. Position the template supplied in the required position, ensuring it is level, (note that the template includes the minimum clearances required) and mark the positions of the fixing holes. Drill the holes to suit the fixing supplied or alternative fixings suitable for the mounting surface/wall.
3. Secure the mounting bracket to the wall, using the plugs and screws supplied.
4. Remove the two screws (top of the control panel) as shown in Fig. 10 securing the cylinder case and carefully pull off the case.
5. Lift the cylinder and carefully hang it onto the mounting bracket as shown in Fig. 13
6. Adjust the cylinder on the mounting bracket until the bottom fixing holes are lined up then secure the cylinder to the wall with the two screws supplied as shown in Fig. 14.

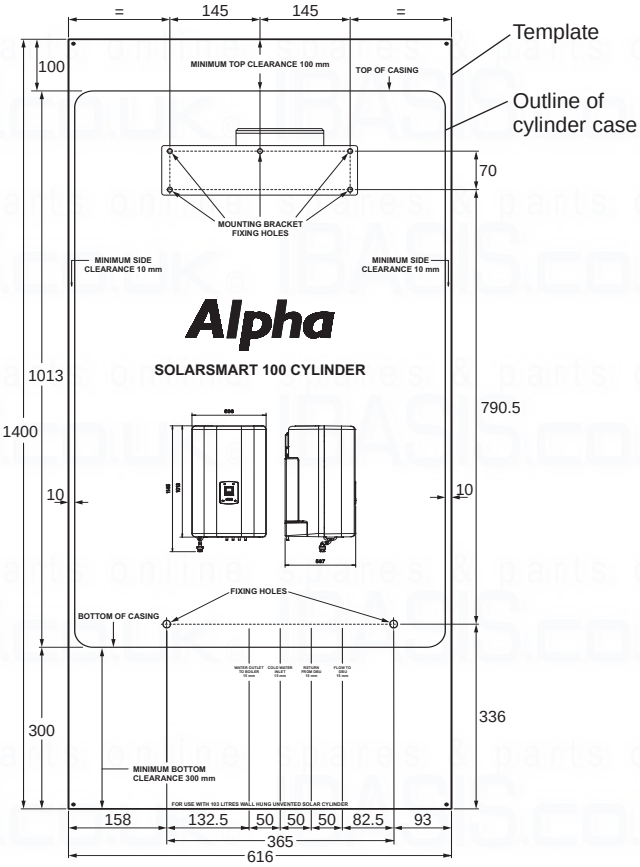

Fig. 12

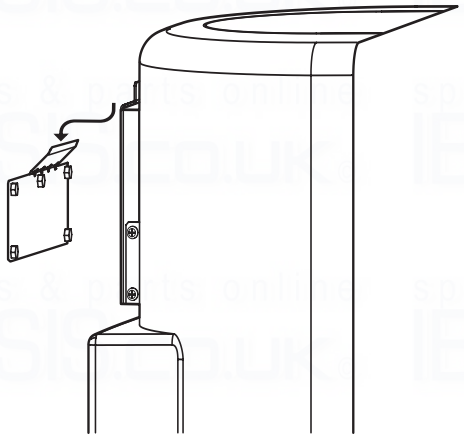

Fig. 13

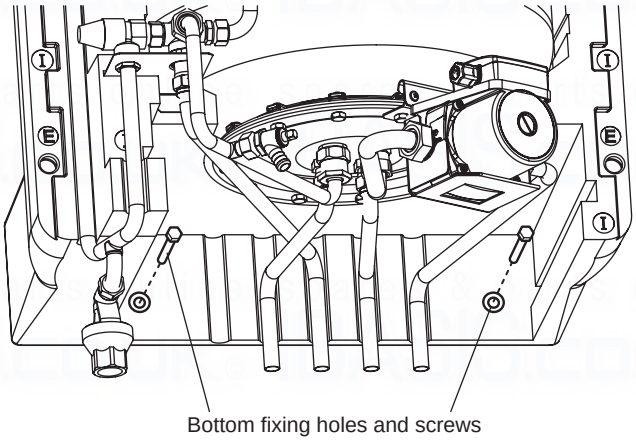

Fig. 14

4.5 FIT THE DRAIN BACK UNIT (DBU) - Figs. 15, 16, 17 or 18

The DBU **must be** fitted vertically, the unit can secured using two fixings and its built-in wall bracket, as shown in Fig. 16 or four screws directly into the wall as shown in Fig. 17. Screws and plugs are supplied with the unit. Using the template supplied will ensure the correct positioning of the fixing holes.

1. Decide on the position of the DBU, taking into consideration the clearances and the maximum allowed distances from the drain back unit and collector. Refer to Fig. 5.
2. Position the template supplied in the required position, ensuring it is level, (note that the template includes the minimum clearances required) and mark the positions of the fixing holes. Drill the holes to suit the fixing supplied or alternative fixings suitable for the mounting surface/wall.

   If using only the top fixings, fit two of the screws supplied with the heads about 5 mm proud so that they will locate in the keyhole slots on the fixing bracket (see Fig. 16).
3. Remove the front cover of the DBU (it is a push fit). Offer the DBU into position and hang it on the two fixing holes.

Note: All pipework from the collector must always slope down towards the drain back unit (at least 40 mm per metre). There **must not** be any part of the pipework that will allow water to collect.

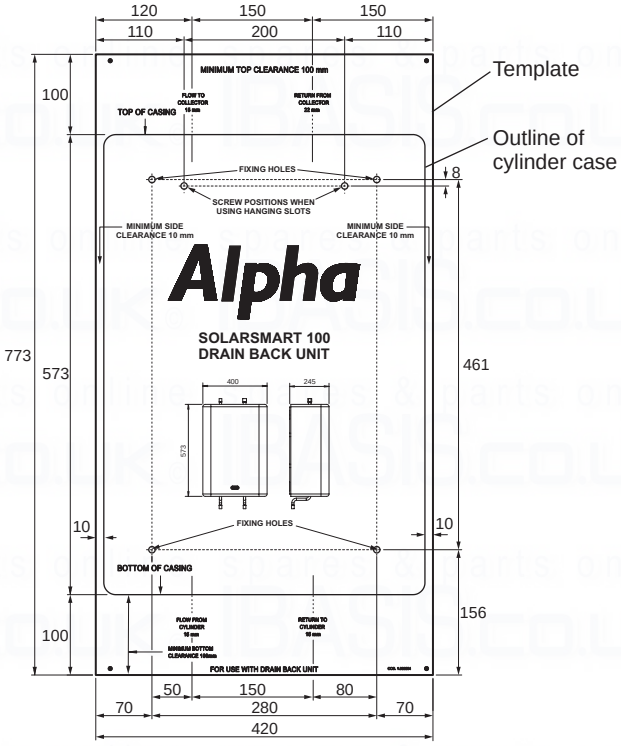

Fig. 15

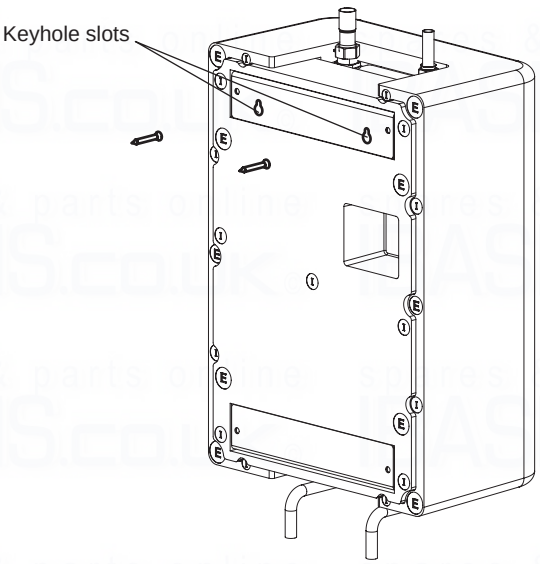

Fig. 16

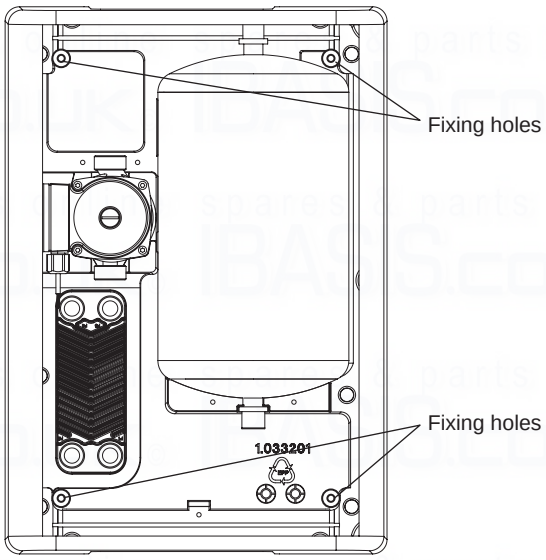

Fig. 17

4.6 FIT THE BOILER AND CONNECT THE PIPEWORK

1. An Alpha combination boiler should be used with the SolarSmart system. Install the boiler as described in the instructions supplied with the boiler.
2. Connect the outlet from the solar cylinder directly to the boiler cold water inlet connection, as shown in Fig. 1.

   If the boiler has a Seasonality valve fitted it must be fully opened (turn adjusting screw fully clockwise).

   Notes: a. If the solar system is being fitted to an existing boiler installation, the mains water inlet must be re-routed to the inlet of the solar cylinder.

   b. It is recommended that a thermostatic mixing valve is fitted in the hot water outlet before the taps.
3. Clip the boiler inlet sensor (supplied with the cylinder) to the boiler inlet pipe as close to the boiler as possible. This should be connected to the boiler low voltage terminals 8 and 9 (DHW inlet sensor), the polarity of the connections is not important. Refer to the boiler wiring diagram.
4. A self adhesive label is supplied with the cylinder. This label **must** be located adjacent to the domestic hot water thermostat knob which must be set to max. as shown in Fig. 18. This will ensure that the hot water temperature from the boiler will be approximately 60°C.

   Note: The User must be informed of the purpose of this label, which **must not** be removed.

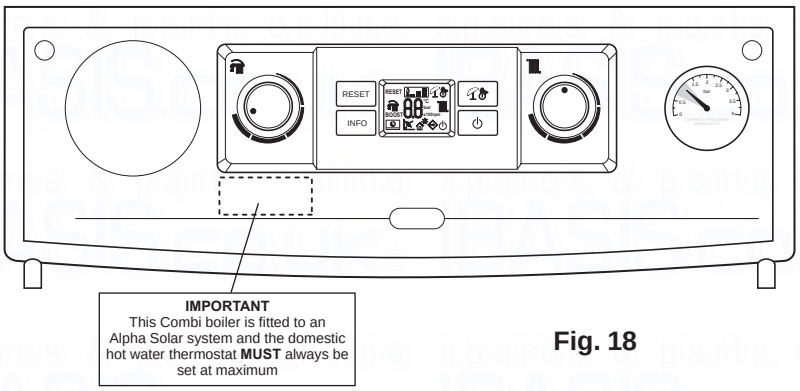

Fig. 18

4.7 CONNECT THE PIPEWORK

Refer to Figs. 1 and 19 and the wall templates when connecting the pipework.

1. Thoroughly flush out all the water pipework.

   Ensure that all the plastic caps are removed from all connections.

   Note: If soldering union bends, ensure that the bends are not connected to the valves etc., otherwise the internal seals may be damaged, (soldered connections cannot be used between the solar collector and DBU, or direct to the cylinder connections).
2. Connect the system pipework to the boiler and the pressure reducing and isolation valves, supplied, in the mains cold water inlet to the cylinder. See Figs. 1 and 19.

   Do not forget that all pressure relief valve discharge pipes must be routed clear of the boiler and cylinder to a drain in such a manner that they may be seen, but cannot cause injury to persons or property. Refer to Section 3.3 and the boiler instructions. Refer to Fig. 4 when connecting to the cylinder tundish.

   This pipework must be installed as recommended in Unvented Hot Water Storage System, see Section 3.3.
4. Check that the pressure in the cylinder expansion vessel (see Fig. 20) is 2.5 bar. If it is not, adjust the pressure to give 2.5 bar. Check when the system is not pressurised (drained).
5. Connect the mains water supply and complete the pipework. Thoroughly flush the water pipework. Refer to Domestic Hot Water System, Sections 3.2 and 3.3.
6. Ensure that all the valves are closed (spindle flats at right angles to valve) and do not turn on the water supply at this stage.

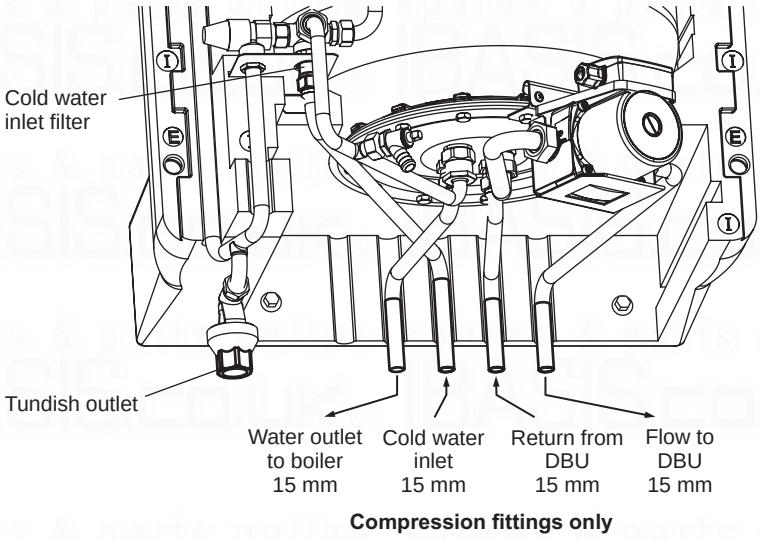

Fig. 19

4.9 ELECTRICAL CONNECTIONS - See Wiring Diagram Section 9

1. If the case is not already removed, remove the two screws (top of the control panel) securing the cylinder case and carefully pull off the case.

   The cylinder sensors and cylinder pump are already connected.

2. Remove the two screws securing the terminal block cover to the left of the control unit as shown in Fig. 20.

3. **Connect the Drain Back Unit pump -** The drain back unit pump is fitted with a 1.9 m cable. Route the cable to the solar cylinder control unit through the hole in the bottom of the cylinder case (as indicated in Fig. 20) and pass it through a cable clamp.

   The DBU cable can be extended if required using standard mains 3-core flex.

   Connect the Brown wire to terminal 12, Blue wire to terminal 13 and Green/Yellow wire to ⏚ on the terminal block.

   Ensure that the cable is secured in the cable clamp.

4. **Connect the Collector Sensor -** The sensor is supplied with a 3 m cable, a 9 m extension cable is also supplied with the cylinder.

   Route the cable to the solar cylinder control box through the hole in the bottom of the cylinder case (as indicated in Fig. 20) and pass it through a cable clamp.

   Connect the White and Red wires to terminals 45 and 46 (the polarity is not important) on the terminal block.

   Ensure that the cable is secured in the cable clamp.

5. **Connect the Mains Supply**

   The solar cylinder has been fitted with a 2.5 m mains supply cable. However, if it is necessary to fit an alternative supply cable refer to Section 3.1 and release the cable clamp. Connect the new lead as follows:

   Brown wire to 2, Blue wire to 1 and Green/Yellow to the earth point using a suitable spade connector.

   Note: Ensure that the length of the earth wire is such that if the supply cable is pulled out of its clamp the live and neutral wires become taut before the earth wire.

6. **Fitting the optional Alpha immersion heater**

   Remove the blanking plug and washer as shown in Fig. 21. Insert the element and secure in position using a new sealing washer.

   Pass the immersion heater cable through a cable clamp and connect the wires, Brown to terminal 69, Blue to terminal 70 and Green/Yellow to ⏚ on the terminal block.

   Ensure that the cable is secured in the cable clamp.

7. Replace the connector block cover but do not switch on the electrical supply at this stage.

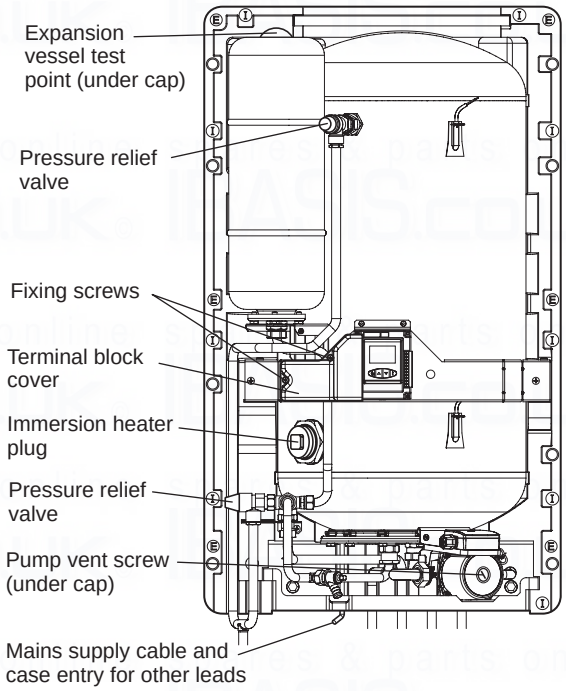

Fig. 20

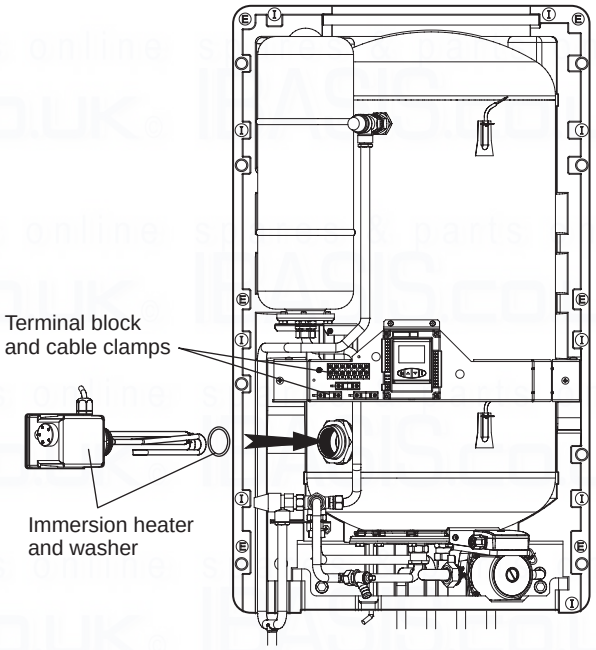

Fig. 21

5 COMMISSIONING

When commissioning the system, ensure the Benchmark Checklist at the back of these instructions is completed.

5.1 FILL THE SOLAR CYLINDER

1. Check that all the mains water connections are tight and any drain valves are closed.
2. Open the mains water inlet valve. Thoroughly flush out the hot water system by turning on all the hot water taps and allow the water to flow until no air is present, this will automatically vent the cylinder of air. Turn off each tap.
3. It is important to vent the solar cylinder and solar pump.

   Vent the cylinder using the vent point in the drain back unit as shown in Fig. 22. Vent the cylinder pump by unscrewing the centre cap (see Fig. 20) and rotate the spindle using a small screwdriver until water runs from it and then replace the cap. Ensure the area around the pump is dry.
4. Isolate the mains inlet and drain the cylinder to remove any debris that may have collected in the cylinder. Refill and vent the system as described above.
5. Check the operation of the two pressure relief valves (see Fig. 20) by turning the head anti-clockwise until it clicks. The click is the valve lifting off its seat allowing water to escape from the system - check that this is actually happening.

5.2 FILL THE DRAIN BACK UNIT

1. Unscrew the level point cap from the fitting in the flow pipe above the pump (Fig. 22).
2. Fill using standard domestic water with a funnel and hose via the 22 mm collector return connection until the water spills from the fill level point.
3. Carefully fill the drain back unit until water overflows from the fill level point in the pipe above the pump. This indicates the correct fill level has been reached.

   Note: Do not overfill.
4. Replace the level point cap to the fitting in the pipe above the pump.
5. Check that all the wiring has been correctly installed and that all the terminal connections are tight.

   Switch on the electrical supply and press the On/Off button on the control panel (see Fig. 23) to start the system.
6. Check for any leaks and replace the front cover.
7. Complete the details of the installation in the Benchmark Checklist at the back of these instructions.

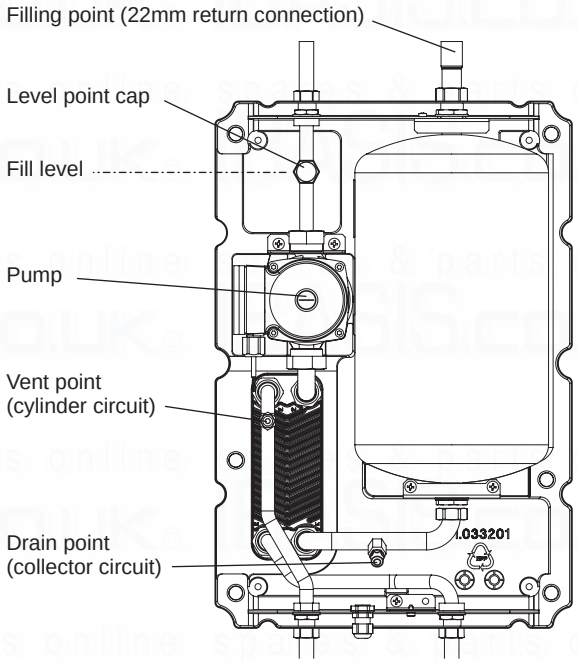

Fig. 22

5.3 CONTROL UNIT DISPLAY - Fig. 23

The Solar cylinder is fitted with a control unit with integrated display panel and push button controls. The display indicates the working modes of the system with symbols to indicate the working components of the complete system.

When first switched on, the display will show all the symbols as shown in Fig. 23 for 2 seconds then the system schematic is displayed and the countdown from 70 seconds to 0 will start (see Fig. 24). During this countdown the unit does a self-diagnosis of all the sensors and pumps. If the collector temperature is between 10 and 130°C the drain back unit pump will run for a short period to run a test program, after which the system is ready for use.

When all the self-diagnostic procedures have been completed the system will start normal operation.

After the 70 second countdown the normal operating display will appear with a schematic diagram of the system and showing two temperatures. The top value indicating the temperature at the collector sensor (S3) and the bottom value indicating the upper cylinder sensor temperature (S1) as shown in Fig. 25.

The system can be turned on and off using the On/Off button, however we recommend that the system is left in the on position permanently and it will control itself depending on the solar energy available and the cylinder temperature.

If there is enough solar light at the collector the cylinder pump will run, shortly followed by the drain back unit pump.

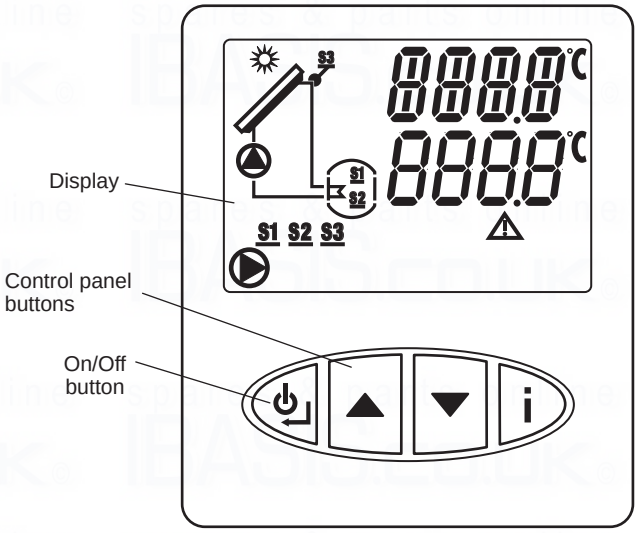

Fig. 23

5.4 CONTROL PANEL BUTTONS AND DISPLAY SYMBOLS

Button	Description	Function
	On/Off	Switches the system on and off
	Increase	Not used in this instance
	Decrease	Not used in this instance
i	Info	Sensor temperature info: Keep it pressed in for 1 sec. displays sensor S2 and S3, press in once more to display sensors S1 and S3 (S3 is always the upper temperature on the display)

Symbol	Description	Function	
		State	**Decription**
	DBU pump	On Flashing	DBU pump in standby state DBU pump operational
	Cylinder pump	On Flashing	Cylinder pump in standby state Cylinder pump operational
	Warning	Flashing	Fault code will be displayed
	Sun	Flashing	Solar system operational
°C	Degrees celsius	On	Unit of temperature
8888 8888	Digits	On	Display temperature, parameters values and fault codes
S1 S2 S3	Temperature sensors	On	Active sensors
	Solar cylinder	On	Cylinder state correct
	Solar collector	On	Solar collector state correct

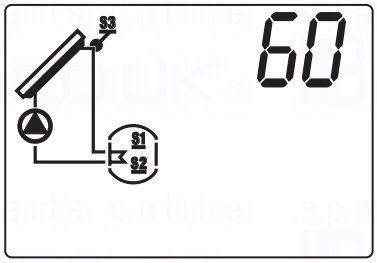

Fig. 24

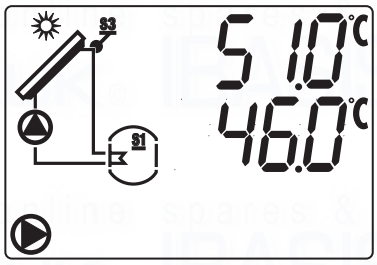

Fig. 25

5.5 USER INFORMATION

The User must be advised (and demonstrated if necessary) of the following important points:-

1. How to turn the SolarSmart system on and off. It is recommended the system is always left on.
2. Explain what information is shown on the display and in the unusual case of a fault occurring, explain the fault codes that may be shown (see Section 10).
3. Show the User the position of the tundish discharge pipes
4. How important it is for the combination boiler hot water thermostat to be left at the maximum position (No. 9) and that it is the purpose of the label (Fig. 18) to maintain this and that the label must not be removed.
5. Weekly cleaning of shower heads and emptying shower hoses after use.
6. To avoid scalding; if thermostatic blending valves are not fitted, take due care and attention, especially with children and older people, when running a bath.
7. Ensure the Checklist at the back of these instructions has been completed after the unit has been installed and commissioned.
8. Leave these instructions with the User for use on future calls and for recording details in the Service Record at the back of these instructions.

6 SYSTEM OPERATION

6.1 WORKING PRINCIPAL - Fig. 26

The solar collector uses the energy of the natural light to heat the water being circulated around the collector. When the heated water enters the drain back unit, heat is transfer into the stored water via a heat exchanger. Stored domestic hot water is pumped from the bottom of the solar cylinder through the drain back unit heat exchanger where it is heated and returned to the cylinder.

When a hot water tap is turned on mains water flows into the bottom of the solar cylinder and hot water flows out of the top towards the boiler. If the boiler inlet sensor detects that the water from the cylinder is above 60°C the water flows directly through the boiler to the tap, if the temperature is less than 60°C the boiler heats up the water. As the temperature of the water entering the boiler is higher than the normal incoming mains water, less gas is required to heat the water to the set temperature of above 60°C thereby saving energy costs.

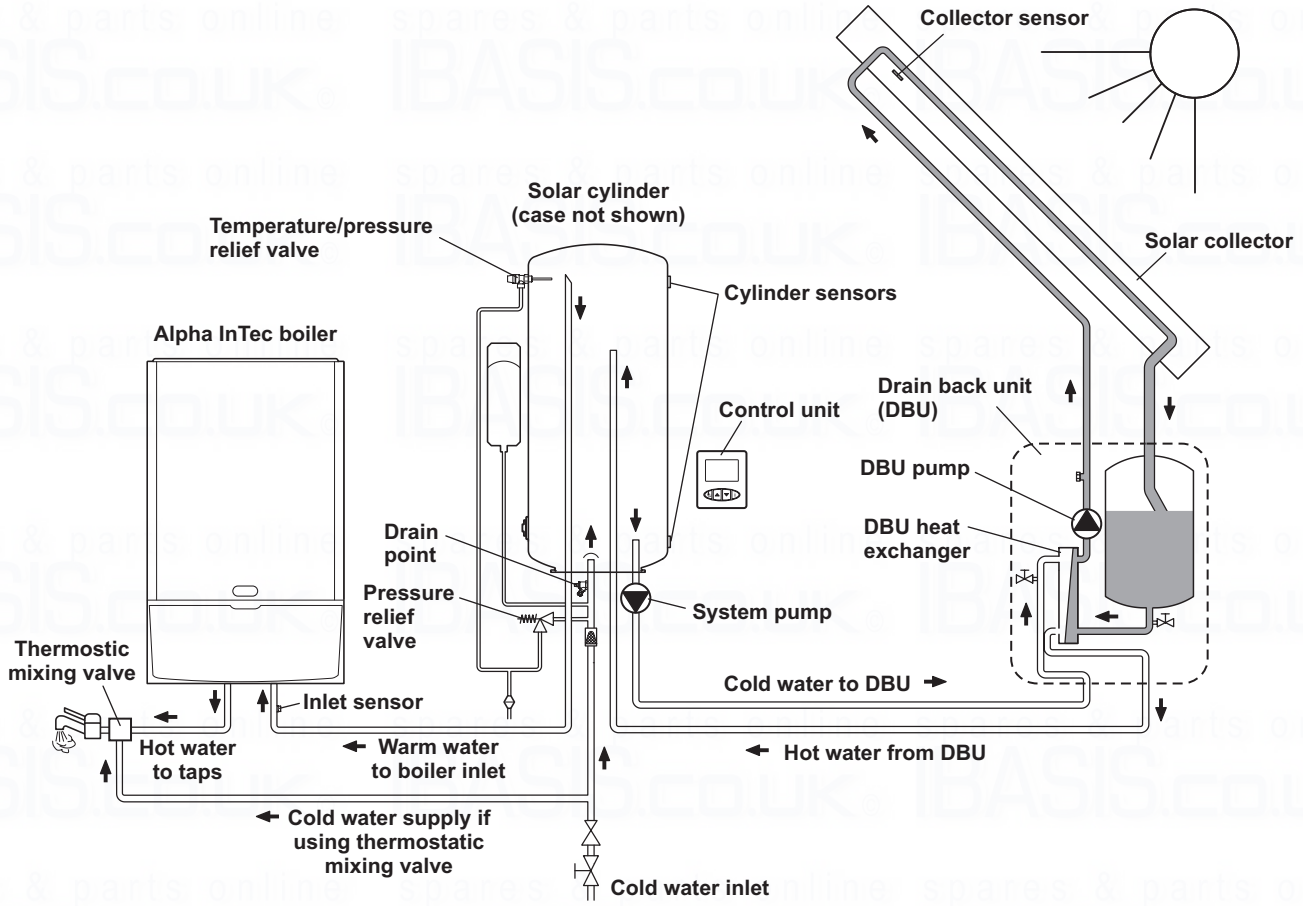

Fig. 26

6.2 OPERATION OF THE SOLARSMART SYSTEM - Fig. 26

Control

When the controls detect a collector sensor temperature that is at least 10°C higher than the lower cylinder sensor and the solar cylinder temperature is less than 65°C, the drain back unit pump will start to circulate water around the collector. At the same time that the drain back unit pump starts the cylinder pump will start at 10% of full speed to circulate the cylinder water through the drain back unit heat exchanger. The drain back unit pump will stop when the temperature difference between the collector sensor and the lower cylinder sensor falls to 3.5°C or the cylinder temperature reaches 70°C. The cylinder pump will continue to run for 120 seconds to collect any excess heat from the drain back unit then it will also stop.

When the pumps are operating, a flashing pump symbol will be visible in the display (see Fig. 23 and Section 5.4).

If a fault occurs, a flashing warning symbol (see Fig. 23 and Section 5.4) appears in the display and a fault code will be displayed. Refer to Section 10 for a list of fault codes and possible solutions.

Temperature display

The normal display will be as shown in Fig 25 with the collector (S3) and upper cylinder (S1) sensor temperatures shown.

S3 is the top reading and S1 the bottom reading.

Domestic hot water circuit

When a hot tap is opened, cold mains water enters the solar cylinder at the bottom forcing hot water out from the top to go to the boiler. If it is below 60°C the boiler fires to maintain a 60°C outlet, if the water is above 60°C the boiler does not fire and the hot water passes through the boiler to the hot outlet. The cylinder pump passes the cool water from the bottom of the cylinder through the drain back unit heat exchanger and hot water back to the cylinder.

Collector water circuit

The drain back unit pump is controlled by the control box. The collector water is circulated in a closed loop through the collector where it is heated then passes through the heat exchanger in the drain back unit where the heat is transferred to the domestic water from the cylinder.

Frost protection

The system will only operate when there is a 10°C differential between the cylinder temperature and the collector temperature.

Pumps

If the electrical supply is on and the solar system has not operated for 24 hours, the pumps will operate automatically every 24 hours, providing the collector temperature is above 10°C.

7 ROUTINE INSPECTION

To ensure efficient operation of the SolarSmart system, it is recommended that it is inspected and checked (by a competent person) as necessary at regular intervals.

Warning: Before removing any covers or working on the system, isolate the electrical supply.

The data badge (serial number) for the cylinder and DBU are located on the lefthand side of the case. See Figs. 10 and 11.

Always carry out electrical system checks, i.e. earth continuity, resistance to earth, short circuit and polarity with a suitable meter, after any electrical work has been carried out on the system.

Check the operation of the system before and after any servicing or replacement of parts.

7.1 IMPORTANT NOTES FOR ROUTINE INSPECTION

1. Run the system and check the operation.
2. Ensure that all system connections and fittings are sound.
3. Open the Solar cylinder's drain valve (Fig. 1, item 13) until the water from the bottom of the cylinder runs clear.
4. Inspect and clean, if required, the filter in the cold fill manifold assembly. See Fig. 19.
5. Check the operation of the pressure relief valve by turning the head anti-clockwise until it clicks. The click is the valve lifting off its seat allowing water to escape to the discharge pipe - check that this is happening and that the valve is not leaking after it has been operated,
6. Check the charge in the domestic hot water expansion vessel and re-pressurise, if necessary. See Fig. 20.
   Note: Only check the expansion vessel charge when the **system** pressure is zero, i.e. drained.
7. Record details of the service in the Service Record at the back of these instructions.

It is recommended that any service work is carried out by a competent person.

Warning: Before removing any covers or working on the system, isolate the electrical supply.

8 COMPONENT REPLACEMENT

The data badge (serial number) for the cylinder and DBU are located on the lefthand side of the case. See Figs. 10 and 11.

Always carry out electrical system checks, i.e. earth continuity, resistance to earth, short circuit and polarity with a suitable meter, after any electrical work has been carried out on the system.

Check the operation of the system before and after any servicing or replacement of parts.

Take care when removing items as they may still contain some water.

8.1 REMOVE THE CYLINDER CASE

Isolate the electrical supply before removing the case.

Remove the two screws (top of the control panel) as shown in Fig. 10 securing the cylinder case and carefully pull off the case.

8.2 DRAIN THE CYLINDER

Isolate the mains water supply and open a hot tap to release the pressure in the cylinder. Attach a hose to the drain point located at the bottom of the cylinder (see Fig. 27) and route the hose to a drain. Open the drain valve to drain the cylinder.

8.3 EXPANSION VESSEL

Drain the cylinder as described in Section 8.2.

Disconnect the union from the bottom of the expansion vessel and remove the locknut (see Fig. 27) then carefully lift the vessel out.

Reassemble in reverse order with a new vessel and washer.

8.4 TEMPERATURE AND PRESSURE RELIEF VALVE

Drain the cylinder as described in Section 8.2.

Loosen and remove the copper pipe from the valve and release the ¾" nut and remove the valve from the cylinder (see Fig. 27).

Reassemble in reverse order.

8.5 CYLINDER PUMP

Drain the cylinder as described in Section 8.2.

Undo the two pump unions (see Fig. 27) cut the plastic tie securing the pump and lift out the pump from the supporting bracket. Remove the two fixing screws and lift off the terminal block cover (see Fig. 27) and disconnect the pump lead from terminals 10 and 11 of the control unit. Release the cable clamp and withdraw the lead.

Reassemble in reverse order using new pump washers. Refer to the wiring diagram, Section 9 when connecting the pump lead and ensure it is secured by the cable clamp.

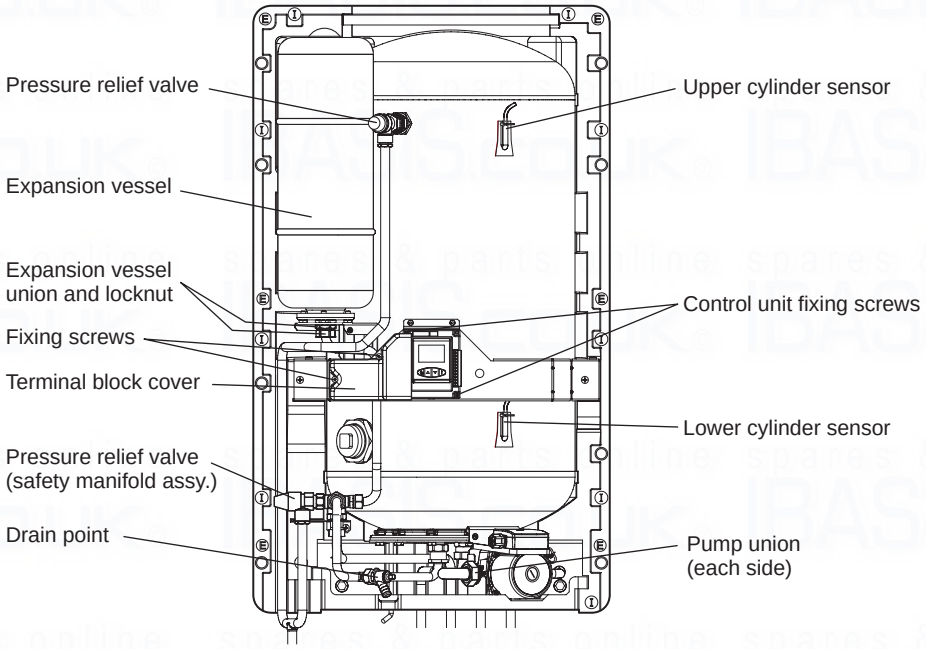

Fig. 27

8.6 CYLINDER TEMPERATURE SENSORS

Both sensors are the same.

Remove the cylinder case as described in Section 8.1.

Remove the split pin retaining the sensor in the pocket (see Fig. 27) and withdraw the sensor. Disconnect the sensor leads from the control unit.

Reassemble in reverse order, ensuring the sensor is retained with the split pin.

8.7 PRESSURE RELIEF VALVE

The pressure relief valve is supplied as an assembly - the inlet safety manifold assembly (see Fig. 27).

Loosen and remove the four fittings from the assembly. Lift out the assembly taking care not to lose the mains inlet mesh filter.

Reassemble in reverse order using new seals. Ensure the mesh filter is in position.

8.8 CONTROL UNIT

Remove the cylinder case as described in Section 8.1.

Remove the two fixing screws and lift off the terminal block cover (see Fig. 27). Remove all terminal connections from the control unit. Remove the two screws securing the control unit (see Fig. 27) and remove the unit.

Reassemble in reverse order.

8.9 DBU PUMP

Note: Care must be taken when carrying out repairs to the DBU as it reaches very high temperatures and can emit steam from connections when being removed.

Isolate the mains electric supply and remove the front case of the drain back unit by simply pulling it forwards.

Place a bucket under the drain plug at the bottom of the unit and using a suitable spanner, unscrew the plug while holding the plug housing with another spanner to prevent damaging the pipe. Expect about 8 litres.

Remove the two screws securing the pump retaining bracket (see Fig. 28) and remove the bracket.

Undo the two pump unions (see Fig. 28) and withdraw the pump.

Inside the main cylinder case - remove the two fixing screws and lift off the terminal block cover (see Fig. 27) and disconnect the pump leads from terminals 12, 13 and ⏚. Release the cable clamp and withdraw the lead. If the lead has been extended, disconnect it from the relevant junction box.

Reassemble in reverse order using new pump washers. Refer to Section 4.5, paragraph 3 if required when connecting the pump lead.

Refer to Section 5.2 to refill the drain back unit.

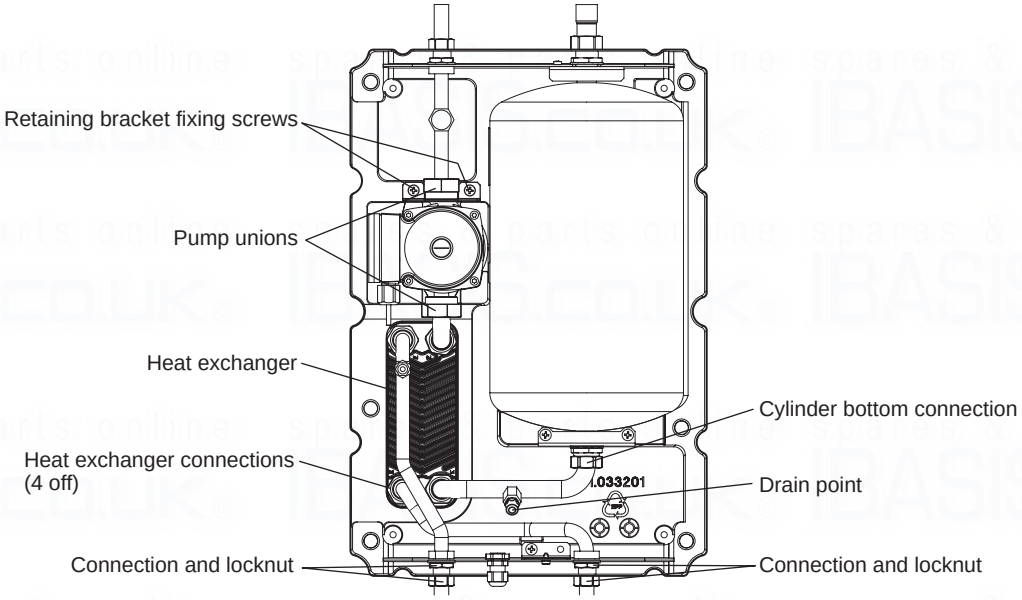

Fig. 28

8.10 COLLECTOR TEMPERATURE SENSOR

The collector sensor is fitted into a pocket on the same side of the collector as the pipe connections (see Fig. 7 and 8).

To replace the sensor the cover plate will need to be removed from the side of the collector by removing the four retaining screws. The old sensor can then be extracted from the pocket and the new one installed. Route the cable neatly through the roof either under a tile or through the pipe hole and connect to the terminal block inside the roof space where the original sensor was connected.

8.11 DBU HEAT EXCHANGER

Note: Care must be taken when carrying out repairs to the DBU as it reaches very high temperatures and can emit steam from connections when being removed.

Isolate the mains electric supply and remove the front case of the drain back unit by simply pulling it forwards.

Place a bucket under the drain plug at the bottom of the unit and using a suitable spanner, unscrew the plug while holding the plug housing with another spanner to prevent damaging the pipe. Expect about 8 litres.

Loosen the flow and return connections beneath the drain back unit and slacken the locknuts. Disconnect the flow and return pipes from the heat exchanger and remove them.

Remove the pipe from the heat exchanger to the pump. Loosen the pipe connection at the bottom of the cylinder then disconnect the other end of the pipe from the heat exchanger and remove.

Withdraw the heat exchanger.

Reassemble in reverse order using new sealing washers. The heat exchanger can be fitted either way up.

Refer to Section 5.2 to refill the drain back unit.

8.12 BOILER INLET SENSOR

Isolate the mains electric supply.

The boiler inlet sensor is located on the inlet pipe to the boiler (see Fig. 1). Disconnect the wires from the sensor and unclip it from the pipe.

Reassemble in reverse order. The polarity of the wires is not important.

9 WIRING DIAGRAM

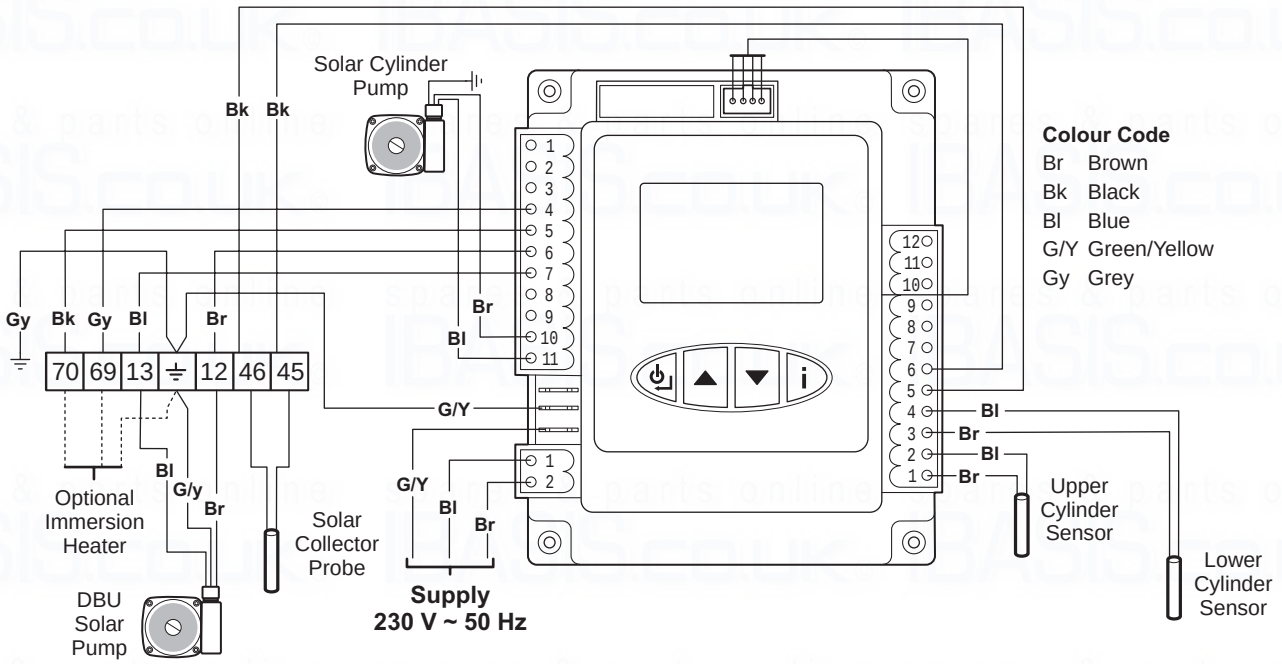

10 DIAGNOSTICS AND FAULT CODES

10.1 FAULT CODES

The solar system is fully controlled by the electronic control unit on the cylinder. Fault codes will be displayed on the display panel by means of a flashing fault code (71 to 80). See Fig. 23 and Section 5.4. The following codes can be displayed.

Codes 71, 72 and 80 will stop the solar system working: The cause must be rectified before the system will operate. When the cause has been rectified the system will start by itself.	
Code 71 Collector sensor fault	Temperature of the collector is below -20°C or above 250°C. Check the collector sensor: does it operate (check sensor resistance in table on next page). Sensor cable damaged or short circuited. Sensor is faulty.
Code 72 Lower cylinder sensor fault	Sensor reading out of range. Check the lower cylinder sensor: does it operate (check sensor resistance in table on next page). Sensor cable damaged or short circuited. Sensor is faulty.
Code 80 Upper cylinder sensor fault	Sensor reading out of range. Check the upper cylinder sensor: does it operate (check sensor resistance in Section 10.2). Sensor cable damaged or short circuited. Sensor is faulty.
Codes 74, 75 and 76 will lock the solar system: The cause must be rectified before the system will operate. When the cause has been rectified the system control can be reset by pressing the On/Off button for 3 seconds.	
Code 74 No circulation in the collector The collector and cylinder temperature differential remains greater than 40°C for more than 15 minutes	Check water level in drain back unit. Check the difference in height between the drain back unit pump and the top of the collector. This can be a maximum of 4 metres. Check that the pipework between the DBU and collector has the correct fall and length. Check the collector sensor and the lower cylinder sensor, do they operate (check sensor resistance in Section 10.3). Check the collector tubes, are they blocked with dirt? Is the decline of the pipes within the 40 mm per metre requirement. Check the electrical connection and operation of the drain back unit pump and the cylinder pump.
Code 75 Collector temperature too high The collector temperature remains greater than 120°C for more than 5 minutes	After 5 minutes the collector temperature is still too high (above 120°C) with the drain back unit pump and cylinder pump operating. Check the level of water in the drain back unit. Refer to filling procedure in Section 5.2. Check the difference in height between the drain back unit pump and the top of the collector. This can be a maximum of 4 metres. Check the collector sensor and the lower cylinder sensor, do they operate (check sensor resistance in Section 10.3). Check the collector tubes, are they blocked with dirt? Is the decline of the pipes within the 40 mm per metre requirement. Check the electrical connection and operation of the drain back unit pump and the cylinder pump.
Code 76 Cylinder overheat fault Cylinder temperature 85°C or greater	The built in overheat thermostat function has activated. Check cylinder pump function. Check immersion heater setting (if fitted). Check immersion heater thermostat is correctly set and switching off (approx. 60°C).

10.2 COLLECTOR and CYLINDER SENSOR - TEMPERATURE and RESISTANCE DATA

Collector Sensor Resistance Table

Temperature (°C)	Resistance (Ohm) +/- 20 Ohm
0	1000
20	1100
50	1200
80	1300
105	1400
130	1500
160	1600

Cylinder Sensor Resistance Table

Temperature (°C)	Resistance (Ohm) +/- 20 Ohm
25	10000
30	8500
65	2500
85	1500

11 PARTS LIST

Solar Cylinder Assembly

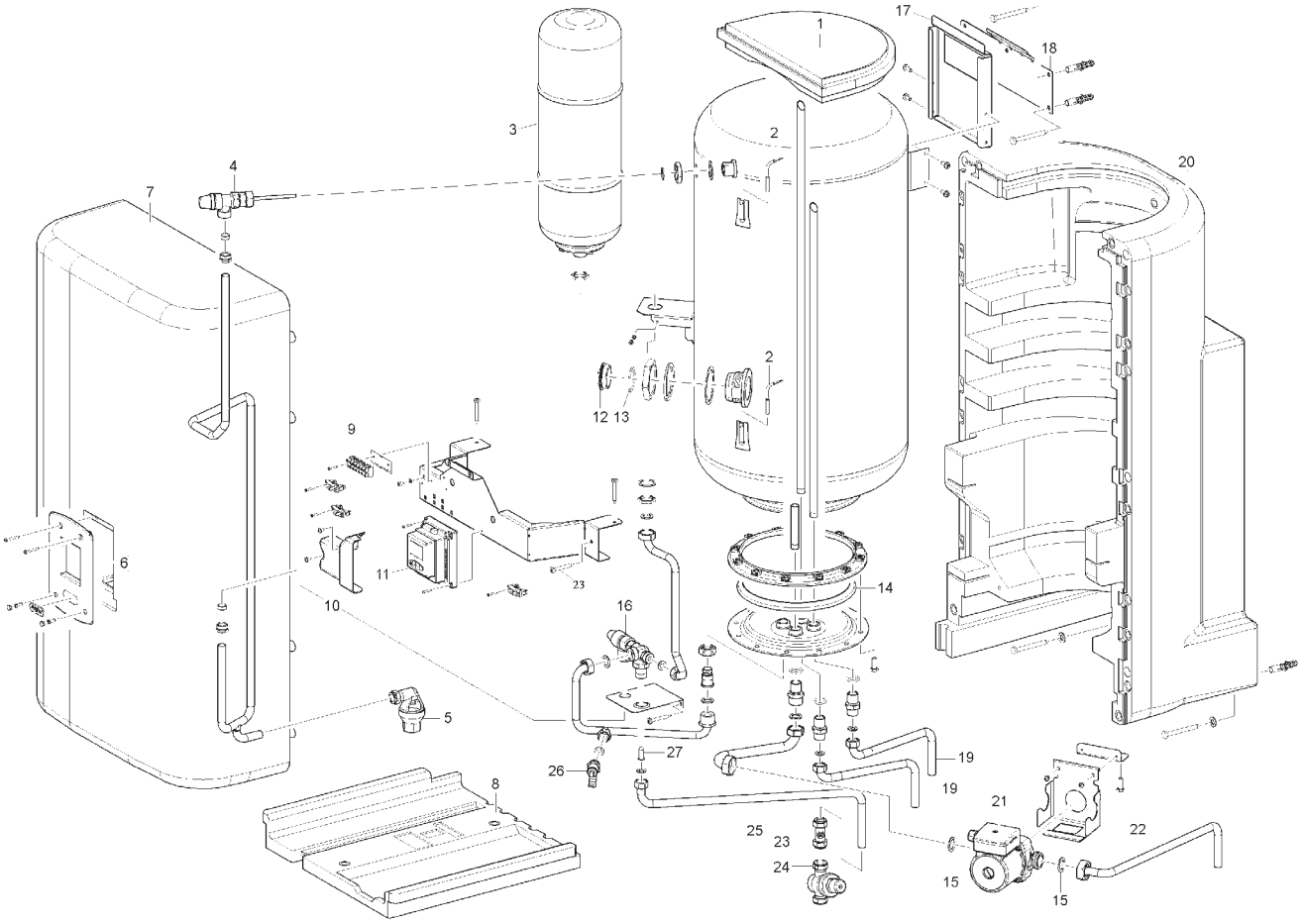

Ref.	Description	Qty.	Part No.	Ref.	Description	Qty.	Part No.
1	Top casing	1	1.033639	17	Hanging bracket	1	2.014984
2	Cylinder temperature sensor	1	1.016053	18	Wall bracket	1	2.014913
3	Expansion vessel (8 litres)	1	1.018955	19	Pipe - DBU return/hot outlet connection	2	1.033184
4	Temperature & Pressure valve	1	3.015843	20	Rear insulation casing	1	1.033208
5	Tundish	1	1.018148	21	Cylinder pump	1	1.032724
6	Control panel front frame	1	1.033210	22	Pipe - cylinder pump to DBU	1	1.033641
7	Front insulation casing	1	1.033207	23	Mains inlet isolation valve	1	1.033643
8	Bottom insulation cover	1	1.033209	24	Pressure reducing valve 2.5 bar	1	1.017936
9	7-way terminal block	1	1.028861	25	Mains inlet pipe	1	1.033606
10	Terminal block cover	1	1.033346	26	Drain valve	1	1.018062
11	Control unit - complete	1	1.033214	27	Inlet mesh filter	1	1.8403
12	Immersion plug	1	1.031393	-	Connection kit - 4 pipes/nuts/washers	1	3.023776
13	Immersion plug 'O' ring	1	1.026460	-	Wall fixing pack - plugs/screws	1	3.023777
14	Cylinder flange seal	1	1.7199	-	Seal kit - cylinder connections only	1	3.023778
15	Pump flange seal	2	1.019639	-	Seal kit - interconnecting pipework	1	3.0237791
16	Inlet safety manifold assembly	1	3.022662	-	Boiler inlet sensor	1	3.022467

Note: Washers and seals are not supplied with the replacement components and the relevant seals kit should also be used.

Drain Back Unit

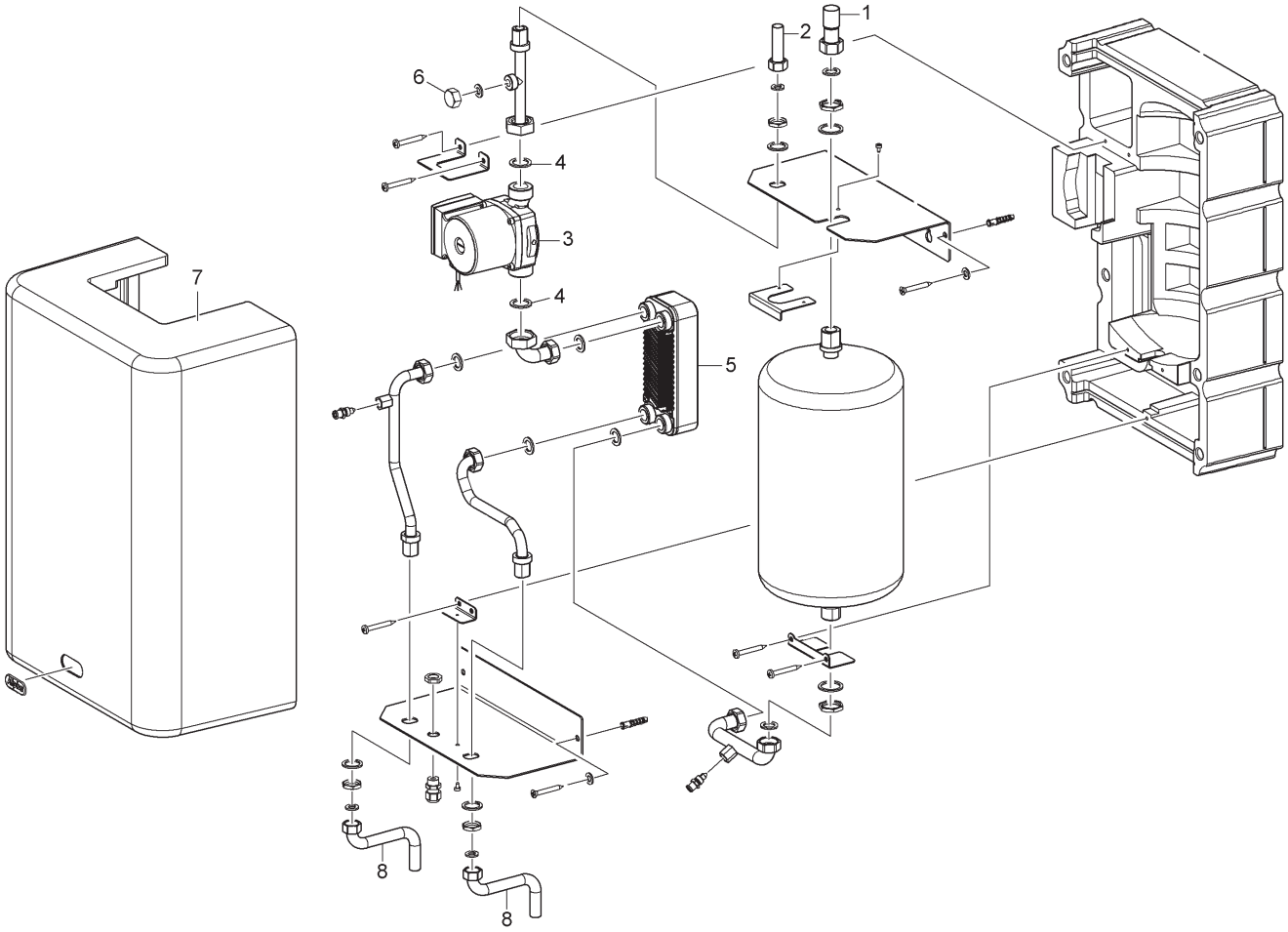

Ref.	Description	Qty.	Part No.
1	Top connection pipe - collector return (22 mm)	1	1.026759
2	Top connection pipe - collector flow (15 mm)	1	1.033644
3	Drain back circulation pump	1	1.033420
4	Pump flange seal	2	1.023511
5	Plate heat exchanger	1	1.032492
6	Vent plug	1	1.4275
7	Front insulation casing	1	1.033200
8	Bottom connection pipe	2	1.033180
-	Connection kit - top/bottom pipes/nuts/washers	1	3.023773
-	Complete seals kit - all DBU seals/washers	1	3.023774
-	Wall fixing pack - plugs/screws	1	3.023775
-	Collector sensor	1	1.033726
-	Collector sensor extension lead	1	1.033884

Note: Washers and seals are not supplied with the replacement components and the relevant seals kit should also be used.

SOLAR THERMAL COMMISSIONING CHECKLIST

This Commissioning Checklist is to be completed in full by the competent person who commissioned the Solar Thermal System and associated equipment as a means of demonstrating compliance with the appropriate Building Regulations and then handed to the customer to keep for future reference.

Failure to install and commission this equipment to the manufacturer's instructions may invalidate the warranty but does not affect statutory rights.

Customer Name | Telephone Number

Address

Commissioned by *(print name)*

Company Name | Telephone Number

Company Address

Commissioning Date

To be completed by the customer on receipt of a Building Regulations Compliance Certifcate.

Building Regulations Notifcation Number *(if applicable)*

Confrmation that required areas of the installation have been notifed to Local Authority Building Control (LABC)

a). Initials of commissioning engineer

b). Competent Persons Scheme (CPS) details or details of LABC direct notiifcation

Confrmation that panels have been installed without lessening the structure, weathering and fire resistance of the roof in accordance with the relevant Building Regulations and standards. Initials of commissioning engineer

COLLECTOR DETAILS

Make of collector | Model of collector

Serial number of each collector: *(if more than 6 collectors please append additional sheet)*

i. | ii. | iii.

Iv. | v. | vi.

INSTALLATION DETAILS

Solar System Operating Pressure ☐ bar (cold) | Expansion vessel air/nitrogen charge ☐ bar (cold)

Expansion or drain back vessel size ☐ litres

Operating correctly: Yes ☐ | Treated for leaks and fushed: Yes ☐ | Filled and purged for air: Yes ☐

System heat transfer fluid details:

What type/make of heat transfer fluid used? | System volume ☐ litres

What is the fluid mix: Water ☐ % | Glycol ☐ %

Frost protection provided to ☐ °C

Is the installation in a hard water area (above 200ppm)? Yes ☐ No ☐

If yes, has a water scale reducer been fitted or has Tmax been limited to 60˚C? Yes ☐ No ☐

What type of scale reducer has been ftted?

Air purged from solar primary circuit: Yes ☐ | Primary circuit valves and air vent(s) set to final operating positions: Yes ☐

Pump speed setting recorded: Speed setting | Max fow rate ☐ litres/min

Solar primary circuit pressure relief valves tested for correct operation: Yes ☐ | Location

Device for limiting hot water temperature outlets has been fitted: Yes ☐ No ☐

Type | Location

All exposed pipework lagged in accordance with regulations using suitably temperature rated materials Yes ☐

For unvented hot water storage cylinder, will controls stop solar fluid circulation in the event of cylinder overheating? Yes ☐

SOLAR SYSTEM CONTROLS

Make and model of DTC

Temperature sensors checked and operating correctly Yes ☐

Differential Temperature Controller (DTC) settings: T on ☐ °C | T off ☐ °C | T max ☐ °C | Other DTC Settings

Thermostat located in back-up heating zone of cylinder Yes ☐ No ☐

Have optimum settings for HW controls been explained to the customer? Yes ☐ No ☐

Does this include Legionella Bacteria protection settings with back up heating system to bring boiler volume to 60°C for an hour once a day? Yes ☐ No ☐

Electrical installation is accordance with BS7671 Yes ☐

Location of electrical isolation switch to solar control/pump unit

ALL INSTALLATIONS

The heating and hot water system complies with the appropriate Building Regulations Yes ☐

The system and associated products have been installed and commissioned in accordance with the manufacturer's instructions Yes ☐

The effcient operation of system and its controls have been demonstrated to and understood by the customer Yes ☐

The manufacturer's literature, including Benchmark Checklist and Service Record, has been explained and left with the customer Yes ☐

Commissioning Engineer's Signature

Customer's Signature

(To confrm satisfactory demonstration and receipt of manufacturer's literature)

* All installations in England and Wales must be notified to Local Authority Building Control (LABC) either directly or through a Competent Persons Scheme. A Building Regulations Compliance Certifcate will then be issued to the customer.

benchmark COLLECTIVE MARK
THE MARK OF QUALITY FOR THE INSTALLATION, COMMISSIONING AND SERVICING OF DOMESTIC HEATING AND HOT WATER SYSTEMS

© Heating and Hotwater Industry Council (HHIC)

Service Record

It is recommended that your heating system is serviced regularly and that the appropriate Service Record is completed.

Service Provider

Before completing the appropriate Service Record below, please ensure you have carried out the service as described in the manufacturer's instructions.

Always use the manufacturer's specified spare part when replacing controls.

Service 1 Date

Energy Efficiency Checklist completed? YES ☐ NO ☐

Engineer Name

Company Name

Telephone Number

Comments

Signature

Service 2 Date

Energy Efficiency Checklist completed? YES ☐ NO ☐

Engineer Name

Company Name

Telephone Number

Comments

Signature

Service 3 Date

Energy Efficiency Checklist completed? YES ☐ NO ☐

Engineer Name

Company Name

Telephone Number

Comments

Signature

Service 4 Date

Energy Efficiency Checklist completed? YES ☐ NO ☐

Engineer Name

Company Name

Telephone Number

Comments

Signature

Service 5 Date

Energy Efficiency Checklist completed? YES ☐ NO ☐

Engineer Name

Company Name

Telephone Number

Comments

Signature

Service 6 Date

Energy Efficiency Checklist completed? YES ☐ NO ☐

Engineer Name

Company Name

Telephone Number

Comments

Signature

Service 7 Date

Energy Efficiency Checklist completed? YES ☐ NO ☐

Engineer Name

Company Name

Telephone Number

Comments

Signature

Service 8 Date

Energy Efficiency Checklist completed? YES ☐ NO ☐

Engineer Name

Company Name

Telephone Number

Comments

Signature

Service 9 Date

Energy Efficiency Checklist completed? YES ☐ NO ☐

Engineer Name

Company Name

Telephone Number

Comments

Signature

Service 10 Date

Energy Efficiency Checklist completed? YES ☐ NO ☐

Engineer Name

Company Name

Telephone Number

Comments

Signature

Warranty terms and conditions

How to validate the warranty period

The appliance must be registered with Alpha Heating Innovation within 30 days of installation. This can be done by completing the registration form on our website: www.alpha-innovation.co.uk or completing the form included with your boiler and sending it to Alpha Heating Innovation, Nepicar House, London Road, Wrotham Heath, Kent TN15 7RS.

Your appliance is then guaranteed against faulty materials or workmanship from the date of installation (not the date of first use) subject to the conditions and exceptions described below.

Our promise to you

If you experience a fault with your SolarSmart system, we aim to provide a safe and high quality repair service, supported by our dedicated national network of highly skilled engineers.

During the warranty period, any components which are proved to be faulty or defective in manufacture will be exchanged or repaired free of charge, if repaired directly by Alpha Heating Innovation or one of its appointed agents.

Invoices for attendance and repair of the appliance by third parties will not be accepted by Alpha Heating Innovation.

This guarantee does not affect your statutory rights.

The warranty is valid provided that:

- The system is fed from the public mains water supply.
- The cylinder has only been used for the storage of potable water.
- The system has not been subjected to frost damage, scaling, nor has it been tampered with or been subjected to misuse or neglect.
- The system has been serviced annually.
- The Benchmark Log Book has been filled in after each annual service.
- The system has been correctly installed by a qualified and competent installer and as per the instructions contained in the Product Guide and all relevant Codes of Practice and Regulations in force at the time of installation.
- Any disinfection has been carried out in accordance with BS 6700.
- The appliances have not been modified in any way other than by Alpha Heating Innovation or Alpha Heating Innovation approved engineers.
- No factory-fitted parts have been removed for unauthorised repair or replacement.
- It has been installed in the UK. This guarantee is not valid for installations outside the United Kingdom.

What this warranty does not cover

- Free of charge repairs to appliances that have not been installed by a qualified and competent person.
- Repairs to appliances that have not been installed and commissioned correctly, as outlined in the installation instructions.
- Any damage caused by defects or failures in the system, outside of the appliance itself.
- The effects of scale build up.
- Faults caused by an inadequate supply of electricity or water to the property.
- The replacement of any decorative parts such as badges, trim and case.
- Compensation for consequential losses (e.g. loss of earnings, business losses, stress and inconvenience arising from a production breakdown, including repair delays caused by factors outside our reasonable control.

What to do if you experience a problem with your heating system or the operation of your Alpha appliance

- You should always contact your installer in the first instance.
- If your installer confirms that the fault is with your Alpha appliance and they cannot repair it because of a component failure, our customer service technical helpline is on hand to help. Simply call 0844 871 8764 for advice or to book an engineer's visit.
- Our technical helpline is open 08.00 – 17.30 Monday to Friday, 09.00 – 16.00 on Saturday and 09.00 – 14.00 on Bank Holidays (excluding Christmas Day).

PLEASE NOTE

If you cannot provide details of your installer, who must be a qualified and competent person, and we have not been notified of this information previously, a "call-out" charge of £50+VAT will be levied before we agree to attend site.

This fee must be paid by debit or credit card over the telephone prior to us agreeing to send an engineer to attend to the appliance. If evidence that the appliance has been installed by a legally registered engineer can be presented when our service engineer visits site then any fee will be reimbursed.

'Evidence' is strictly defined as any of the following:

1. A copy of a Building Regulations Compliance certificate (giving the details of the registered installer who carried out the work), or
2. A copy of a receipt for the installation clearly showing the installation company's address details and their current Gas Safe registration number.

Alpha Heating Innovation is a trading name of Alpha Therm Ltd., Nepicar House, London Road, Wrotham Heath, Kent TN15 7RS. Registered in England no. 882439.

5 ELECTRICAL SUPPLY

The SolarSmart requires a 230/240 V ~ 50 Hz supply, fused at 3 A if a 13 A 3-pin plug is used or a 5 A fuse if any other type of plug is used.

To connect a plug:-

The colour of the wires in the mains lead may not correspond with the coloured markings identifying the terminals in your plug. In this case proceed as follows:-

The wire coloured green and yellow must be connected to the terminal in the plug that is marked with the letter **E**, or by the earth symbol ⏚, or coloured green or green and yellow.

The blue wire must be connected to the terminal which is marked with either the letter **N** or coloured black.

The brown wire must be connected to the terminal which is marked with the letter **L** or coloured red.

5 IMPORTANT NOTES

THE APPLIANCE MUST BE EARTHED.

Proviso: WRAS Approval - Solar heating system components. Compliance with the relevant requirements of the Water Supply (Water Fittings) Regulations 1999 has been assessed for this product only as a component of a heating system. If it is to be installed as part of a system using solar energy or ground - or air - source heat pumps for pre-heating water which is to be used as domestic hot water, the Water Fittings Regulations place a legal duty on the installer and user to ensure that the installation and operation of the complete system prevents contamination of domestic hot water by Legionella bacteria, which can grow in water stored at temperatures between 20° and 45°C. Where disinfection by heating is relied on to meet this obligation, information on minimum conditions for thermal disinfection of Legionella bacteria can be found on the WRAS website - www.wras.co.uk

1. **Location -** Always ensure the following clearances are available around the units for servicing:-

   Cylinder - Top: 100 mm, Bottom: 300 mm, Sides: 10 mm, Front: 450 mm.

   Drain Back Unit - Top: 100 mm, Bottom: 100 mm, Sides : 10 mm, Front: 450 mm.

2. **Mains Failure -** In the event of an electrical supply failure the system will not operate. When the supply is restored, the system will return to normal operation. If the mains water supply fails, there will be no hot water from the taps.

3. **Pressure Relief Valves -** If the hot water system overheats and steam or water is discharged from the pipe connected to the tundish, turn the Solar system off and contact your Installer. Your Installer should have told you where these pipes terminate.

4. **Hot Water -** To prevent very high temperatures at the hot water taps, the Installer should have fitted a thermostatically controlled mixing valve after the combination boiler.

5. **Hot Piping -** The temperatures of pipework from the collector panel, drain back unit and solar cylinder can be very high. Therefore all Solar system pipework should have been insulated to not only reduce heat loss, but more importantly to prevent injury from burns. Ensure your Installer has done this!

6. **Frost -** Always ensure the room/area where the various parts of the solar system have been installed are protected from frost.

7. **Holidays -** The SolarSmart system uses a very small amount of energy for its operation and during normal vacations (1-2 weeks) we recommend that the system is left switched ON.

   If hot water is not used for an extended period of time or the property is vacant then we recommend the system is switched off and the cylinder is drained at the drain point provided. Further details of this procedure can be found in the Installation and Servicing Instructions alternatively contact your installer or engineer.

8. **Servicing -** To maintain efficient and safe operation of the SolarSmart system, it is recommended regular inspection and checks are carried out.

9. **Electric Immersion Heater -** The facility to fit an electric immersion heater is available which can be used to provide additional heat to the cylinder contents if required.

If you contact the Alpha Helpline (Tel: 0844 871 8764) for advice, you will be asked for the serial number of your solar cylinder. The serial number of the cylinder is located on lefthand side of the case and on the bottom.

The boiler domestic hot water thermostat **must** always be set to the maximum setting. A label has been supplied which should have been positioned adjacent to the domestic hot water thermostat knob, as shown in Fig. 2, to ensure the maximum setting is maintained.

Fig. 2

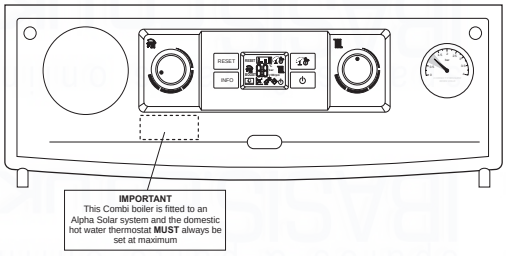

3 POSITIONING OF THE COLLECTOR

The solar energy supplied by a system varies with the orientation and tilt of the collector, which will usually be determined by the existing roof. However, the predicted variation is slight. For a collector facing anywhere between SE and SW and tilted between 15° and 75° from the horizontal, the annual solar energy supplied will be at least 90% of that obtained at the optimum collector position (South at 30°).

It should be remembered that shading from trees, buildings etc., can produce a significant decrease in system performance, and collectors should be positioned to minimise shading from the sun.

4 SYSTEM OPERATION

WORKING PRINCIPAL - Fig. 3

The solar collector uses the energy of the natural light to heat the water being circulated around the collector. When the heated water enters the drain back unit, heat is transfer into the stored water via a heat exchanger. Stored domestic hot water is pumped from the bottom of the solar cylinder through the drain back unit heat exchanger where it is heated and returned to the cylinder.

When a hot water tap is turned on mains water flows into the bottom of the solar cylinder and hot water flows out of the top towards the boiler. If the boiler inlet sensor detects that the water from the cylinder is above 60°C the water flows directly through the boiler to the tap, if the temperature is less than 60°C the boiler heats up the water. When the flow is less than 60°C the water temperature is maintained by the boiler.

As the temperature of the water entering the boiler is higher than the normal incoming mains water, less gas is required to heat the water to the set temperature of above 60°C thereby saving energy costs.

Fig. 3

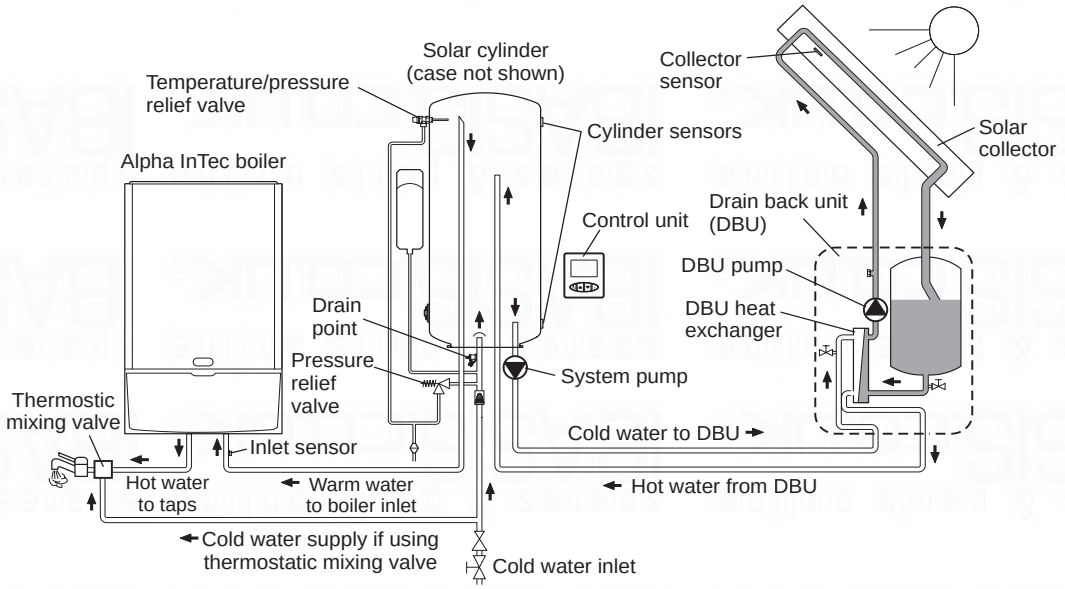

OPERATION OF THE SOLARSMART SYSTEM - Fig. 3

When the controls detect a collector sensor temperature that is at least 10°C higher than the lower cylinder sensor and the solar cylinder temperature is less than 65°C, the drain back unit pump will start to circulate water around the collector. At the same time that the drain back unit pump starts the cylinder pump will start at 16% full speed to circulate the cylinder water through the drain back unit heat exchanger. The drain back unit pump will stop when the temperature difference between the collector sensor and the lower cylinder sensor falls to 3.5°C or the cylinder temperature reaches 70°C. The cylinder pump will continue to run for 120 seconds to collect any excess heat from the drain back unit then it will also stop.

When the pumps are operating, a flashing pump symbol will be visible in the display (Fig. 1). If a fault occurs, a fault code will be visible in the display.

1 DESCRIPTION

The Alpha SolarSmart system is a pre heated drain back solar collector system which includes an unvented 103 litre cylinder to store the water heated by the solar collector. It is recommended that the system is used in conjunction with an Alpha combination boiler fitted with the Alpha solar inlet sensor which is supplied with the system.

The SolarSmart system consists of an unvented cylinder, one or two flat plate solar collectors and a drain back unit. The cylinder is fitted with a pump and temperature sensors – a control unit with display is fitted within the cylinder casing. The drain back unit is fitted with a heat exchanger and pump.

A pressure reducing valve and isolation valve is supplied which must be fitted in the mains water supply to the cylinder.

2 USER CONTROLS

The Solar cylinder is fitted with a control unit with integrated display panel and push button controls. The display indicates the working modes of the system with symbols to indicate the working components of the complete system.

Fig. 1

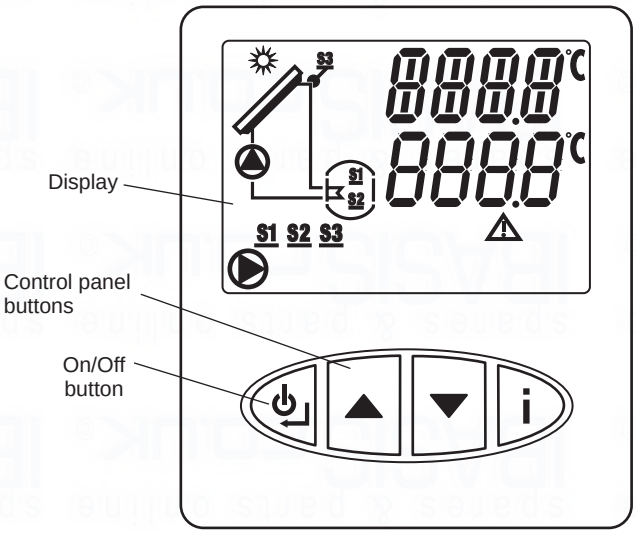

Button	Description	Function
	On/Off	Switches the system on and off
	Increase	Not used in this instance
	Decrease	Not used in this instance
	Info	Sensor temperature info: Keep it pressed in for 1 sec. displays sensor S2 and S3, press in once more to display sensors S1 and S3 (S3 is always the upper temperature on the display)

Symbol	Description	Function	
		State	Decription
	DBU pump	On Flashing	DBU pump in standby state DBU pump operational
	Cylinder pump	On Flashing	Cylinder pump in standby state Cylinder pump operational
	Warning	Flashing	Fault code will be displayed
	Sun	Flashing	Solar system operational
	Degrees celsius	On	Unit of temperature
	Digits	On	Display temperature, parameters values and fault codes
S1 S2 S3	Temperature sensors	On	Active sensors
	Solar cylinder	On	Cylinder state correct
	Solar collector	On	Solar collector correct

User's Instructions

Also includes Installation and Servicing instructions at back

Alpha SolarSmart 100

Pre-Heat Drain Back Solar System and Wall Mounted Unvented Hot Water Solar Cylinder for use with an Alpha Combination Boiler

For Technical help or for Service call ...
ALPHA HELPLINE Tel: 0844 871 8764
email: info@alpha-innovation.co.uk
website: www.alpha-innovation.co.uk

Alpha
HEATING INNOVATION

Alpha Therm Limited
Nepicar House, London Road,
Wrotham Heath, Sevenoaks,
Kent TN15 7RS

SOLAR Key Mark Certificated

Leave these instructions with the User

These instructions have been carefully prepared but we reserve the right to alter the specification at any time in the interest of product improvement.
© Alpha Therm Limited 2012.

Part No. 1.032744 Rev 15.037926/000
1212/D321