# ACO SERIES

## Installation and Servicing Instructions Type C Boilers

**ACO 27 MFFI G.C.N: 47-116-34**
**ACO 32 MFFI G.C.N: 47-116-35**
**ACO 27 RFFI G.C.N: 41-116-09**
**ACO 32 RFFI G.C.N: 41-116-10**

**LEAVE THESE INSTRUCTIONS WITH THE END USER**

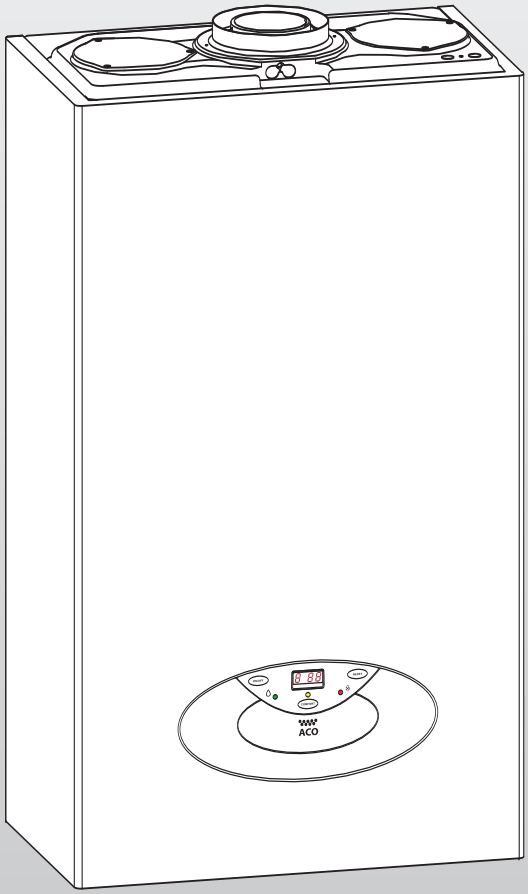


ARISTON

2000022299983182921220400000000

Country of destination: GB/IE

CE

WRAS APPROVED PRODUCT

benchmark
The code of practice for the installation, commissioning & servicing of central heating systems

spares & parts online IBASIS.CO.UK

# TABLE OF CONTENTS


| | | PAGE |
|---|---|---|
| **1.** | **GENERAL INFORMATION** | |
| 1.1. | General Information | 3 |
| 1.2. | Technical Information | 4 |
| 1.3. | Overall View | 6 |
| **2.** | **INSTALLATION** | |
| 2.1. | Reference Standards | 7 |
| 2.2. | Siting the Appliance | 7 |
| 2.3. | Overall Dimensions | 8 |
| 2.4. | Minimum Clearances | 8 |
| 2.5. | Mounting the Appliance | 9 |
| 2.6. | Electrical Connection | 9 |
| 2.7. | Gas Connection | 9 |
| 2.8. | Water Connections | 10 |
| 2.9. | Flue Connections | 13 |
| 2.9.1 | Fitting the Coaxial Flue (Ø 60 / 100 Horizontal) | 14 |
| 2.9.2 | Fitting the 5" Flue (Ø 80 / 125 Horizontal/Vertical) | 15 |
| 2.9.3 | Fitting the coaxial flue (Ø 60 / 100 Vertical) | 16 |
| 2.9.4 | Fitting the twin pipe (Ø80 / 80) | 17 |
| 2.10. | Fitting the Mechanical/Digital Time Clock | 20 |
| 2.11. | Setting the Mechanical Time Clock | 22 |
| 2.11.1. | Setting the Digital Time Clock | 22 |
| 2.12. | Accessory Connection | 24 |
| 2.13. | Electrical diagram | 26 |
| 2.14. | Water Circuit diagram | 28 |
| **3.** | **COMMISSIONING** | |
| 3.1. | Initial Preparation | 30 |
| 3.2. | Removing the Casing | 32 |
| 3.3. | Control Panel | 33 |
| 3.4. | Initial Start-up | 35 |
| 3.5. | Display: Messages Shown During Normal Operation | 36 |
| 3.6. | Operating Parameters | 37 |
| 3.6.1. | Regulation Menu Table | 37 |
| 3.6.2. | Settings Display | 43 |
| 3.6.3. | Gas Regulation Check | 44 |
| 3.6.4. | Ignition Delay Adjustment | 45 |
| 3.6.5. | Adjusting the Maximum Heating Power | 45 |
| 3.6.6. | Soft Light Adjustment | 45 |
| 3.7. | Changing the Type of Gas | 45 |
| 3.8. | Adjusting the Domestic Hot Water Flow Rate | 45 |
| 3.9. | Balancing the Central Heating System | 45 |
| 3.10. | Boiler Safety Systems | 46 |
| 3.11. | Completion | 47 |
| 3.12. | Draining | 47 |
| **4.** | **ZONE VALVES** | **48** |
| **5.** | **SEQUENCE OF OPERATION** | **51** |
| 5.1 | Central Heating Mode | 51 |
| 5.2 | Domestic Hot Water Mode | 51 |
| **6.** | **MAINTENANCE** | **52** |
| 6.1. | General Remarks | 52 |
| 6.2. | Cleaning the Primary Exchanger | 52 |
| 6.3. | Cleaning the Condensate Trap | 52 |
| 6.4. | Operational Test | 52 |
| **7.** | **SERVICING INSTRUCTIONS** | **53** |
| 7.1. | Replacement of Parts | 53 |
| 7.2. | To Gain General Access | 53 |
| 7.3. | Access to the Combustion Chamber | 54 |
| 7.3.1. | Removing the Fan | 54 |
| 7.3.2. | Removing the Air Pressure Switch | 55 |
| 7.3.3. | Removing the Burner | 55 |
| 7.3.4. | Removing the Electrodes | 56 |
| 7.3.5. | Removing the Heat Exchanger | 56 |
| 7.3.6. | Removing the Condensate Trap (tube) | 58 |
| 7.3.7. | Removing the Condensate Trap | 58 |
| 7.4. | Access to the Gas Valve | 59 |
| 7.4.1. | Removing the Gas Valve | 59 |
| 7.4.2. | Removing the Spark Generator | 60 |
| 7.5. | Access to the Water Circuit | 60 |
| 7.5.1. | Removing the D.H.W. (Secondary) Exchanger | 60 |
| 7.5.2. | Removing the Safety Valve | 61 |
| 7.5.3. | Removing the Automatic Air Vent | 61 |
| 7.5.4. | Removing the Diverter Valve Actuator | 62 |
| 7.5.5. | Removing the DHW Flow Switch (MFFI only) | 62 |
| 7.5.6. | Removing the Pump | 62 |
| 7.5.7. | Removing the Pressure Gauge | 63 |
| 7.5.8. | Removing the Expansion Vessel | 64 |
| 7.5.9. | Removing the D.H.W. Temperature Probe (N.T.C. - MFFI only) | 64 |
| 7.5.10. | Removing the C.H. Flow Temperature Probe (N.T.C.) | 65 |
| 7.5.11. | Removing the C.H. Return Temperature Probe (N.T.C.) | 65 |
| 7.6. | Access to the Control System | 66 |
| 7.6.1. | Checking the Fuses | 66 |
| 7.6.2. | Removing the Printed Circuit Boards | 66 |
| 7.6.3. | Removing the Time Clock | 67 |
| **8.** | **FAULT FINDING** | **68** |
| 8.1 | Fault Finding Guide (Flow-Charts) | 68 |
| **9.** | **SHORT SPARES PARTS LIST** | **72** |
| **10.** | **ANNUAL MAINTENANCE CHECKLIST** | **76** |
| **11.** | **BENCHMARK COMMISSIONING CHECKLIST** | **78** |
| **12.** | **SERVICE INTERVAL RECORD** | **79** |

# 1. GENERAL INFORMATION

This manual is an integral and essential part of the product. It should be kept with the appliance so that it can be consulted by the user and our authorised personnel.

Please carefully read the instructions and notices about the unit contained in this manual, as they provide important information regarding the safe installation, use and maintenance of the product.

For operating instructions please consult the separate Users Manual.

## 1.1. GENERAL INFORMATION

Read the instructions and recommendations in these Installation and Servicing Instructions carefully to ensure proper installation, use and maintenance of the appliance.

Keep this manual in a safe place. You may need it for your own reference while Servicing Technicians or your installer may need to consult it in the future.

The ACO MFFI range is a combined appliance for the production of central heating (C.H.) and domestic hot water (D.H.W.).

The ACO RFFI range is an appliance for the production of Central Heating (C.H.) and is designed for use with an indirect cylinder for Domestic Hot Water (D.H.W.)

The ACO MFFI and RFFI range of boilers are domestic gas boilers and intended for domestic use only.

This appliance **must be used only** for the purpose for which it is designed.

The manufacturer declines all liability for damage caused by improper or negligent use.

No asbestos or other hazardous materials have been used in the fabrication of this product.

MTS recommends the use of protective clothing when installing and working on the appliance i.e. gloves.

**Before connecting** the appliance, check that the information shown on the data plate and the table in Section 1.2 (page 4) comply with the electric, water and gas mains of the property. You will find the data plate on the reverse of the control panel.
The gas with which this appliance operates is also shown on the label at the bottom of the boiler.

**Do not** install this appliance in a damp environment or close to equipment which spray water or other liquids.
**Do not place** objects on the appliance.
**Do not allow** children or inexperienced persons to use the appliance without supervision.

If you smell gas in the room, **do not turn on or off** light switches, use the telephone or any other object which might cause sparks.
Open doors and windows immediately to ventilate the room.
Shut the gas mains tap (at or adjacent to the gas meter) or the valve of the gas cylinder and call your Gas Supplier immediately.

**Always disconnect** the appliance either by unplugging it from the mains or turning off the mains switch before cleaning the appliance or carrying out maintenance.

**In the case of faults or failure**, switch off the appliance and turn off the gas tap. Do not tamper with the appliance.
For repairs, call your local Authorised Servicing Agent and request the use of original spare parts. For in-guarantee repairs contact MTS (GB) Limited.

## 1.2. Technical Information

| | Name | | ACO 27 MFFI (COMBI) | ACO 27 RFFI (SYSTEM) |
|---|---|---|---|---|
| General Info | CE Certification | | 0085BP0229 | 0085BP0229 |
| | Flue Type | | $C_{13}$-$C_{33}$-$C_{43}$-$C_{53}$-$C_{83}$-$B_{23}$-$B_{33}$ | $C_{13}$-$C_{33}$-$C_{43}$-$C_{53}$-$C_{83}$-$B_{23}$-$B_{33}$ |
| Energy Performance | Heat Input max (Domestic Hot Water) | kW | 30.0 | ---------- |
| | Heat Input max/min (Central Heating) | kW | 25.5 / 8.9 | 25.5 / 8.9 |
| | Heat Output max (Domestic Hot Water) | kW | 27.0 | ---------- |
| | Heat Output max/min (Central Heating) | kW | 22.5 / 7.7 | 22.5 / 7.7 |
| | Efficiency of Nominal Heat Input (60/80°C) | % | 88.2 | 88.2 |
| | Efficiency of Nominal Heat Input (30/50°C) | % | 91.8 | 91.8 |
| | Efficiency at 30% of Nominal Heat Input (47°C) | % | 92.9 | 92.9 |
| | Efficiency at 30% of Nominal Heat Input (30°C) | % | 96.8 | 96.8 |
| | Efficiency at Minimum Input | % | 86.7 | 86.7 |
| | Efficiency (Dir. 92/42/EEC)** | | ☆☆☆☆ | ☆☆☆☆ |
| | SEDBUK Rating | Band / % | A / 90.4 | A / 90.5 |
| | Heat Loss to the Casing (DT=50°C) | % | 0.5 | 0.5 |
| | Flue Heat Loss with Burner Operating | % | 2.6 | 2.6 |
| Emissions | Max Discharge of Products of Combustion (G20) | Kg/h | 35.3 | 35.3 |
| | Temp. of exhaust fumes at nominal capacity | °C | 72 | 72 |
| | $CO_2$ Content | % | 9.1 | 9.1 |
| | $O_2$ Content | % | 4.3 | 4.3 |
| | CO Content | ppm | 109 | 109 |
| | Nox Class | | 5 (70 mg/kW/h) | 5 (70 mg/kW/h) |
| Central Heating | Head Loss on Water Side (max) (DT=20°C) | mbar | 200 | 200 |
| | Residual Head of System | bar | 0.2 | 0.2 |
| | Expansion Vessel Pre-load Pressure | bar | 0.7 | 0.7 |
| | Maximum Heating Pressure | bar | 3 | 3 |
| | Expansion Vessel Capacity | l | 7 | 7 |
| | Maximum Water Content of System | l | 130 | 130 |
| | Heating Temperature max/min (High temperature) | °C | 82 / 46 | 82 / 46 |
| | Heating Temperature max/min (Low Temperature) | °C | 75 / 20 | 75 / 20 |
| Domestic Hot Water | Domestic Hot Water Temperature (approx) max/min | °C | 56 / 36 | |
| | Specific Flow Rate (10 minutes/DT 30°C) | l/min | 12.6 | |
| | D.H.W. Flow Rate DT=25°C | l/min | 15.2 | |
| | D.H.W. Flow Rate DT=35°C | l/min | 10.8 | |
| | D.H.W. Minimum Flow Rate | l/min | 2.5 | |
| | Pressure of Domestic Hot Water max/min | bar | 6 / 0.2 | |
| | Max. Condensate produced | l/h | 1.5 | 1.5 |
| | PH of condensate | W | 4 | 4 |
| Gas | Nominal Pressure Natural Gas (G20) | mbar | 20 | 20 |
| | Consumption at Nominal Capacity(G20) | $m^3/h$ | 2.43 | 2.43 |
| | Gas Consumption after 10 Minutes* | $m^3$ | 0.85 | 0.85 |
| Electrical Data | Electrical Supply | V/Hz | 230/50 | 230/50 |
| | Power Consumption | W | 118 | 118 |
| | Minimum Ambient Temperature | °C | +5 | +5 |
| | Protection Grade of Electrical System | IP | 24D | 24D |
| | Internal Fuse Rating | | 2A Fast Fuse | 2A Fast Fuse |
| | Weight | Kg | 41 | 40 |
| | Casing Dimensions (D/W/H) | mm | 280/450/750 | 280/450/750 |
| | **G.C. Number** | | **47-116-34** | **41-116-09** |

* Calculated at 70% maximum output
** Calculated on Upper calorific value

| | | | | |
|---|---|---|---|---|
| General Info | ***Name*** | | **ACO 32 MFFI (COMBI)** | **ACO 32 RFFI (SYSTEM)** |
| | ***CE Certification*** | | 0085BP0229 | 0085BP0229 |
| | ***Flue Type*** | | $C_{13}$-$C_{33}$-$C_{43}$-$C_{53}$-$C_{83}$-$B_{23}$-$B_{33}$ | $C_{13}$-$C_{33}$-$C_{43}$-$C_{53}$-$C_{83}$-$B_{23}$-$B_{33}$ |
| Energy Performance | Heat Input max (Domestic Hot Water) | kW | 32.0 | ---------- |
| | Heat Input max/min (Central Heating) | kW | 31.6 /10.5 | 31.6 /10.5 |
| | Heat Output max (Domestic Hot Water) | kW | 32.0 | ---------- |
| | Heat Output max/min (Central Heating) | kW | 28 / 9.5 | 28 / 9.5 |
| | Efficiency of Nominal Heat Input (60/80°C) | % | 88.5 | 88.5 |
| | Efficiency of Nominal Heat Input (30/50°C) | % | 88.7 | 88.7 |
| | Efficiency at 30% of Nominal Heat Input (47°C) | % | 91.2 | 91.2 |
| | Efficiency at 30% of Nominal Heat Input (30°C) | % | 97.1 | 97.1 |
| | Efficiency at Minimum Input | % | 89.7 | 89.7 |
| | Efficiency (Dir. 92/42/EEC)** | | ☆☆☆☆ | ☆☆☆☆ |
| | SEDBUK Rating | Band / % | A / 90.4 | A / 90.5 |
| | Heat Loss to the Casing (DT=50°C) | % | 1 | 1 |
| | Flue Heat Loss with Burner Operating | % | 2.7 | 2.7 |
| Emissions | Max Discharge of Products of Combustion (G20) | Kg/h | 45.7 | 45.7 |
| | Residual Discharge Head | mbar | 1 | 1 |
| | Temp. of exhaust fumes at nominal capacity | °C | 76.4 | 76.4 |
| | $CO_2$ Content | % | 8.7 | 8.7 |
| | $O_2$ Content | % | 5 | 5 |
| | CO Content | ppm | 71 | 71 |
| | Nox Class | | 5 (70 mg/kW/h) | 5 (70 mg/kW/h) |
| Central Heating | Head Loss on Water Side (max) (DT=20°C) | mbar | 200 | 200 |
| | Residual Head of System | bar | 0.2 | 0.2 |
| | Expansion Vessel Pre-load Pressure | bar | 0.7 | 0.7 |
| | Maximum Heating Pressure | bar | 3 | 3 |
| | Expansion Vessel Capacity | l | 7 | 7 |
| | Maximum Water Content of System | l | 130 | 130 |
| | Heating Temperature max/min (High temperature) | °C | 82 / 46 | 82 / 46 |
| | Heating Temperature max/min (Low Temperature) | °C | 75 / 20 | 75 / 20 |
| Domestic Hot Water | Domestic Hot Water Temperature (approx) max/min | °C | 56 / 36 | |
| | Specific Flow Rate (10 minutes/DT 30°C) | l/min | 15.3 | |
| | D.H.W. Flow Rate DT=25°C | l/min | 18.3 | |
| | D.H.W. Flow Rate DT=35°C | l/min | 13.1 | |
| | D.H.W. Minimum Flow Rate | l/min | 2.5 | |
| | Pressure of Domestic Hot Water max/min | bar | 6 / 0.2 | |
| | Max. Condensate produced | l/h | 1.8 | 1.8 |
| | PH of condensate | W | 4 | 4 |
| Gas | Nominal Pressure Natural Gas (G20) | mbar | 20 | 20 |
| | Consumption at Nominal Capacity(G20) | $m^3/h$ | 3.01 | 3.01 |
| | Gas Consumption after 10 Minutes* | $m^3$ | 0.35 | 0.35 |
| Electrical Data | Electrical Supply | V/Hz | 230/50 | 230/50 |
| | Power Consumption | W | 118 | 118 |
| | Minimum Ambient Temperature | °C | +5 | +5 |
| | Protection Grade of Electrical System | IP | 24D | 24D |
| | Internal Fuse Rating | | 2A Fast Fuse | 2A Fast Fuse |
| | Weight | Kg | 42 | 41 |
| | Casing Dimensions (D/W/H) | mm | 280/450/750 | 280/450/750 |
| | **G.C. Number** | | **47-116-35** | **41-116-10** |

* Calculated at 70% maximum output
** Calculated on Upper calorific value

## 1.3. Overall View

**ACO** *27/32 MFFI (COMBI)*

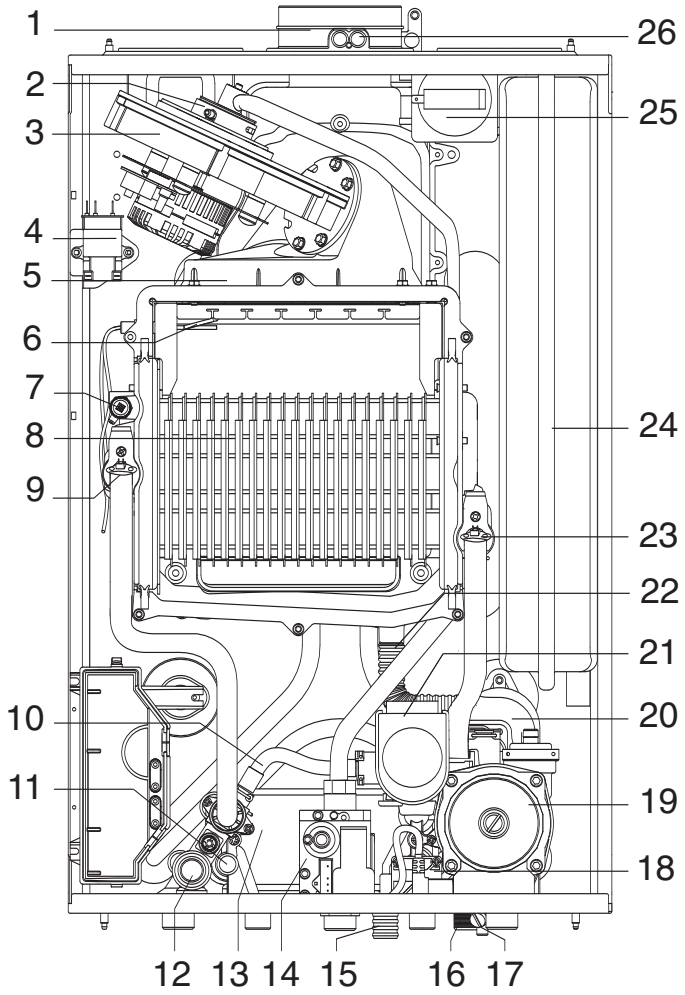


**ACO** *27/32 RFFI (SYSTEM)*

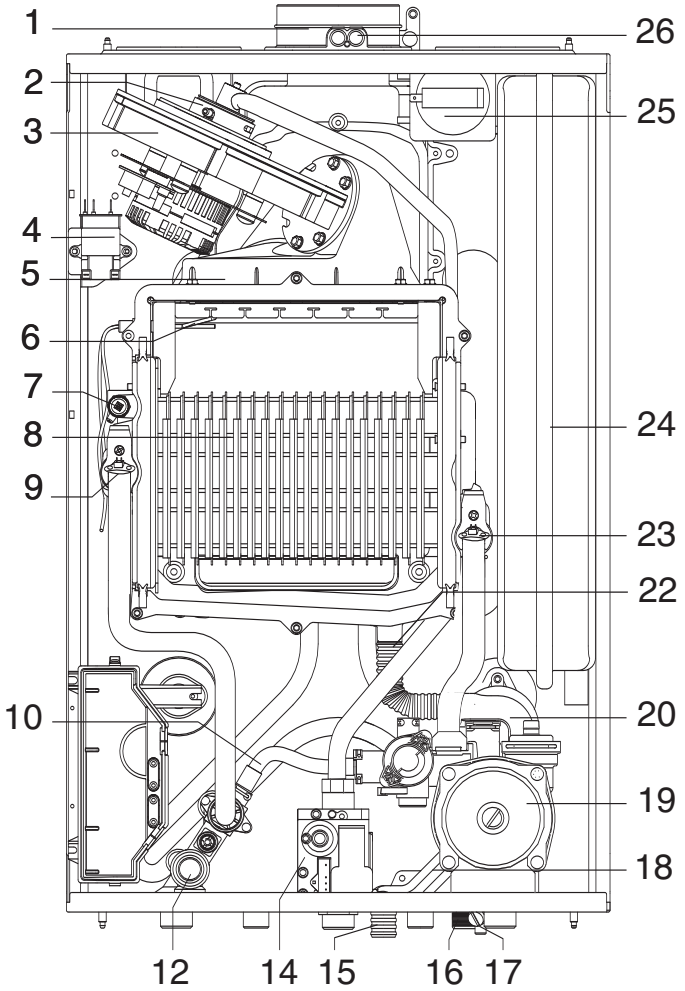


**Fig. 1.0**

Legend:

1. Flue connector
2. Mixer
3. Fan
4. Spark generator
5. Burner
6. Ignition and detection electrode
7. Air release valve
8. Main heat exchanger (aluminium)
9. Central Heating flow temperature probe
10. Automatic by-pass
11. Domestic Hot Water temperature probe
12. Safety valve (3 bar)
13. Secondary heat exchanger
14. Gas valve
15. Condensate discharge
16. Condensate trap inspection cap
17. Drain valve
18. Domestic Hot Water flow switch
19. Circulation pump with automatic air release valve
20. Condensate trap
21. Diverter valve
22. Condensate trap (tube)
23. Central Heating return temperature probe
24. Expansion vessel
25. Air pressure switch
26. Combustion analysis test point

# 2. INSTALLATION

## 2.1. Reference Standards

The technical information and instructions provided herein below are intended for the installer / Servicing Technician so that the unit may be installed and serviced correctly and safely.

In the United Kingdom the installation and initial start up of the boiler must be by a CORGI Registered Installer in accordance with the installation standards currently in effect, as well as with any and all local health and safety standards i.e. CORGI.

In the Republic of Ireland the installation and initial start up of the appliance must be carried out by a Competent Person in accordance with the current edition of I.S.813 "Domestic Gas Installations", the current Building Regulations, reference should also be made to the current ETCI rules for electrical installation.

**This appliance must be installed by a competent installer in accordance with current Gas Safety (installation & use) Regulations.**

The installation of this appliance must be in accordance with the relevant requirements of the Local Building Regulations, the current I.E.E. Wiring Regulations, the bylaws of the local water authority, in Scotland, in accordance with the Building Standards (Scotland) Regulation and Health and Safety document No. 635 "Electricity at work regulations 1989" and in the Republic of Ireland with the current edition of I.S. 813, the Local Building Regulations (IE).

**C.O.S.H.H.**
Materials used in the manufacture of this appliance are non-hazardous and no special precautions are required when servicing.

Installation should also comply with the following British Standard Codes of Practice:

| | |
|---|---|
| **BS 7593:1992** | **Treatment of water in domestic hot water central heating systems** |
| **BS 5546:1990** | **Installation of hot water supplies for domestic purposes** |
| **BS 5440-1:2000** | **Flues** |
| **BS 5440-2:2000** | **Air supply** |
| **BS 5449:1990** | **Forced circulation hot water systems** |
| **BS 6798:2000** | **Installation of gas fired hot water boilers of rated input not exceeding 70kW** |
| **BS 6891:1989** | **Installation of low pressure gas pipe up to 28mm** |
| **BS 7671:2001** | **IEE wiring regulations** |
| **BS 4814:1990** | **Specification for expansion vessels** |
| **BS 5482:1994** | **Installation of L.P.G.** |

and in the Republic of Ireland in accordance with the following Codes of Practice:

| | |
|---|---|
| **I.S. 813** | **Domestic Gas Installations** |

## 2.2. Siting the Appliance

The appliance may be installed in any room or indoor area, although particular attention is drawn to the requirements of the current I.E.E. Wiring Regulations, and in Scotland, the electrical provisions of the Building Regulations applicable in Scotland, with respect to the installation of the combined appliance in a room containing a bath or shower, the location of the boiler in a room containing a bath or shower should only be considered if there is no alternative.

**Where a room-sealed appliance is installed in a room containing a bath or shower the appliance and any electrical switch or appliance control, utilising mains electricity should be situated so that it cannot be touched by a person using the bath or shower, specifically in accordance with current IEE Wiring Regulations.**

The location must permit adequate space for servicing and air circulation around the appliance as indicated in Section 2.4.
The location must permit the provision of an adequate flue and termination.
For unusual locations special procedures may be necessary.
BS 6798-2000 gives detailed guidance on this aspect.
A compartment used to enclose the appliance must be designed specifically for this purpose. No specific ventilation requirements are needed for the installation within a cupboard.
This appliance is not suitable for outdoor installation.

***The type C appliances (in which the combustion circuit, air vent intake and combustion chamber are air-tight with respect to the room in which the appliance is installed) can be installed in any type of room.***

Secondary ventilation is not required with this boiler. The boiler must be installed on a solid, non-combustible, permanent wall to prevent access from the rear.

## 2.3. Overall Dimensions

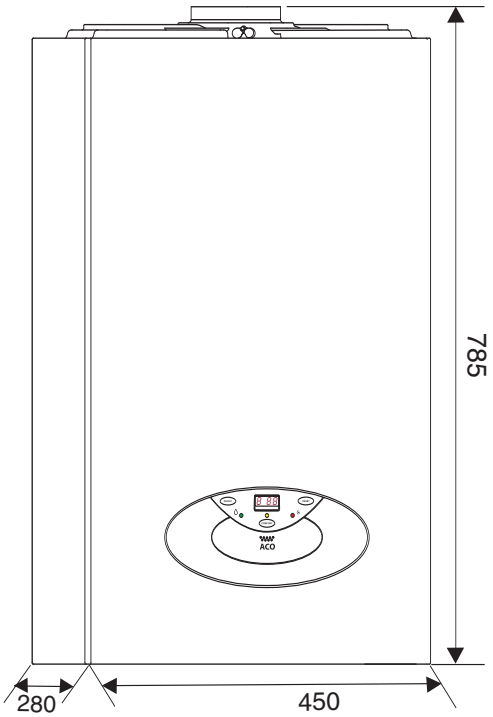


**Fig. 2.0**

***Legend:***

**A** = Central Heating Flow (3/4") (22mm Copper Tail)
**B** = Domestic Hot Water Outlet (1/2") (15 mm Copper Tail)
**C** = Gas Inlet (3/4") ( 22mm Copper Tail)
**D** = Domestic Cold Water Inlet (1/2") (15mm Copper Tail)
**E** = Central Heating Return (3/4") (22mm Copper Tail)
**F** = Condensate discharge
**SV outlet** = 1/2" Female BSP (Not Shown)

## ACO *27/32 MFFI (COMBI)*

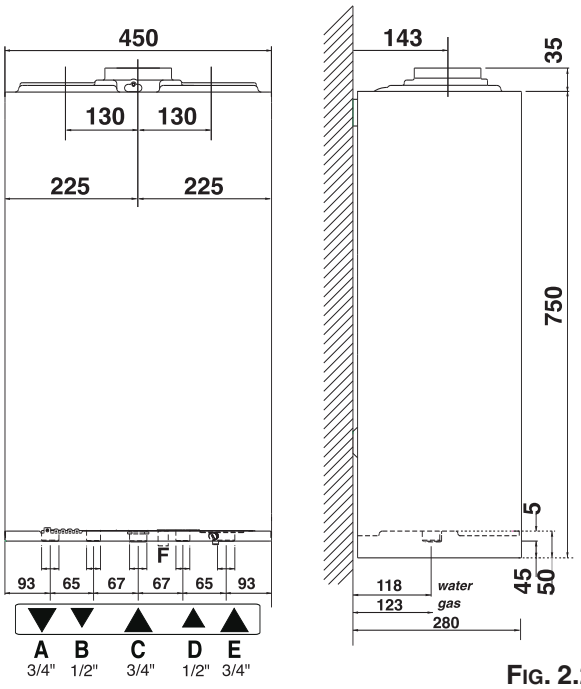


**Fig. 2.2**

## ACO *27/32 RFFI (SYSTEM)*

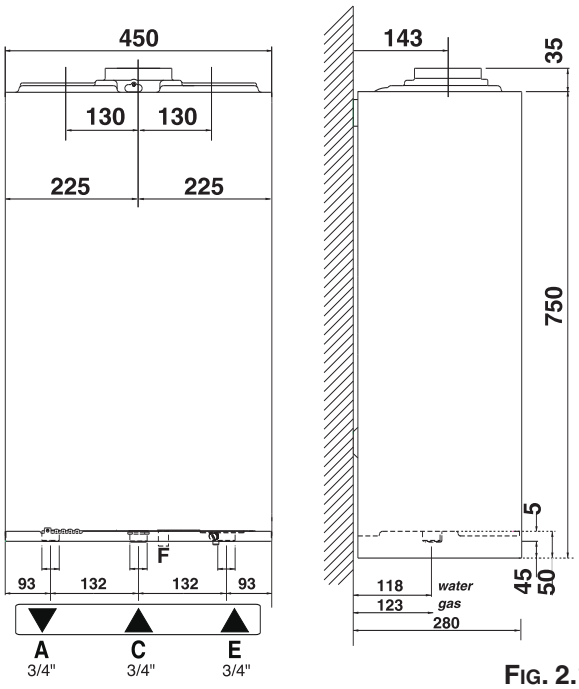


**Fig. 2.1**

## *2.4. MINIMUM CLEARANCES*

In order to allow access to the interior of the boiler for maintenance purposes, the boiler must be installed in compliance with the clearance requirements indicated in the diagram below.

## ACO *27/32 MFFI/RFFI*

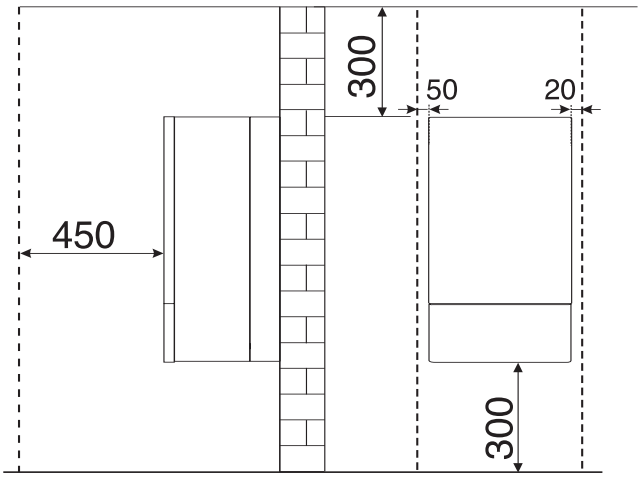


**Fig. 2.3**

## 2.5. Mounting the Appliance

After removing the boiler from its packaging, remove the template from the separate box containing the connection kit. Note: Pay particular attention to any test water that may spill from the appliance.

Place the template in the position the appliance is to be mounted and after ensuring it is hanging squarely, use it to mark the holes for the hanging bracket, connection kit and flue pipe(s) **NB:** For further information relating to the flue installation please refer to Section 2.9 Flue Connection. (If the appliance is to be fitted on a wall of combustible material, the wall **must** be protected by a sheet of fireproof material).
If the appliance is to be fitted into a timber framed building, guidance should be sought from the Institute of Gas Engineers document Ref: IGE/UP/7.

2.5.1. Drill the wall and plug using those supplied with the connections kit, position the hanging bracket and secure with the wall screws supplied, assemble the connection kit and secure to the wall. **Note:** It is highly recommended that a spirit level be used to position the appliance to ensure that it is perfectly level.

2.5.2. Position the appliance on the hanging bracket and connect the connection kit to the boiler connections. (see also Sections 2.7 Gas Connections, 2.8 Water Connections & Fig. 2.5).

For safety purposes, have a competent person carefully check the electrical system in the property, as the manufacturer will not be held liable for damage caused by the failure to earth the appliance properly or by anomalies in the supply of power. Make sure that the residential electrical system is adequate for the maximum power absorbed by the unit, which is indicated on the rating plate. In addition, check that the section of cabling is appropriate for the power absorbed by the boiler.

## 2.6. Electrical Connection

The boiler operates with alternating current, as indicated in the technical data table (Section **1.2**), where the maximum absorbed power is also indicated. Make sure that the connections for the neutral and live wires correspond to the indications in the diagram. The appliance electrical connections are situated inside the electrical box (see Section 2.12).
***Important!***
In the event that the power supply cable must be changed, replace it with one with the same specifications. Make the connections to the terminal board located within the control panel, as follows:

- The yellow-green wire should be connected to the terminal marked with the earth symbol; make sure to re-use the ferrule mounted on the other supply cable;
- The blue wire should be connected to the terminal marked "N";
- The brown wire should be connected to the terminal marked "L".

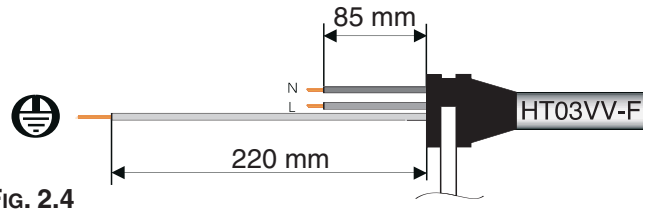


**Fig. 2.4**

Note: The diagrams for the electrical system are indicated in Sections 2.12 and 2.13.

**Warning, this appliance must be earthed.**

External wiring to the appliance must be carried out by a competent person and be in accordance with the current I.E.E. Regulations and applicable local regulations.
The appliance is supplied with a fly-lead already connected, this must be connected to a 240v supply fused at 3A and must facilitate complete electrical isolation of the appliance, by the use of a fused double pole isolator having a contact separation of at least 3 mm in all poles or alternatively, by **means of a 3 A** fused three pin plug and unswitched shuttered socket outlet both complying with BS 1363.
The point of connection to the Electricity supply must be readily accessible and adjacent to the appliance unless the appliance is installed in a bathroom when this must be sited outside the bathroom (see Section 2.2).
Should external controls be required, the design of the external electrical circuits should be undertaken by a competent person, see Sections 2.12 and 4 for further information.

## 2.7. Gas Connection

The local gas region contractor connects the gas meter to the service pipe.
If the gas supply for the boiler serves other appliances ensure that an adequate supply is available both to the boiler and the other appliances when they are in use at the same time.
Pipe work must be of an adequate size. Pipes of a smaller size than the boiler inlet connection must not be used.

## 2.8. Water Connections

### View of the Boiler Connections

**ACO** *27/32 MFFI (COMBI)*

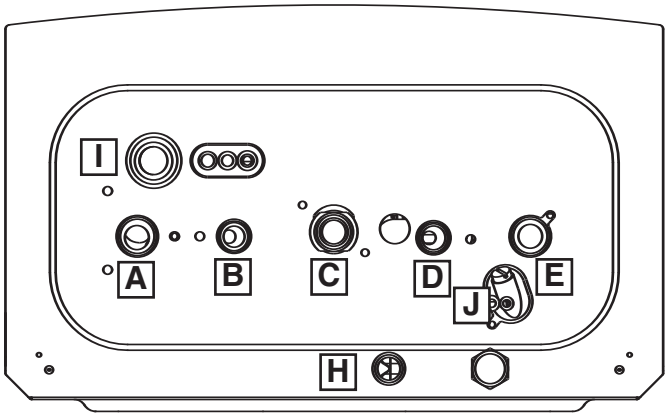


**ACO** *27/32 RFFI (SYSTEM)*

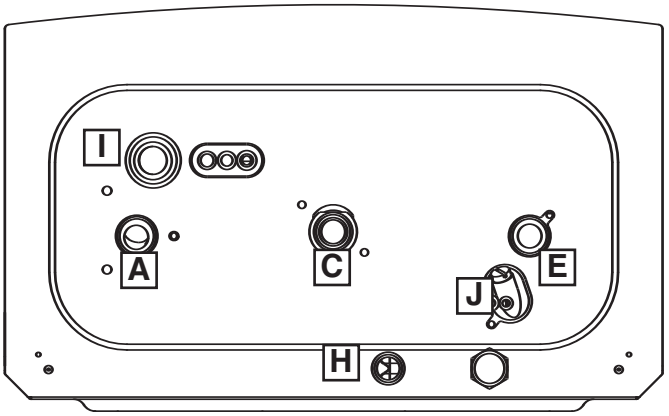


**Fig. 2.5**

***Legend:***

***A = Central Heating Flow***
***B = Domestic Hot Water Outlet***
***C = Gas Inlet***
***D = Domestic Cold Water Inlet***
***E = Central Heating Return***
***H = Condensate discharge***
***I = Safety valve discharge***
***J = Drain valve***

***Central Heating***

Detailed recommendations are given in BS 6798:2000 and BS 5449-1:1990, the following notes are given for general guidance.

*Pipe Work:*

Copper tubing to BS EN 1057:1996 is recommended for water pipes. Jointing should be either with capillary soldered or compression fittings.

Where possible pipes should have a gradient to ensure air is carried naturally to air release points and water flows naturally to drain taps.

The appliance has a built-in automatic air release valve, however it should be ensured as far as possible that the appliance heat exchanger is not a natural collecting point for air.

Except where providing useful heat, pipes should be insulated to prevent heat loss and avoid freezing.

Particular attention should be paid to pipes passing through ventilated spaces in roofs and under floors.

*By-pass:*

The appliance includes an automatic by-pass valve, which protects the main heat exchanger in case of reduced or interrupted water circulation through the heating system, due to the closing of thermostatic valves or cock-type valves within the system.

*System Design:*

This boiler is suitable only for sealed systems.

*Drain Cocks:*

These must be located in accessible positions to permit the draining of the whole system. The taps must be at least 15mm nominal size and manufactured in accordance with BS 2870:1980.

*Safety Valve Discharge:*

The discharge should terminate facing downwards on the exterior of the building in a position where discharging (possibly boiling water & steam) will not create danger or nuisance, but in an easily visible position, and not cause damage to electrical components and wiring.

The discharge must not be over an entrance or a window or any other type of public access.

*Condensate Discharge:*

A flexible hose is supplied for connection to the condensate discharge point **H** (Fig. 2.5). The condensate discharge hose from the boiler must have a continuous fall of 2.5° and must be inserted by at least 50 mm into a suitable acid resistant pipe - e.g. plastic waste or overflow pipe. The condensate discharge pipe must have a continuous fall and preferably be installed and terminated within the building to prevent freezing.

**Note: The flexible condense hose supplied with the appliance can be extended by pulling the tube opening the ribbed pipe.**

***Residual Head of the Boiler ΔT20°C***

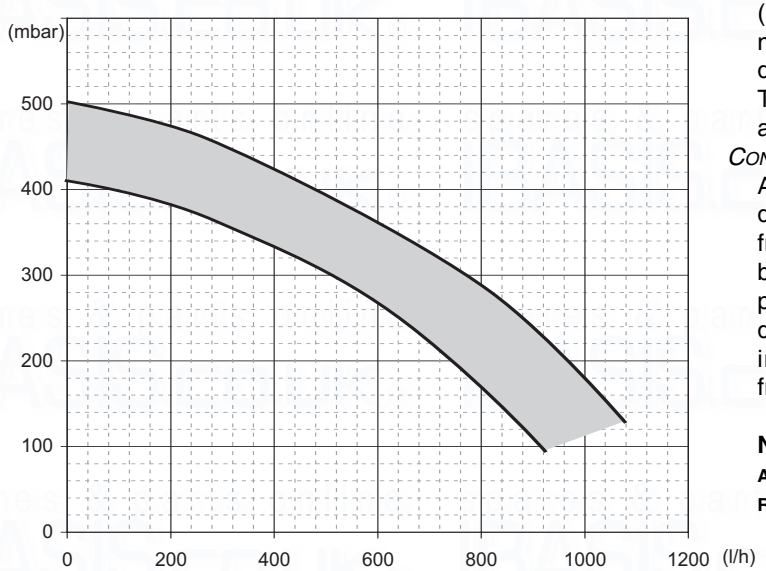


**Fig. 2.6**

The discharge pipe must be terminated in a suitable position:

i) Connecting in to an internal soil stack (at least 450 mm above the invert of the stack). A trap giving a water seal of at least 75 mm must be incorporated into the pipe run, there also must be an air break upstream of the trap.
ii) Connecting into the waste system of the building such as a washing machine or sink trap. The connection must be upstream of the washing machine/sink (If the connection is down stream of the waste trap then an additional trap giving a minimum water seal of 75 mm and an air break must be incorporated in the pipe run, as above.
iii) Terminating into a gully, below the grid level but above the water level.
iv) Into a soakway.

NOTE: If any condensate pipe work is to be installed externally, then it should be kept to a minimum and be insulated with a waterproof insulation and have a continuous fall.

Some examples of the type of condensate drains can be found on pages 11 and 12.

*AIR RELEASE POINTS:*

These must be fitted at all high points where air naturally collects and must be sited to facilitate complete filling of the system.

The appliance has an integral sealed expansion vessel to accommodate the increase of water value when the system is heated.

It can accept up to 7 l (1.5 gal) of expansion water. If the heating circuit has an unusually high water content, calculate the total expansion and add an additional sealed expansion vessel with adequate capacity.

*MAINS WATER FEED - CENTRAL HEATING:*

There must be no direct connection to the mains water supply even through a non-return valve, without the approval of the Local Water Authority.

*FILLING:*

A method for initially filling the heating system is supplied with the connection kit. The filling loop is connected between the cold water inlet and the central heating flow connections, and incorporates a non-return valve. To operate the filling loop, it is necessary to open both quarter turn handles, once the required pressure has been achieved, close both handles and disconnect the hose in accordance with water byelaws and cap off with the cap supplied. NOTE: The installer should ensure that there are no leaks as frequent filling of the heating system can lead to premature scaling of the main exchanger and failure of hydraulic components.

*DOMESTIC WATER*

The domestic water must be in accordance with the relevant recommendation of BS 5546:1990. Copper tubing to BS EN 1057:1996 is recommended for water carrying pipe work and must be used for pipe work carrying drinking water, a scale reducer should also be used to reduce the risk of scale forming in the domestic side of the heat exchanger.

*UNDER FLOOR HEATING SYSTEMS:*

In the event of an under floor heating system, fit a safety thermostat on the boiler flow (see Section 2.12). This thermostat should be positioned at a safe distance from the boiler to ensure the correct operation of the same. If the thermostat is positioned too close to the boiler, the water remaining in the boiler after domestic hot water has been drawn will flow into the central heating system and may cause the thermostat contact to open without there being any real danger of the system being damaged, this would lead to a boiler shutdown both in D.H.W. mode and C.H. mode, and the error code **"E08"** would be displayed; boiler operation resumes automatically when the thermostat contact closes on cooling.

Should the thermostat fail to be installed as recommended, the under floor heating system can be protected by installing a thermostatic valve upstream from the thermostat in order to prevent the flow of excessively hot water towards the system.

## ACO *27/32 MFFI (COMBI)*

## ACO *27/32 RFFI (SYSTEM)*

1. Internal termination of condensate drainage pipe to internal stack

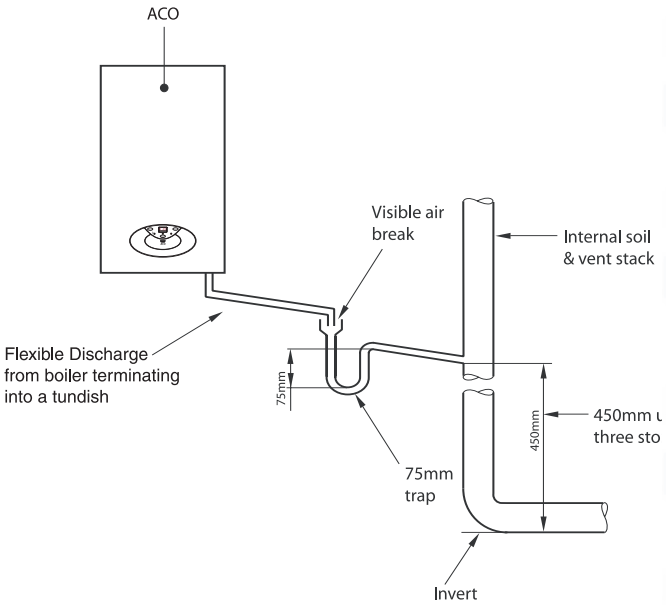

2. External termination of condensate drainage pipe via internal discharge branch (e.g. sink waste) and condensate siphon

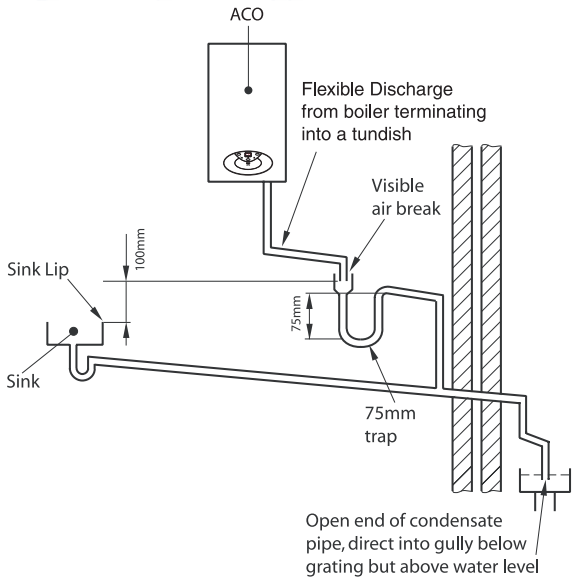


3. External termination of condensate drainage pipe via internal discharge branch (e.g. sink waste - proprietary fitting).

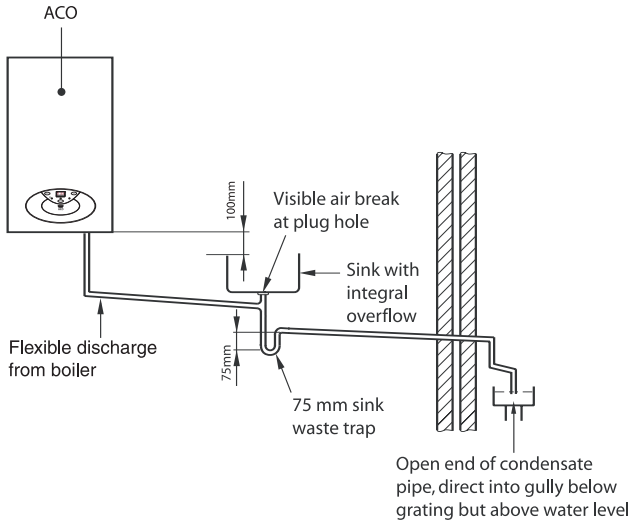


4. External termination of condensate drainage pipe via condensate siphon

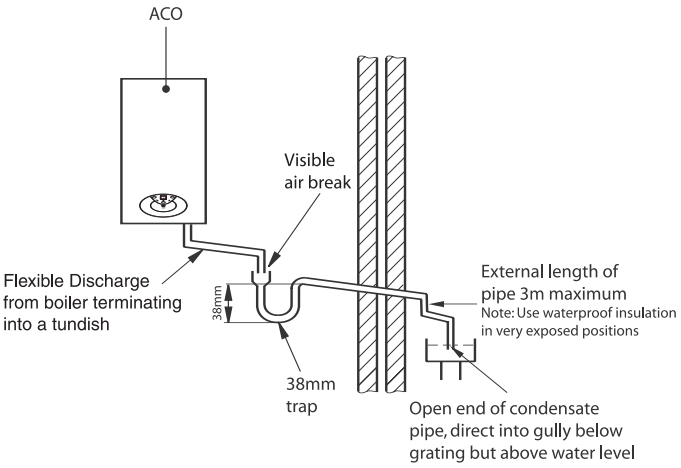


## Water Treatment

The boiler is equipped with an aluminium alloy main heat exchanger.
The detailed recommendations for water treatment are given in BS 7593:1992 (Treatment of water in domestic hot water central heating systems); the following notes are given for general guidance;

- If the boiler is installed on an existing system, any unsuitable additives must be removed;
- Under no circumstances should the boiler be fired before the system has been thoroughly flushed; the flushing procedure must be in line with BS7593:1992.
  We highly recommend the use of a flushing detergent appropriate for the metals used in the aluminium alloy circuit. These include (Fernox Superfloc, BetzDearborn Sentinel X300 or X400), whose function is to dissolve any foreign matter that may be in the system;
  In hard water areas or where large quantities of water are in the system the treatment of the water to prevent premature scaling of the main heat exchanger is necessary.

  The formation of scale strongly compromises the efficiency of the thermic exchange because small areas of scale cause a high increase of the temperature of the metallic walls and therefore add to the thermal stress of the heat exchanger.
  Demineralised water is more aggressive so in this situation it is necessary to treat the water with an appropriate corrosion inhibitor.
- Any treatment of water by additives in the system for frost protection or for corrosion inhibition has to be absolutely suitable for all the metals used in the circuit including the aluminium alloys.
  The use of a corrosion inhibitor in the system such as Fernox MB-1Copal, BetzDeaborn Sentinel X100 System Inhibitor is recommended to prevent corrosion (sludge) damaging the boiler and system;
- If anti-freeze substances are to be used in the system, check carefully that they are compatible with the aluminium.
  In particular, DO NOT USE ordinary ETHYLENE GLYCOL, since it is corrosive in relation to aluminium and its alloy, as well being toxic.
  MTS suggests the use of suitable anti-freeze products such as Fernox ALPHI 11, which will prevent rust and incrustation taking place.
  Periodically check the pH of the water/anti-freeze mixture of the boiler circuit and replace it when the amount measured is out of the range stipulated by the manufacturer ( 7 < pH < 8).
  DO NOT MIX DIFFERENT TYPES OF ANTI-FREEZE
- In under-floor systems, the use of plastic pipes without protection against penetration of oxygen through the walls can cause corrosion of the system's metal parts (metal piping, boiler, etc), through the formation of oxides and bacterial agents.
  To prevent this problem, it is necessary to use pipes with an "oxygen-proof barrier", in accordance with standards DIN 4726/4729**. If pipes of this kind are not used, keep the system separate by installing heat exchanger*s of those with a specific system water treatment.***

***IMPORTANT***
***Failure to carry out the water treatment procedure will invalidate the appliance warranty.***

## 2.9. Connecting the Flue

**Important!!**
**Before connecting the flue, ensure that 1 litre of water has been poured into the exhaust connection to fill the condensate trap (Fig.2.7). Should the trap be empty there is a temporary risk of flue gasses escaping into the room.**

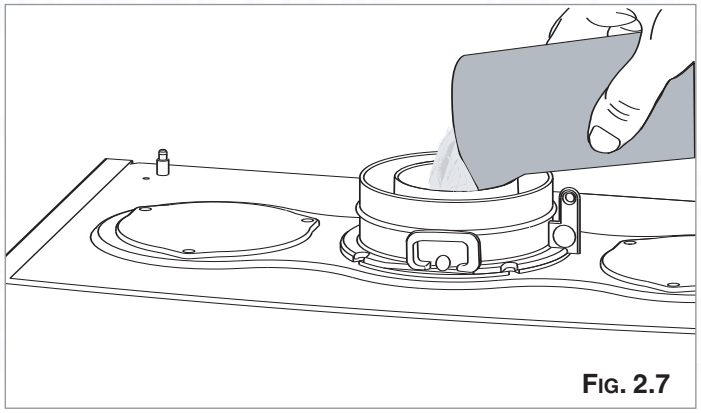

Fig. 2.7

### *Flue System*

The provision for satisfactory flue termination must be made as described in BS 5440-1.
The appliance must be installed so that the flue terminal is exposed to outdoor air.
The terminal must not discharge into another room or space such as an outhouse or lean-to.
It is important that the position of the terminal allows a free passage of air across it at all times.
The terminal should be located with due regard for the damage or discolouration that might occur on buildings in the vicinity, it must also be located in a place not likely to cause nuisance.
In cold or humid weather water vapour may condense on leaving the flue terminal.
The effect of such "steaming" must be considered.
If the terminal is 2.1 metres above a balcony, above ground or above a flat roof to which people have access, then a suitable stainless steel terminal guard must be fitted.

The minimum acceptable spacing from the terminal to obstructions and ventilation openings are specified in Fig. 2.9.

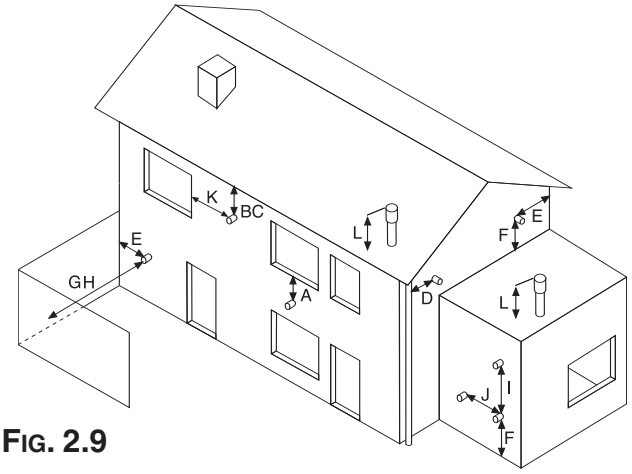


Fig. 2.9

| *TERMINAL POSITION* | *mm* |
|---|---|
| *A - Directly below an open window or other opening* | *300* |
| *B - Below gutters, solid pipes or drain pipes* | *75* |
| *C - Below eaves* | *200* |
| *D - From vertical drain pipes and soil pipes* | *75* |
| *E - From internal or external corners* | *300* |
| *F - Above ground on a public walkway or patio* | *2100* |
| *G - From a surface facing a terminal* | *2500* |
| *H - From a terminal facing a terminal* | *2500* |
| *I - Vertically from a terminal in the same wall* | *1500* |
| *J - Horizontally from a terminal in the same wall* | *300* |
| *K - Horizontally from an opening window* | *300* |
| *L - Fixed by vertical flue terminal* | |

Ø 60/100 mm

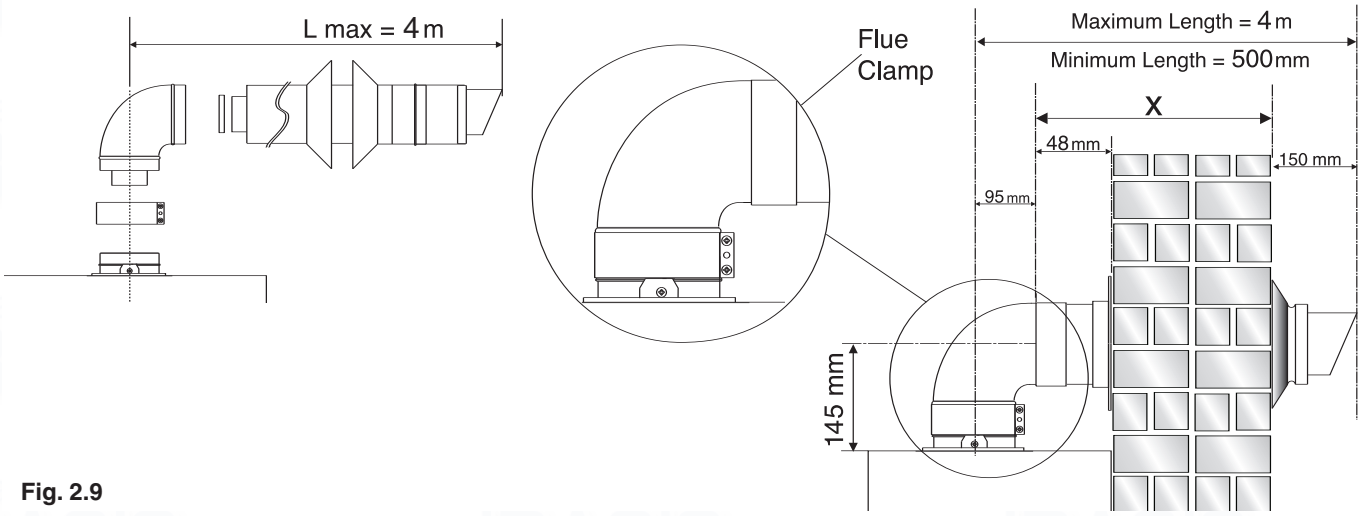


Fig. 2.9

**Warning**
The exhaust gas ducts must not be in contact with or close to inflammable material and must not pass through building structures or walls made of inflammable material.
When replacing an old appliance, the flue system must be changed.

**Important**
Ensure that the flue is not blocked.
Ensure that the flue is supported and assembled in accordance with these instructions.

**Installation without extension**

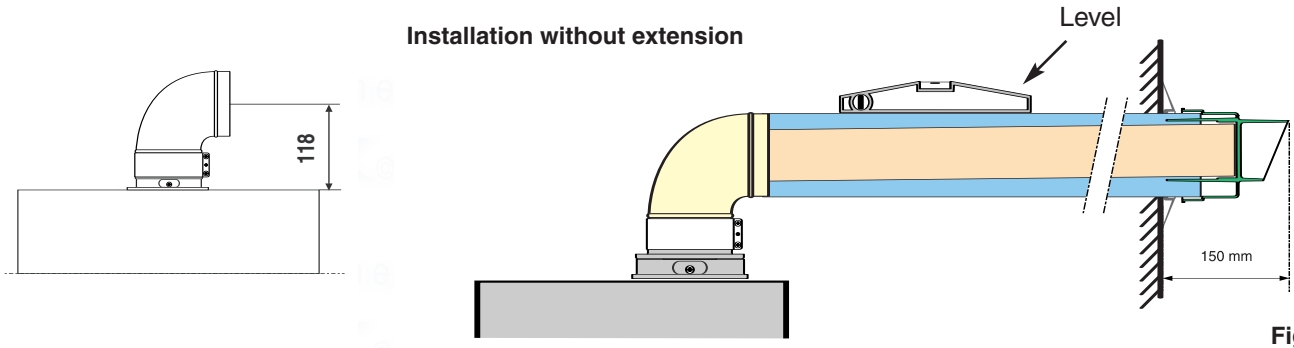


**Fig. 2.10**

**Installation with extension**

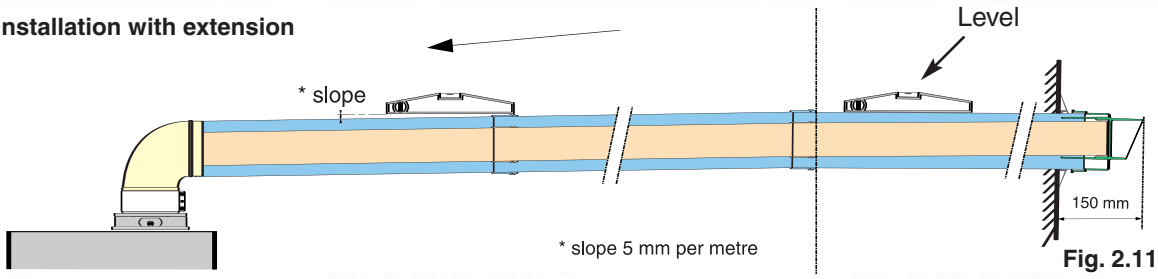


**Fig. 2.11**

## 2.9.1 Fitting the Coaxial Flue (Ø 60 / 100 Horizontal)

***Contents:***
***1x Silicone O-Ring (60mm)***
***1x Elbow (90°)***
***2x Wall Seals (Internal & External)***
***1x Flue Pipe including Terminal (1 metre - 60/100)***
***1x Flue Clamp***
***1x Screws***
***1x Seal***

Once the boiler has been positioned on the wall, insert the elbow into the socket and rotate to the required position. NOTE: It is possible to rotate the elbow 360° on its vertical axis.

Using the flue clamp, seals and screws supplied **(Fig 2.12)** secure the elbow to the boiler.

The 1 metre horizontal flue kit (3318073) supplied is suitable for an exact **X dimension** of 815mm.

Measure the distance from the face of the external wall to the face of the flue elbow **(X - Fig 2.9),** this figure must now be subtracted from 815mm, you now have the total amount to be cut from the plain end of the flue.

Draw a circle around the outer flue and cut the flue to the required length taking care not to cut the inner flue, next cut the inner flue ensuring that the length between the inner and outer flue is maintained. **(Fig 2.12)**.
*e.g.*
*X = 555mm*
*815-555 = 260mm (Length to be cut from the plain end of the flue).*

Once cut to the required length, ensure that the flue is free from burrs and reassemble the flue. If fitting the flue from inside of the building attach the grey outer wall seal to the flue terminal and push the flue through the hole, once the wall seal has passed through the hole, pull the flue back until the seal is flush with the wall. Alternatively, the flue can be installed from outside of the building, the grey outer seal being fitted last.

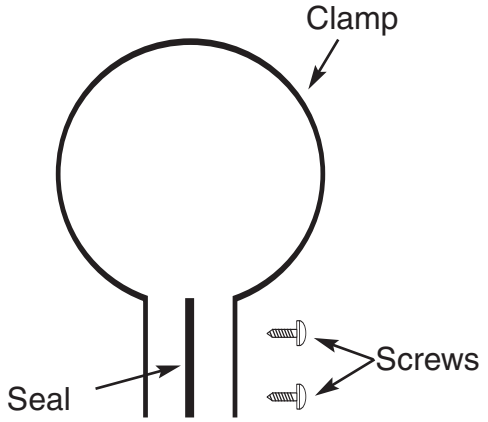


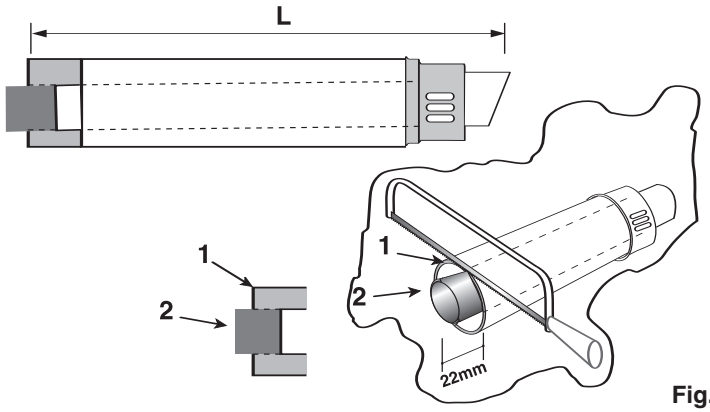


Fig. 2.12

Should the flue require extending, the flue connections are push fit, however, one flue bracket should be used to secure each metre of flue.

NOTE: SEE PAGE 19 FOR MAXIMUM AND MINIMUM FLUE RUNS.

## 2.9.2 FITTING THE 5" FLUE (Ø 80 / 125 HORIZONTAL/VERTICAL)

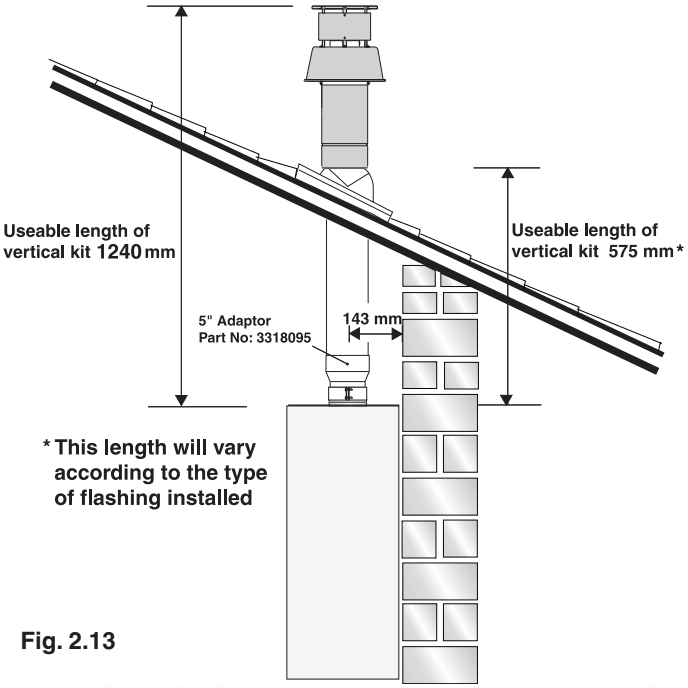


Fig. 2.13

Once the boiler has been positioned on the wall, it is necessary to insert the Ø80/125 adaptor (**FIG. 2.13**) for both horizontal and vertical flue runs into the boiler flue socket (not supplied with flue kit - **Part No 3318095**).

Push the adaptor onto the boilers flue connection, grease the seals then add extensions or elbows as required, secure the adaptor, using the clamp and screws provided.

To fit extensions or elbows it is first necessary to ensure that the lip seal is fitted correctly into the inner flue, once verified, it is simply necessary to push them together, no clamps are necessary to secure the flue components.

Before proceeding to fit the flue, ensure that the maximum flue length has not been exceeded (See the tables on Page 19) and that all elbows and bends have been taken into consideration, the maximum flue length is 10 metres, for each additional 90° elbow 1 metre must be subtracted from the total flue length, and for each 45° 0.5 metres must be subtracted from the total flue length **(the height of the vertical adaptor and a 45° bend can be seen in Fig. 2.14 and a 90° bend in Fig. 2.15)**.

NOTE: **DO NOT** CUT THE VERTICAL FLUE KIT.

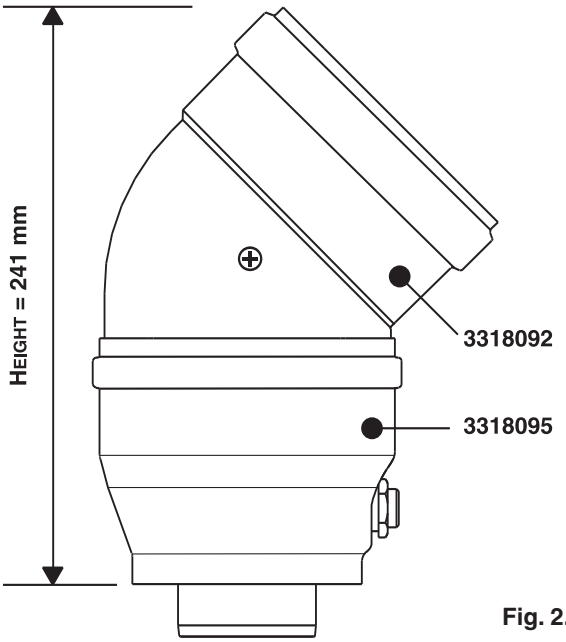


Fig. 2.14

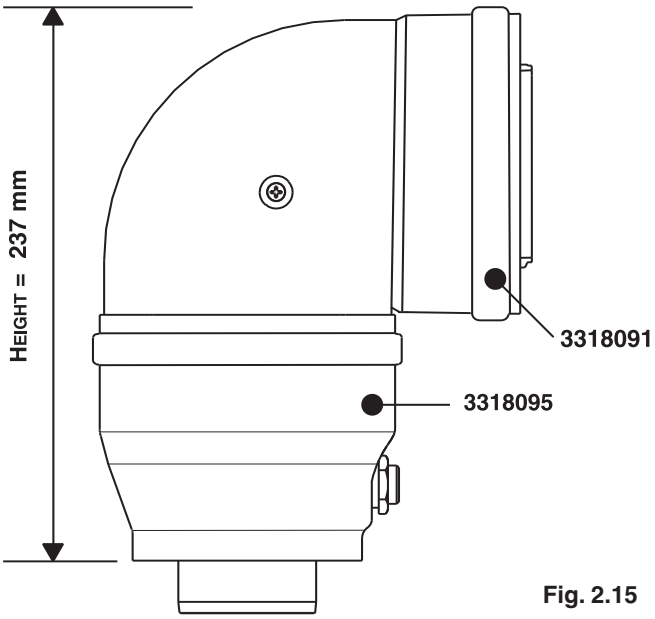


Fig. 2.15

## 2.9.3. Fitting the Coaxial Flue (Ø 60 / 100 Vertical)

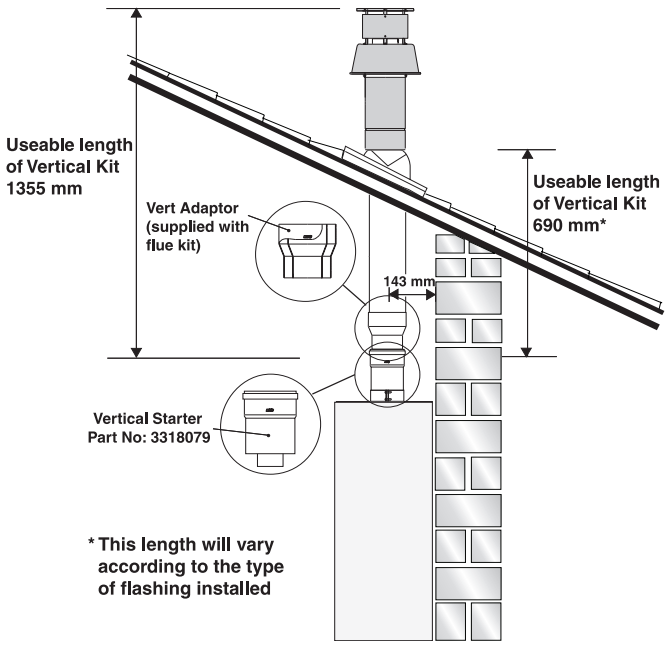


**Fig. 2.16**

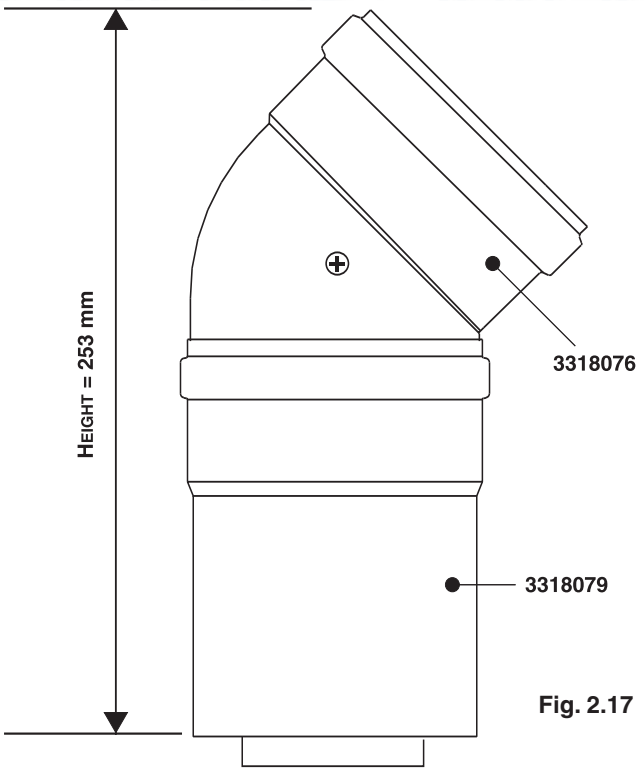


**Fig. 2.17**

Note: See page 19 for maximum and minimum flue runs.

***Contents:***
***1x Silicone O-Ring (60mm)***
***1x Conical Adaptor (60/100mm)***
***1x Vertical Flue Kit (80/125mm)***
***3x Screws***

The vertical flue kit is supplied with a specially designed weather proof terminal fitted, it can be used either with a flat roof or a pitched roof.

The Vertical flue kits useable lengths with the pitched roof flashings are indicated in **Fig. 2.16**.

Before proceeding to fit the flue, ensure that the maximum flue length has not been exceeded (See the tables on Page 19) and that all elbows and bends have been taken into consideration, the maximum flue length is 4 metres, for each additional 90° elbow 1 metre must be subtracted from the total flue length, and for each 45° 0.5 metres must be subtracted from the total flue length **(the height of the vertical adaptor and a 45° bend can be seen in Fig. 2.17)**.

Mark the position of the flue hole in the ceiling and/or roof (see **Fig. 2.15** for distance from wall to the centre of the flue).

Cut a 120mm diameter hole through the ceiling and/or roof and fit the flashing plate to the roof.

***DO NOT*** cut the vertical flue kit.

To connect the vertical flue kit directly to the boiler, place the vertical starter kit **(Part No. 3318079)** (see **Fig. 2.16**) onto the exhaust manifold and secure with the clamp, fit the vertical adaptor onto the vertical starter kit (note: there is no need to use a clamp to secure this as it is a push fit connection), the vertical flue kit must then be inserted through the roof flashing, this will ensure that the correct clearance above the roof is provided as the terminal is a fixed height.

Should extensions be required, they are available in 1 metre **(Part No. 3318077)**, 500mm **(Part No. 3318078)** and 160mm lengths, they must be connected directly to the vertical starter kit before connecting the adaptor to allow the vertical flue kit to be fitted. In the event that extension pieces need to be shortened, they ***must*** only be cut at the male end and it must be ensured that the inner and outer flue remain flush (**Fig. 2.12**)

When utilising the vertical flue system, action must be taken to ensure that the flue is supported adequately to prevent the weight being transferred to the appliance flue connection by using 1 flue bracket per extension.

When the flue passes through a ceiling or wooden floor, there must be an air gap of 25mm between any part of the flue system and any combustible material. The use of a ceiling plate will facilitate this. Also when the flue passes from one room to another a fire stop must be fitted to prevent the passage of smoke or fire, irrespective of the structural material through which the flue passes.

## 2.9.4. Fitting the Twin Pipe (Ø80 / 80)

Note: See page 19 for maximum and minimum flue runs.

Where it is not possible to terminate the flue within the distance permitted for coaxial flues, the twin flue pipe can be used by fitting a special adaptor to the flue connector and using the aperture for the air intake located on top of the combustion chamber.

Always ensure that the flue is adequately supported, using one flue bracket per extension and avoiding low points. (MTS supply suitable clamps as Part No. 705778).
To utilise the air intake it is necessary to:

1) Take the air intake cover off the top of the appliance
2) Assemble the flange on the header supplied with the boiler
3) Insert the header on the tube or the elbow up until the lower stop (you do not have to use the washer).
4) Insert the elbow/header in the boiler air intake hole and fasten it with screws.

The twin flue pipes can be fitted with or without additional elbows and need no clamps, simply ensure that the red o-ring is inserted in the female end of the flue pipe and push the extension piece fully into the previous section of flue pipe or elbow, check that the o-ring is not dislodged when assembling the flue (greasing the seal will aid assembly).

Twin pipe can also be converted back to Coaxial flue to enable vertical termination with a coaxial kit by using the pipe bridge (Twin - Coaxial Adaptor - Part No. 3318089). When running the twin flue pipe vertically.

It is not possible to terminate concentrically horizontally. Termination is only possible with separate air and exhaust terminals.

When siting the twin flue pipe, the air intake and exhaust terminals must terminate on the same wall, the centres of the terminals **must** be a minimum of 280 mm apart and the air intake **must** not be sited above the exhaust terminal (refer to Fig. 2.20). The air intake pipe can be run horizontally, however, the terminal and the final 1 metre of flue must be installed either horizontally or with a slight fall away from the boiler to avoid rain ingress.

It is also strongly recommended that the air intake pipe run be constructed of insulated pipe to prevent condense forming on the outside of the tube.

The maximum permissible flue length for twin flue is dependent on the type of run used.
For flue runs with the intake and exhaust pipes under the same atmospheric conditions (Type 4) the maximum length is 38 metres (27kW) and 48 metres (32kW), for runs with the terminals under different atmospheric conditions (Type 5) the exhaust terminal **must** extend 0.5 metres above the ridge of the roof (this is not obligatory if the exhaust and air intake pipes are located on the same side of the building). For Type 5 also, the maximum permissible combined length is 51 metres (27kW) and 49 metres (32kW).

The maximum length is reached by combining the total lengths of both the air intake and exhaust pipes. Therefore a maximum length of 40 metres for example, will allow a flue run of 20 metres for the air intake and 20 metres for the exhaust pipes, also for each 90° elbow 2.2 metres must be subtracted from the total length and for each 45° elbow 1.4 metres must be subtracted from the total flue length.

Some of the acceptable flue configurations are detailed on page 20.

For further information relating to flue runs not illustrated, please contact the Technical Department on 0870 241 8180.

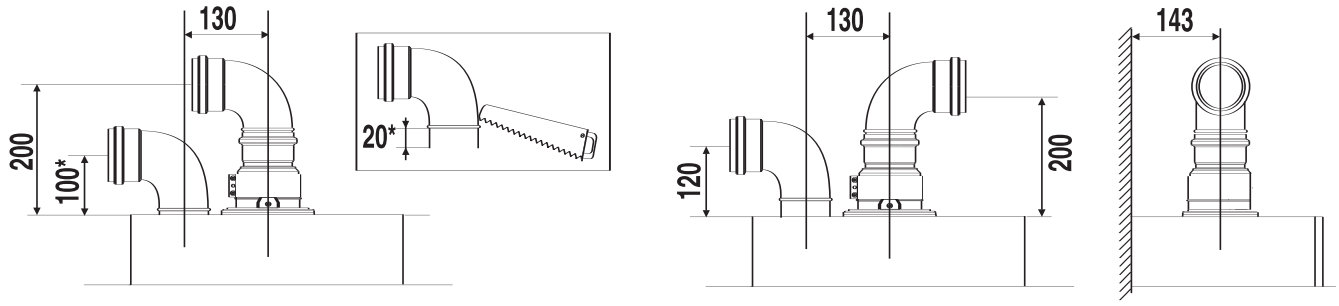


Fig. 2.18

In the event that the air intake and exhaust are run to the left, it will be necessary to reduce the height of the air intake by cutting 20mm from the base of the air intake elbow (see Fig. 2.18)

In the event that twin flue pipes are used, and the boiler has a side clearance of less than 60mm from the wall, it is necessary to cut a larger diameter hole for the flue pipe, this should be ø10 cm, this will then allow for easier assembly of the air intake elbow and the tube outside the wall (see Fig. 2.19).

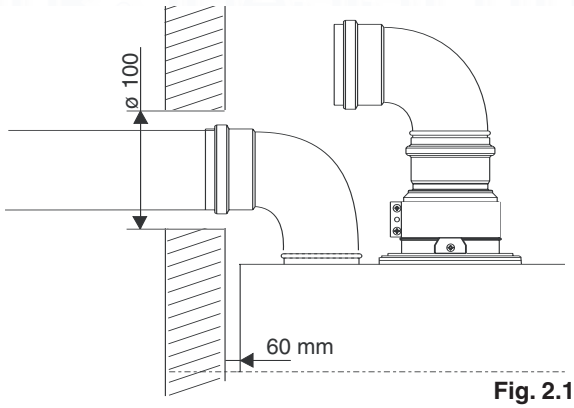


Fig. 2.19

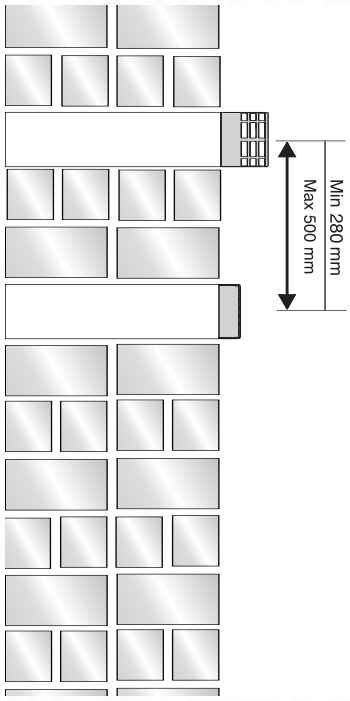


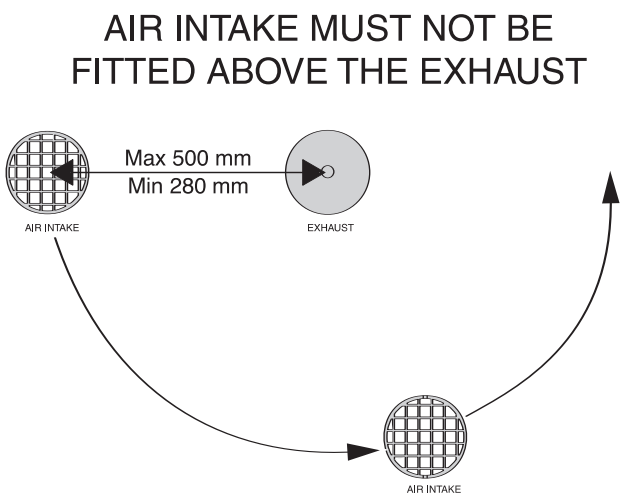


Fig. 2.20

For coaxial systems, the maximum development value, mentioned in the table below also takes into account an elbow.
For twin flue systems the maximum development value, mentioned in the table includes the exhaust gas/air intake terminal.

Type 5 outlets should respect the following instructions:
1- Use the same ø 80 mm flue pipes for the air intakes and exhaust gas ducts.
2- If you need to insert elbows in the air intake and exhaust gas ducts, you should consider for each one the equivalent length to be included in the calculation of developed length.
3- The exhaust gas duct should jut above the roof by at least 0.5 m.
4- The intake and exhaust gas ducts in Type 5 must be installed on the same wall, or where the exhaust is vertical and the air intake horizontal, the terminals must be on the same side of the building.

| 27 MFFI | Exhaust Type | Maximum Extension Exhaust/Air (m) | Diameter of Pipes (mm) | Reduction 45° (m) | Reduction 90° (m) |
|---|---|---|---|---|---|
| Coaxial Systems | Type 1<br>Type 1 | 4 (Horizontal)<br>15 (Horizontal) | Ø 60/100<br>Ø 80/125 | 0.5<br>0.5 | 1<br>1 |
| | Types 2 & 3 | 4 (Vertical)<br>15 (Vertical) | Ø 60/100<br>Ø 80/125 | 0.5<br>0.5 | 1<br>1 |
| Twin Pipe Systems | Type 4 | 38 (Air Intake & Exhaust Equal Lengths) | Ø 80/80 | 0.25 | 0.5 |
| | Type 5 | 1+50 (Air Intake 1 Metre and Exhaust 50 Metres) | Ø 80/80 | 0.25 | 0.5 |

There are some different types of flue systems shown on Page 20.
For additional information regarding the flue accessories, please consult the Flue Pipe Accessories manual.

| 32 MFFI | Exhaust Type | Maximum Extension Exhaust/Air (m) | Diameter of Pipes (mm) | Reduction 45° (m) | Reduction 90° (m) |
|---|---|---|---|---|---|
| Coaxial Systems | Type 1<br>Type 1 | 4 (Horizontal)<br>10 (Horizontal) | Ø 60/100<br>Ø 80/125 | 0.5<br>0.5 | 1<br>1 |
| | Types 2 & 3 | 4 (Vertical)<br>10 (Vertical) | Ø 60/100<br>Ø 80/125 | 0.5<br>0.5 | 1<br>1 |
| Twin Pipe Systems | Type 4 | 24 (Air Intake & Exhaust Equal Lengths) | Ø 80/80 | 0.25 | 0.5 |
| | Type 5 | 1+48 (Air Intake 1 Metre and Exhaust 48 Metres) | Ø 80/80 | 0.25 | 0.5 |

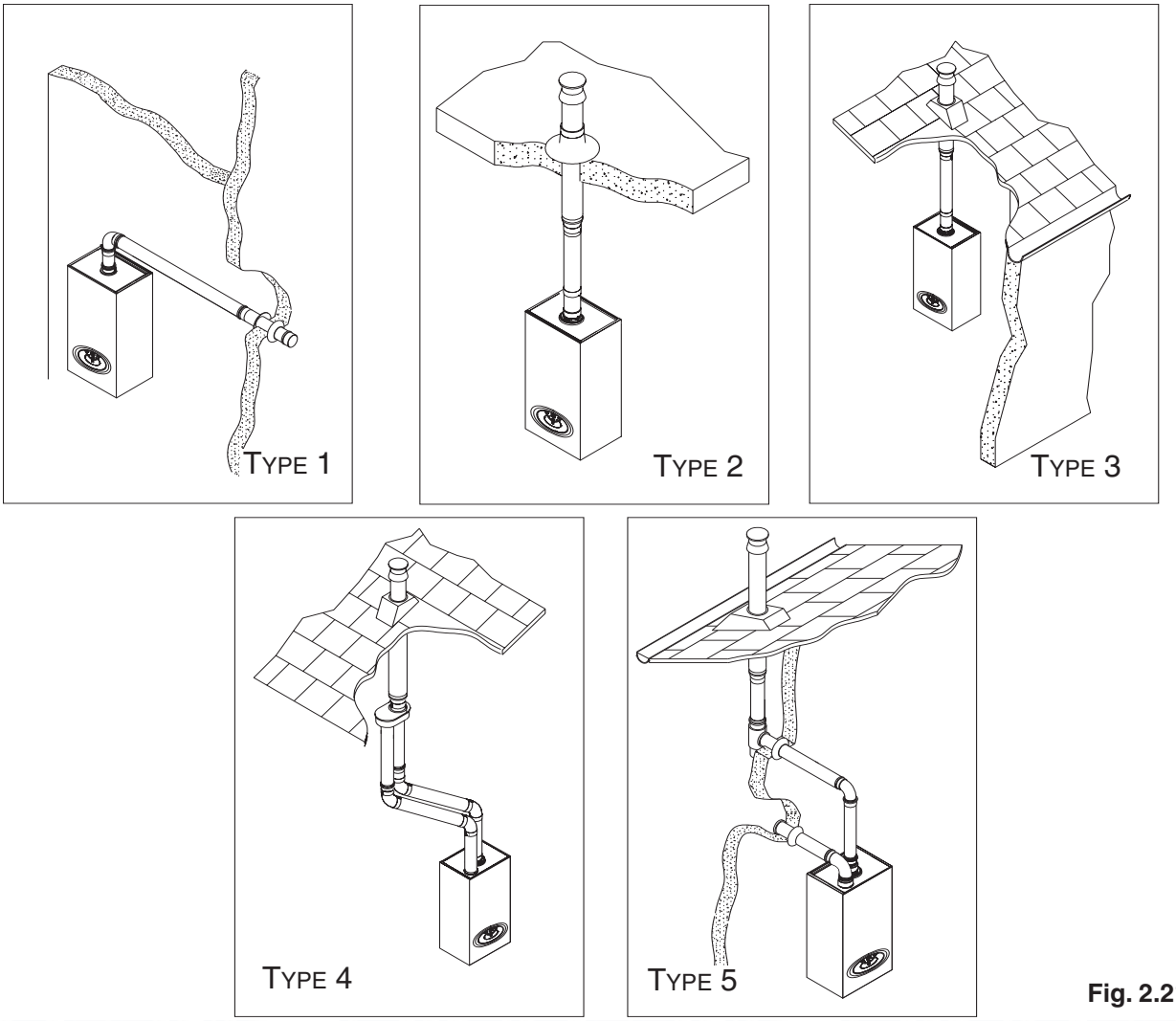


**Fig. 2.21**

**NOTE: DRAWINGS ARE INDICATIVE OF FLUEING OPTIONS ONLY.**

## 2.10. FITTING THE MECHANICAL / DIGITAL CLOCK

The ACO MFFI (Combi) boiler is supplied with a factory fitted mechanical time clock. There is a digital clock available as an optional extra (code: 706348).

To fit the digital clock it is necessary to proceed as follows:-

1. Remove the outer casing
2. Open the control panel (see Section 2.22);
3. Unplug the electrical connection from the PCB and unscrew the four screws (Fig. 2.26);
4. Remove the time clock (Fig. 2.27).
5. Connect the wires supplied with the clock to the digital time clock as shown in Fig. 2.28;
6. Reassemble in reverse order.

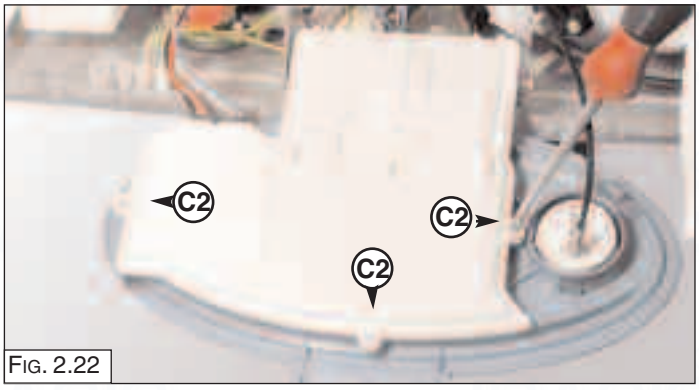


FIG. 2.22

NOTE: THE MECHANICAL CLOCK HAS FOUR WIRES, THEREFORE THE HARNESS WILL REQUIRE CHANGING ALSO.

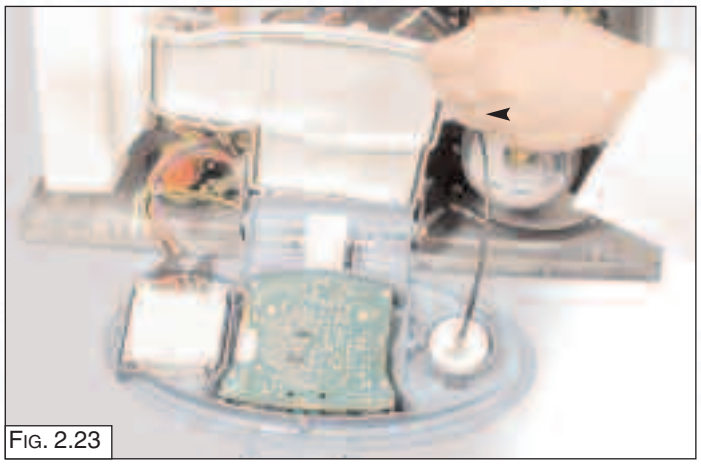

FIG. 2.23

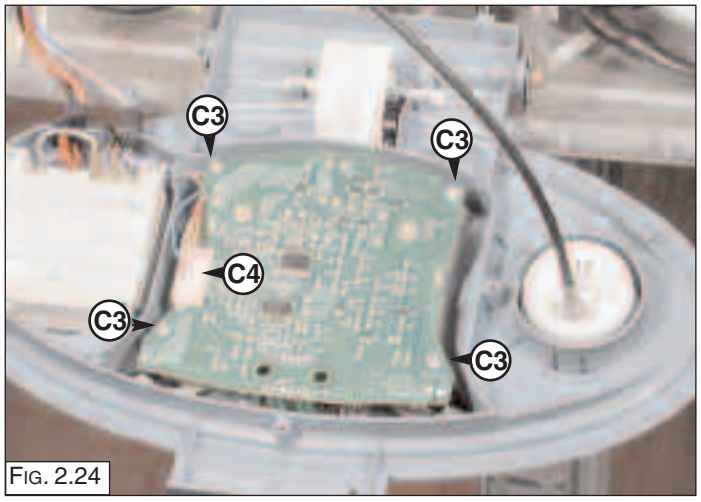


FIG. 2.24

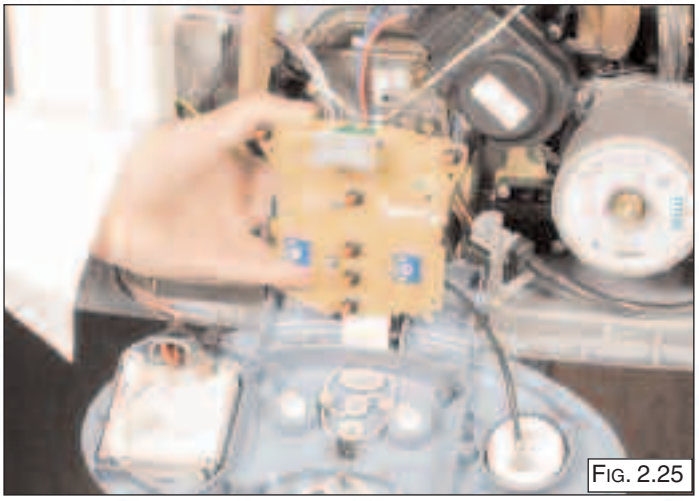

FIG. 2.25

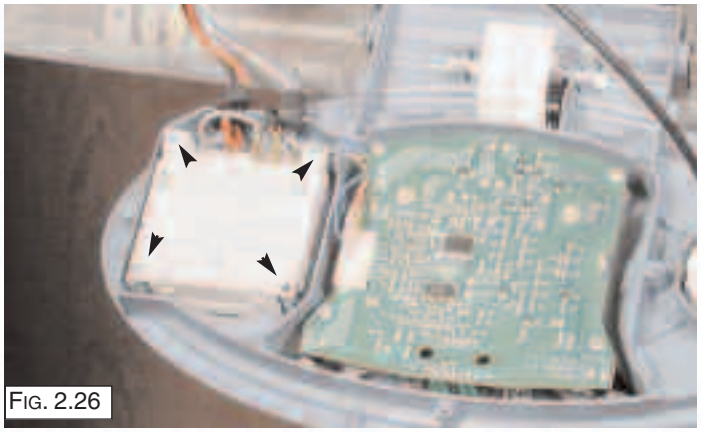

FIG. 2.26

The ACO RFFI (System) boiler is not supplied with a clock, however a mechanical and digital clock is available as an optional extra (mechanical - code: 706349 and digital - code: 706348)

To fit the clock it is necessary to proceed as follows:-

1. Remove the outer casing
2. Open the control panel (see Section 2.22);
3. Unplug the electrical connection from the PCB and unscrew the four screws (Fig. 2.26);
4. Remove the time clock (Fig. 2.27).
5. Connect the wires supplied with the clock to the digital time clock as shown in Fig. 2.28;
6. Reassemble in reverse order.

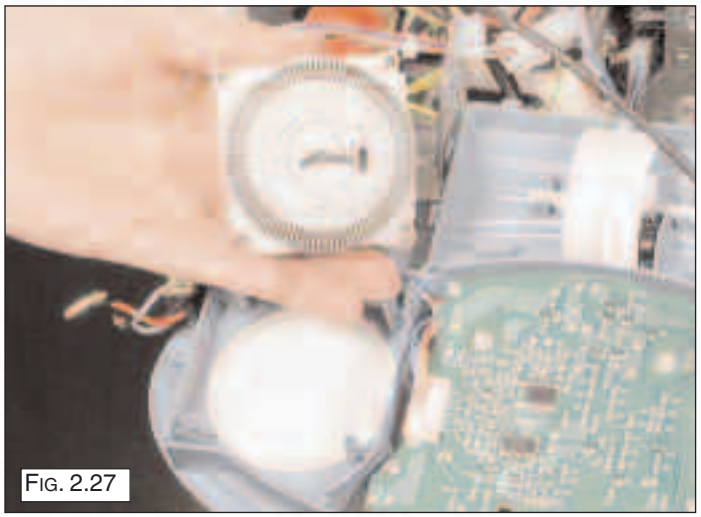

FIG. 2.27

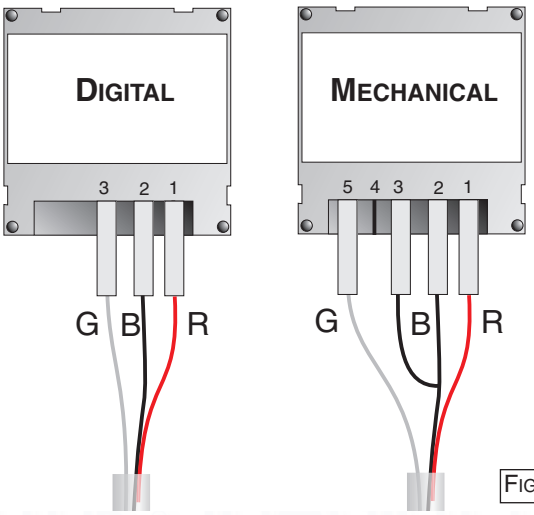


FIG. 2.28

## 2.11. Setting the Mechanical Time Clock

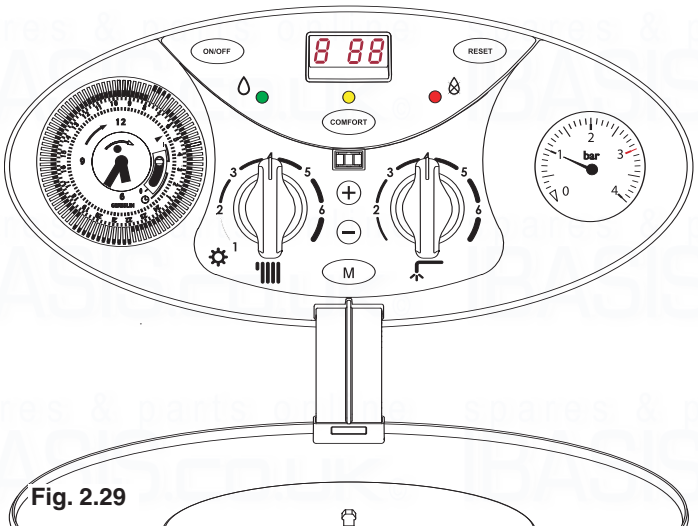


Fig. 2.29

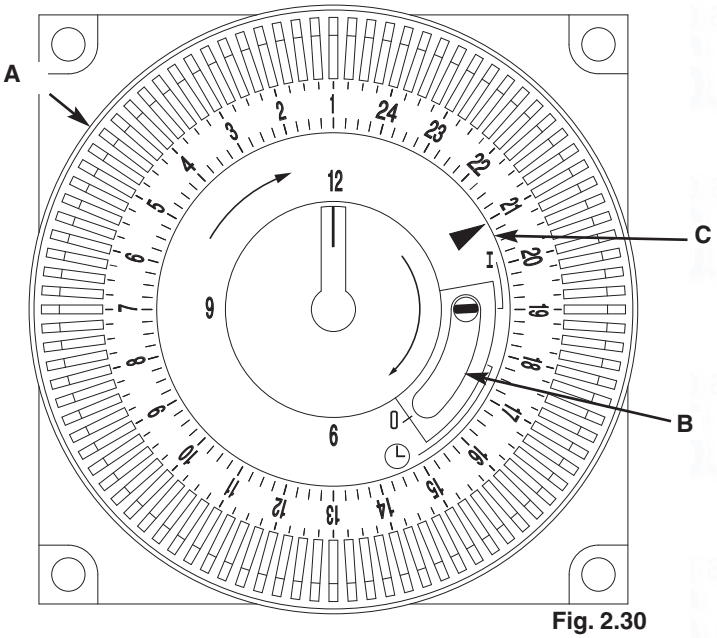


Fig. 2.30

**1. General layout**
The mechanical clock covers a 24 hour period. Each tappet represents 15 minutes **A** (Fig. 2.30). An override switch is located on the clock **B** (Fig 2.30).

**2. To set the time**
To set the time of day, grasp the outer edge of the dial and turn slowly clockwise until the correct time is lined up with the arrow **C** (Fig. 2.30).

**3. To Set the "On" and "Off" times**
The clock uses a 24hours system. e.g. 8 = 8.00 am and 18 = 6.00 pm. "ON" periods are set by sliding all tappets between the "ON" time and the "OFF" time to the outer edge of the dial.The tappets remaining at the centre of the dial are the "OFF" periods.

**4. For operation**
Put the selector switch **B** to the ◷ symbol to control the central heating by the clock. Put the switch **B** to «**I**» to select permanent operation or to «**0**» to turn the central heating off permanently.

## 2.11.1. Setting the DigitalTime Clock

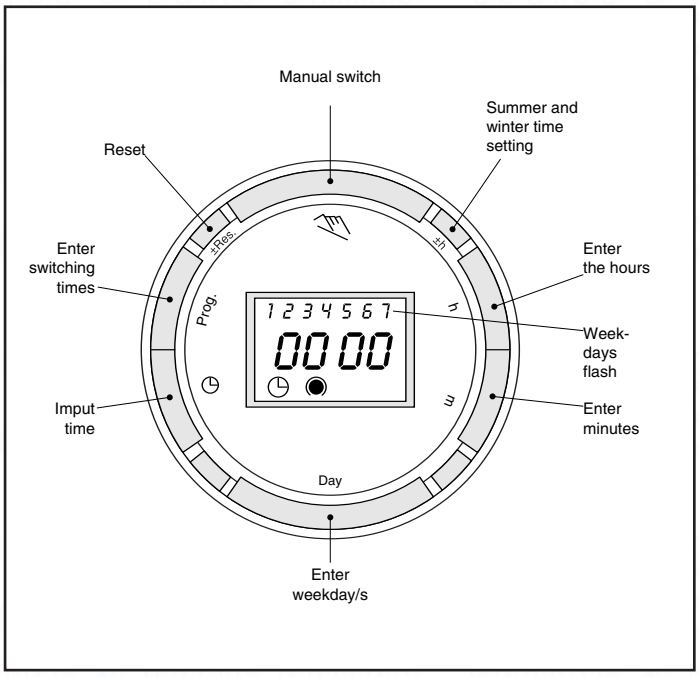


**Operating the time switch**
The steps marked with the symbol "►" are necessary to carry out a switching program.

**Preparing for Operation**

► Activate the "Res" switch (=RESET) to reset the time switch to its default setting (activate using a pencil or similar pointed instrument). Do this:
- every time you wish to "reset" the time switch
- to erase all switching times and the current time of day.

After approximately two seconds the following display appears: "– – : – –".

► **Enter current time and weekday**
- Keep the "◷" key pressed down

During the summer time period press the +/- 1h key once.
Enter the hour using the "h" key
Enter the minutes using the "m" key
Enter the day using the "Day" key
1 = "Monday".....7 = Sunday
- Release the "◷" key.

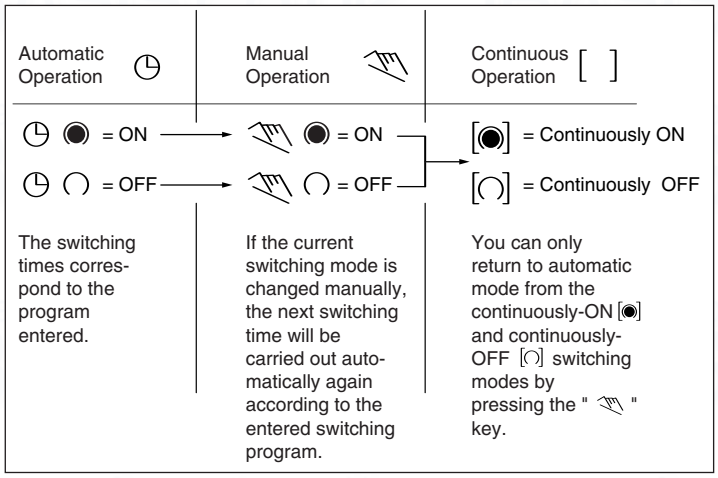


**Entering the switching times**

You have 20 memory locations available. Each switching time takes up one memory location.

Keep pressing the "Prog" key until a free memory location is shown in the display "– –:– –".

Programme ON or OFF with the " " key:

"◯"= OFF; "◉"= ON

Enter the hour using "h"

Enter the minutes using "m"

If a switching command is to be carried out every day (1 2 3 4 5 6 7) then store using the "◷" key, otherwise select the day(s) it is to be carried out by using the "Day" key.

When the day selection is left blank, the programmed switching instruction operates at the same time every day

1 2 3 4 5 6 = Monday – Saturday
1 2 3 4 5 = Monday – Friday
6 7 =Saturday – Sunday

Selection of single days: 1 = Mon. ..... 2 =Tues.

Save the switching time with the "◷" key.

The time switch enters the automatic operating mode and displays the current time of day.

Begin any further entry of a switching time with the "Prog" switch. If your entry is incomplete, the segments not yet selected will blink in the display. After programming is completed, and you return the time clock to the current time display with the "◷" key, the time clock will not activate any switching instruction required for the current time. You may need to manually select the desired switching state with the " " key. Thereafter, as the unit encounters further switching instructions in the memory in real time, it will correctly activate all subsequent switching instructions.

**Manual Override Switch " "**

With the " " you can change the current setting at any time. The switching program already entered is not altered.

**Reading the programmed switching times**

Pressing the "Prog" key displays the programmed switching times until the first free memory location appears in the display "– – : – –".

If you now press the "Prog" key once again, the number of free memory locations will be displayed, e.g. "**18**". If all memory locations are occupied, the display "**00**" appears.

**Changing the programmed switching times**

Press the "Prog" key repeatedly until the switching time you want to change is displayed. You can now enter the new data. See point "**Entering the switching times**".

**Notes on storing switching times:**

If you end your entry of the switching times by pressing the "Prog" key, then the switching time you have entered will be stored and the next memory location displayed.

In addition, a complete switching command is stored **automatically** after around 90 seconds provided **no other** key is pressed. The time switch then enters the automatic operating mode and displays the current time again.

**Deleting individual switching times**

Press the "Prog" key repeatedly until the switching time you wish to delete is shown in the display. Then set to "– –" using the "h" or "m" key and keep the "◷" key pressed down for around 3 seconds. The switching time is now erased and the current time is displayed.

**AM / PM time display**

If you press the "+/-1h" and "h" keys at the same time, the time display switches into the AM/PM mode.

## 2.12. Accessory Connection

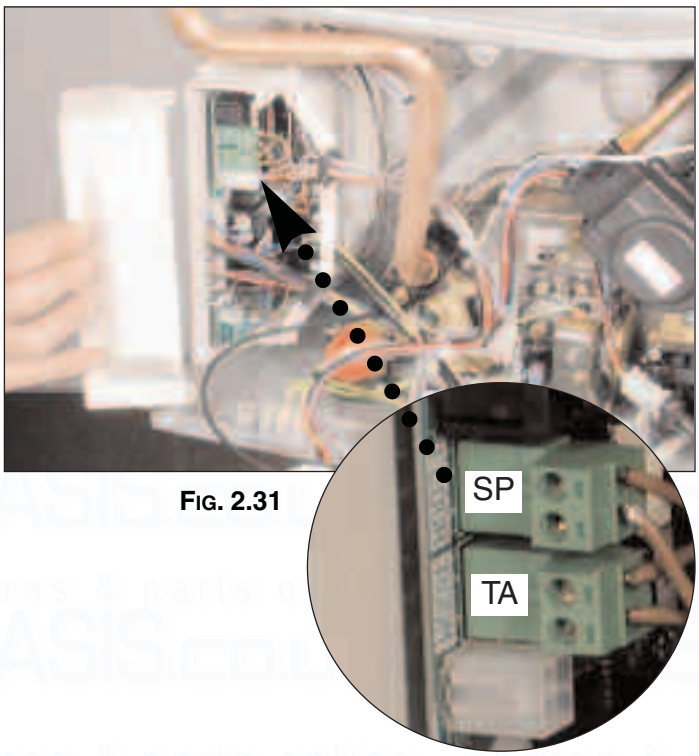


Fig. 2.31

**IMPORTANT!!**
Only remove the links from SP and TA if they are to be connected to external controls.

**IMPORTANT!!**
**Before carrying out any repairs to the appliance always ensure that the external power supply has been isolated. The boiler will remain live even when the ON/OFF knob is in the "O"(off) position.**

In order to gain access to the external control connections, it is first necessary to remove the casing (as shown in Section 3.2) then proceed as follows:

1. Remove the cover of the main PCB box **(Fig 2.31)**.
2. Access can now be gained to the following connectors (see Section 2.13):
   CN10 - Safety thermostat for underfloor heating **(SP)**
   CN 9 - Room Thermostat **(TA)**
   CN 11 - Time clock
   CN 6 - Interface PCB (Fig. 2.33)

CONNECTION OF ROOM THERMOSTAT OR EXTERNAL TIME CLOCK

a. - Insert the thermostat cable through the cable grommet and fasten it by means of the cable-clamp provided.

b. - Connect the thermostat wires to the terminal block CN9 **(Fig. 2.32 - Diagram A).**

c.- If a remote time clock is to be fitted, supply 240V from the same spur as the boiler for the clock motor supply, disconnect the integral time clock from the P.C.B. CN11

d. - Using a volt-free switching time clock, connect the switching wires from the time clock following points A-C above **(Fig. 2.32 - Diagram B).**

e. - If using an external time clock and room thermostat, these must be connected in series as points A-D above **(Fig. 2.32 - Diagram C).**

**Note: Ensure low voltage and high voltage circuits are cabled separately to avoid induced voltages in the low voltage circuits.**

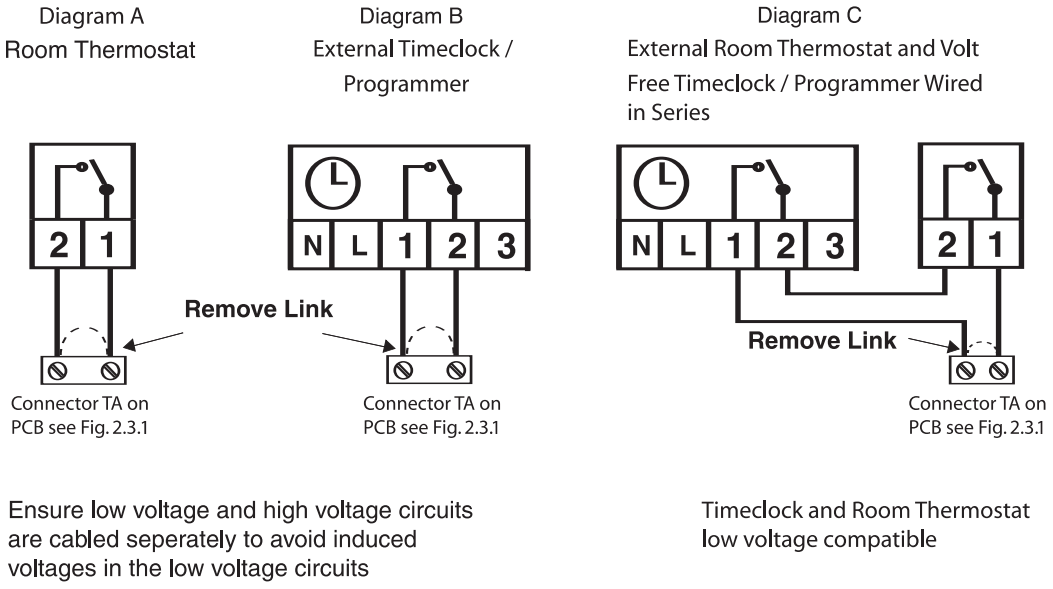


Fig. 2.32

## FITTING THE EXTERNAL SENSOR

The external sensor is supplied with the interface PCB (Fig. 2.33).

The external sensor should be sited no more than 50 m from the boiler and on an external north facing wall, between 2 and 2.5 metres above the ground. It should also be ensured that the external sensor is positioned out of direct sunlight.

To connect the external sensor, plug the interface PCB into connector **CN6** on the main PCB (see Fig. 2.33).

To connect between the interface PCB and the external sensor, it will be necessary to use 2x 0.5mm$^2$ cable, connected to the two terminals on the external sensor and to Terminal B (Fig. 2.33) on the interface PCB.

Instructions on the activation and setting of the outdoor sensor are detailed on pages 41 and 42.

Parameter P activates the external sensor, Parameter P6 modifies the thermal curve and Parameter P6 selects the specific thermal curve for the type of system installed.

**NOTE: WHEN USING THE ACO BOILERS TO HEAT AN INDIRECT CYLINDER, DO NOT USE THE EXTERNAL SENSOR AS THIS WILL AFFECT THE RECOVERY TIME OF THE CYLINDER.**

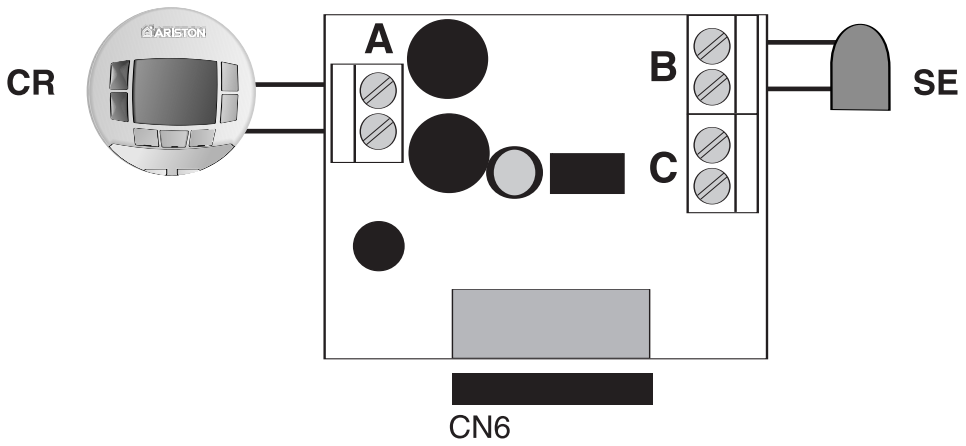


**FIG. 2.33**

## 2.13. Electrical Diagram

The P.C.B. is fitted with 2 fuses, on the live and the neutral.
The fuse holder contains:
- 5 x 20mm “3.15A Slow” glass fuses

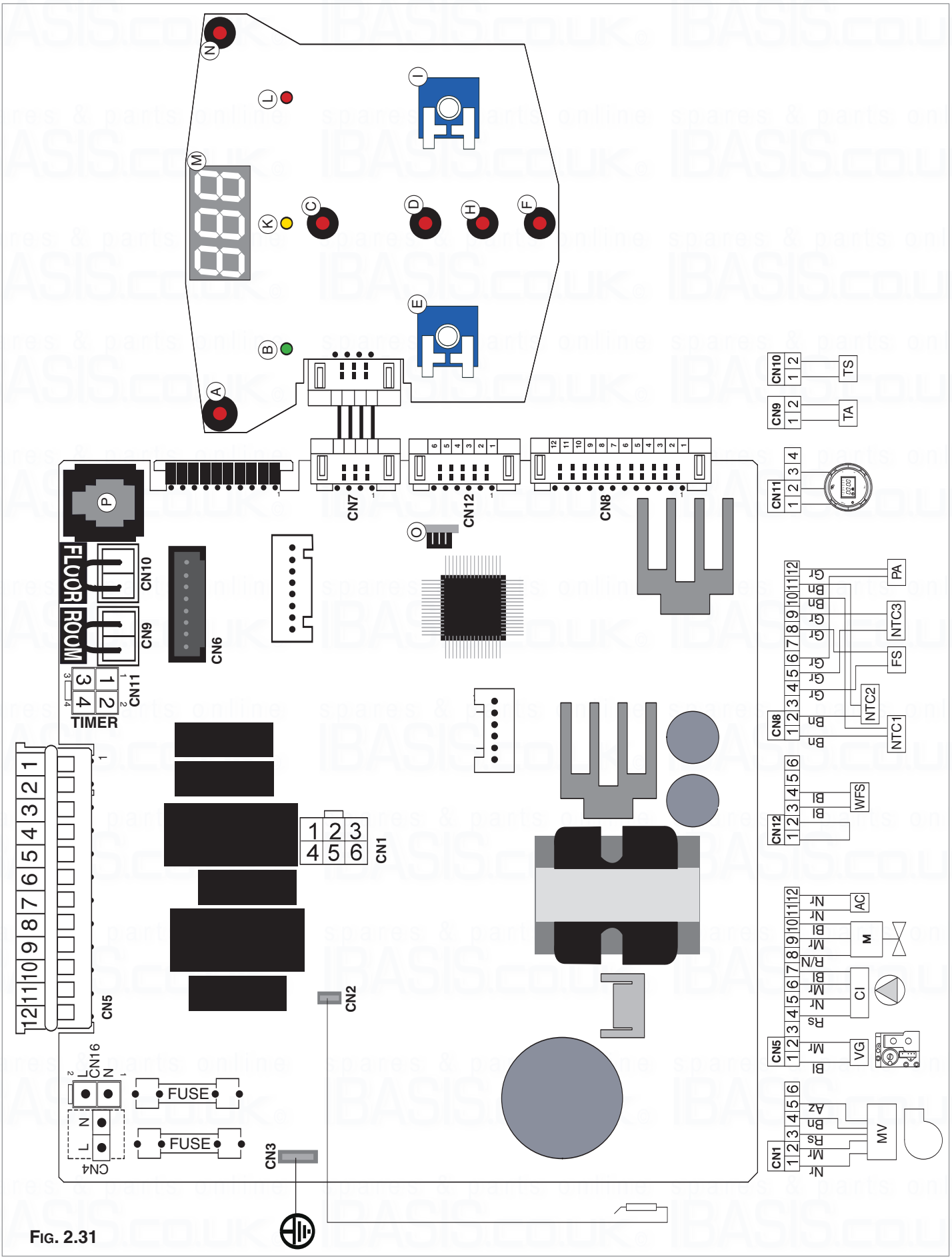


Fig. 2.31

Legend:

**A** - ON/OFF button
**B** - Green LED (Indicates burner on)
**C** - COMFORT button
**D** - Programming key +
**E** - Central Heating temperature adjustment
**F** - Menu button
**H** - Programming key -
**I** - Domestic Hot Water temperature adjustment (MFFI only)
**K** - Comfort function LED (yellow) (MFFI only)
**L** - Red LED (indicates lockout)
**M** - Multifunction display
**N** - Reset button
**O** - EEPROM key
**P** - Interface PCB (optional)

**FS** - Domestic hot water flow switch
**NTC1** - Central Heating flow temperature probe
**NTC2** - Central Heating return temperature probe
**NTC3** - Domestic Hot Water temperature probe (mod. 27/32 MFFI)
- Connection for boiler thermostat (mod. 27/32 RFFI SYSTEM)
**OP** - Time clock
**VG** - Gas valve
**M** - Diverter valve (mod. 27/32 MFFI)
**CI** - Circulation pump with automatic air release valve
**MV** - Fan
**AC** - Spark generator
**PA** - Air pressure switch
**TA** - Room Thermostat (optional)
**TS** - Underfloor Heating Safety Thermostat (optional)
**CR*** - Remote Control (optional)
**SE*** - External sensor (optional)

*** NOT SHOWN**

**CN1 = FAN**
1: Start of coil (black)
2: End of coil (brown)
3: "Hall" sensor power supply 12V (red)
4: "Hall" sensor input (white)
5: "Hall" sensor neutral (blue)
6: Not used

**CN2 = FLAME SENSOR**

**CN3 = Earth**

**CN4 = *POWER SUPPLY***
1: Live (brown)
2: Neutral (blue)

**CN5 = *EQUIPMENT CONNECTIONS***
1: Gas valve neutral (blue)
2: Gas valve live (brown)
3: Not used
4: Pump (V1) live (red)
5: Pump (V2) live (black)
6: Pump (ON/OFF) live (brown)
7: Pump neutral (blue)
8: 3-way valve (C.H.) (red/black)
9: 3-way valve (D.H.W.)(brown)
10: 3-way valve Neutral (blue)
11: Spark generator Neutral (black)
12: Spark generator live (black)

**CN6 = INTERFACE PCB (OPTIONAL - see Section 2.12)**
Accessories:
External sensor
Remote Control CLIMA MANAGER
Secondary outlet (**see Section. 2.12**)

**CN7 = DISPLAY**
1: Power 5V
2: Display return
3: Display transmission
4: Earth

**CN8 = SENSOR CONNECTOR**
1: Central Heating flow sensor (white)
2: Central Heating return sensor (white)
3: Not used
4: DHW flow switch (grey)
5: DHW sensor (grey)
6: Air pressure switch (grey)
7: Not used
8: DHW flow switch earth (grey)
9: DHW sensor earth (grey)
10: C.H. flow sensor earth (white)
11: C.H. return sensor earth (white)
12: Air pressure switch (grey)

**CN9 = ROOM THERMOSTAT (OPTIONAL - see Section 2.12)**

**CN10 = UNDERFLOOR HEATING SAFETY THERMOSTAT (OPTIONAL - Section 2.12)**

**CN11 = TIME CLOCK (see Section 2.12)**

## 2.14. Water Circuit Diagram

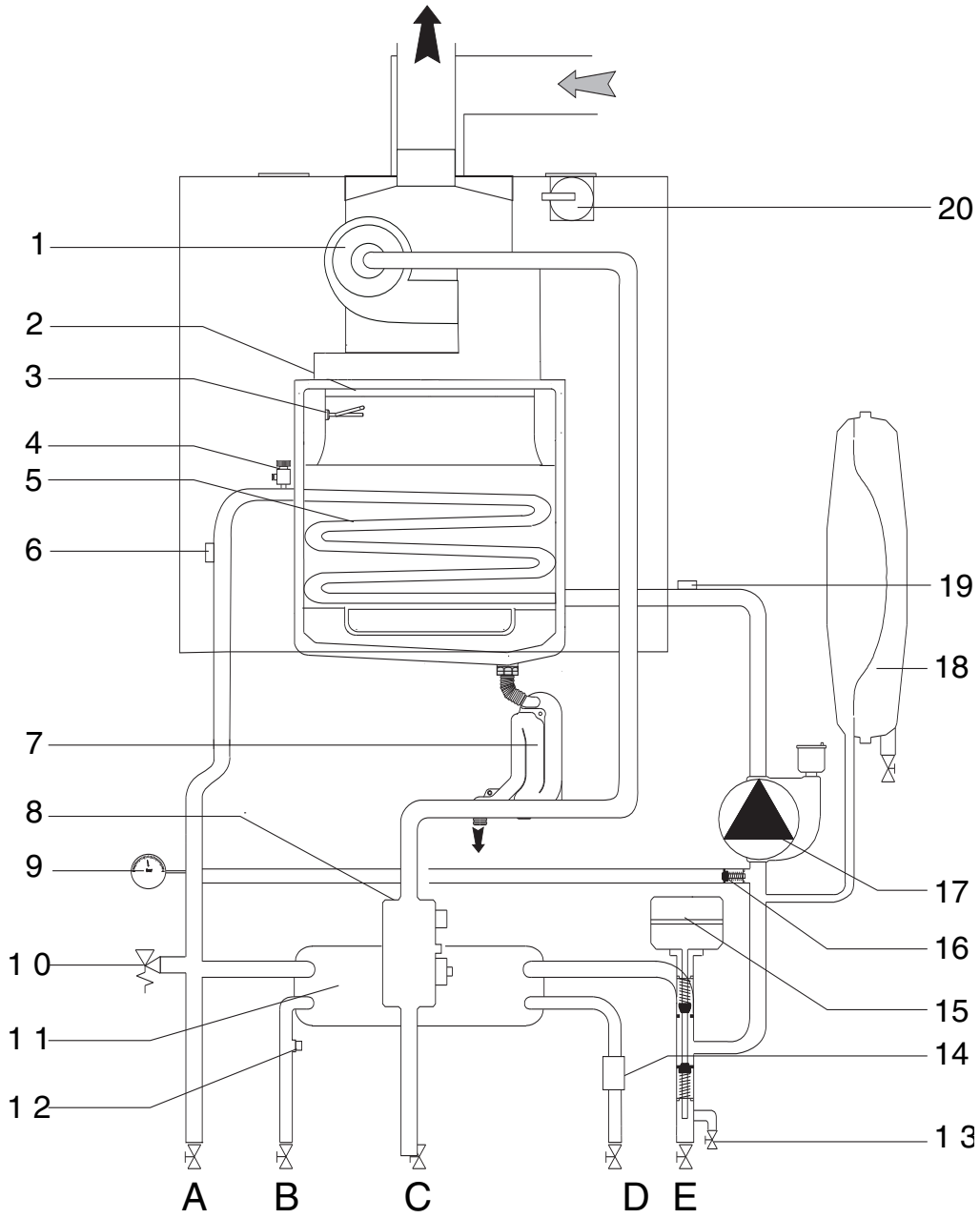


Fig. 2.32

***Legend:***

1 - Fan
2 - Burner
3 - Ignition/detection electrode
4 - Air release valve
5 - Main heat exchanger
6 - Central heating flow temperature probe
7 - Condensate Trap
8 - Gas valve
9 - Pressure gauge
10 - Safety valve
11 - Secondary heat exchanger
12 - Domestic hot water temperature probe
13 - Drain valve
14 - Domestic hot water flow switch
15 - Motorised valve
16 - Automatic By-pass
17 - Circulation pump with automatic air release valve
18 - Expansion vessel
19 - Central heating return temperature probe
20 - Air pressure switch

A - Central Heating Flow
B - DHW Outlet
C - Gas Inlet
D - Cold Water Inlet
E - Central Heating Return

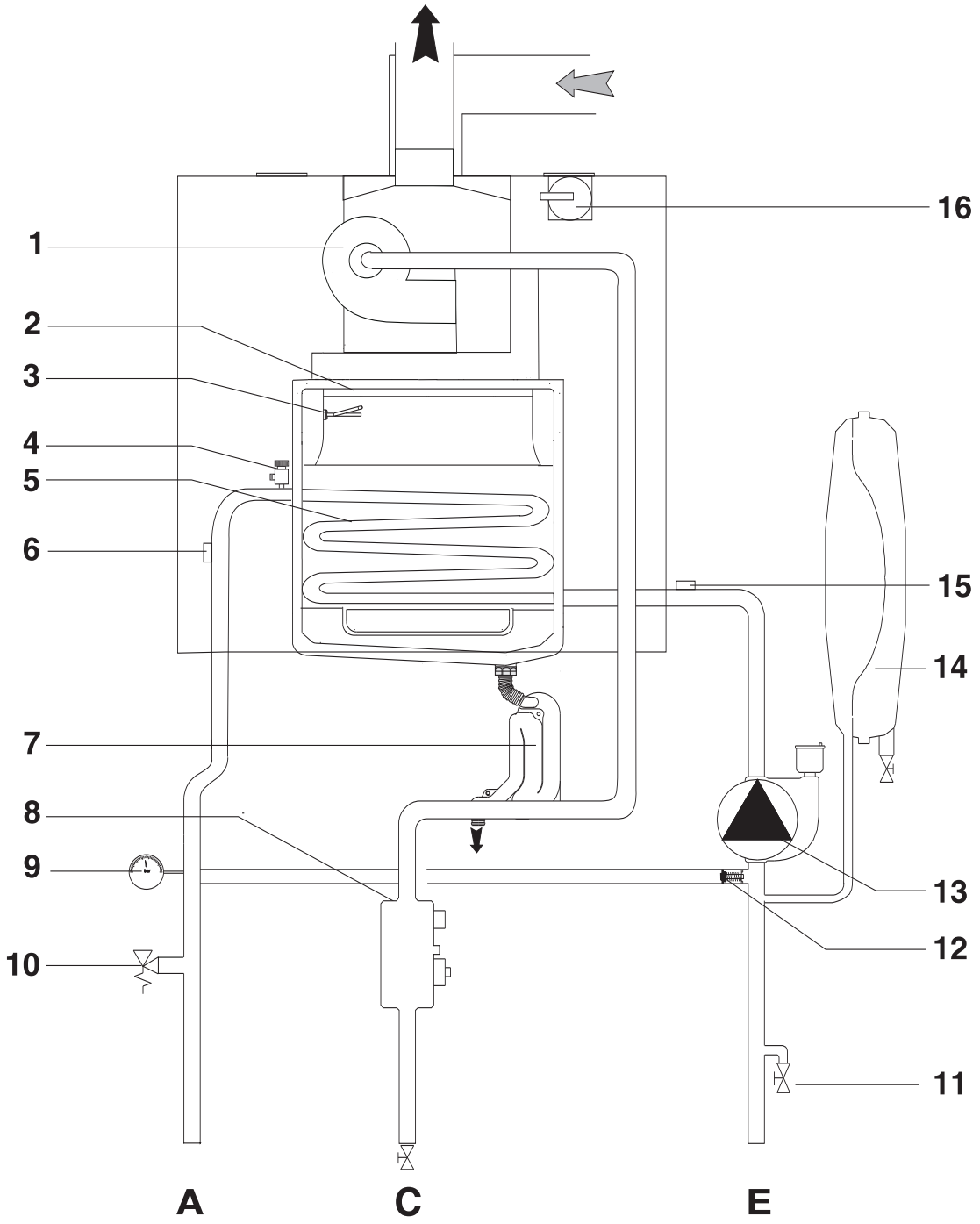


**FIG. 2.33**

***LEGEND:***

1 - Fan
2 - Burner
3 - Ignition/detection electrode
4 - Air release valve
5 - Main heat exchanger
6 - Central heating flow temperature probe
7 - Condensate Trap
8 - Gas valve
9 - Pressure gauge
10 - Safety valve
11 - Drain valve
12 - Automatic By-pass
13 - Circulation pump with automatic air release valve
14 - Expansion vessel
15 - Central heating return temperature probe
16 - Air pressure switch

A - Central Heating Flow
C - Gas Inlet
E - Central Heating Return

# 3. COMMISSIONING

## 3.1. INITIAL PREPARATION

MTS (GB) Limited support the benchmark initiative. In Sections 11 and 12 of this manual you will find the benchmark commissioning checklist (page 78) and the service interval record (Page 79), It is important the benchmark commissioning checklist is completed in the presence of your customer, they are shown how to use it, and it is signed by them. Please instruct your customer that they must have this manual with them whenever they contact a service engineer or us.
Preliminary electrical system checks to ensure electrical safety must be carried out by a competent person i.e. polarity, earth continuity, resistance to earth and short circuit.

*FILLING THE HEATING SYSTEM:*

Remove the case and lower the control panel (see section 3.2. for further information).
Open the central heating flow and return cocks supplied with the connection kit.
Unscrew the cap on the automatic air release valve one full turn and leave open permanently.
Close all air release valves on the central heating system.
Gradually open valve(s) at the filling point (filling-loop) connection to the central heating system until water is heard to flow, do not open fully.
Open each air release tap starting with the lowest point and close it only when clear water, free of air, is visible.
**Purge the air from the pump by unscrewing the pump plug and also manually rotate the pump shaft in the direction indicated by the pump label to ensure the pump is free.**

FIG. 3.1A

**IMPORTANT!!**
**OPEN THE MANUAL AIR VENT AND ENSURE THAT THE PRIMARY EXCHANGER IS FREE OF AIR. (See FIG. 3.1A)**

Close the pump plug.
Continue filling the system until at least 1 bar registers on the pressure gauge.
Inspect the system for water soundness and remedy any leaks discovered.

*FILLING OF THE D.H.W. SYSTEM:*

Close all hot water draw-off taps.
Open the cold water inlet cock supplied with the connection kit.
Open slowly each draw-off tap and close it only when clear water, free of bubbles, is visible

*GAS SUPPLY:*

Inspect the entire installation including the gas meter, test for soundness and purge, all as described in BS 6891:1988.
Open the gas cock (supplied with the connection kit) to the appliance and check the gas connector on the appliance for leaks.

### *Water Treatment*

The boiler is equipped with an aluminium alloy main heat exchanger.
The detailed recommendations for water treatment are given in BS 7593:1992 (Treatment of water in domestic hot water central heating systems); the following notes are given for general guidance:

- If the boiler is installed in an existing system, any unsuitable additives must be removed;
- Under no circumstances should the boiler be fired before the system has been thoroughly flushed; the flushing procedure must be in line with BS7593:1992.
  Firstly fill the central heating system and boiler with the power

off and flush through cold, fill the central heating system again, add a flushing detergent, we highly recommend the use of a flushing detergent appropriate for the metals used in the aluminium alloy circuit. These include (Fernox Superfloc, BetzDearborn Sentinel X300 or X400), whose function is to dissolve any foreign matter that may be in the system, and run the boiler on central heating until it reaches its operating temperature, flush the system as instructed by the manufacturer of the flushing detergent and refill the system with a suitable corrosion inhibitor such as Fernox Copal MB-1, or BetzDeaborn Sentinel X100 is recommended.

**NOTE: FAILURE TO CARRY OUT THE FLUSHING PROCEDURE WILL RESULT IN THE WARRANTY BECOMING VOID.**

In hard water areas or where large quantities of water are in the system the treatment of the water to prevent premature scaling of the main heat exchanger is necessary.

The formation of scale strongly compromises the efficiency of the thermic exchange because small areas of scale cause a high increase of the temperature of the metallic walls and therefore add to the thermal stress of the heat exchanger.
Demineralised water is more aggressive so in this situation it is necessary to treat the water with an appropriate corrosion inhibitor.

- Any treatment of water by additives in the system for frost protection or for corrosion inhibition has to be absolutely suitable for all the metals used in the circuit including the aluminium alloys.

- If anti-freeze substances are to be used in the system, check carefully that they are compatible with the aluminium.
  In particular, DO NOT USE ordinary ETHYLENE GLYCOL, since it is corrosive in relation to aluminium and its alloy, as well as being toxic.
  MTS suggests the use of suitable anti-freeze products such as Fernox ALPHI 11, which will prevent rust and incrustation taking place.
  Periodically check the pH of the water/anti-freeze mixture of the boiler circuit and replace it when the amount measured is out of the range stipulated by the manufacturer ( 7 < pH < 8).
  DO NOT MIX DIFFERENT TYPES OF ANTI-FREEZE
- In under-floor systems, the use of plastic pipes without protection against penetration of oxygen through the walls can cause corrosion of the system's metal parts (metal piping, boiler, etc), through the formation of oxides and bacterial agents.
  To prevent this problem, it is necessary to use pipes with an "oxygen-proof barrier", in accordance with standards DIN 4726/4729. **If pipes of this kind are not used, keep the system separate by installing heat exchanger*s of those with a specific system water treatment.***

***IMPORTANT***
***Failure to carry out the water treatment procedure will invalidate the appliance warranty***

## 3.2. Removing the Casing

To remove the front casing panel, follow these steps:

1. Remove the screws “A” **(Fig 3.1)**;
2. Remove the four screws from case hooks (two at the top and two at the bottom) and rotate anti-clockwise **(Fig 3.2)**;
3. Lift and unhook the case panel **(Fig 3.3)**.

**Fig. 3.1**

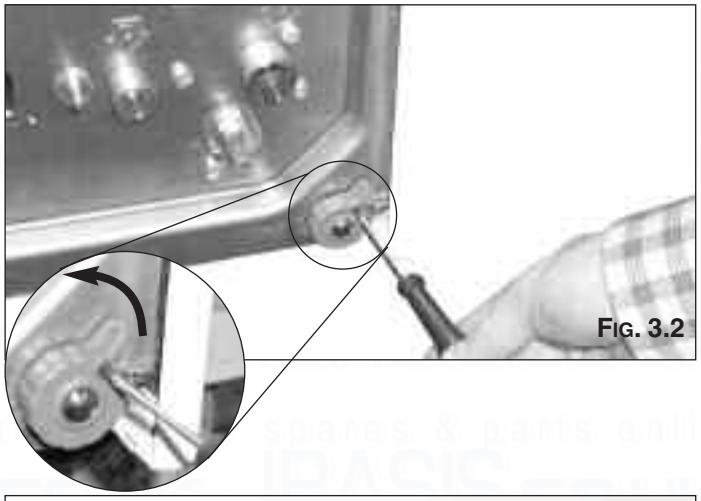

**Fig. 3.2**

**Fig. 3.3**

## 3.3. Control Panel

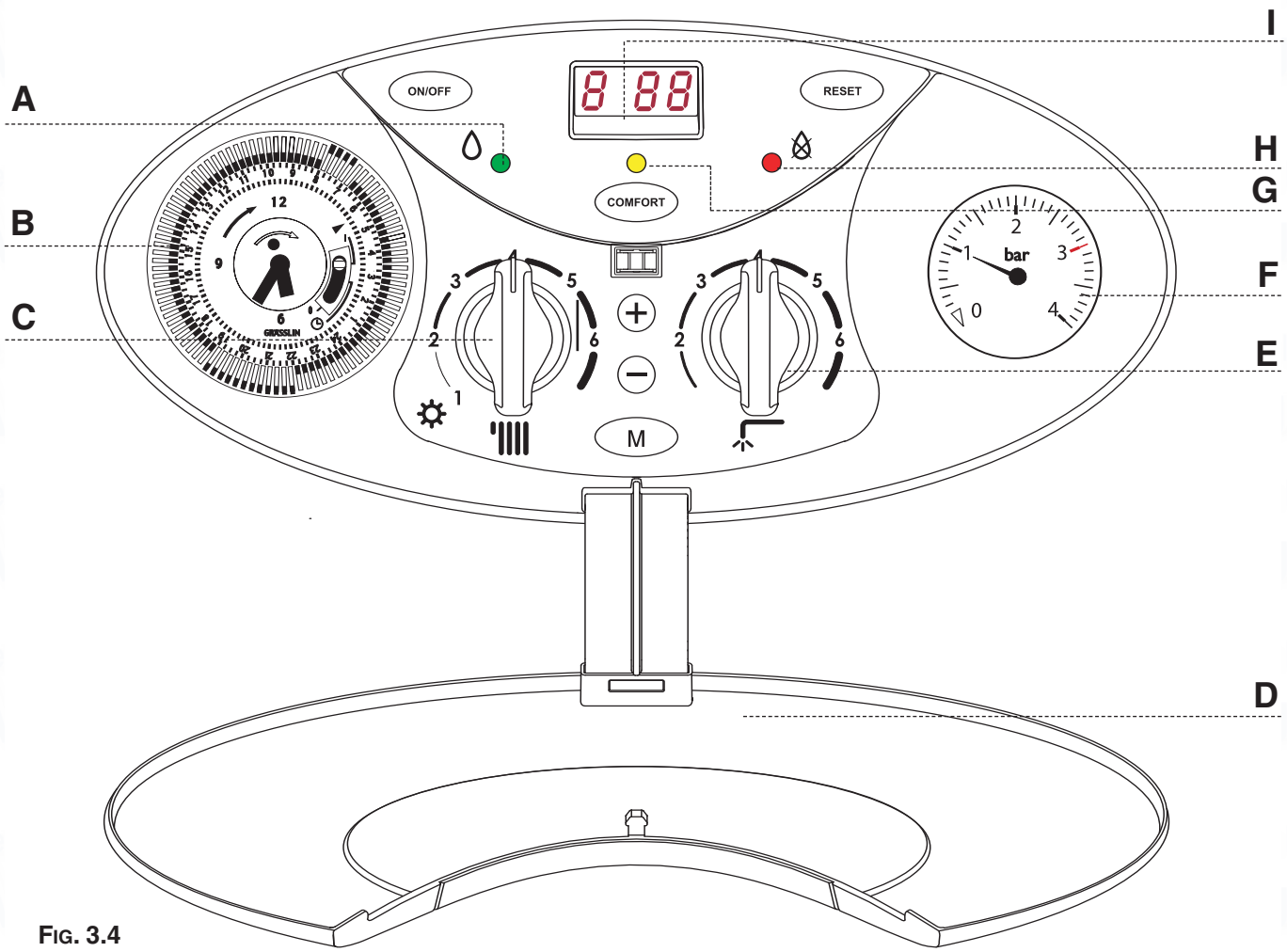


Fig. 3.4

| Button | Description |
|---|---|
| ON/OFF | ON/OFF Switch |
| COMFORT | "COMFORT" Function Push-button |
| RESET | Reset Button/<br>Flue Test**/ scroll through Functions Menu |
| M | Menu Switch |
| + | Programming "+" key |
| − | Programming "-" key |

| | Description |
|---|---|
| A | Green LED<br>(illuminated = burner on) |
| B | Time clock |
| C | Selector knob for Summer/Winter<br>Central Heating Temperature Adjustment Knob |
| D | Control Panel Cover |
| E | Domestic Hot Water Temperature Adjustment Knob |
| F | Heating System Pressure Gauge |
| G | "COMFORT" Function L.E.D |
| H | Red LED<br>(illuminated = boiler lockout) |
| I | Multi-function Display |

***** IMPORTANT!!***
***The Flue Test function will cause the boiler to run continuously on maximum power. This function must only be activated by an authorised engineer.***

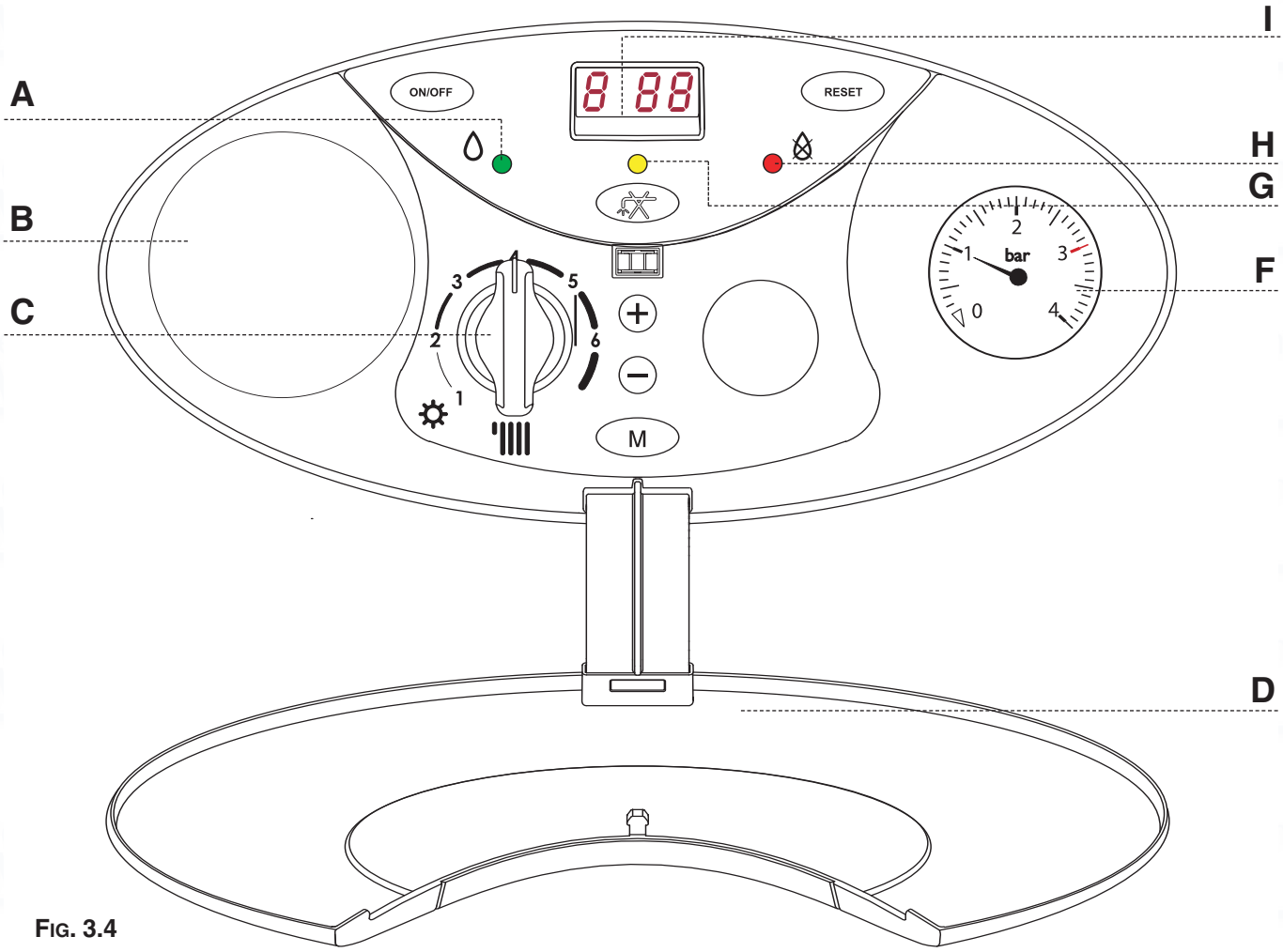


FIG. 3.4

| Button | Description |
|---|---|
| ON/OFF | ON/OFF Switch |
| | Not used |
| RESET | Reset Button/<br>Flue Test**/ scroll through Functions Menu |
| M | Menu Switch |
| + | Programming "+" key |
| − | Programming "-" key |

| | Description |
|---|---|
| A | Green LED<br>(illuminated = burner on) |
| B | Time clock (Optional Extra) |
| C | Central Heating Temperature Adjustment Knob |
| D | Control Panel Cover |
| F | Heating System Pressure Gauge |
| G | Heating only L.E.D |
| H | Red LED<br>(illuminated = boiler lockout) |
| I | Multi-function Display |

***** IMPORTANT!!***
***The Flue Test function will cause the boiler to run continuously on maximum power. This function must only be activated by an authorised engineer.***

## 3.4. INITIAL START-UP

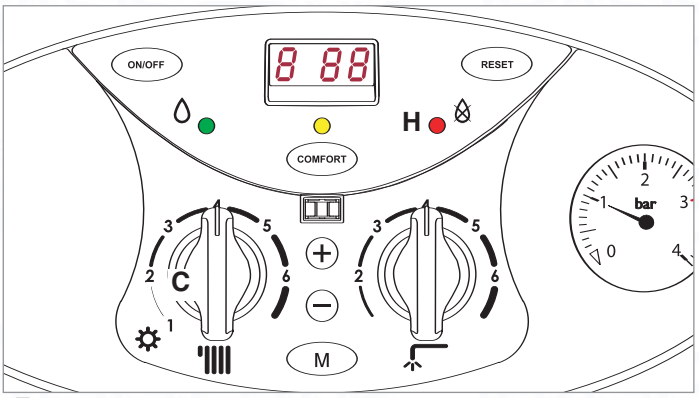


FIG. 3.5

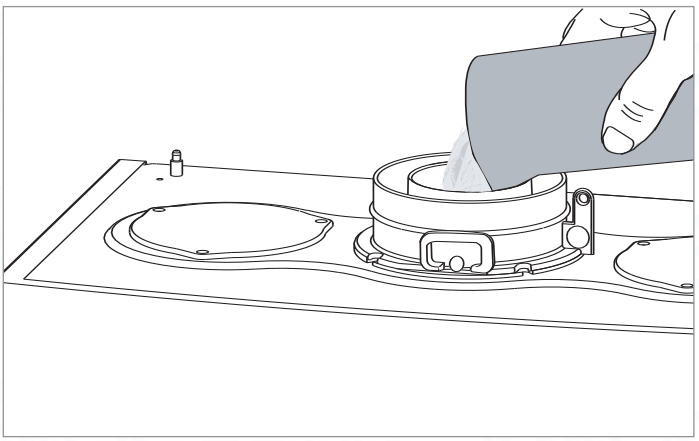

FIG. 3.6

1. Make sure that:
- the cap of the automatic air release valve is loosened;
- the system pressure is at least 1 bar on the pressure gauge "F" (Fig. 3.4);
- the gas cock is closed (Fig. 3.7);
- the electrical connection has been carried out in the correct manner.

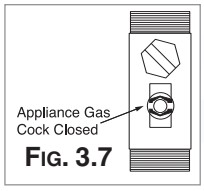


FIG. 3.7

To allow the air to escape from the system, proceed as follows:
- push the On/off button (ON/OFF) and turn the knob "C" (Fig. 3.5) to the "winter" position. The boiler pump will start up and three consecutive attempts will be made to ignite the burner. After the third attempt, the electronic system will shutdown the boiler, because the supply of gas has been cut off. The message "A01" will appear on the display and the red LED "H" will illuminate;
- let the pump operate until all the air has escaped from the system;
- repeat the procedure for bleeding the radiators of air;
- draw hot water for a short while;
- check the system pressure and, if it has gone down, fill it with water until it returns to 1 bar.

2. **Fill the boiler condensate trap with water, by pouring 1/2 a litre of water into the exhaust flue connector (see Section 2.9 Connecting the Flue).**
**N.B. In the event of a prolonged period of system shutdown, the condensate trap should be filled before any renewed use. A shortage of water in the trap could temporarily lead to a small leakage of fumes into the air.**

3, Ensure that the flue is fitted correctly.

4. Turn on the gas cock (Fig. 3.8) and check the seals on the connections, including the one for the burner, making sure that the meter does not signal the passage of gas. Check the connections with a soap solution and eliminate any leaks.

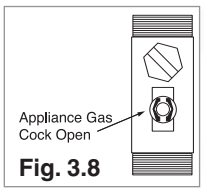


Fig. 3.8

5. Press the reset button (RESET), the boiler will attempt to light.
If the burner does not light the first time, repeat the procedure.
Note: Should the boiler fail to ignite check that no air is present in the gas pipe.
**The boiler is configured in the factory for the gas type in question. To check the $CO_2$ setting, please refer to Section 3.6.3.**

6. Run the appliance in the DHW mode and check the correct operation of the thermostat control.

7. Complete the benchmark commissioning checklist.

## 3.5. Display: Messages Shown During Normal Operation

During operation of the boiler, while it is carrying out its normal operations, the left-hand display shows a series of characters that refer to the operations indicated below:

| | |
|---|---|
| 0 | No request for heat |
| C | Heating |
| c | Pump overrun for heating |
| d | Domestic hot water |
| h | Pump overrun for domestic hot water |

The right-hand display (two-digit) shows:
- in CENTRAL HEATING mode: temperature of the Central Heating system flow;
- in DOMESTIC HOT WATER mode: temperature of the Domestic Hot Water (MFFI only).

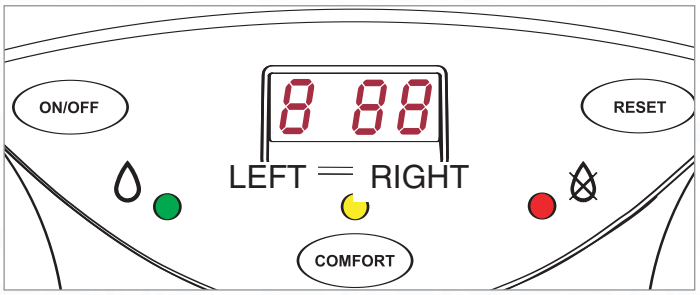


Fig. 3.9

## 3.6. Operating Parameters

The boiler has been designed to allow easy use of the operating parameters.

### 3.6.1 Regulation Menu Table

Summary of the functions accessed when the RESET button (RESET) and the menu button (M) are pushed at the same time for 5 seconds.

On the display will appear the parameters indicated on table 3A.

To switch between the different parameters press the (M) button.

To modify the parameters push the programming keys (−) and (+).

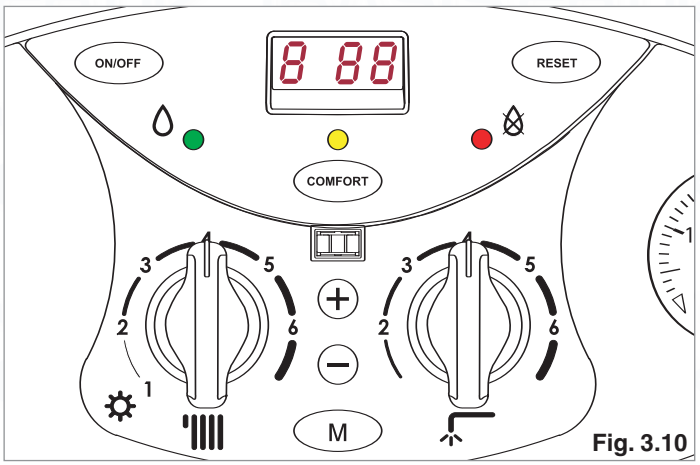

Fig. 3.10

| left display | right display | function | factory setting |
|---|---|---|---|
| 1 | from 0 to 99 | Soft light<br>as % of maximum Heating Power (NG) | 60 (ACO 27 MFFI - RFFI )<br>43 (ACO 32 MFFI - RFFI) |
| 2 | from 0 to 99 | Maximum Heating Power (%) | 55 (ACO 27 MFFI - RFFI SYSTEM)<br>52 (ACO 32 MFFI - RFFI SYSTEM) |
| 3 | from 0 to 7 | Ignition delay (minutes) | 02 |
| 4 | | Central heating minimum temperature | 46 |
| 5 | | Central heating maximum temperature | 82 |
| 6 | | PDT rpm (Check of the temperature difference between the flow and return sensors for twelve seconds on initial start-up - **Do Not Adjust**) | 45 |
| t | from 50 to 51 | NOT USED | 50 |
| F | from 00 to 02 | Boiler types | 00 - ACO 27 /32 MFFI (COMBI)<br>02 - ACO 27/32 RFFI (SYSTEM) |
| E | from 00 to 03 | Secondary outlet function | 00 |
| P | from 01 to 15 or C0 | Pump overrun (Central Heating - mins) | 02 |
| C | from 00 to 01 | Comfort function *(only model MFFI)* | 01 |
| P | from U0 to U1 | Pump speed adjustment (modulating or single speed) | U1 |

Table. 3A

| left-hand display | right-hand display | Function | factory setting |
|---|---|---|---|
| r | from 00 to 01 | selects low temperature systems or standard systems | 01 **Standard**<br>00 **Low Temperature** |
| P | from 90 to 91 | Temperature regulation controlled by external sensor | 90 |
| P6 | from -20 to +20 | Correction of heat curve translation | |
| P5 | from 0_3 to 3_0 | Curve incline | |
| t | | Test Function | |
| A | 81 | Bus Address (Do not modify) | |
| b0 | | Set-point second heating zone | |
| b1 | | GSM value (Do not modify) | |
| b | 20 | NOT USED | |
| b | 30 | NOT USED | |
| b | 40 | NOT USED | |
| b | 50 | NOT USED | |
| b | 60 | NOT USED | |
| b | 70 | NOT USED | |

**Important!!**
**The parameters P5 and P6 are only enabled when the outdoor sensor is activated (Parameter P - page 41).**

To return to the normal display, press the menu button (M).

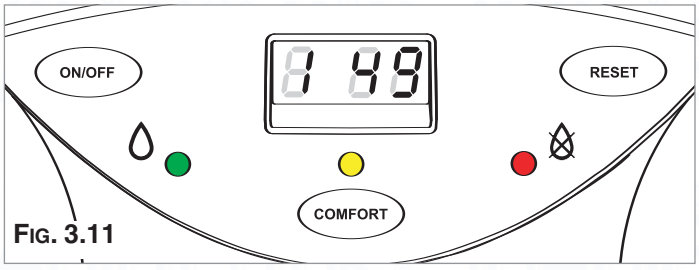

FIG. 3.11

**Soft Light adjustment** 1

The soft light can be adjusted between the maximum power (shown on the display as “00”, i.e. 100%) and the minimum power (shown on the display as “01”, i.e. 1%). The boiler is factory set to a value which is suitable for the ignition with any type of gas.
The value set expressed as a percentage, can be displayed and adjusted as indicated in Section 3.6.1 (parameter 1)

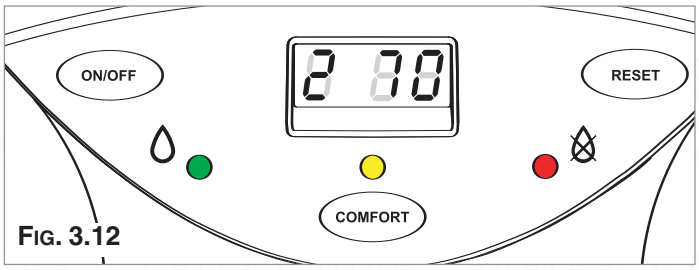

FIG. 3.12

## Maximum Heating Power adjustment 2

The maximum heating power can be adjusted between the maximum power allowed by the boiler (22.5kW - ACO 27 and 28kW - ACO 32) and the minimum recommended power (10kW - ACO 27 and 13kW - ACO 32) indicated in the graph below (Parameter 2 = 20%). The value is factory set to 70% of the maximum power.
The value set (expressed as a percentage) can be displayed and modified as illustrated in Section 3.6.1 (parameter 2).
The display shows the value between 100% ("00" on the display) and 1% ("01").

Use the graph below as a guide to set the boiler heating power to suit the system load.

**NOTE: MTS RECOMMEND THAT THE MINIMUM POWER NOT BE SET BELOW 20% AS INDICATED IN THE GRAPH BELOW..**

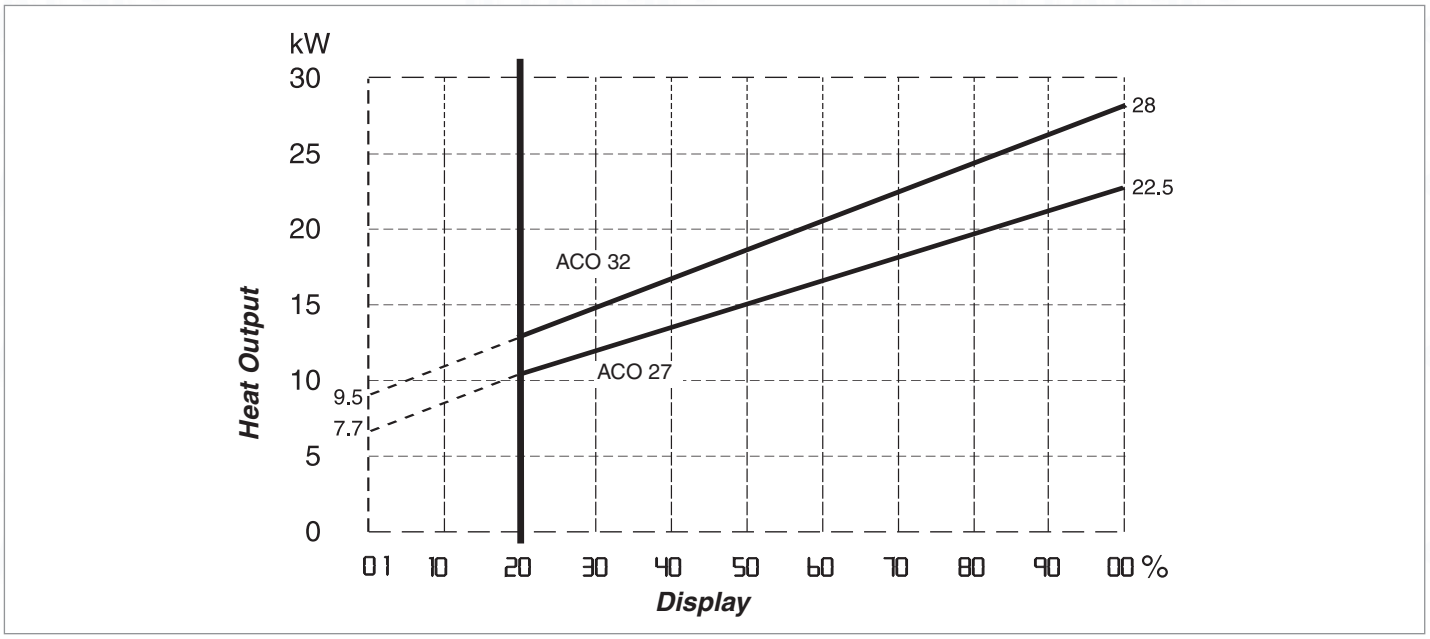


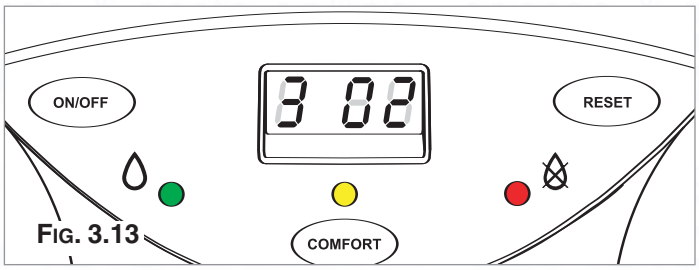

FIG. 3.13

## Ignition Delay adjustment 3

The re-ignition delay for Central Heating can be adjusted to between 0 and 7 minutes. The delay is factory set to 2 minutes.
The value set can be displayed and modified as illustrated in Section 3.6.1 (parameter 3)

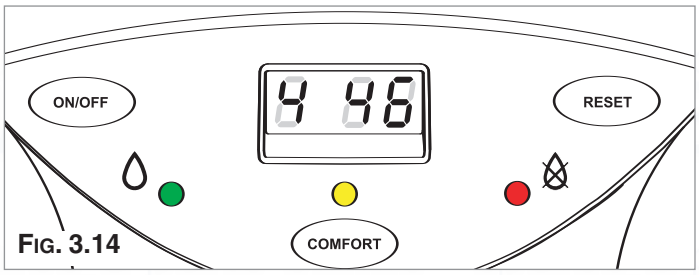

FIG. 3.14

## Minimum Central Heating temperature 4

This parameter allows the setting of the minimum temperature for the central heating circuit. The value is factory set at 46°C and can be adjusted as illustrated in Section 3.6.1 (parameter 4).

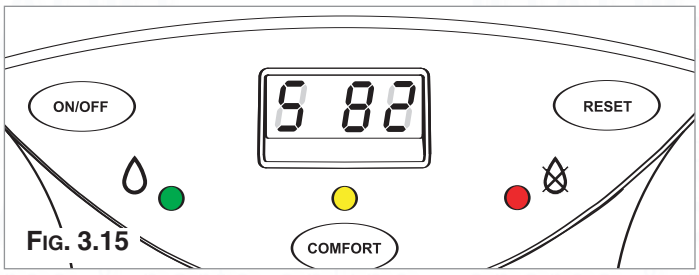

FIG. 3.15

## Maximum Central Heating temperature 5

This parameter allows the setting of the maximum temperature for the central heating circuit. The value is factory set at 82°C and can be adjusted as illustrated in Section 3.6.1 (parameter 5).

## Boiler types F

Factory setting:
00 - **ACO 27 / 32 MFFI (COMBI)**
02 - **ACO 27 / 32 RFFI (SYSTEM)**
**THIS PARAMETER MUST NEVER BE ADJUSTED.**

## Secondary outlet Function E
## (This parameter can be modified only with the interface PCB connected)

With the interface PCB connected, it is possible to set the boiler to operate with one of the following accessories, (see Section 2.12 for further information). The setting can be varied by pushing the ⊕ and ⊖ keys, the following options are available:

| | |
|---|---|
| 00 | zone valve - *factory setting* - **(NOT USED IN UK)** |
| 01 | NOT USED |
| 02 | NOT USED |
| 03 | NOT USED |

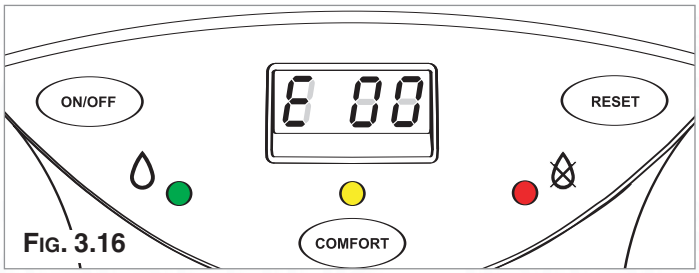

FIG. 3.16

## PUMP OVERRUN P

The pump overrun time may be adjusted (after the burner has been turned off) by pressing the programming keys ⊕ and ⊖.
The following modes are available:

| | |
|---|---|
| 01 | 1 minute of pump overrun |
| 03 | 3 minutes of pump overrun - factory setting |
| 06 | 6 minutes of pump overrun |
| 09 | 9 minutes of pump overrun |
| 12 | 12 minutes of pump overrun |
| 15 | 15 minutes of pump overrun |
| C0 | Continuous pump overrun **(NOT RECOMMENDED)** |

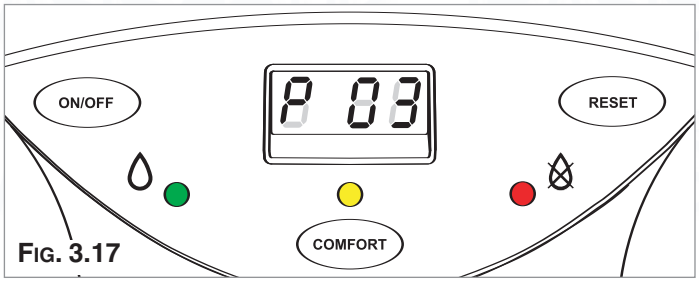

FIG. 3.17

## Comfort Function (MFFI model - Combi only) C

The boiler allows the convenience level to be increased in the output of domestic hot water by means of the "COMFORT" function. This function keeps the secondary exchanger warm during the periods in which the boiler is inactive, thereby allowing the initial water drawn to be at a higher temperature.
The function may be activated by pressing the **COMFORT button** key on the control panel (see section 3.3.). When the function is active, a yellow light **"G"** comes on, again located on the control panel.
The comfort function can be activated or deactivated by pressing the ⊕ and ⊖ keys

00 Comfort function deactivated
01 Comfort function active for 30 minutes - factory setting.

It is possible to deactivate the comfort function by pressing the button COMFORT.
The yellow LED **"G"** will go out.

**NOTE:** During the overrun period of the pump, the "COMFORT" function, if selected, is temporarily deactivated. The L.E.D. light remains on to indicate that the boiler will return to the "COMFORT" mode once the pump overrun has finished.

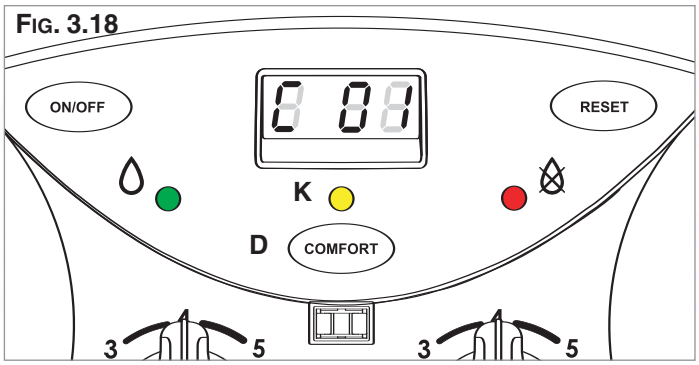

FIG. 3.18

## Pump Speed Adjustment P

By pressing the ⊕ and ⊖ keys it is possible to adust the operation of the pump, the two options are as follows:

U0 - Single Speed Pump
U1 - Modulating Pump - *factory setting*

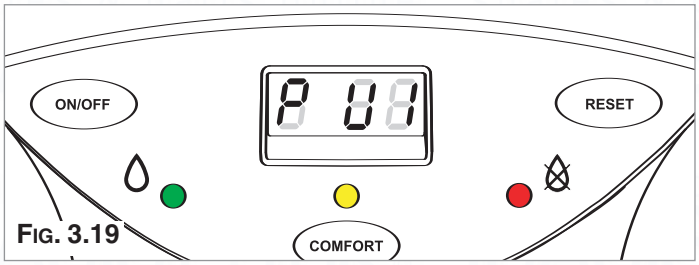

FIG. 3.19

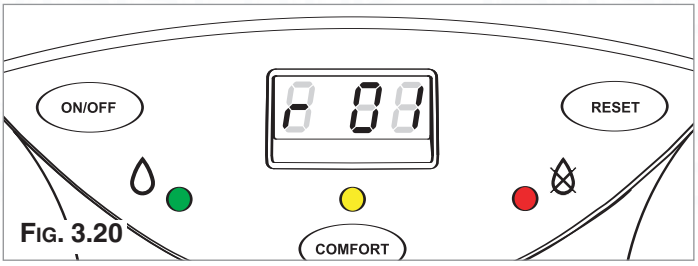

FIG. 3.20

## SETTING THE TEMPERATURE FIELD r

Using the programming keys ⊕ and ⊖ it is possible to make the following adjustments:

"00" signifies that the flow temperature (which may be set by means of the knob on the front control panel) may be regulated from 20 to 75°C.
"01" signifies that the flow temperature (which also may be set by means of the knob on the front control panel) may be regulated from 46 to 82 °C.

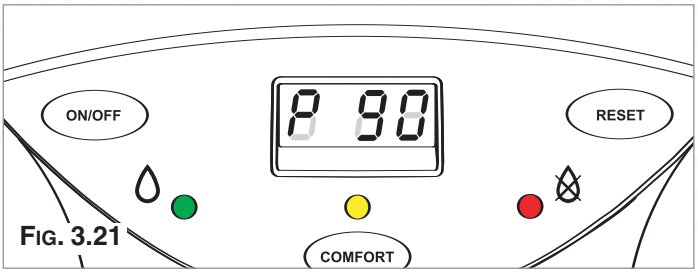

FIG. 3.21

## TEMPERATURE REGULATION CONTROLLED BY THE EXTERNAL SENSOR P

By pressing the ⊕ and ⊖ it is possible to make the following adjustments:

"90" Temperature regulation controlled by the external sensor is inactive (not installed).
"91" Temperature regulation controlled by the external sensor is active (installed).

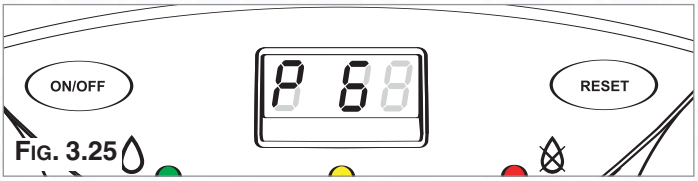

FIG. 3.25

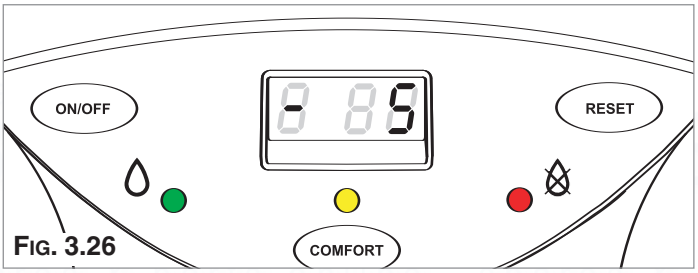

FIG. 3.26

## ADAPTING THE HEAT CURVE "P 6"

**(Only enabled when the outdoor sensor is activated)**

Should the external sensor be fitted it will be necessary to set the heating curve (see page 41) and may be necessary to adjust the parallel shift depending on the performance of the heating system used.

If the temperature in the house is too high, it will be necessary to decrease the parallel shift, whereas if the temperature is too low it will be necessary to increase the parallel shift as described below.

To set up the external sensor proceed as follows;

1. Access the settings menu by pressing the RESET and M buttons for five seconds;
2. Press the M button 5 times to access Parameter 6
3. P 6 will now appear in the left hand display
4. Adjust the parallel shift by turning the heating control knob clockwise to increase or anti-clockwise to decrease as shown below. The shift value can be read on the right hand display, from -20 to +20 (Fig. 3.26).

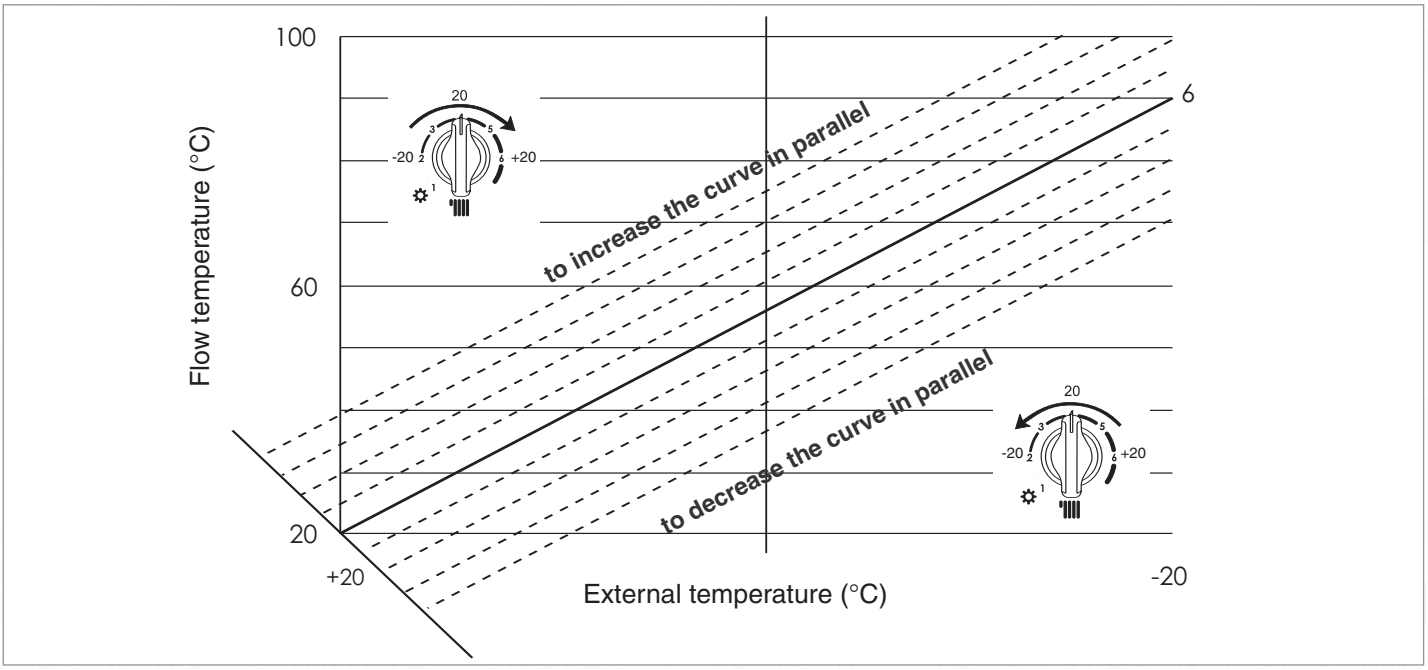

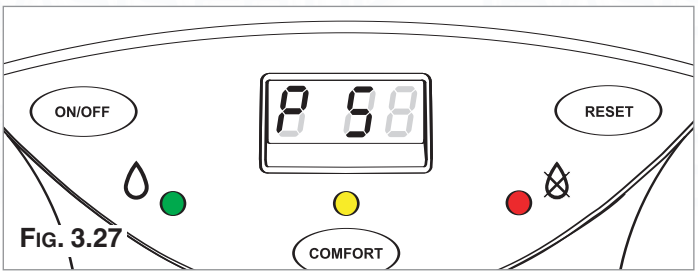

FIG. 3.27

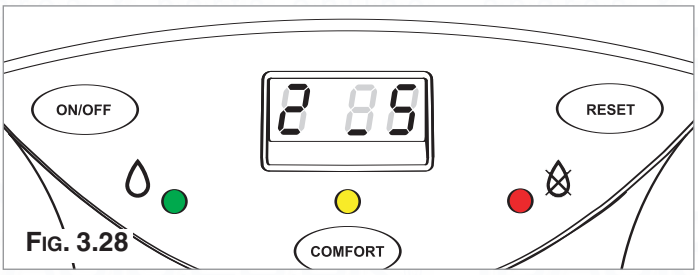

FIG. 3.28

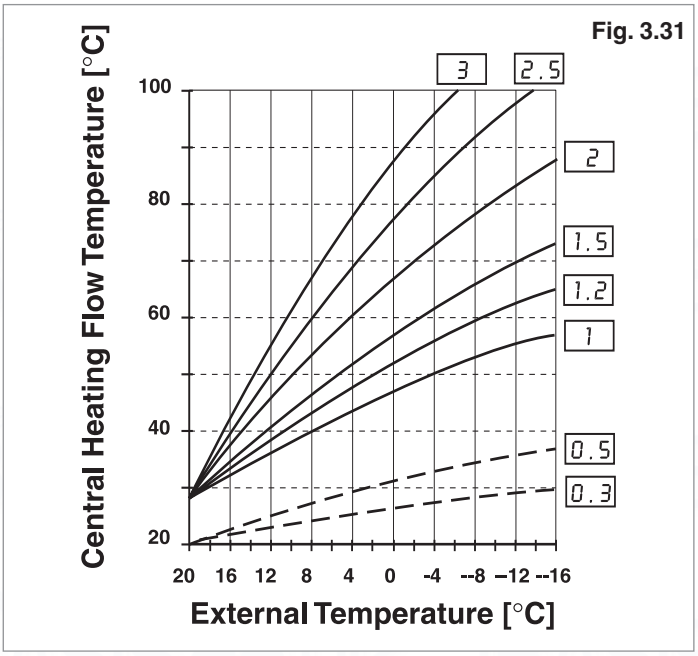

Fig. 3.31

## SETTING THE CURVE INCLINE P 5

**(Only enabled when an outdoor sensor is installed)**

When using an outdoor sensor, the microprocessor-controlled P.C.B. calculates the most suitable flow temperature, taking into account the external temperature and the type of system. The microprocessor is capable of doing this because it is possible to establish a link between the external temperature and the flow temperature of the Central Heating system water. This link translates into a "thermal curve".

The type of curve should be chosen in correspondence with the planned temperature of the system and the nature of the heat loss present in the building.

To select the type of curve access the Setting Menu by pressing the RESET and M buttons for 5 seconds and proceed as follows;

1. Press the M button four times to access Parameter 5;
2. P 5 will be shown on the left hand display;
3. Choose the curve required for the system from Fig. 3.31 and select by pressing the + and − buttons.

With parameter P 5 it is necessary to adjust the heat curve to one of those shown in Fig. 3.31. By using the programming keys + and −, the curve may be changed to select the required curve for the system.

The curves that can be selected are as follows:-

| | |
|---|---|
| Convector radiator | Curve 2.5 to 3 |
| Steel radiator | Curve 1.5 to 2 |
| Oversized steel radiator | Curve 1 to 1.2 |
| Under-floor heating | Curve 0.3 to 0.5(*) |

**WARNING**
**(*) - If curve 0_3 or 0_5 is selected, a system safety thermostat must be connected to the main terminal board (see paragraph 2.12)**

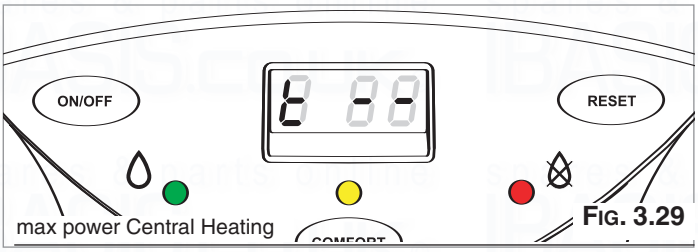

FIG. 3.29

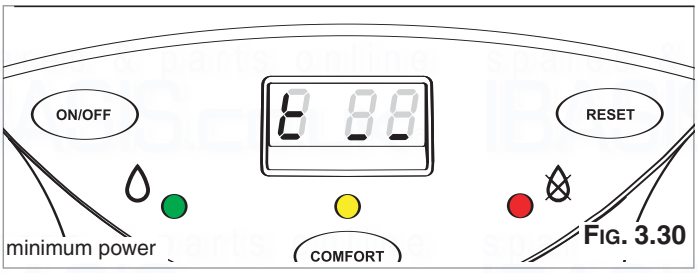

FIG. 3.30

## Test Function †

The test function is used to enable the engineer/installer to check the combustion rate (see Section 3.6.3).

The P.C.B. allows the boiler to be forced to the maximum or minimum power. Enable the test function, two dashes will appear on the right-hand display (see Fig. 3.29).

To select operation at maximum power, press the programming key +, two dashes will appear at the top of the right-hand display (see Fig. 3.30).

This function is disabled when you press reset key to quit the adjustments menu.

To select operation at minimum power, press the programming key −, two dashes will appear at the bottom of the right-hand display (see Fig. 3.30). This function is disabled when you press reset key **"H"** to quit the adjustments menu.

**Note**: The boiler can be forced to the maximum and minimum power even without enabling the test function via the adjustments menu:

a - by pressing the Reset key for 5 seconds, the boiler is automatically forced to test mode and t-- will be displayed, the boiler is now in the test mode for the maximum heating power, to force the boiler to maximum output for hot water it is necessary

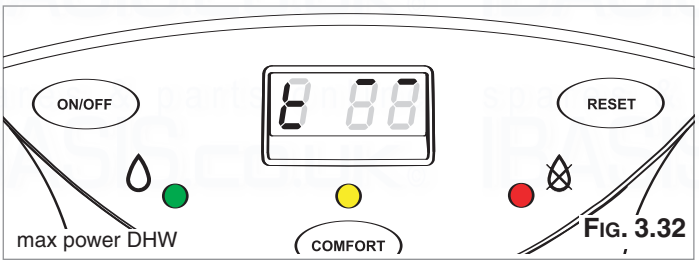

FIG. 3.32

to press the ⊕ and ⊖ keys together, two dashes appear at the top of the right-hand display (see Fig. 3.29). This function is disabled by pressing the reset key .

b - by pressing the ⊖ key, the boiler is forced to operate at minimum power, two dashes appear at the bottom of the right-hand display (Fig. 3.31). This function is disabled by pressing the reset key.

### 3.6.2 SETTINGS DISPLAY

The boiler is designed to monitor some operating variables and settings by means of the display on the front control panel. Keeping, at the same time, the reset and the menu key pressed for over 10 seconds will allow access to the "readout" function of the main system variables. By pressing the reset button repeatedly after that, it is possible to read the following information in sequence:

| *Indication on the left-hand display* | *Value read on right-hand display* |
|---|---|
| U/1 | *Flow temperature of the Central Heating circuit (°C)* |
| U/2 | *Return temperature of the Central Heating circuit (°C)* |
| U/3 | *Domestic Hot Water output temperature (°C)* |
| U/4 | *Outdoor temperature (°C)** |
| U/6 | *Fan speed (% rpm)* |
| E | *Last safety shut-off (see section 3.10.)* |
| A | *Last shutdown (see section 3.10.)* |

To return to the normal display, press the **menu** key.
The boiler will automatically return to the normal display after no buttons have been pressed for 2 minutes.
**NOTE 1:** U/1 means that "U" and "1" blink alternately on the display
**NOTE 2:** the value 100% appears as "00" on the display
* = Only displayed when an external sensor is fitted.

### 3.6.3 Gas regulation check

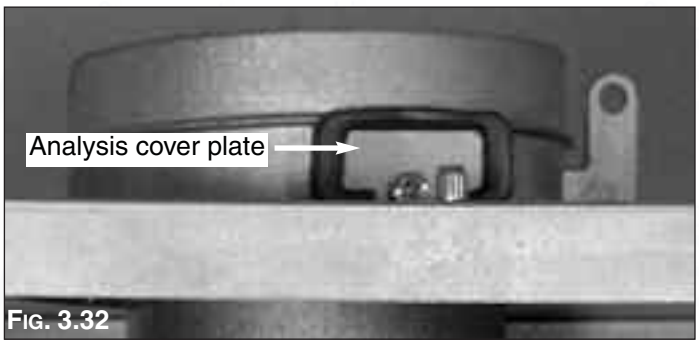

Fig. 3.32

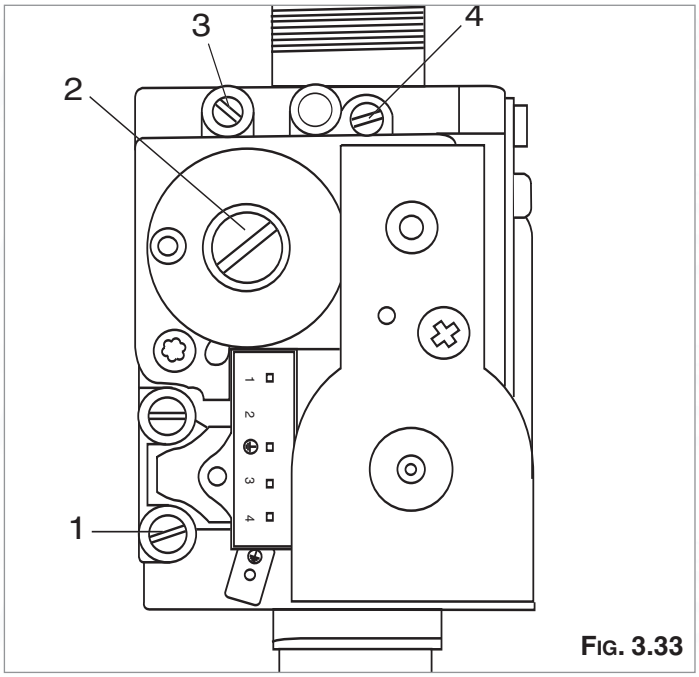

Fig. 3.33

| Supply Pressure (Working) | | |
|---|---|---|
| G20 | methane | 20 mbar |
| G31 | propane | 37 mbar |

**Table 4D**

| $CO_2$ setting Maximum Value | | |
|---|---|---|
| $CO_2$ at maximum power | % vol | 8.7 ±0.2 (NG) |
| | % vol | 10.2 ±0.2 (LPG) |

| $CO_2$ setting Minimum Value (Nat Gas) | | |
|---|---|---|
| $CO_2$ at minimum power | % vol | 9.2 ±0.2 (NG) |
| | % vol | 10.6 ±0.2 (LPG) |

**Supply pressure check**

1. Loosen screw "**1**" (Fig. 3.33) and connect the pressure gauge connection pipe into the test point.
2. Turn the boiler on at maximum power, enabling the "flue sweep" function (press the RESET key for 5 seconds and then press the programming keys ⊕ and ⊖ together ensuring the dashes are at the top of the display (see Fig. 3.30). The supply pressure should correspond to that shown for the type of gas the boiler is designed for methane gas G20 (see table below).
3. Disable the test mode by pressing the reset key.
4. When the check is over, tighten screw "**1**" and test for tightness.

Note: If the working pressure is insufficient check the gas meter, meter governor, or installation pipework for error.

## Setting the Gas Pressures

***Important!***

***Do not proceed checking and adjusting the $CO_2$ settings unless the working pressure is adequate.***

***Note: All settings are to be made with a $CO_2$ meter with the probe fitted to the flue gas analysis point.***

***Setting the CO2 at minimum power***

To check the air/gas ratio at minimum power, proceed as follows:

1. Connect the combustion analyser to the analysis point (Fig. 3.32) after removing the cover plate.
2. Set the boiler to minimum power via the test function (see paragraph 3.6.1) or by pressing the RESET button for 5 seconds and then pressing the ⊖ button on the control panel, ensure the dashes are at the bottom of the display (see Fig. 3.30). Ensure the $CO_2$ value on the analyser corresponds with the value indicated in table 4D. If this is not the case, adjust screw "**2**" (Fig.3.33) with a screwdriver in small intervals, allowing the reading to become stable before adjusting further, until you obtain the correct $CO_2$ reading. Allow the reading to become stable for at least 4 minutes.
3. When the check is over, replace the cap on screw "**2**" (Fig. 3.33).
4. Disable operation at minimum power by pressing the RESET key or press the ⊕ key to check the maximum value (dashes at top of display see Fig. 3.31).
   **While the appliance is operating at maximum power, check the gas rate of the appliance at the gas meter**

***Setting the CO2 at maximum power***

To check the air/gas ratio at maximum power, proceed as follows:

1. With the combustion analyser already connected to the analysis point, set the boiler to maximum power via the test function (see paragraph 3.6.1) or by pressing the RESET button for 5 seconds and then the programming keys ⊕ and ⊖ ensuring the dashes at the top of the display (see Fig. 3.30).
   Ensure the $CO_2$ value on the analyser corresponds with the value indicated in table 4D. If this is not the case, adjust screw "**4**" with a screwdriver in small intervals allowing the analyser reading to stabilise before adjusting further (Fig. 3.33), until you obtain the correct $CO_2$ reading. Allow the reading to become stable for at least 4 minutes.
2. Disable the test mode by pressing the RESET button.
   The test mode is automatically disabled after 5 minutes.
3. **Repeat the air/gas ratio at minimum power check (see above).**
4. Disconnect the analyser, remount the cover plate and check it is securely in place.

   **While the appliance is operating at minimum power, check the gas rate of the appliance at the gas meter**

Note: When making adjustments, adjust small amounts and wait for the analyser to stabilise before making further adjustments.

### 3.6.4 Ignition Delay Adjustment

The ignition delay can be adjusted to between 0 and 7 minutes. The delay is factory set to 2 minutes.
The value set can be displayed and modified as illustrated in paragraph 3.6.1 (parameter 3).

### 3.6.5 Adjusting the Maximum Heating Power

The maximum heating power can be adjusted between the maximum power allowed by the boiler (22.5kW - ACO 27 and 28kW - ACO 32) and the minimum recommended power (10kW - ACO 27 and 13kW - ACO 32) indicated in the graph (parameter 2 = 20). The value is factory set to 70% of the maximum power.
The value set (expressed as a percentage) can be displayed and modified as described in paragraph 3.6.1 (parameter 2) using the graph on Page 39.

**Note: MTS recommend that the minimum power not be set below 20% as indicated in the graph below.**

### 3.6.6 Soft Light Adjustment

The soft light can be adjusted between the maximum power (shown on the display as "00", i.e. 100%) and minimum power (shown on the display as "01", i.e. 1%). The boiler is factory set to a value which is suitable for ignition with any type of gas.
The value set (expressed as a percentage) can be displayed and modified as illustrated in paragraph 3.6.1 (parameter 1).

## 3.7 Changing the Type of Gas

**It is not possible to convert the ACO 27 & 32 MFFI/RFF to LPG. A specific LPG version is available as the following codes:**

**ACO 27 MFFI: 537061**
**ACO 27 RFFI: 537063**
**ACO 32 MFFI: 3300005**
**ACO 32 RFFI: 3300007**

## 3.8 Adjusting the Hot Water Flow Rate

To adjust the hot water flow rate, it is necessary to first open the hot water tap with the highest flow rate (normally the bath tap), adjust the cold water inlet valve until the correct temperature rise is achieved at the stated flow rate (ACO 27 MFFI - DT=35°C @ 10.8 l/min and ACO 32 MFFI - DT=35°C @ 13.1 l/min.

Alternatively, you can advise the customer to restrict the water flow through each individual tap, by opening the tap and slowly closing it until the water reaches the desired temperature.

## 3.9 Balancing the Central Heating System

To balance the central heating system it is first necessary to close all radiator valves on the system, turn on the central heating, allow the boiler to reach operating temperature and then starting at the radiator furthest from the boiler, open the radiator valves until the radiator becomes hot and move to the next radiator on the circuit, working your way back to the radiator closest to the boiler.

## 3.10 Boiler Safety Systems

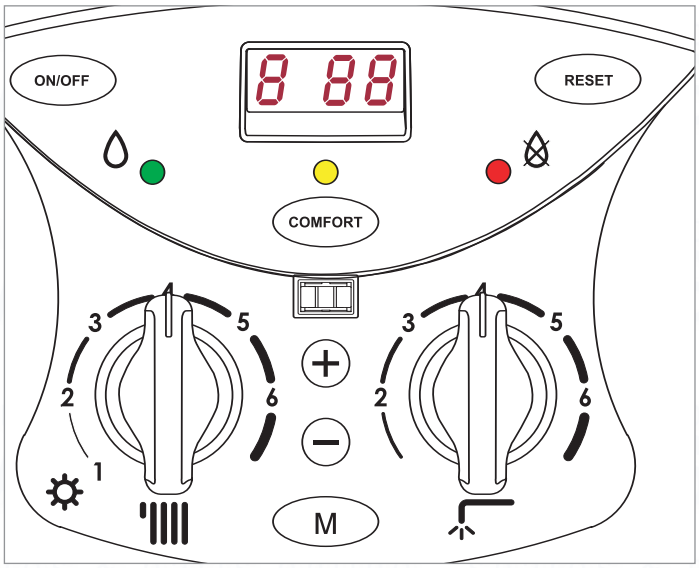


The boiler is protected from malfunctioning by means of internal checks by the P.C.B., which brings the boiler to a stop if necessary.
In the event of the boiler being shut off in this manner, a code appears on the display which refers to the type of shut-off and the reason behind it.
There are two types of shut-off:

- ***SAFETY SHUTDOWN:*** for this group of errors (characterised on the display by the letter "E") the situation is automatically removed as soon as the cause behind it is resolved.
  As soon as the origin of the shutdown disappears, the boiler starts up again and returns to its normal operation.

- ***SHUTDOWN:*** (characterised on the display by the letter "A"), is not removed unless a manual intervention is made.
  The boiler may return to operation only if reset, press the (RESET) button located at the centre of the display.

There follows a list of the shutdown modes and the respective codes shown on the display.
Shutdown ("A" type): if such a situation occurs, it is necessary to reset the boiler using the appropriate key. If this shutdown occurs frequently, your local Service Agent should be contacted.

Safety shutdown: In the event that a safety shutdown occurs, it is necessary to contact an Authorised Service Centre.

| DISPLAY | CAUSE |
|---|---|
| A01 | *Too many attempts to ignite on start up* |
| A02 | *No water or no water circulation in central heating system* |
| A03 | *The heating flow temperature exceeds 105°C during operation* |
| A07 | *Too many failures to ignite in one period during operation* |
| A33 | *Problem with the fan* |
| A97 | *Problem with the electronic monitoring* |
| A98 | *Problem with the electronic monitoring* |
| A99 | *Problem with the electronic monitoring* |

**Note:** When there is no ignition (A01), check that the gas cock is open and gas is available.

| DISPLAY | CAUSE |
|---|---|
| S01 | *Ignition failure on 1st attempt* |
| S02 | *Ignition failure on 2nd attempt* |

| DISPLAY | CAUSE |
|---|---|
| E 04 | *Domestic hot water temperature probe in open circuit* |
| E 05 | *Domestic hot water temperature probe in short circuit* |
| E 06 | *Heating flow temperature probe in open circuit* |
| E 07 | *Heating flow temperature probe in short-circuit* |
| E 08 | *Heating return temperature probe in open circuit* |
| E 09 | *Heating return temperature probe in short-circuit* |
| E 10 | *Under floor heating temperature probe in open circuit* |
| E 20 | *Flame detected with gas valve closed* |
| E 30 | *Outdoor sensor open circuit* |
| E 31 | *Outdoor sensor in short circuit* |
| E 33 | *Fan operation sensed with no demand for central heating or domestic hot water* |
| E 34 | *Fan operation but air pressure switch does not close* |
| E 80 | *Remote Control CLIMA MANAGER room sensor in open circuit or short circuit* |
| E 94 | *Problem within the electronic system* |
| E 95 | *Error reading flow or return temperature probe* |
| E 99 | *Problem within the electronic system* |

*Daily Test.*
In order to prevent sticking components, the boiler carries out a self-diagnosing test every 21 hours: the pump runs for 15 seconds and the diverter valve moves once.
*Anti-frost Device.*
The anti-frost function acts on the central heating flow temperature probe, independently from other regulations, when the electrical supply is turned on.
If the primary circuit temperature falls below 8°C the pump will run for 2 minutes.
After the two minutes of circulation (fixed) the boiler will check the following:
a) if the central heating flow temperature is > 8°C, the pump stops;
b) if the central heating flow temperature is between 3 and 8°C, the pump will run for another two minutes;
c) if the central heating flow temperature is < 3°C, the burner will fire (heating position) at minimum power until the temperature reaches 33°C, the burner will go out and the pump will continue to run for two minutes.
If the flow temperature remains between 3-8°C the pump will continue to run for two minutes for a maximum of 10 times unless a temperature above 8°C is detected in the central heating flow, after this the the burner will fire.
If lockout is caused by overheat the burner is kept OFF.

**Note:** In all cases, the circulation takes place in the central heating system.
The anti-frost device activates only when (with the boiler operating correctly):
- the system pressure is correct;
- the boiler is electrically powered;
- there is a supply of gas.

*Anti-scale Device.*
When producing domestic hot water, the burner shuts off whenever the output temperature of the hot water exceeds 61°C or the flow temperature of the primary circuit exceeds 78°C. It will not turn on if the temperature of the primary circuit is greater than 78°C.

## 3.11 Completion

For the Republic of Ireland it is necessary to complete a "Declaration of Conformity" to indicate compliance to I.S. 813. An example of this is given in the current edition of I.S. 813. In addition it is necessary to complete the benchmark commissioning checklist (Section 11, page 78).

## 3.12 Draining

The draining of the heating system must be carried out as follows:
- Turn off the boiler and the bipolar switch;
- Loosen the automatic air release valve;
- Open the system's discharge valve
- Empty out from the lowest points of the system (where provided).

If the system is to be left active in areas where the room temperature may go below 0°C during winter, it is recommended that anti-freeze liquid be added to the water in the heating system in order to avoid the need for repeated draining.

Draining the domestic hot water system
Every time that there is a danger of freezing, the domestic hot water system must be drained as follows:
- close the water mains stop-cock;
- open all the hot and cold water outlets;
- empty out from the lowest points (where provided).

# 4. ZONE VALVES

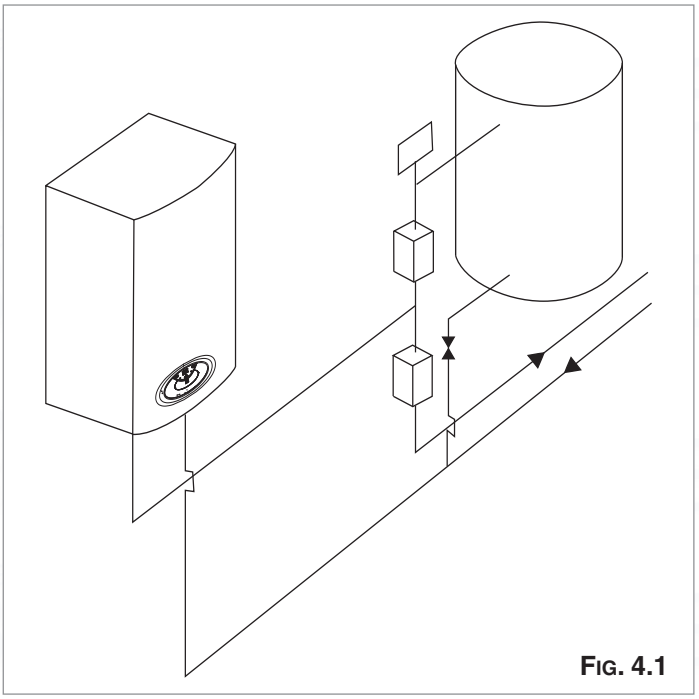

FIG. 4.1

**IMPORTANT!!**
**ENSURE THAT A BALANCING VALVE IS FITTED ON THE CYLINDER RETURN AND BALANCED CORRECTLY AT COMMISSIONING STAGE.**

The boiler can be connected to a central heating system that uses two zone valves allow connection to an indirect storage cylinder.

There are two possible types of wiring diagram, one for the connection to an Unvented Cylinder (Diagram. A, page 49) and one for connection to an open vented cylinder (Diagram B, page 50).

In both cases the boiler connection is shown as **TA**, which relates to the terminal on the PCB for external controls (see **FIG. 4.2**).

When connecting the boiler to an external cylinder it is necessary to remove the integral clock from the boiler (see **SECTION 7.6.3**), do not run 240V cables and the TA cables together, use separate cables to prevent induced voltage on the low voltage switching circuit.

**NOTE: THE USE OF A 'Y' PLAN SYSTEM IS NOT POSSIBLE WITH THE ACO BOILER DUE TO THE LOW VOLTAGE SWITCHING OF THE APPLIANCE.**

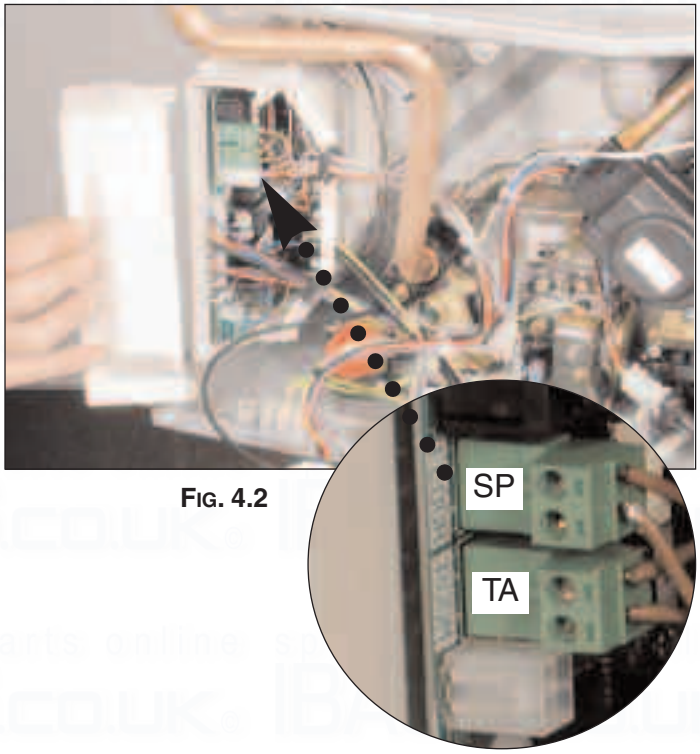


FIG. 4.2

## Wiring Diagram for Connection to an Ariston Unvented Cylinder

**Diagram A**

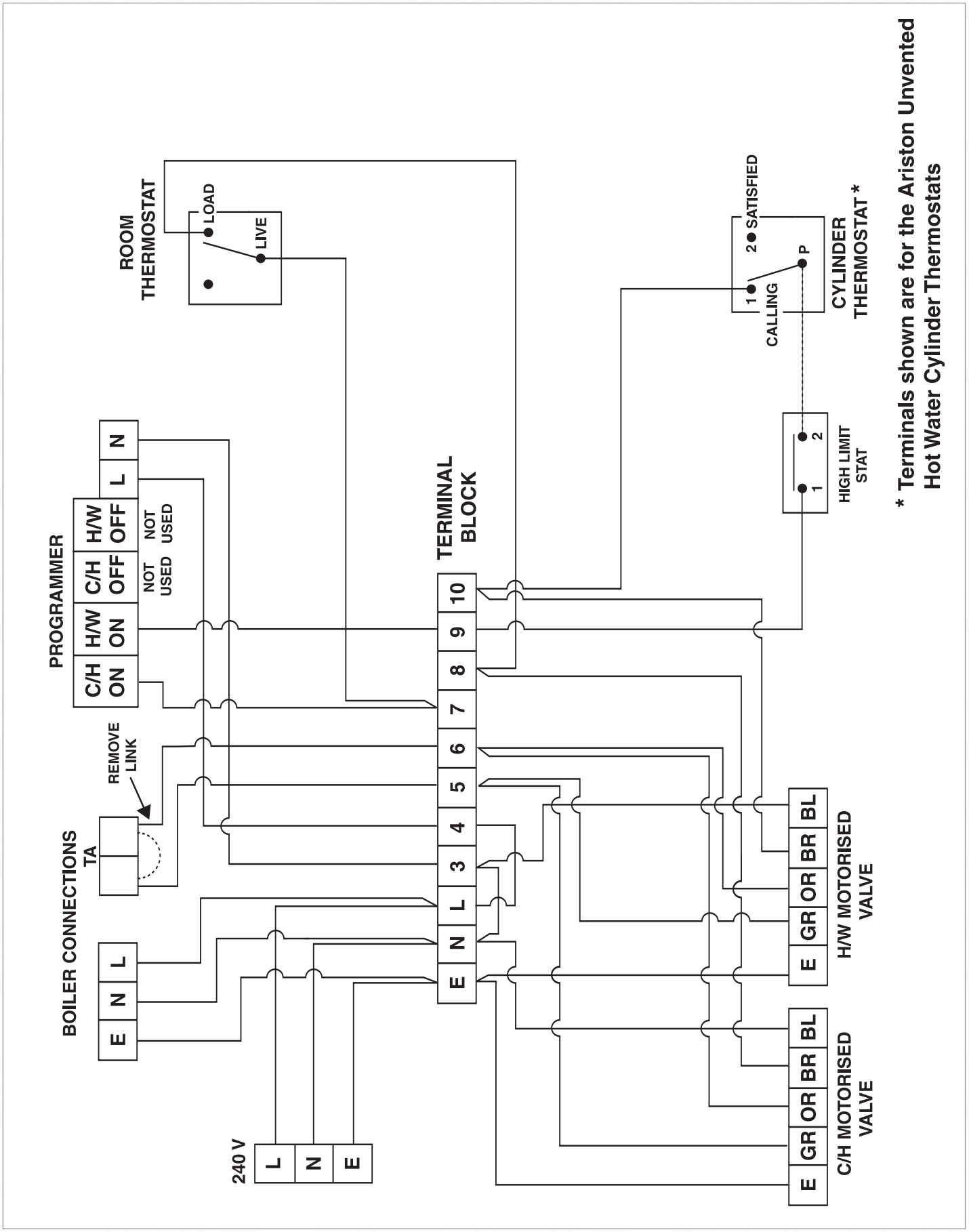

## Wiring Diagram for Connection to an Open Vented Cylinder

**Diagram B**

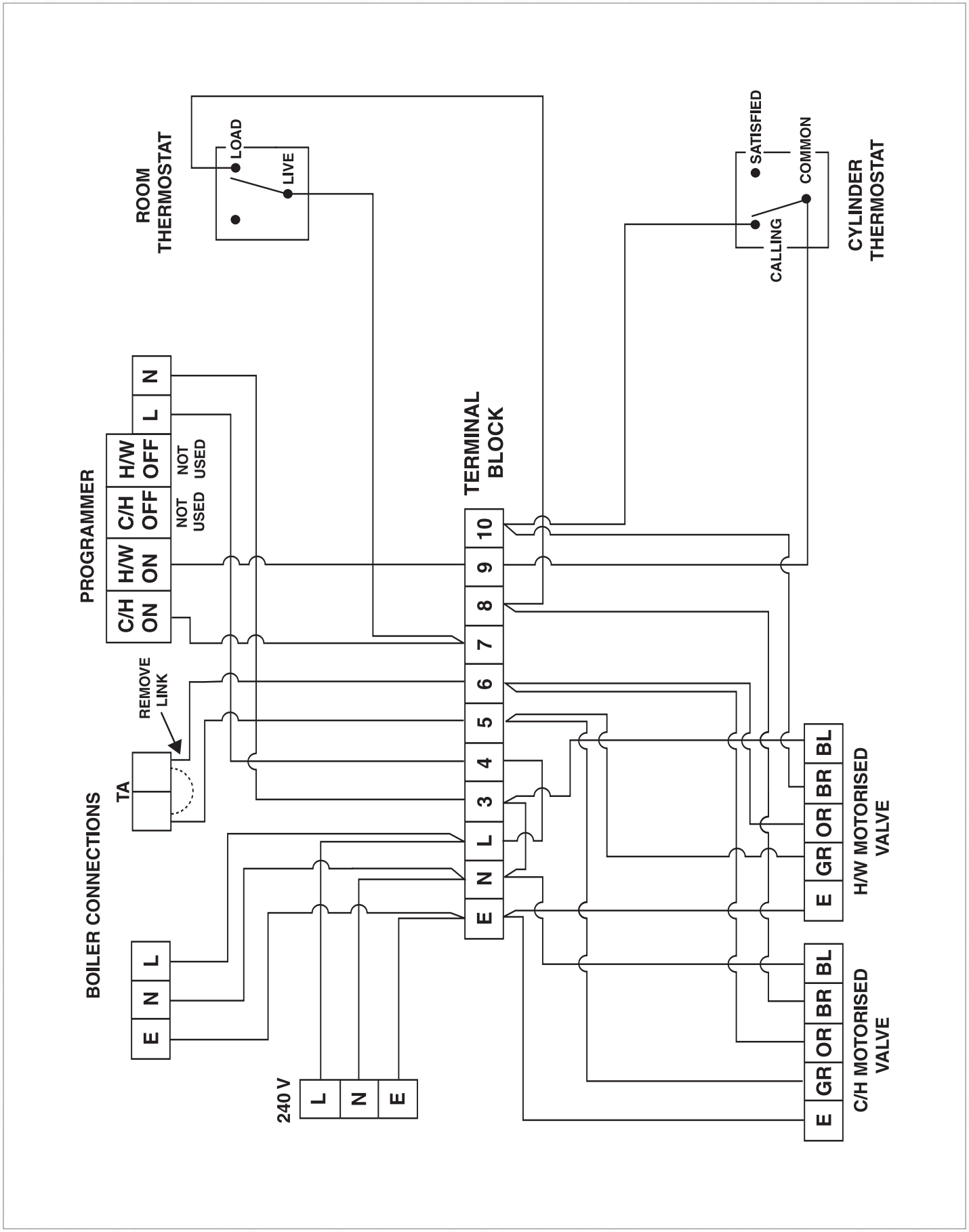

# 5. SEQUENCE OF OPERATION

## 5.1 CENTRAL HEATING MODE

Activation of the time clock and/or room thermostat starts the boiler. The letter C is shown in the display followed by the flow temperature.

With the boiler in rest, the diverter valve is in the domestic hot water position, activation of the central heating changes the position of the motorised valve head, moving the diverter valve into the central heating position.

The start of the pump is delayed for 7 seconds to allow the movement of the diverter valve (when the pump starts it at speed 2). There then follows a temperature and flow rate check on the flow NTC (NTC1) and the return NTC (NTC2). The electronics check NTC's 1 and 2 for the correct DT (difference in temperature). The DT must be less than 5°C. If this is not correct after 40 seconds, error code E95 is shown but the pump continues to run. When the check is correct the boiler automatically starts the sequence. Following the satisfaction of the temperature/NTC check the fan starts and an ignition attempt is then made for 3 seconds after the fan starts. The gas valve is energised and gas is delivered to the burner fixed in relation the the fan. The ignition gas pressure (soft light) is adjusted at Step 1 in the parameter adjustment mode (see Section 3.6.1). This value is factory set. (1= minimum fan speed and 00 = maximum fan speed). Soft light takes 4 seconds, the electronics check for flame ionisation during this time. Failure on ignition results in the error code A01.

For 12 seconds following the gas valve being energised, the ignition is checked and the temperature and flow through the boiler is monitored by the electronics. The DT must increase by more than 50°C. To check the correct temperature and flow the boiler remains at a fixed output for 5 seconds, this value is 50 and can be viewed at Step 6 (Section 3.6.1.) Incorrect readings will result in the error code A02 being displayed and the pump stopping.

Following all checks the boiler is free to modulate the central heating output. The maximum heat output is set at Step 2 (see Section 3.6.1) and is adjustable between 1 and 00 (minimum and maximum output). The burner can activate up to a maximum of the set point at +4°C. reignition of the burner occurs once it has thermostatically turned off can be time delayed between 0 and 7 minutes, adjustable in Step 3 (Section 3.6.1), the factory setting is 2 minutes.

After correct operation is proven the pump speed changes to speed 3 (if the system is cold), if the system is warm the pump remains at speed 2.

In the event of overheating the display will show A03.

## 5.2 DOMESTIC HOT WATER MODE

When a hot water tap is turned on the domestic hot water flow switch is operated (if the diverter valve is in the central heating position it will motor into the domestic hot water position and the boiler starts. The letter d is shown in the display followed by the temperature of the domestic hot water leaving the appliance.

The appliance will then follow the same operating logic as described in Central Heating Mode.

In domestic hot water mode NTC1 limits the maximum temperature to 78°C, reignition will occur at 74°C. The domestic hot water temperature is limited to 61°C, reignition will occur at 60°C.

# 6. MAINTENANCE

## 6.1. General Remarks

**IMPORTANT!!**

Every time that the combustion chamber cover or the primary heat exchanger is removed from the boiler, the combustion chamber seal must be checked and where necessary replaced (code: 65102217). The silicone grease provided with the gasket must be spread around the area the gasket fits to ensure an airtight seal.

Only the grease provided must be used, however, should more grease be needed it must have a temperature range of between –40 deg C and +200 deg C"

**Do not operate the boiler with the front combustion chamber panel removed! Failure to observe this will damage the fan and air pressure switch and will invalidate any warranty.**

To ensure the validity of the 5 Year Guarantee, the boiler **must** be serviced annually by a CORGI registered gas engineer.

Provided the boiler was registered within the terms stated on the guarantee card, MTS (GB) Limited will write to the householder as the boiler becomes due for it's annual service.

The requirements stated in the letter must be adhered to in order to ensure the continuation of the 5 year guarantee.

See Section 10 for annual maintenance requirements.

**Note: Failure to comply with the annual service requirements will result in the 5 year guarantee becoming void.**

## 6.2. Cleaning the Primary Exchanger

CLEANING THE EXHAUST SIDE
Remove the combustion chamber inspection hatch (see section 7.3.5). Check that the exhaust passages between the blades of the block are free; if there are deposits present, wash the blades with compressed air, water or a vinegar-based detergent.
NOTE: it is possible to use a brush in order to mechanically remove the residues.

Use of detergents:
- soak the blades well
- allow the detergent to act for about 20 minutes
- rinse with a strong jet of water to remove the deposits (the control panel must be kept closed)
- make sure that there are no traces of detergents in the exchanger.

CLEANING THE WATER SIDE
Use detergents that dissolve CaCO3. Leave to act for a short time (in order not to damage the aluminum) and then rinse. Make sure that the detergent does not remain inside the exchanger.

## 6.3. Cleaning the Condensate Trap

To clean the condensate trap it is simply necessary to unscrew the lower part of the condensate trap and clean it. Lastly, fill it with water and replace the stopper.

**IMPORTANT!!**

If the boiler is not to be used for a prolonged period, the condensate trap should be filled before operating the boiler. A shortage of water in the trap will temporarily risk flue gasses escaping into the room.

## 6.4. Operational Test

After having carried out the maintenance operations, fill the heating circuit to a pressure of approx. 1.5 bar and release the air from the system. Also fill the domestic hot water system.
- Place the boiler in operation;
- If necessary, release the air again from the heating system.
- Check the settings and the correct functioning of all the control, regulation and monitoring parts;
- Check the seal and the correct functioning of the system for expelling fumes/drawing of combustion air;
- Check that the boiler ignites properly and carry out a visual check on the burner flame;
- Check the $CO_2$ values are correct (see Section 3.6.3)

# 7. SERVICING INSTRUCTIONS

To ensure efficient safe operation, the boiler must be serviced annually by a competent person.

**Before starting any servicing work, ensure both the gas and electrical supplies to the boiler are isolated and the boiler is cool.**
Before and after servicing, a combustion analysis should be made via the flue sampling point (please refer to 3.6.3).

After servicing, preliminary electrical system checks must be carried out to ensure electrical safety (i.e. polarity, earth continuity, resistance to earth and short circuit).

## 7.1. Replacement of Parts

The life of individual components vary and they will need servicing or replacing as and when faults develop.
The fault finding sequence chart in chapter 2 will help to locate which component is the cause of any malfunction, and instructions for removal, inspection and replacement of the individual parts are given in the following pages.

## 7.2. To Gain General Access

All testing and maintenance operations on the boiler require the control panel to be lowered. This will also require the removal of the casing.

***To lower the control panel and dismantle the front part of the casing, proceed as follows:***
To remove the front casing panel, follow these steps:

1. Remove the screws “A” (Fig. 7.1);
2. Loosen the four screws ‘B’ from the case hooks (two at the top and two at the bottom) and rotate anti-clockwise (Fig. 7.2);
3. Lift and unhook the case panel (Fig. 7.3);
4. Lower the control panel (Fig. 7.4)

Fig. 7.1

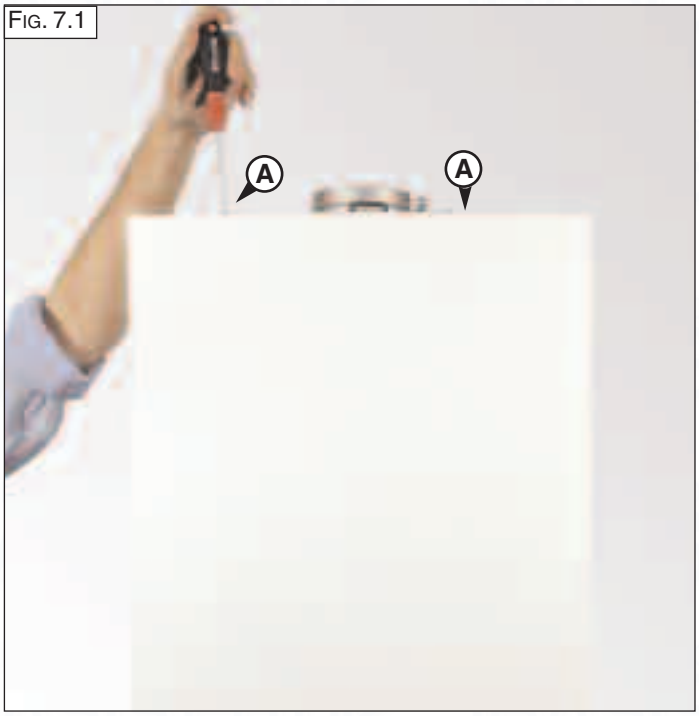


Fig. 7.2

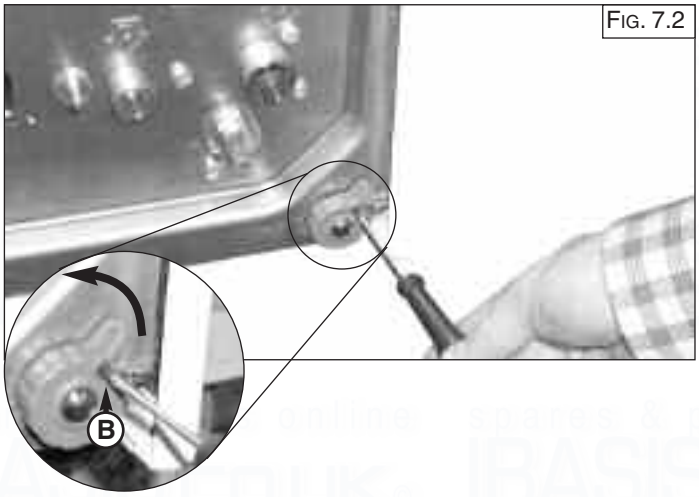


Fig. 7.3

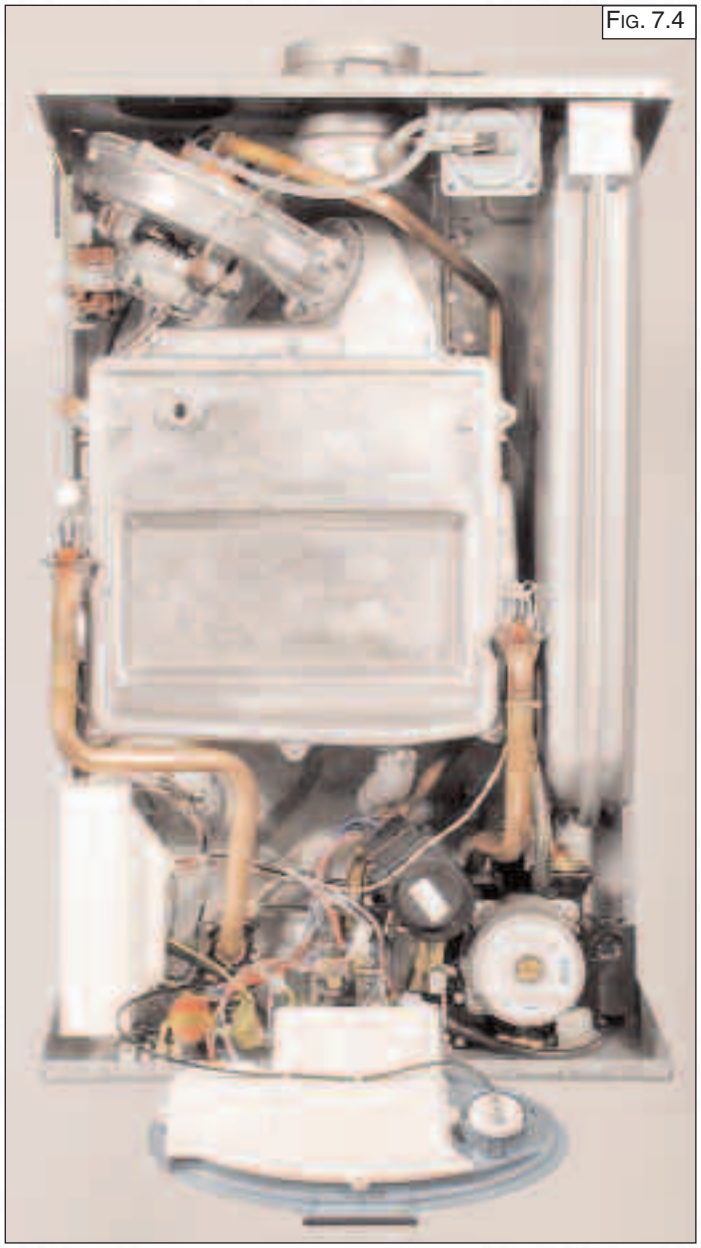
Fig. 7.4

## 7.3. Access to the Combustion Chamber

### 7.3.1. Removing the Fan

***1.*** Disconnect the electrical connector “C” (Fig. 7.5);
***2.*** Disconnect the compensation tube “D” (Fig. 7.5);
***3.*** Remove the clip “E” (Fig. 7.6).
***4.*** Unscrew the four screws “F” (Fig. 7.7);
***5.*** Remove the fan (Fig. 7.8).

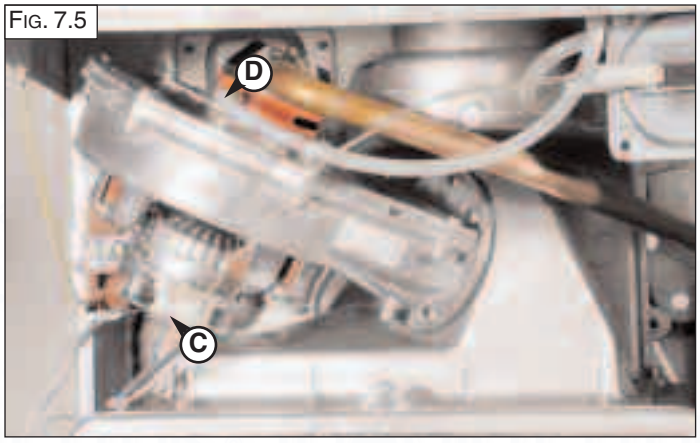

Fig. 7.5

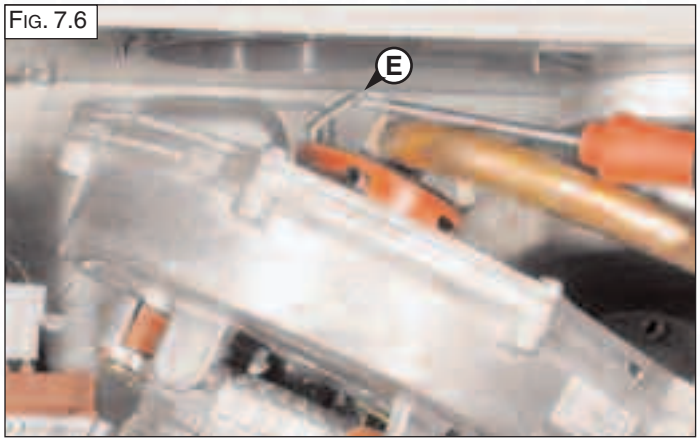

Fig. 7.6

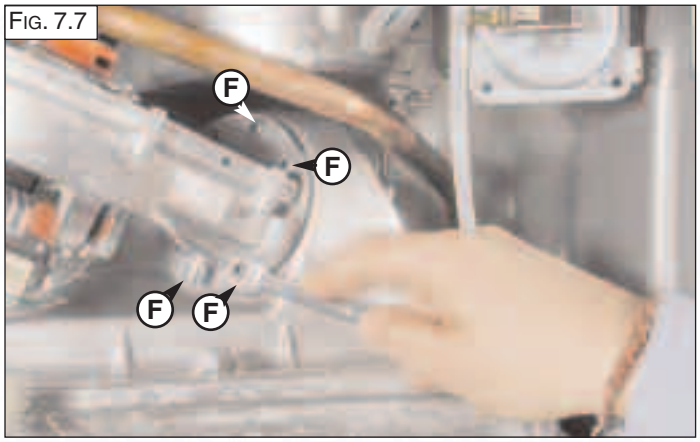

Fig. 7.7

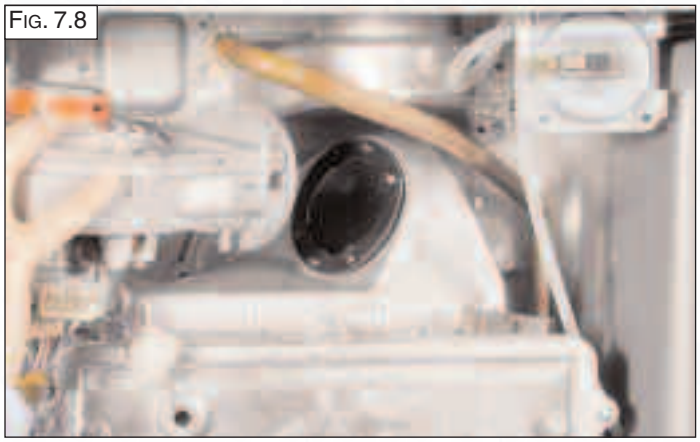
Fig. 7.8

### 7.3.2. Removing the Air Pressure Switch

*1.* Disconnect the electrical connector “G” (Fig. 7.9);
*2.* Disconnect the compensation tube “H” (Fig. 7.9);
*3.* Unscrew the two screws “I” (Fig. 7.10);
*4.* Remove the Air Pressure Switch

Fig. 7.9

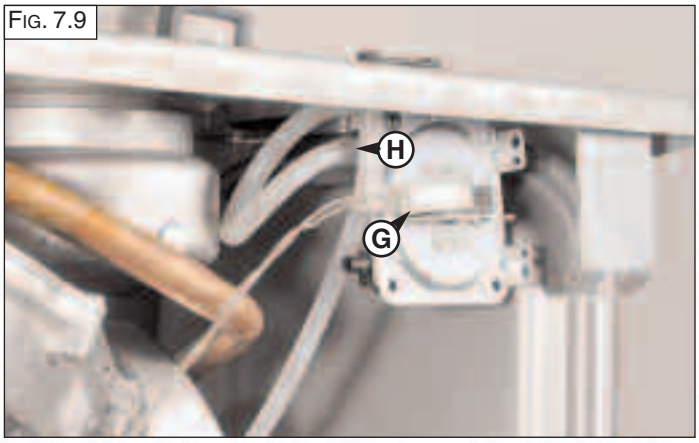


Fig. 7.10

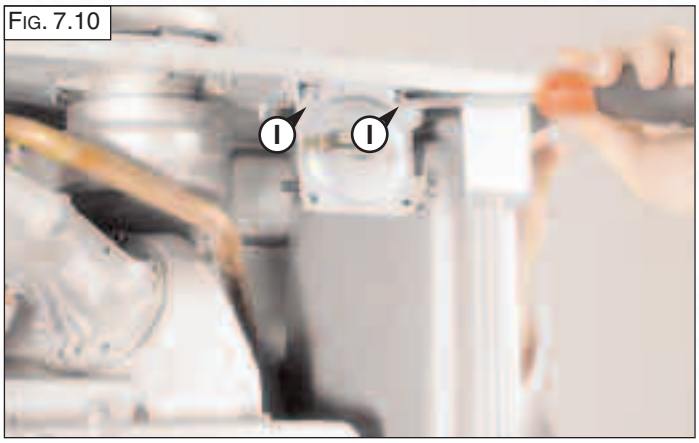


### 7.3.3. Removing the Burner

*With the fan removed (see Section 7.3.1);*
*1.* Remove the four allen screws “J” (Fig. 7.11);
*2.* Slide the burner from its housing (Fig. 7.12 - 7.13).

Fig. 7.11

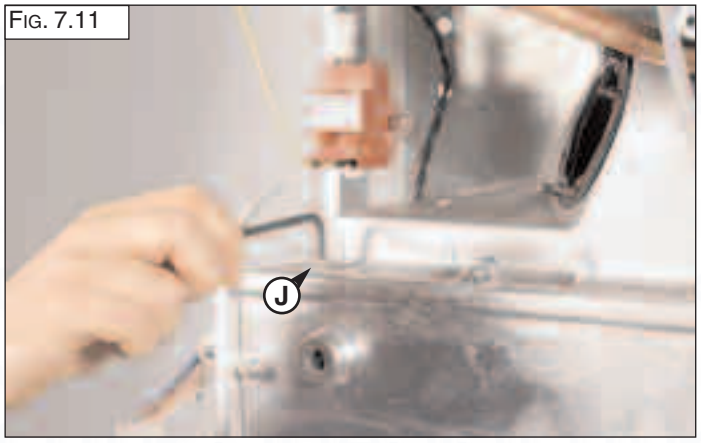


Fig. 7.12

Fig. 7.13

### 7.3.4. Removing the Electrodes

*1.* Remove the two allen screws “K”, pulling off the ignition cable (Fig. 7.14);
*3.* Extract the electrodes (Fig. 7.15).

Fig. 7.14

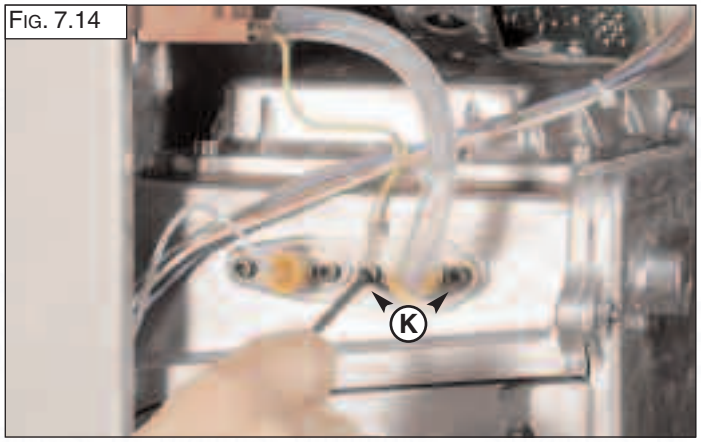


Fig. 7.15

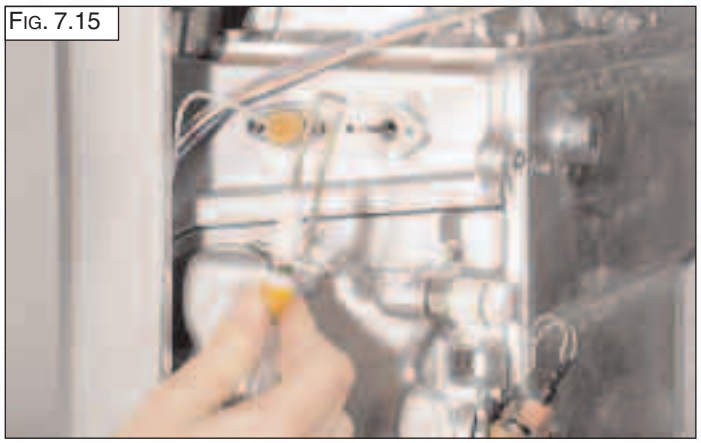

### 7.3.5. Removing the Heat Exchanger

**IMPORTANT!!**

Every time that the combustion chamber cover or the primary heat exchanger is removed from the boiler, the combustion chamber seal must be checked and where necessary replaced (code: 65102217). The silicone grease provided with the gasket must be spread around the area the gasket fits to ensure an airtight seal.

Only the grease provided must be used, however, should more grease be needed it must have a temperature range of between –40 deg C and +200 deg C”

*1.* Drain the boiler;
*2.* Remove the six nuts “L” (Fig. 7.16);
*3.* Remove the C.H. flow and return temperature probe unscrewing the screws “M” (Fig. 7.16);
*4.* Remove the front cover;
*5.* Unscrew the two allen screws “N” (Fig. 7.17) and remove the clip (7.18);
*6.* Remove the “U” clip “O” (Fig. 7.19) and remove the C.H. flow water pipe (Fig. 7.20);
*7.* Remove the “U” clip “P” (Fig. 7.21) and remove the C.H. return water pipe (Fig. 7.22);
*8.* Pull forward the heat exchanger (Fig. 7.23 - 7.24).

Fig. 7.16

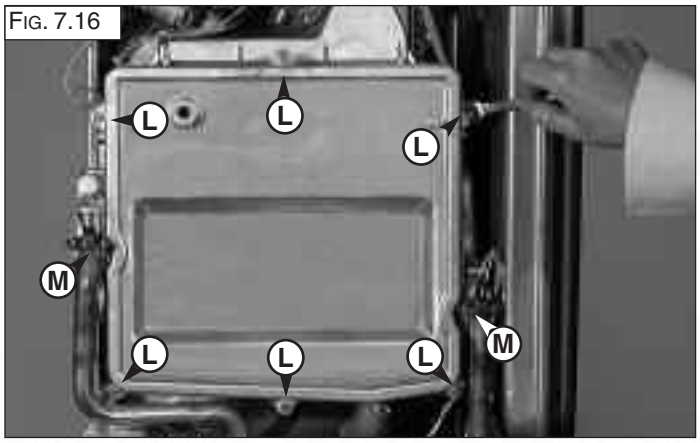


Fig. 7.17

FIG. 7.18

FIG. 7.19

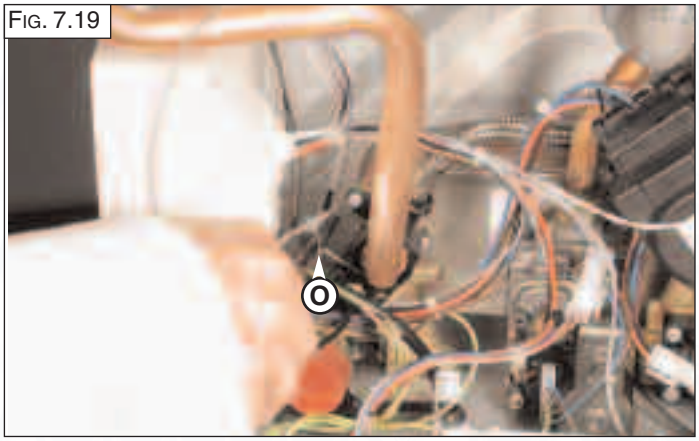


FIG. 7.20

FIG. 7.21

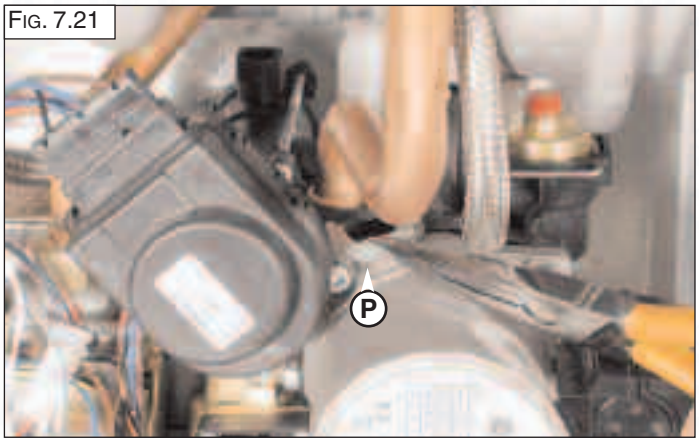


FIG. 7.22

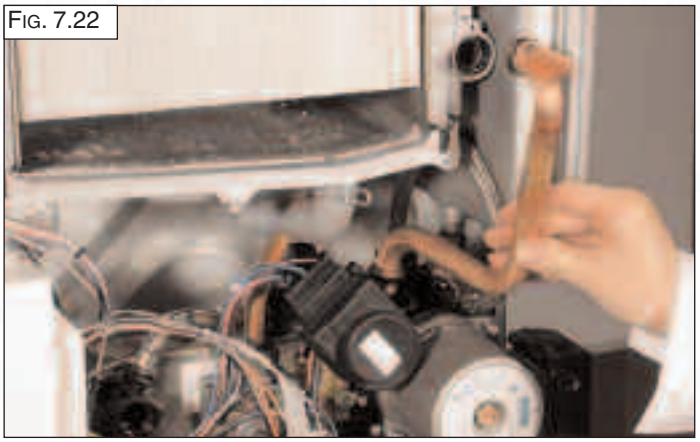

FIG. 7.23

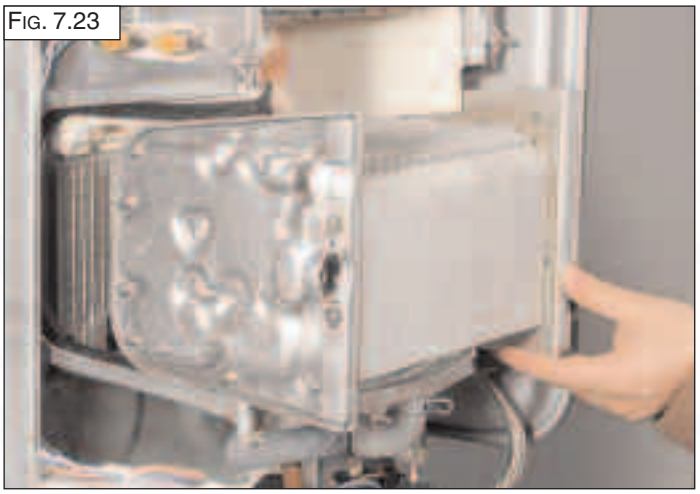

FIG. 7.24

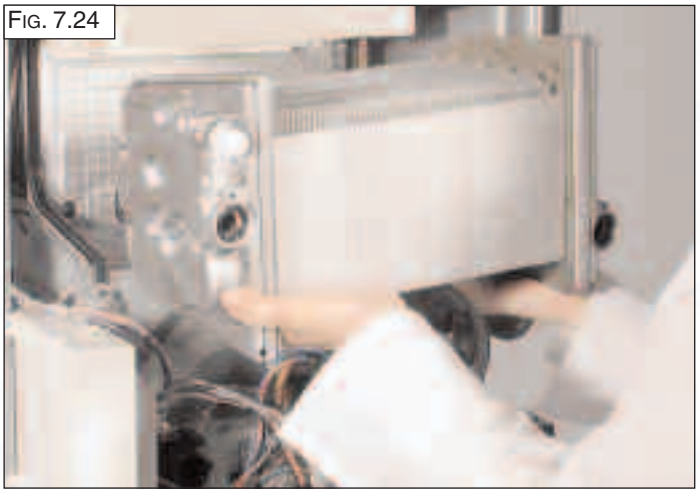

### 7.3.6. Removing the Condensate Trap (tube)

1. Open the clamp “Q” and remove the condensate trap connection pipe (Fig. 7.25);
2. Unscrew the screw “R” (Fig. 7.26);
3. Remove the condensate tube.

Fig. 7.25

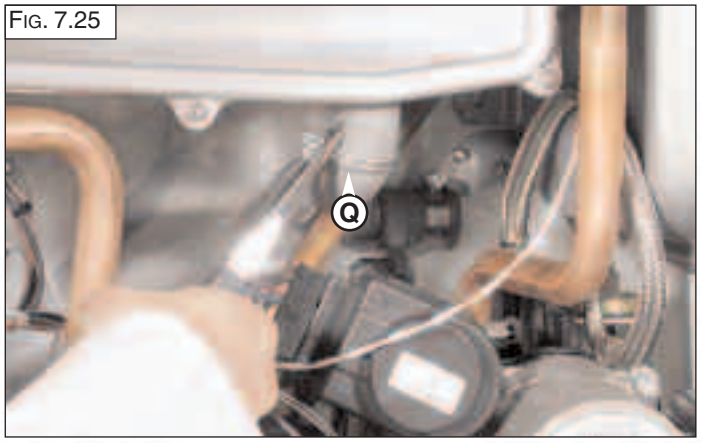


Fig. 7.26

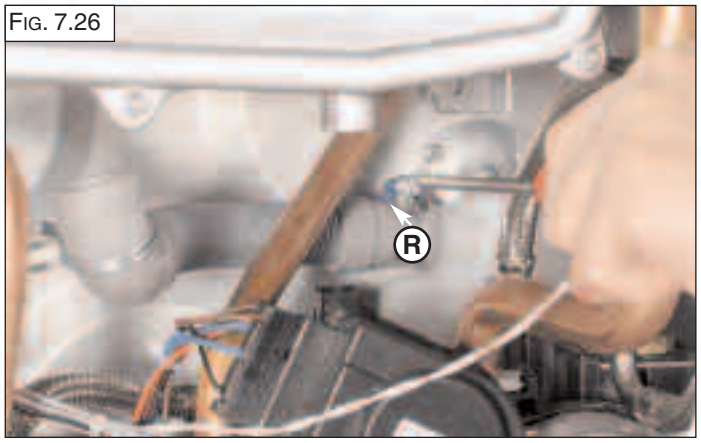


### 7.3.7. Removing the Condensate Trap

1. Remove the condensate trap tube (see section 7.3.6);
2. Unscrew the screw “S” (Fig. 7.27);
3. Remove the blanking cap “T” (Fig. 7.28);
4. Remove the trap from the boiler.

**NOTE:** Take care when removing the blanking cap to place a container under the boiler as this will release the contents of the condensate trap.

Fig. 7.27

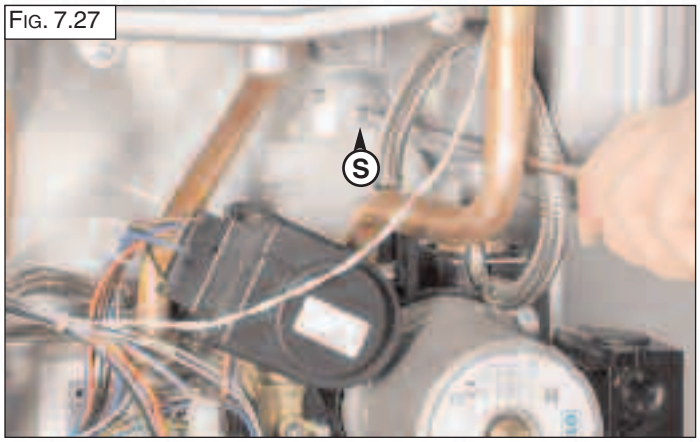


Fig. 7.28

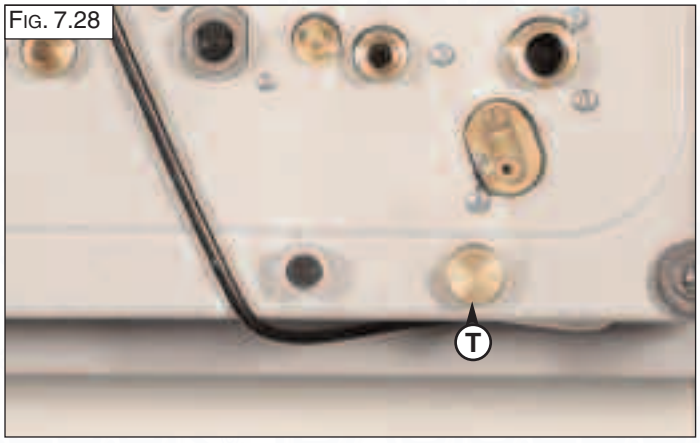

## 7.4 Access to the Gas Valve

1. Remove the casing and lower the control panel as instructed in Section 7.1.
2. Press the release button “U” for the control panel (Fig. 7.29) and pull forward to remove from the boiler frame.
3. Clip the control panel onto the frame of the boiler. (Fig. 7.30).

Fig. 7.29

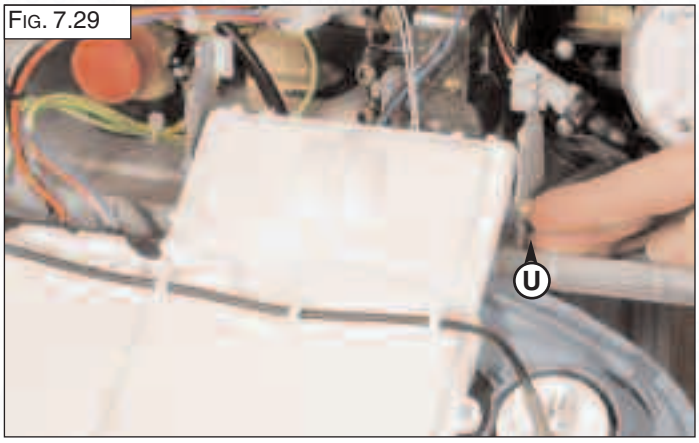


Fig. 7.30

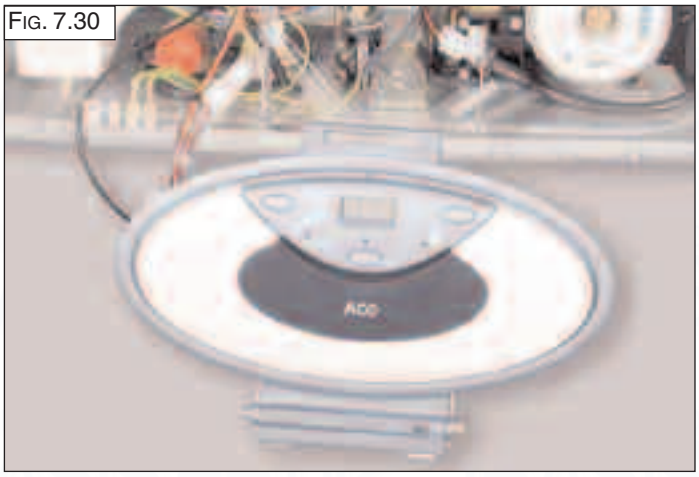

### 7.4.1. Removing the Gas Valve

1. Disconnect the electrical connection “V” from the gas valve (Fig. 7.31);
2. Release the top nut “W” (Fig. 7.31);
3. Remove the screws “X” from the bottom of the gas valve pipe (Fig. 7.32);
4. Remove the gas valve (Fig. 7.33).

Fig. 7.31

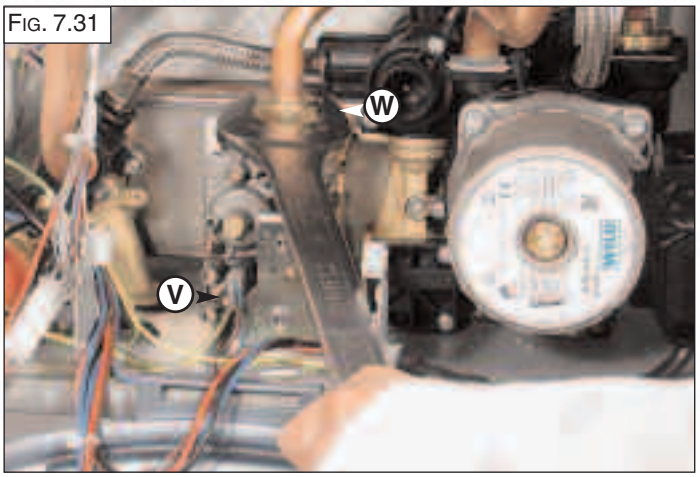


Fig. 7.32

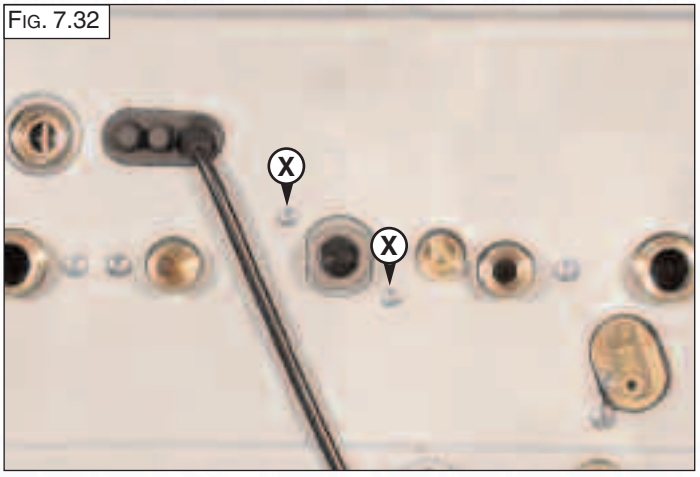


Fig. 7.33

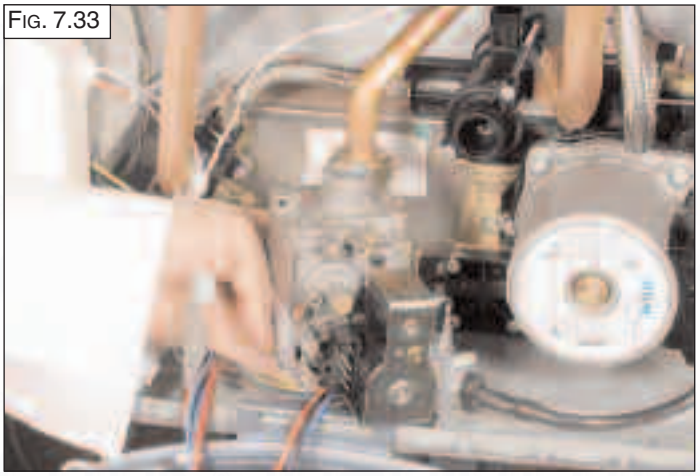

### 7.4.2. Removing the spark generator

1. Disconnect the electrical connection “Y” from the spark generator (Fig. 7.34);
2. Remove the screws “Z” from the bottom of the spark generator (Fig. 7.35);
4. Remove the spark generator.

Fig. 7.34

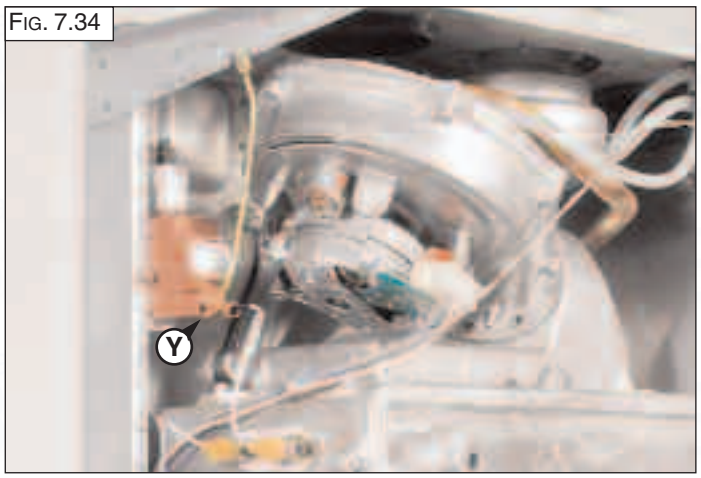


Fig. 7.35

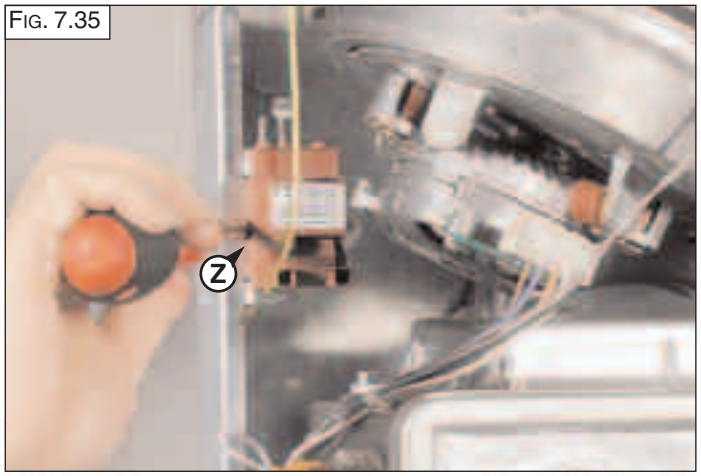


## 7.5 Access to the Water Circuit

***Important!*** Before any component is removed, the boiler must be drained of all water.

### 7.5.1. Removing the D.H.W. (Secondary) Exchanger (MFFI only)

1. Remove the two allen screws “A1” (Fig. 7.36);
2. Push the exchanger towards the rear of the boiler, lift upwards and remove from the front of the boiler (Fig. 7.37 - 7.38);
3. Before replacing the exchanger ensure that the O-rings are in good condition and replace if necessary.

Fig. 7.36

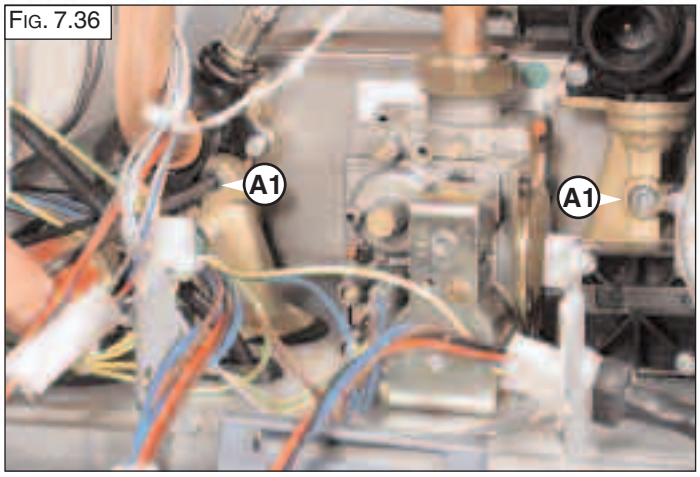


Fig. 7.37

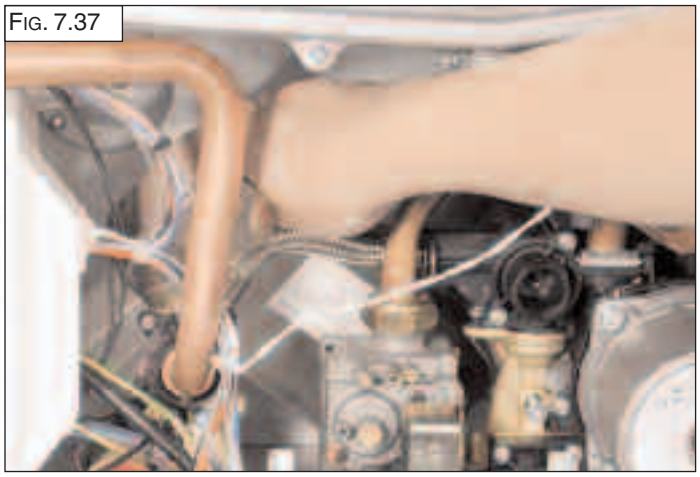

Fig. 7.38

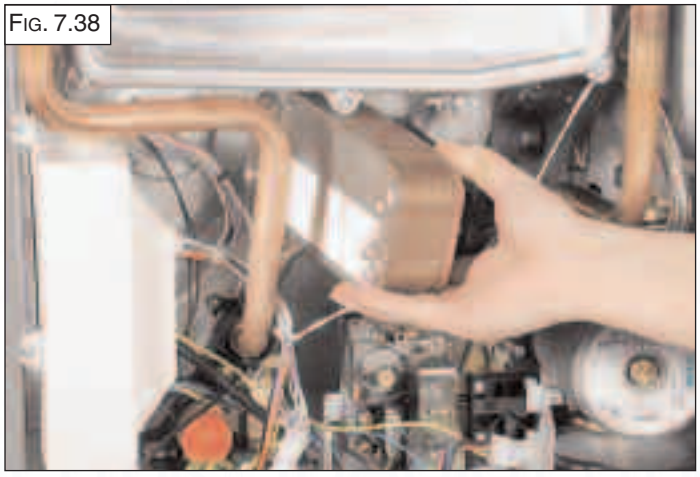

### 7.5.2. Removing the Safety Valve

***1.*** Remove the U-clip “A2” (Fig. 7.39);
***2.*** Remove the valve (Fig. 7.40).

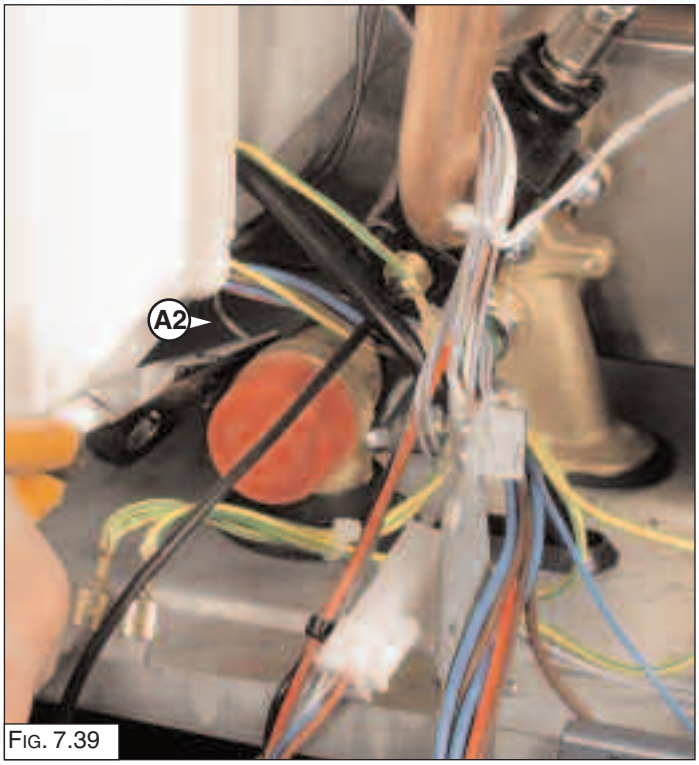

Fig. 7.39

Fig. 7.40

### 7.5.3. Removing the Automatic Air Vent

***1.*** Remove the U-clip “A3” (Fig. 7.41);
***2.*** Unscrew valve (Fig. 7.42);
***3.*** Remove (Fig. 7.43).

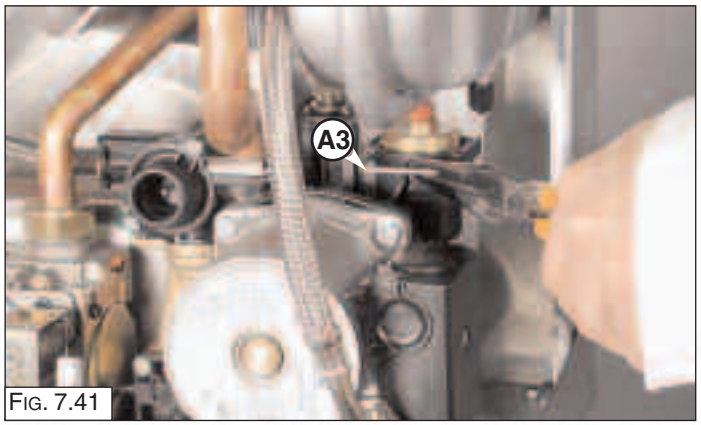

Fig. 7.41

Fig. 7.42

Fig. 7.43

### 7.5.4. Removing the Diverter Valve Actuator

*1.* Unplug the electrical connector “A4” (Fig. 7.44);
*2.* Release the retaining clip “A5” and remove the diverter valve actuator (Fig. 7.45).

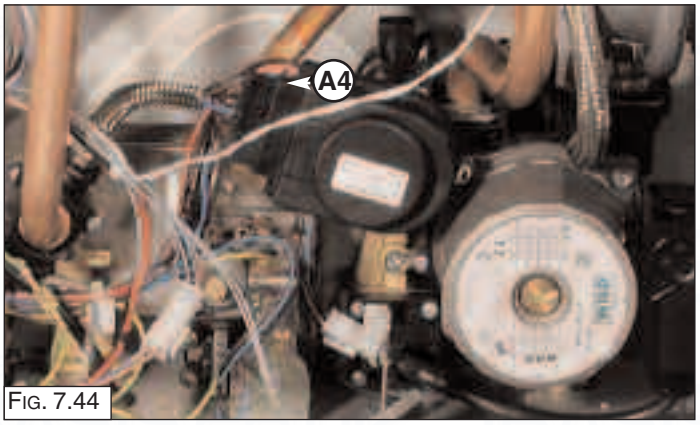

Fig. 7.44

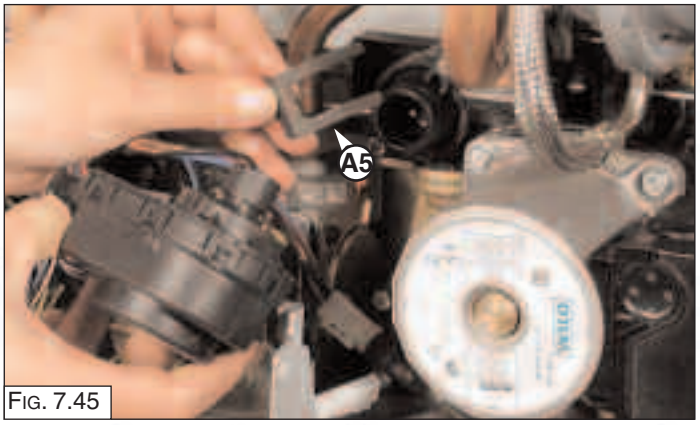

Fig. 7.45

### 7.5.5. Removing the D.H.W. Flow Switch (MFFI only)

*1.* Unplug the electrical connector;
*2.* Unscrew the four screws “A6” (Fig. 7.46);
*3.* Remove the D.H.W. flow switch (Fig. 7.47).

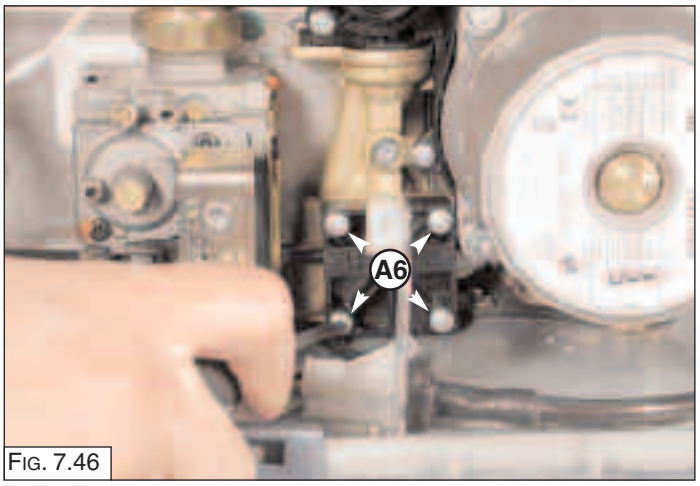

Fig. 7.46

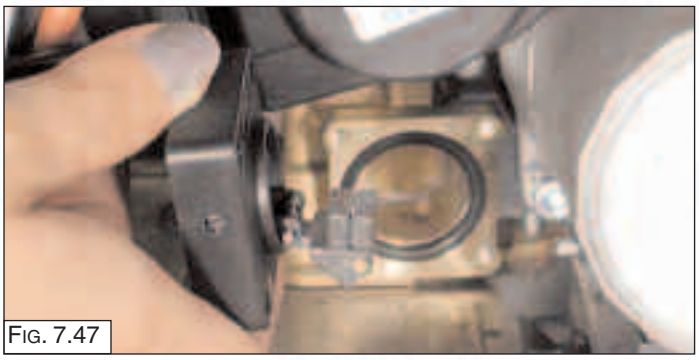
Fig. 7.47

### 7.5.6. Removing the Pump

*1.* Unplug the electrical connection “A7” (Fig. 7.48);
*2.* Unscrew the four screws “A8” (Fig. 7.49);
*3.* Remove the pump (Fig. 7.50).

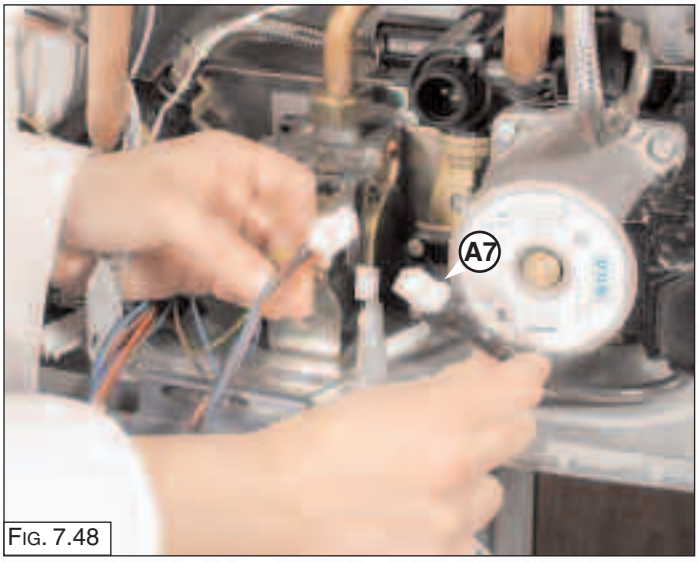

Fig. 7.48

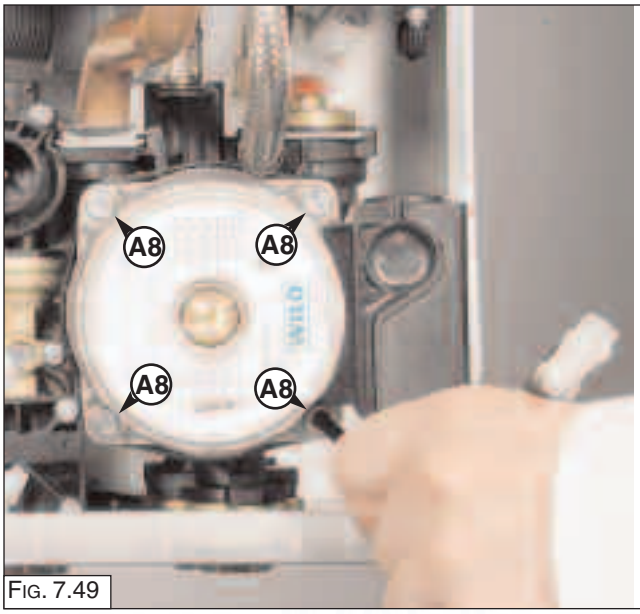

Fig. 7.49

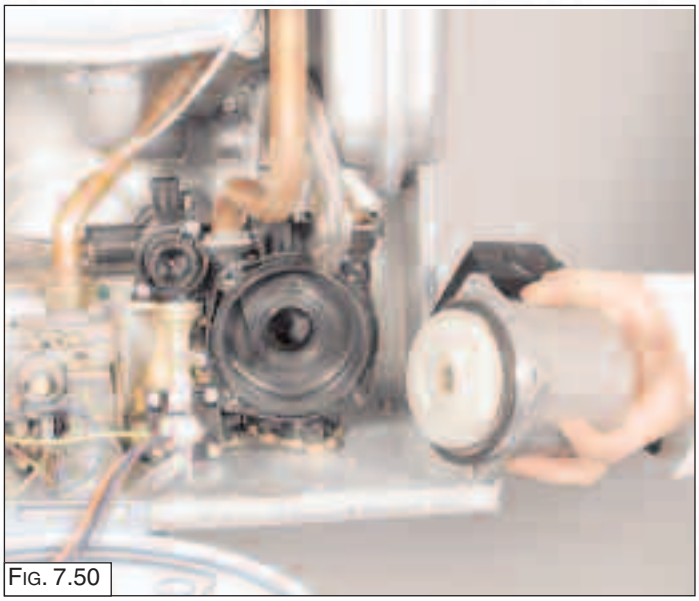

FIG. 7.50

### 7.5.7. REMOVING THE PRESSURE GAUGE

1. Release U-clip “B1” (FIG. 7.51 - 7.52);
2. Ease the pressure gauge through the control panel from the rear;
3. Remove the pressure gauge. (FIG 7.53).

FIG. 7.51

FIG. 7.52

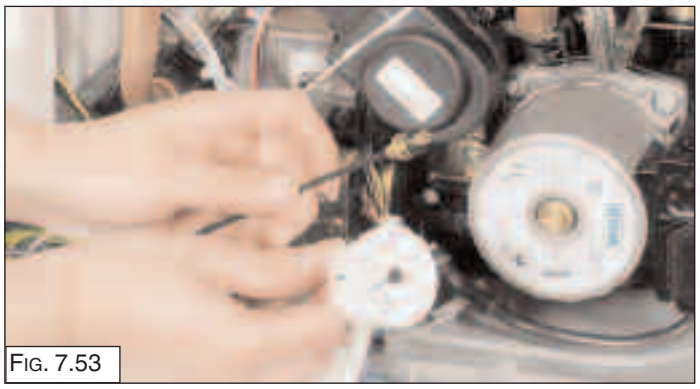

FIG. 7.53

### 7.5.8. Removing the Expansion Vessel

*1.* Unscrew the screws “B2” (Fig. 7.54);
*2.* Loosen nut “B3” (Fig. 7.55);
*3.* Unscrew the screw “B4” (Fig. 7.56);
*3.* Remove the expansion vessel (Fig. 7.57).

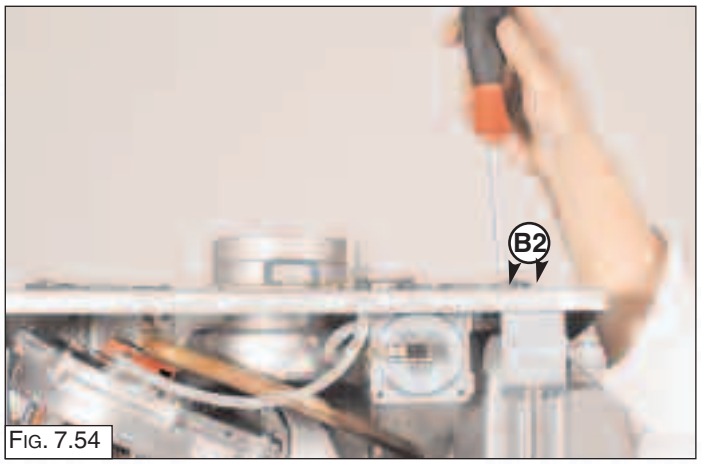

Fig. 7.54

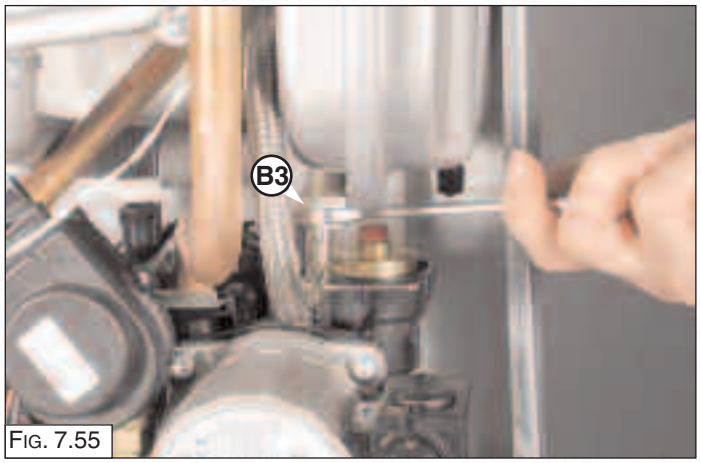

Fig. 7.55

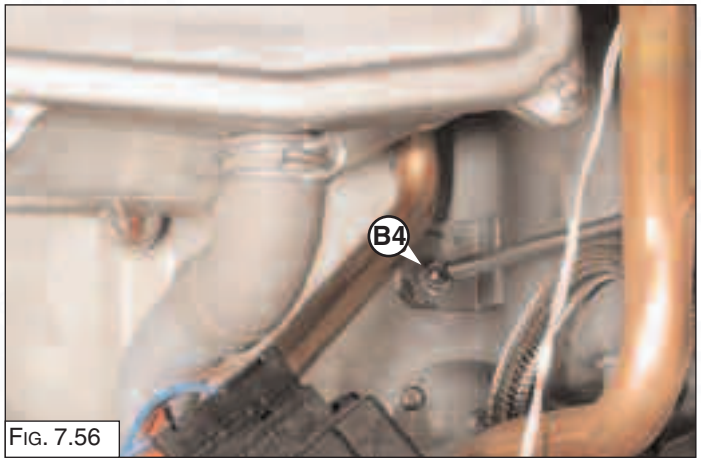

Fig. 7.56

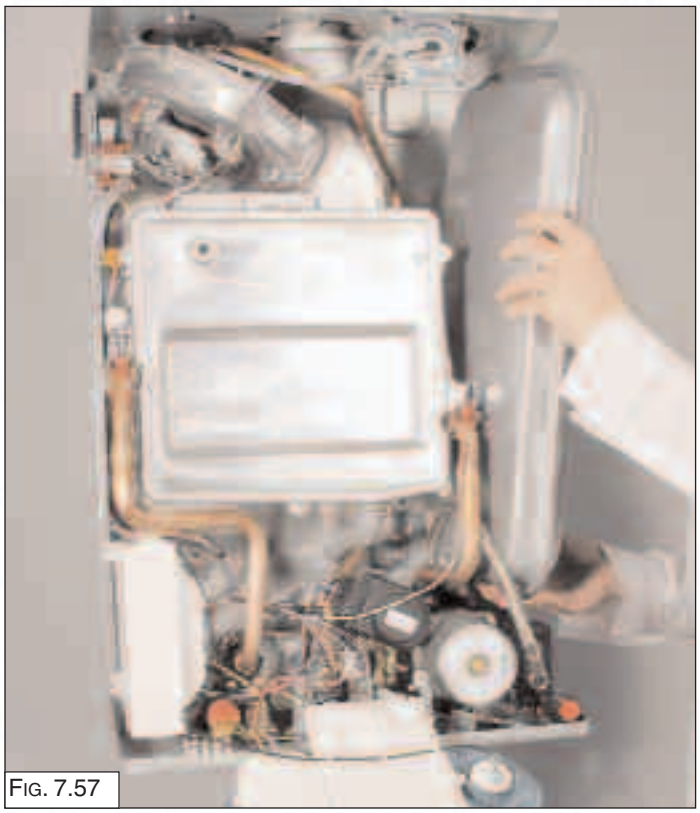
Fig. 7.57

### 7.5.9 Removing the D.H.W. Temperature Probe (N.T.C.) (MFFI only)

*1.* Remove the electrical connector “B5” by pulling off (Fig. 7.58);
*2.* Unscrew and remove the D.H.W. temperature probe “B6” (Fig. 7.59).

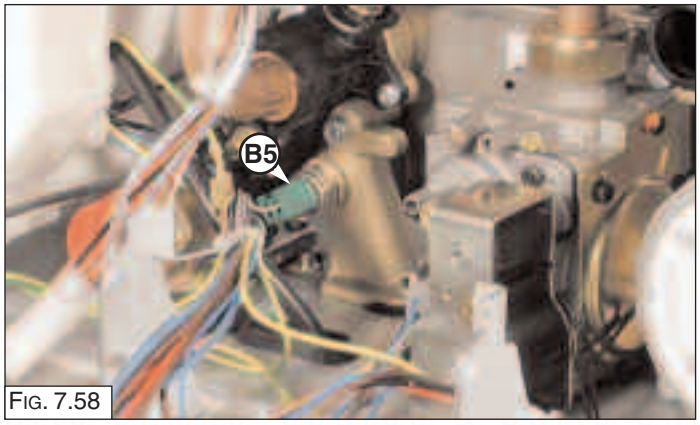

Fig. 7.58

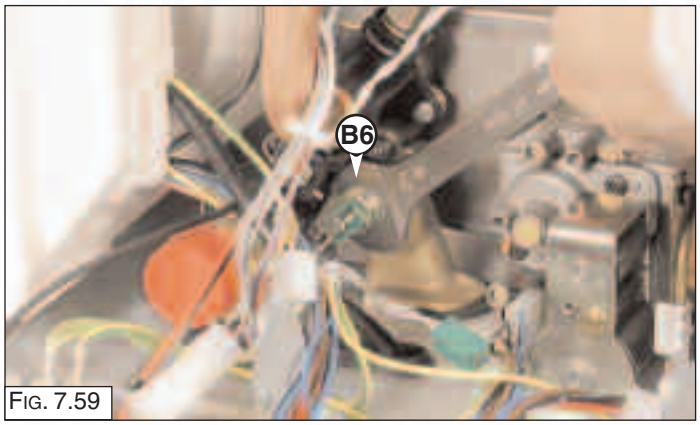

Fig. 7.59

### 7.5.10. Removing the C.H. Flow Temperature Probe (N.T.C.)

1. Unscrew the two screws “B7” (Fig. 7.60);
2. Remove the electrical connection from the C.H. flow temperature probe (Fig. 7.61).

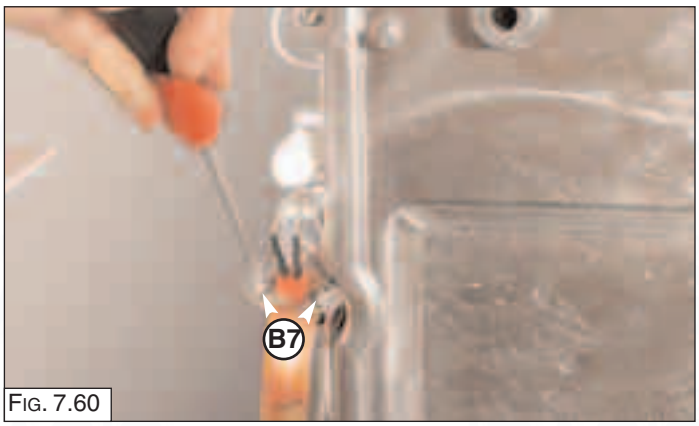

Fig. 7.60

Fig. 7.61

### 7.5.11. Removing the C.H. Return Temperature Probe (N.T.C.)

1. Unscrew the two screws “B8” (Fig. 7.62);
2. Remove the electrical connection from the C.H. flow temperature probe (Fig. 7.63).

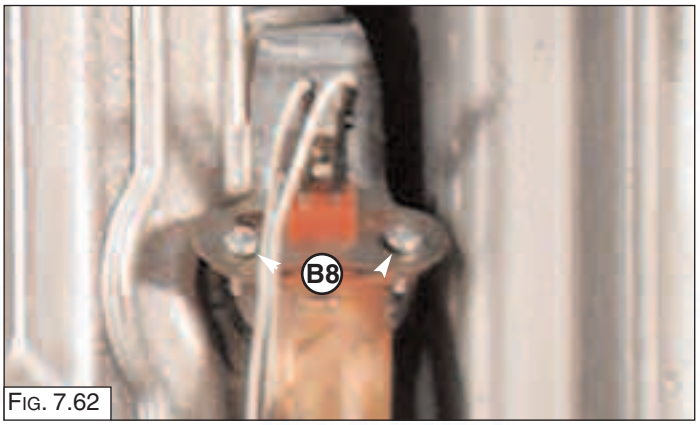

Fig. 7.62

Fig. 7.63

## 7.6 Access to the Control System

### 7.6.1. Checking the Fuses

1. Remove the inspection cover of the PCB box (Fig. 7.64);
2. Remove the fuses by pushing and rotating fuse holders "B9" (Fig. 7.65).

Fig. 7.64

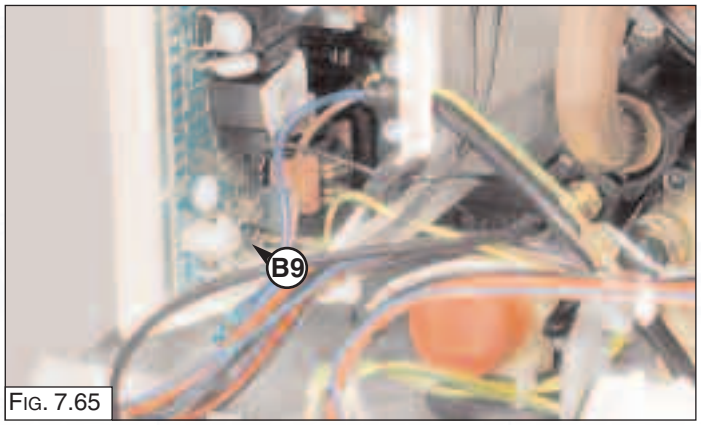


Fig. 7.65

### 7.6.2. Removing the P.C.B.s

1. Remove the inspection cover of the PCB box (Fig. 7.66);
2. Unplug all the electrical connections (Fig. 7.67);
3. Unscrew the screws "C1" (Fig. 7.67);
4. Pull forward the main PCB (Fig. 7.68);
5. Unscrew the screws "C2" (Fig. 7.69);
6. Remove the cover of the control panel (Fig. 7.70);
7. Unscrew the display P.C.B. mounting screws "C3" and disconnect the P.C.B. connection cable "C4" (Fig. 7.71);
8. Remove the display P.C.B. (Fig. 7.72);
9. Replace either P.C.B. in reverse order.

Fig. 7.66

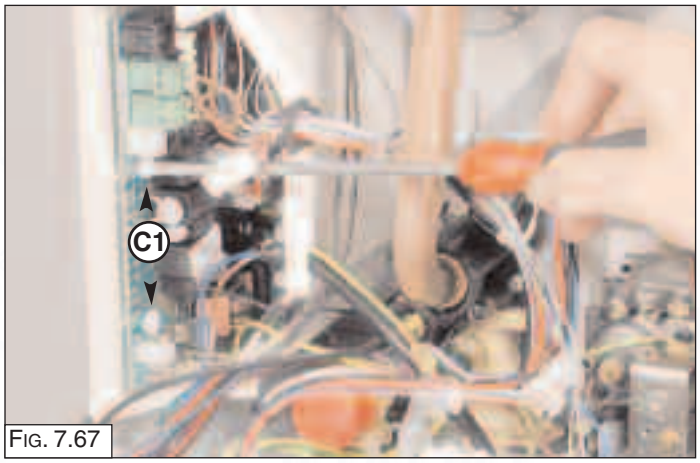


Fig. 7.67

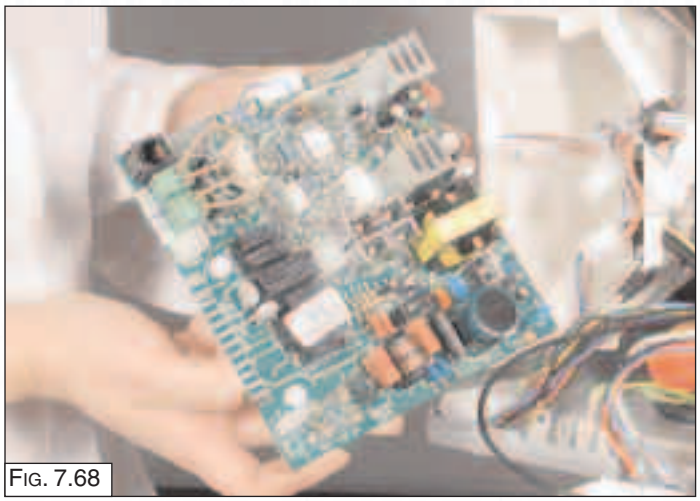

Fig. 7.68

FIG. 7.69

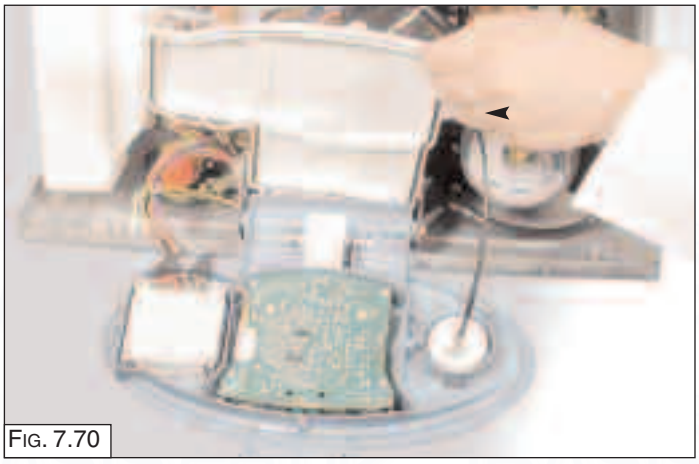
FIG. 7.70

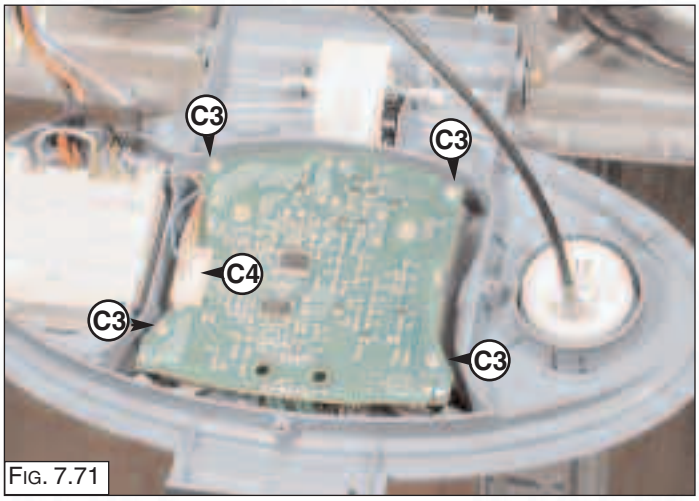

FIG. 7.71

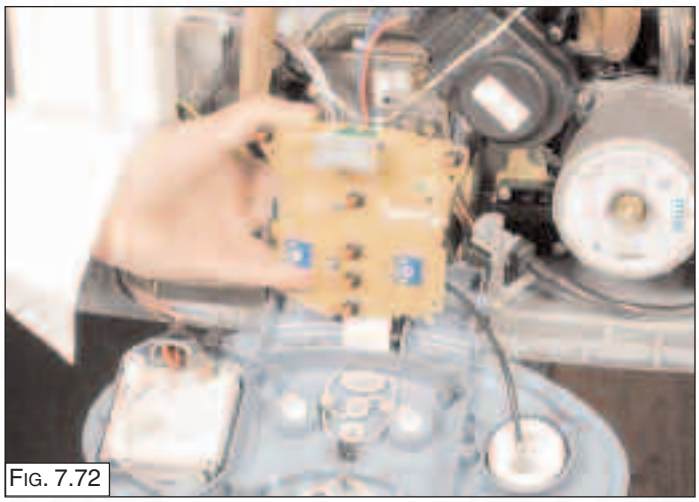
FIG. 7.72

### 7.6.3. REMOVING THE TIME CLOCK

1. Open the control panel (see the paragraph "*Removing the P.C.B.s*");
2. Unplug the electrical connection from the time clock and unscrew the four screws (FIG. 7.73);
3. Remove the time clock (FIG. 7.74).

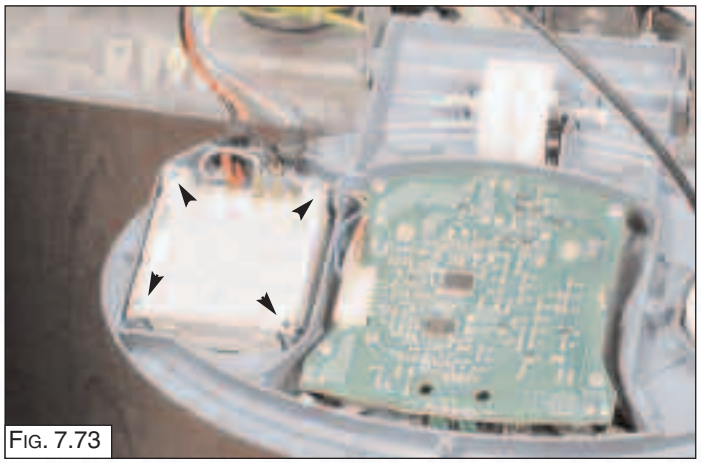
FIG. 7.73

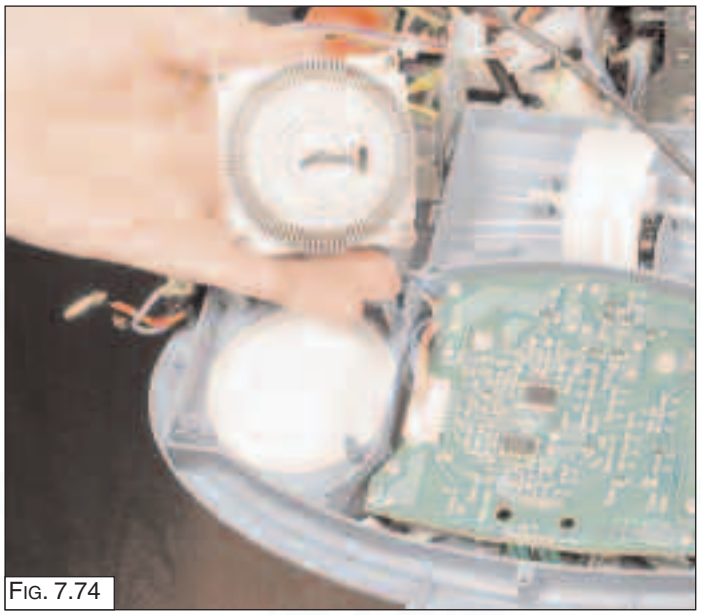
FIG. 7.74

# 8. FAULT FINDING

## 8.1. FAULT FINDING GUIDE (FLOW-CHARTS)

It is possible to detect and correct defects by using the standard fault finding diagrams described in this chapter.

***NOTE: THESE CHECKS ARE NOT EXHAUSTIVE***

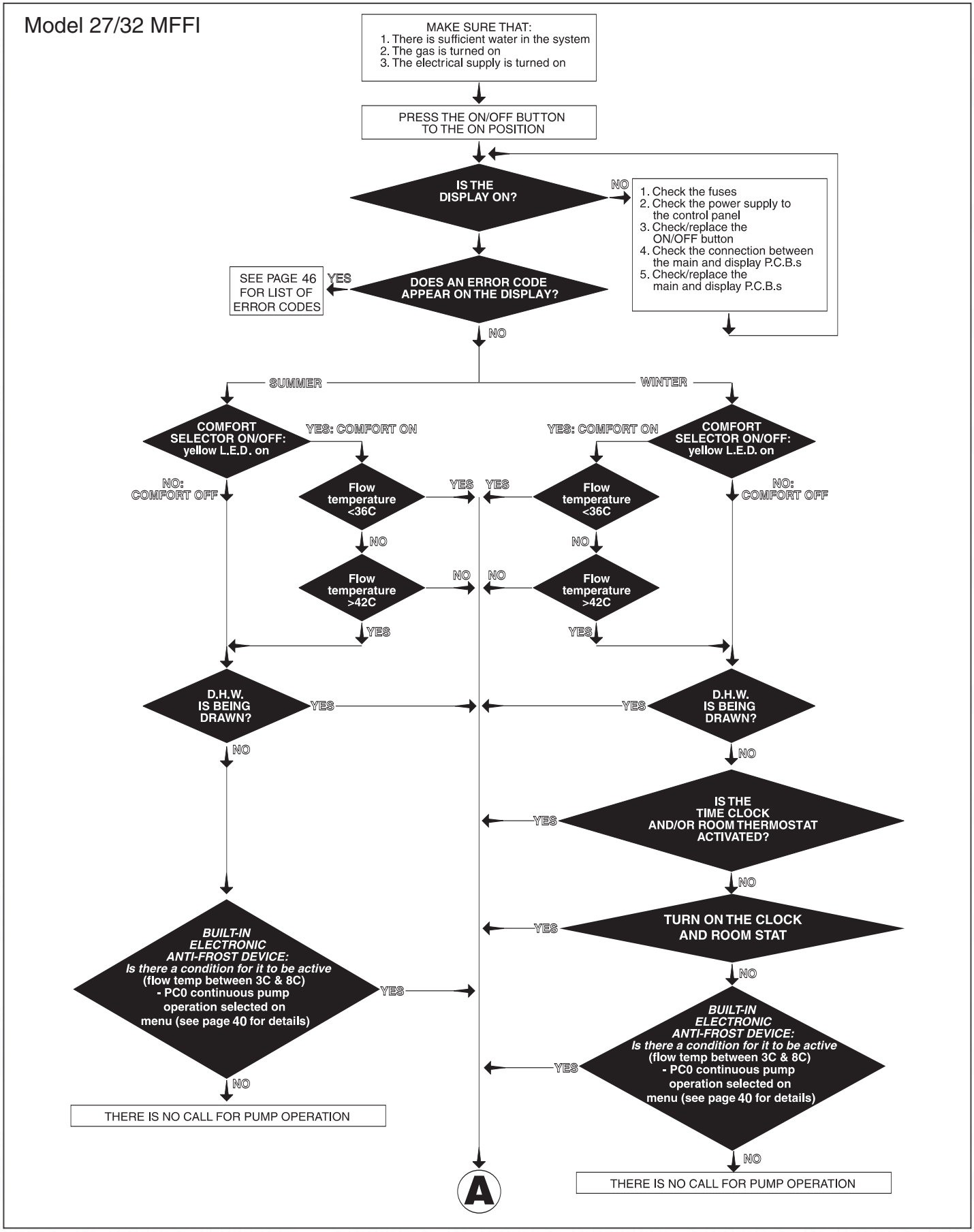

## Model 27/32 RFFI SYSTEM

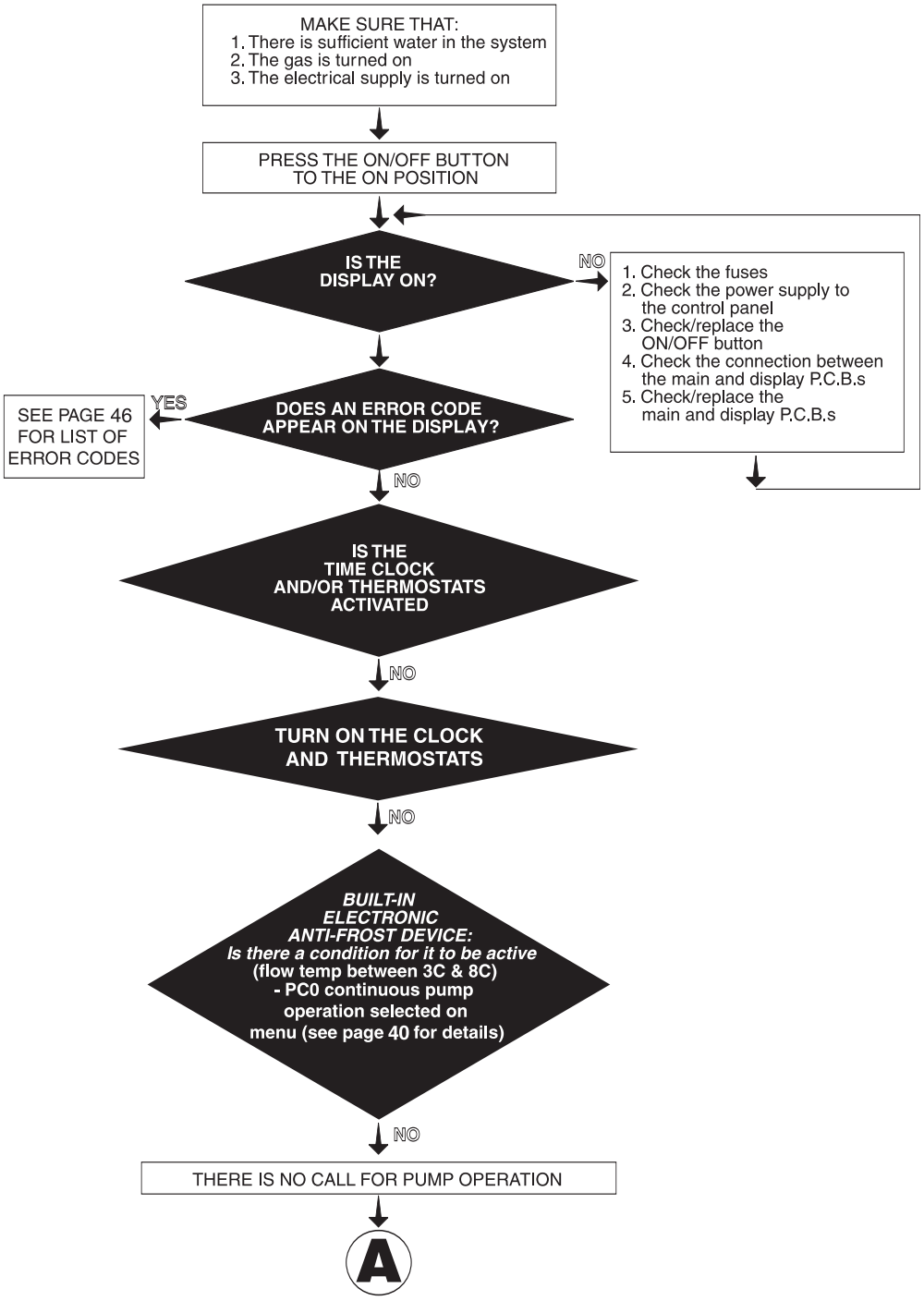

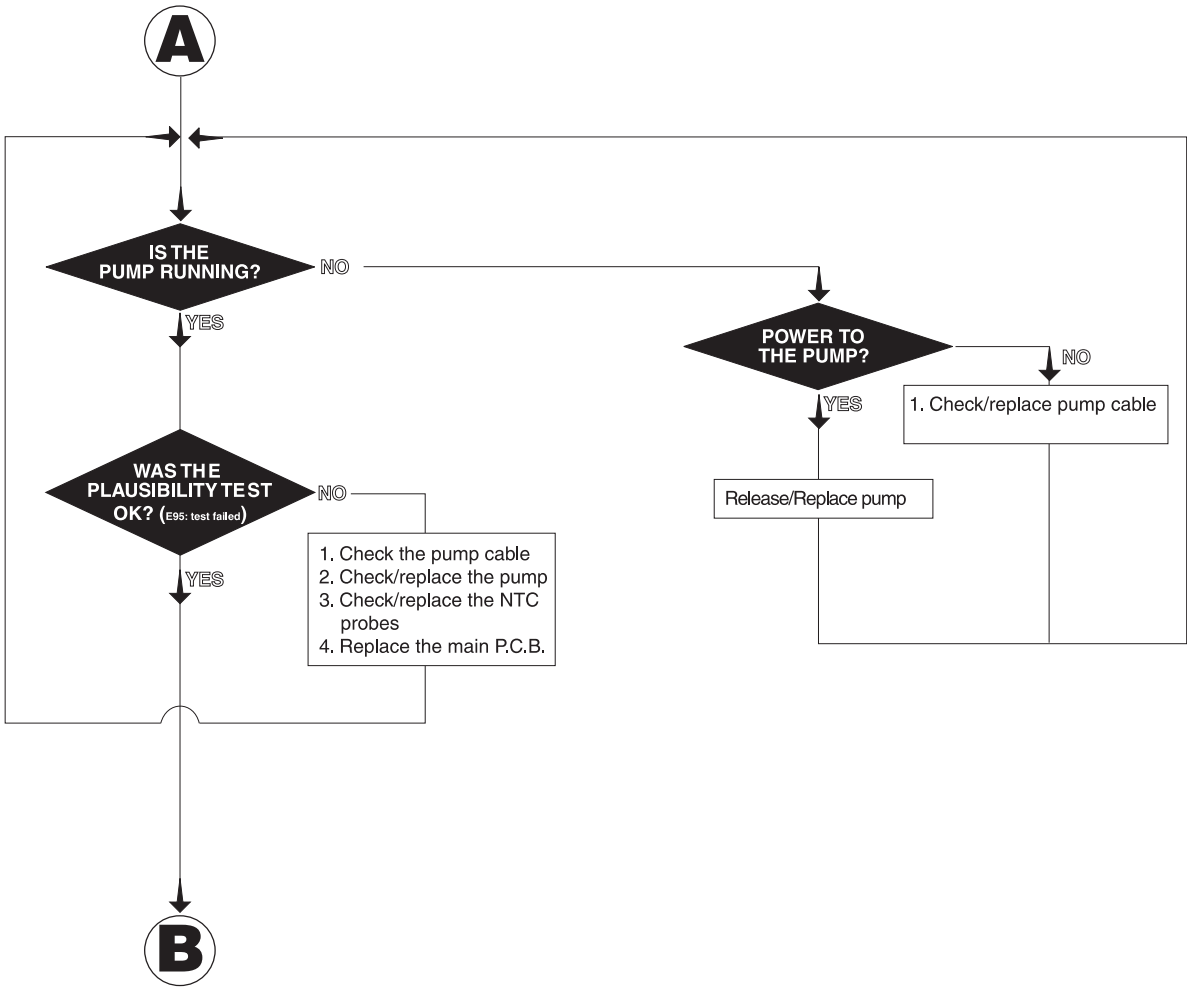
A
IS THE PUMP RUNNING?
NO
YES
POWER TO THE PUMP?
NO
YES
1. Check/replace pump cable
Release/Replace pump
WAS THE PLAUSIBILITY TEST OK? (E95: test failed)
NO
YES
1. Check the pump cable
2. Check/replace the pump
3. Check/replace the NTC probes
4. Replace the main P.C.B.
B

spares & parts online BASIS.co.uk

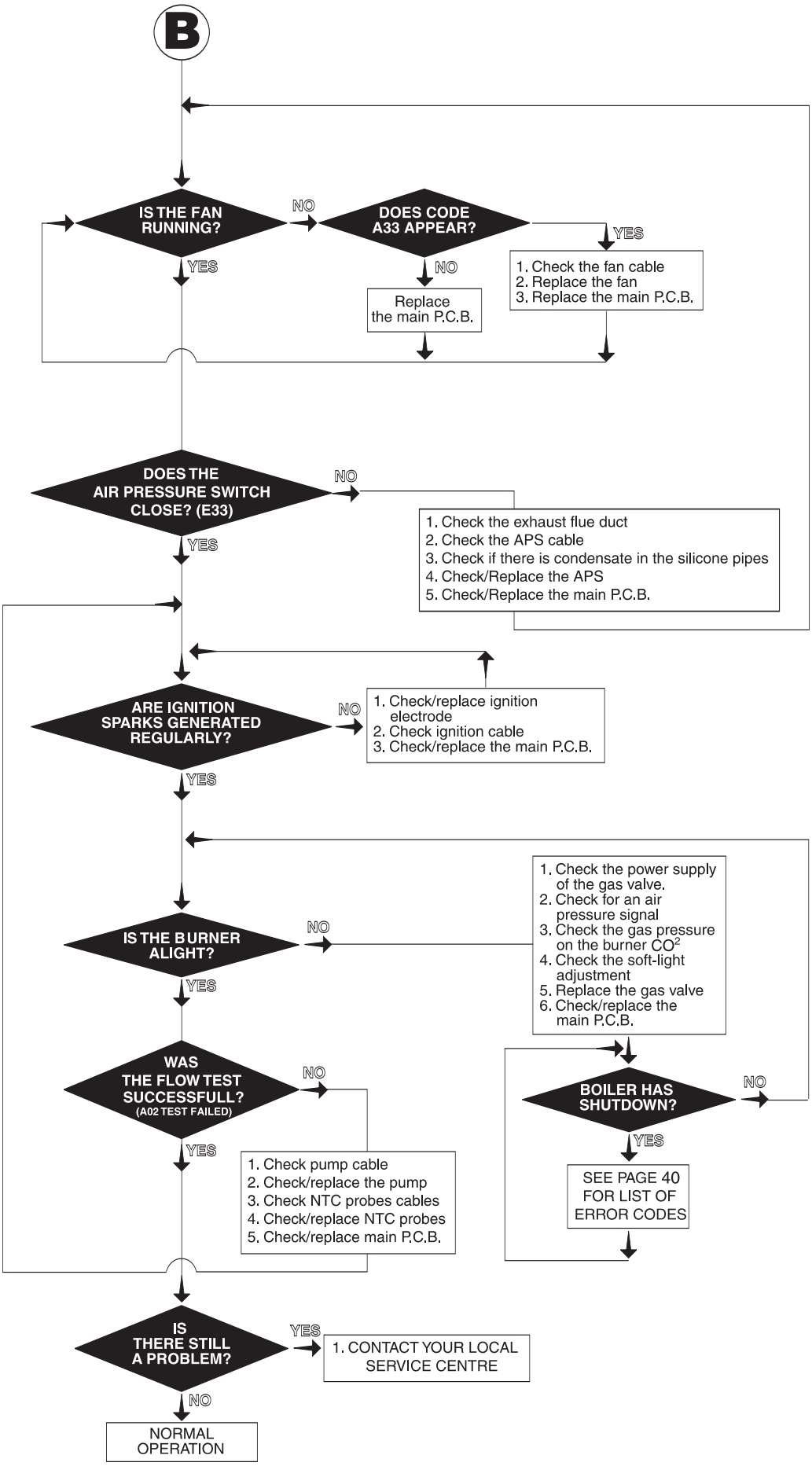

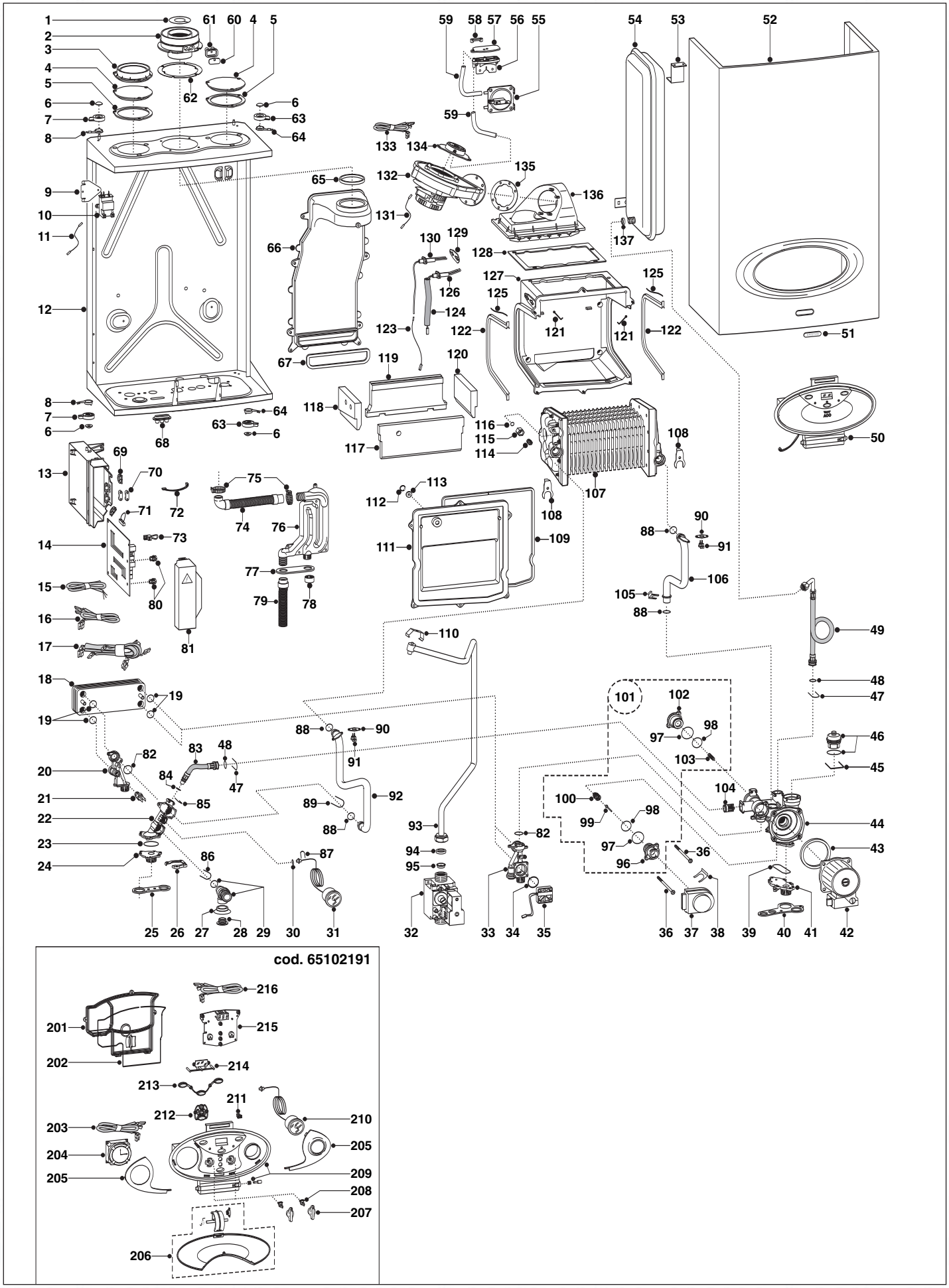
cod. 65102191

| Key no. | G.C. part no. | Description | ARISTON Part. No. |
|---|---|---|---|
| | | | |
| 1 | | Flue restrictor | 65102197 |
| 10 | | Spark generator | 65102177 |
| 14 | | Main P.C.B. | 65102236 |
| 18 | | Secondary heat exchanger (27 kW) | 990685 |
| 18 | | Secondary heat exchanger (32 kW) | 6510356 |
| 21 | | Temperature probe (DHW) | 998458 |
| 29 | | Safety valve (3bar) | 65103222 |
| 31 | | Pressure gauge | 65102220 |
| 32 | | Gas valve | 65102247 |
| 35 | | Flow switch (DHW) | 995948 |
| 37 | | Motor (3-way valve) | 997147 |
| 42 | | Pump | 65102902 |
| 46 | | Automatic air vent | 995865 |
| 54 | | Expansion vessel | 995940 |
| 55 | | Air pressure switch | 65102232 |
| 75 | | Hose clip | 990662 |
| 90 | | Retaining clip (NTC CH) | 65101007 |
| 91 | | NTC (CH) | 990405 |
| 101 | | Repair kit (3-way valve) | 65101288 |
| 107 | | Main exchanger (27 KW) | 65103211 |
| 107 | | Main exchanger (32 KW) | 65103219 |
| 125 | | Ignition electrode | 65102198 |
| 129 | | Detection electrode | 65102199 |
| 131 | | Fan | 65102248 |
| 135 | | Burner (27kW) | 65103221 |
| 135 | | Burner (32kW) | 65103220 |
| 203 | | Cable (Mechanical Time Clock) | 65102188 |
| 204 | | Mechanical Time Clock | 999599 |
| 215 | | Display P.C.B. | 65102235 |
| 216 | | Cable (Display P.C.B.) | 65102185 |
| 109 | | Combustion Chamber Seal and Grease | 65102217 |
| | | | |

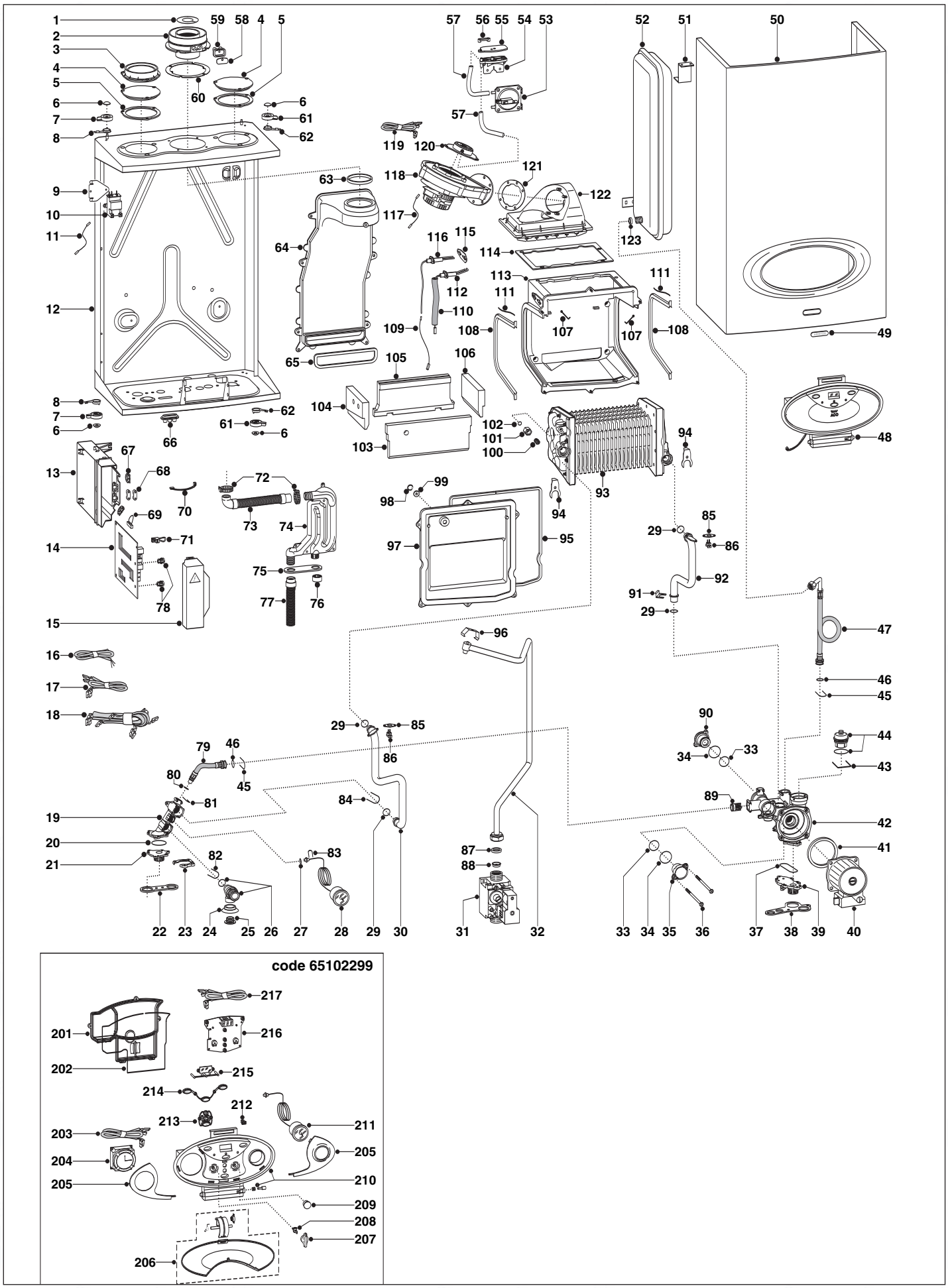
code 65102299

| Key no. | G.C. part no. | Description | ARISTON Part. No. |
|---|---|---|---|
| | | | |
| 1 | | Flue restrictor | 65102196 |
| 10 | | Spark generator | 65102177 |
| 14 | | Main P.C.B. | 65102236 |
| 26 | | Safety valve (3bar) | 65103222 |
| 28 | | Pressure gauge | 65102220 |
| 31 | | Gas valve | 65102247 |
| 39 | | Pump | 65102902 |
| 43 | | Automatic air vent | 995865 |
| 52 | | Expansion vessel | 995940 |
| 53 | | Air pressure switch | 65102232 |
| 74 | | Hose clip | 990662 |
| 89 | | Retaining clip (NTC CH) | 65101007 |
| 88 | | NTC (CH) | 990405 |
| 93 | | Main exchanger (27 KW) | 65103211 |
| 93 | | Main exchanger (32 KW) | 65103219 |
| 115 | | Ignition electrode | 65102198 |
| 118 | | Detection electrode | 65102199 |
| 120 | | Fan | 65102248 |
| 123 | | Burner (27kW) | 65103221 |
| 123 | | Burner (32kW) | 65103220 |
| 216 | | Display P.C.B. | 65102235 |
| 217 | | Cable (Display P.C.B.) | 65102185 |
| 98 | | Combustion Chamber Seal and Grease | 65102217 |
| | | | |
| | | | |
| | | | |

# 10. ANNUAL MAINTENANCE CHECKLIST

To ensure that the five year guarantee applies, the following checks must be carried out once a year and the service history completed in the Service Interval Record (Section 12, page 79) by a CORGI registered engineer:

1. Visually check the appliance for correct installation;
2. Check the appliance for the correct operation;
3. Check the flue and flue installation for correct siting, installation and that it is in good condition.;
4. Remove the casing as described in Section 7.2;
5. Check the operation of the safety devices:
   - Air Pressure Switch;
   - Overheat Thermostat;
   - Safety Valve;
   - Low Water Pressure Switch;
   - Ionisation (Flame Detection);
6. Drain the boiler and check the pressure in the expansion vessel, ensuring it is 0.7 bar;
7. Remove, clean and refill the condensate trap and condensate hoses (see Section 7.3.6 and 7.3.7), check the drain system for correct discharge of condensate and clean if necessary;
8. Remove and clean the DHW flow switch;
9. Remove and clean the fan;
10. Remove and clean the electrodes with an emery cloth;
11. Remove and clean the burner;
12. Check and clean the primary heat exchanger as necessary;
13. Refill the boiler and check the following;
14. Check all electronic operation parameters are correct (see Section 3.6);
15. Check gas inlet pressure and correct working pressure;
16. Check the $CO_2$ (see Section 3.6.3) and adjust as necessary;
17. Check the gas rate;
18. Check the correct operations of the timeclock and room thermostat;
19. Check the DHW flow rates;
20. Advise the customer on the correct use of the appliance (clock setting and operation, repressurising etc.);
21. Complete the necessary paperwork, Service Interval Record (page 79, Section 12) and Annual Maintenance Checklist.

spares & parts online
IBASIS.co.uk®

spares & parts online BASIS.co.uk

# 11. BENCHMARK COMMISSIONING CHECKLIST

**BENCHMARK No.** | | | | | | |

benchmark™ COLLECTIVE MARK

## GAS BOILER COMMISSIONING CHECKLIST

**BOILER SERIAL No.** _____ **NOTIFICATION No.** _____

**CONTROLS** *To comply with the Building Regulations, each section must have a tick in one or other of the boxes*

| | | | | |
|---|---|---|---|---|
| TIME & TEMPERATURE CONTROL TO HEATING | ROOM T/STAT & PROGRAMMER/TIMER | ☐ | PROGRAMMABLE ROOMSTAT | ☐ |
| TIME & TEMPERATURE CONTROL TO HOT WATER | CYLINDER T/STAT & PROGRAMMER/TIMER | ☐ | COMBI BOILER | ☐ |
| HEATING ZONE VALVES | FITTED | ☐ | NOT REQUIRED | ☐ |
| HOT WATER ZONE VALVES | FITTED | ☐ | NOT REQUIRED | ☐ |
| THERMOSTATIC RADIATOR VALVES | FITTED | ☐ | | |
| AUTOMATIC BYPASS TO SYSTEM | FITTED | ☐ | NOT REQUIRED | ☐ |

### FOR ALL BOILERS CONFIRM THE FOLLOWING

THE SYSTEM HAS BEEN FLUSHED IN ACCORDANCE WITH THE BOILER MANUFACTURER'S INSTRUCTIONS? ☐

THE SYSTEM CLEANER USED

THE INHIBITOR USED

### FOR THE CENTRAL HEATING MODE, MEASURE & RECORD

| | | | | |
|---|---|---|---|---|
| GAS RATE | | $m^3/hr$ | | $ft^3/hr$ |
| BURNER OPERATING PRESSURE (IF APPLICABLE) | ☐ | N/A | | mbar |
| CENTRAL HEATING FLOW TEMPERATURE | | | | °C |
| CENTRAL HEATING RETURN TEMPERATURE | | | | °C |

### FOR COMBINATION BOILERS ONLY

HAS A WATER SCALE REDUCER BEEN FITTED? YES ☐ NO ☐

WHAT TYPE OF SCALE REDUCER HAS BEEN FITTED?

### FOR THE DOMESTIC HOT WATER MODE, MEASURE & RECORD

| | | | | |
|---|---|---|---|---|
| GAS RATE | | $m^3/hr$ | | $ft^3/hr$ |
| MAXIMUM BURNER OPERATING PRESSURE (IF APPLICABLE) | ☐ | N/A | | mbar |
| COLD WATER INLET TEMPERATURE | | | | °C |
| HOT WATER OUTLET TEMPERATURE | | | | °C |
| WATER FLOW RATE | | | | lts/min |

### FOR CONDENSING BOILERS ONLY CONFIRM THE FOLLOWING

THE CONDENSATE DRAIN HAS BEEN INSTALLED IN ACCORDANCE WITH THE MANUFACTURER'S INSTRUCTIONS? YES ☐

### FOR ALL INSTALLATIONS CONFIRM THE FOLLOWING

THE HEATING AND HOT WATER SYSTEM COMPLIES WITH CURRENT BUILDING REGULATIONS ☐

THE APPLIANCE AND ASSOCIATED EQUIPMENT HAS BEEN INSTALLED AND COMMISSIONED IN ACCORDANCE WITH THE MANUFACTURER'S INSTRUCTIONS ☐

IF REQUIRED BY THE MANUFACTURER, HAVE YOU RECORDED A $CO/CO_2$ RATIO READING? N/A ☐ YES _____ $CO/CO_2$ RATIO

THE OPERATION OF THE APPLIANCE AND SYSTEM CONTROLS HAVE BEEN DEMONSTRATED TO THE CUSTOMER ☐

THE MANUFACTURER'S LITERATURE HAS BEEN LEFT WITH THE CUSTOMER ☐

**COMMISSIONING ENG'S NAME** PRINT _____ CORGI ID No. _____

SIGN _____ DATE _____

# SERVICE INTERVAL RECORD

It is recommended that your heating system is serviced regularly
and that you complete the appropriate Service Interval Record Below.

**Service Provider.** Before completing the appropriate Service Interval Record below, please ensure you have carried out the service as described in the boiler manufacturer's instructions. Always use the manufacturer's specified spare part when replacing all controls

**SERVICE 1** DATE
ENGINEER NAME
COMPANY NAME
TEL No.
CORGI ID CARD SERIAL No.
COMMENTS
SIGNATURE

**SERVICE 2** DATE
ENGINEER NAME
COMPANY NAME
TEL No.
CORGI ID CARD SERIAL No.
COMMENTS
SIGNATURE

**SERVICE 3** DATE
ENGINEER NAME
COMPANY NAME
TEL No.
CORGI ID CARD SERIAL No.
COMMENTS
SIGNATURE

**SERVICE 4** DATE
ENGINEER NAME
COMPANY NAME
TEL No.
CORGI ID CARD SERIAL No.
COMMENTS
SIGNATURE

**SERVICE 5** DATE
ENGINEER NAME
COMPANY NAME
TEL No.
CORGI ID CARD SERIAL No.
COMMENTS
SIGNATURE

**SERVICE 6** DATE
ENGINEER NAME
COMPANY NAME
TEL No.
CORGI ID CARD SERIAL No.
COMMENTS
SIGNATURE

**SERVICE 7** DATE
ENGINEER NAME
COMPANY NAME
TEL No.
CORGI ID CARD SERIAL No.
COMMENTS
SIGNATURE

**SERVICE 8** DATE
ENGINEER NAME
COMPANY NAME
TEL No.
CORGI ID CARD SERIAL No.
COMMENTS
SIGNATURE

**SERVICE 9** DATE
ENGINEER NAME
COMPANY NAME
TEL No.
CORGI ID CARD SERIAL No.
COMMENTS
SIGNATURE

**SERVICE 10** DATE
ENGINEER NAME
COMPANY NAME
TEL No.
CORGI ID CARD SERIAL No.
COMMENTS
SIGNATURE

# Terms and Conditions of Guarantee

Please read these terms and conditions which are in addition to any terms and conditions detailed in this book or any registration card supplied with your appliance.

**A charge will be made to the owner of the appliance if:**

The reason for any service visit is as a direct result of a failure to install the appliance in accordance with the manufacturer's instructions.

Your installer does not complete the necessary commissioning process and procedure as detailed in the Installation and Operating Instructions.

Your appliance is not serviced on or before the 12 month anniversary of installation - this only applies to appliances with a 2 and 5 year guarantee.

Our service engineer calls as requested and the failure is a non-manufacturing defect.

Failure to pay an invoice for any such occurence **will** be assumed by MTS that you accept that your appliance has not been installed correctly and understand that any manufacturer's guarantee has been withdrawn.

On the 12 month anniversary of the appliance installation, you must have it serviced to continue any guarantee offered into the following year. Failure to do so **will** invalidate your guarantee and should an MTS engineer be required to attend and no proof of service documentation is made available, then MTS **will** charge.

As part of the commissioning process, it is a legal requirement to register all boiler installations or replacements with CORGI. Upon registration a "Certification Number" will be issued followed by a "Declaration of Safety" Certificate. MTS (GB) Ltd cannot be called upon to carry out any work under the manufacturer's guarantee without proof of registration. The registration number must be quoted when requesting a service visit, and the "Declaration of Safety" Certficate subsequently shown to the service engineer.

If the certificate is not made available, the engineer will not work on the appliance and a wasted call charge will be made.

If you have a problem with commissioning on installation, please contact our

**Technical Department on 0870 241 8180**

Manufacturer: **Merloni TermoSanitari SpA - Italy**

Commercial subsidiary: **MTS (GB) Limited,** MTS Building, Hughenden Avenue, High Wycombe, Bucks HP13 5FT

099841832212 b - 03/2005

MTS are continuously improving their products and therefore reserve the right to change specifications without prior notice and accepts no liability for any errors or omission in the information contained in this document.