ARISTON

Installation and Servicing Instructions

# CLAS 24/30
# CLAS SYSTEM 21/28

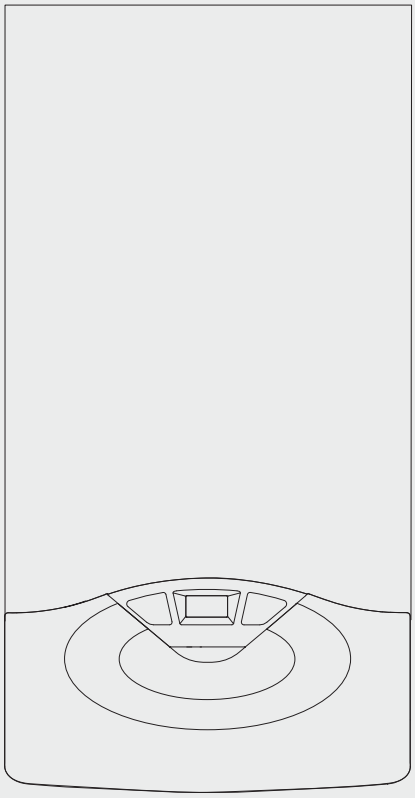

WALL HUNG GAS BOILER
TYPE C

LEAVE THESE INSTRUCTIONS
WITH THE END-USER

**CLAS 24 FF**
**CLAS 30 FF**
**CLAS SYSTEM 21 FF**
**CLAS SYSTEM 28 FF**

G.C.N: 47-116-59 (24KW)
G.C.N: 47-116-61 (30KW)

G.C.N: 41-116-27 (21KW)
G.C.N: 41-116-28 (28KW)

**INDEX**


**General Information** ... 3
General Information ... 3
Control Panel ... 4
Overall wiew ... 5
Technical Information ... 6

**Installation** ... **8**
Reference Standards ... 8
Sitting the appliance ... 8
Overall dimensions ... 9
Clearences ... 9
Monting the appliance ... 10
Electrical connection ... 10
Gas Connection ... 11
Water connection ... 11
Pipe work ... 11
By-pass ... 11
System design ... 11
Drain Cocks ... 11
Safety valve discharge ... 12
Air release points ... 12
Main water feed - Central Heating ... 12
Domestic Water ... 12
Flue connection ... 13
Fitting the coaxial flue ... 14
Fitting 80/125 Flue ... 15
Fitting the flue (Twin pipe) ... 17
Electrical connection ... 21
Peripheral unit connection ... 21
Room Thermostat connection ... 22
Outdoor sensor connection ... 22
Wiring Diagram for connection to an open Vented Cylinder ... 23
Wiring Diagram for connection to an MTS Vented Cylinder ... 24
Electrical diagram ... 25
Water circuit diagram ... 27

**Commissioning** ... **28**
Ignition preparation ... 28
Initial start-up ... 28
De-aeration cycle ... 28
Checking the gas settings ... 29
Supply working pressure check ... 29
Checking the maximum power ... 29
Checking the minimum power ... 29
Checking the maximum c.h. power ... 30
Soft Light adjustment ... 30
Ignition Delay adjustment ... 30
Adjustment the Maximum absolute Heating power ... 30
Gas table ... 31
Gas changeover ... 31
Auto function ... 32

**Boiler protection devices** ... **33**
Safety shut-off ... 33
Shutdown ... 33
Malfunction warning ... 33
Table summarising error codes ... 33
Anti-frost device ... 34
Combustion Analysis ... 34
Product of combustion Discharge Monitoring ... 34
Flue test mode ... 34

**settings - adjustment - problem identification menus** ... **35**
Menu 2 - Boiler parameter ... 36
Menu 3 - Boiler with storage and boiler with solar kit ... 37
Menu 4 - Zone 1 parameter ... 38
Menu 5 - Zone 2 parameter ... 39
Menu 7 - Test & Utilities ... 40
Menu 8 - Service Parameter ... 40

**Maintenance** ... **42**
General comments ... 42
Operational test ... 42
Draining procedures ... 42
Draining the D.H.W. system and indirect cylinder ... 42
Draining the System ... 43
Completion ... 43
Operational Checks ... 43
Instructing the end user ... 43

**Maintenance Guide** ... **44**
General access ... 44
Electrical unit ... 45
Control box access ... 45
Fuse ... 45
Main P.C.B. ... 46
Display P.C.B. ... 46
Hydraulic unit ... 47
Richt hand hydraulic block assembly ... 47
3 way valve ... 48
Draining ... 48
Automatic air vent ... 49
Primary water pressure sensor ... 49
Pump ... 50
C.H. Filter ... 50
D.H.W. flow switch assembly ... 51
Left hand hydraulic block assembly ... 52
D.H.W. Temperature sensor ... 53
Safety valve ... 53
By-pass assmbly ... 54
Seconday exchanger ... 54
Temperature sensor & overheat thermostat ... 55
Main heat exchanger ... 56
Burner unit ... 57
Spark generator ... 58
Elctrodes assembly ... 58
Burner ... 59
Manifold ... 59
Fun ... 60
Air pressure switch ... 60
Gas valve ... 61
Annual Maintenance ... 62

**Short List** ... 63

**Benchmark - Gas boiler commissioning checklist** ... 65

This manual is an integral and essential part of the product. It should be kept with the appliance so that it can be consulted by the user and our authorised personnel.

Please carefully read the instructions and notices about the unit contained in this manual, as they provide important information regarding the safe installation, use and maintenance of the product.

For operating instructions please consult the separate Users Manual.

**General Instructions**

Read the instructions and recommendations in these Installation and Servicing Instructions carefully to ensure proper installation, use and maintenance of the appliance.

Keep this manual in a safe place. You may need it for your own reference while Servicing Technicians or your installer may need to consult it in the future.

The CLAS FF is a combined appliance for the production of central heating (C.H.) and domestic hot water (D.H.W. - FF models).

The CLAS FF SYSTEM is a system boiler designed for the production of (C.H.) only.

These appliances are for domestic use only and must be used only for the purpose for which they have been designed.

The manufacturer declines all liability for damage caused by improper or negligent use.

No asbestos or other hazardous materials have been used in the fabrication of this product.

Before connecting the appliance, check that the information shown on the data plate and the table in section 7 comply with the electric, water and gas mains of the property. You will find the data plate on the reverse of the control panel.
The gas with which this appliance operates is also shown on the label at the bottom of the boiler.

Do not install this appliance in a damp environment or close to equipment which spray water or other liquids.
Do not place objects on the appliance.
Do not allow children or inexperienced persons to use the appliance without supervision.

If you smell gas in the room, do not turn on or off light switches, use the telephone or any other object which might cause sparks.
Open doors and windows immediately to ventilate the room.
Shut the gas mains tap (at or adjacent to the gas meter) or the valve of the gas cylinder and call your Gas Supplier immediately.

Always disconnect the appliance either by unplugging it from the mains or turning off the mains switch before cleaning the appliance or carrying out maintenance.

In the case of faults or failure, switch off the appliance and turn off the gas tap. Do not tamper with the appliance.
For repairs, call your local Authorised Servicing Agent and request the use of original spare parts. For in-guarantee repairs contact MTS (GB) Limited.

**CLAS 24 FF**
**CLAS 30 FF**

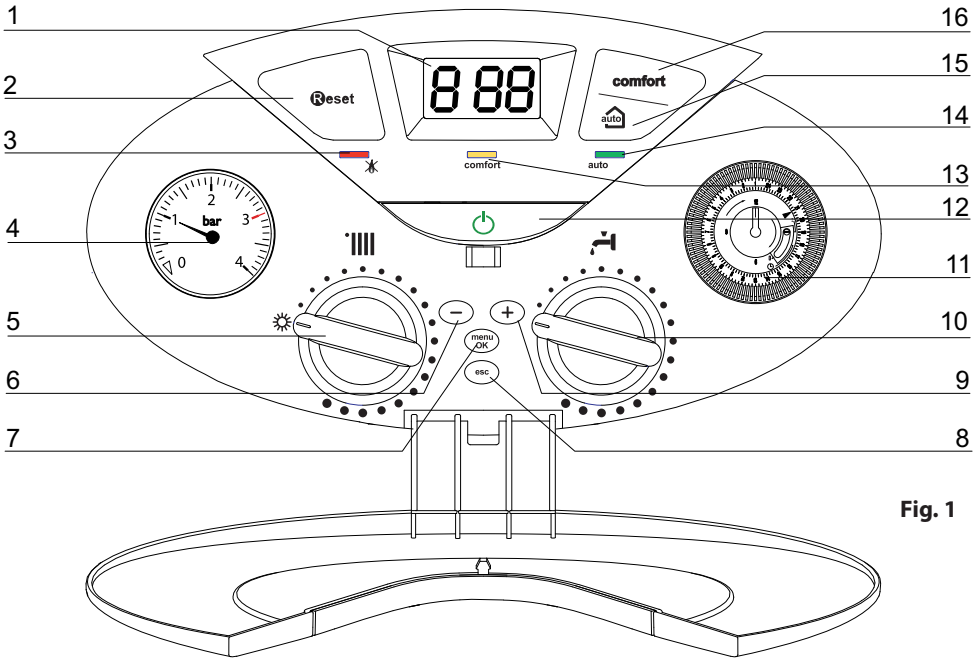


**Fig. 1**

Legend

1. Display
2. RESET button
3. Red LED (illuminated = boiler lockout)
4. Heating System Pressure Gauge
5. Selector knob for Summer/Winter Central Heating Temperature Adjustment Knob
6. Programming "-" key
7. MENU/OK button
8. ESC button
9. Programming "+" key
10. Domestic Hot Water adjustment knob (COMBI models)
11. Time clock (optional)
12. ON/OFF Switch
13. "COMFORT" Function L.E.D (COMBI models)
    Heating only L.E.D (SYSTEM models)
14. Green led (auto function activate)
15. AUTO button (to active Thermoregulation)
16. COMFORT button (COMBI models)
    Heating only button (SYSTEM models)

**CLAS SYSTEM 21 FF**
**CLAS SYSTEM 28 FF**

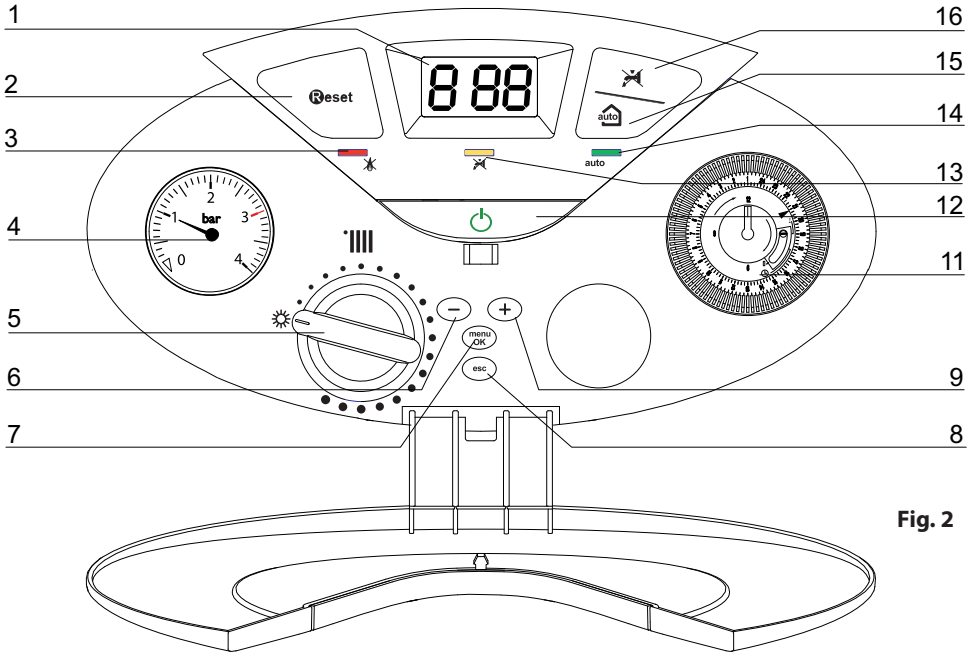


**Fig. 2**

## Overall wiew

**CLAS 24/30 FF**

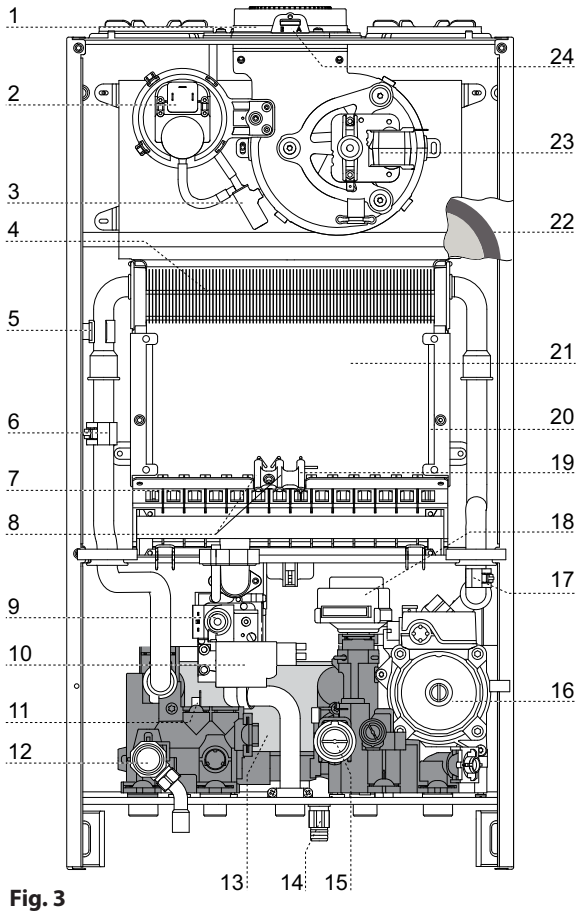


**Fig. 3**

**CLAS SYSTEM 21/28 FF**

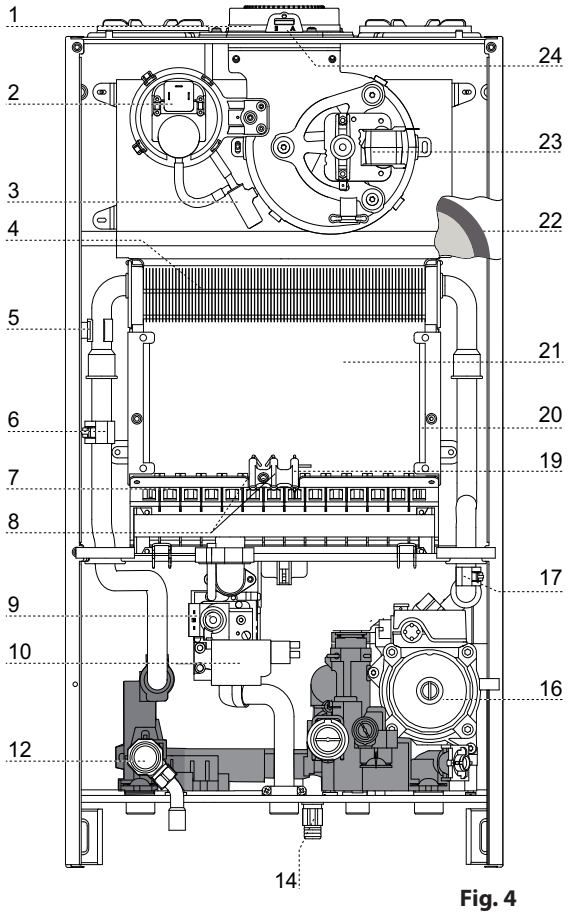


**Fig. 4**

**Legend**

1. Flue connector
2. Air pressure switch
3. Condensate trap
4. Main Heat Exchanger
5. Overheat thermostat
6. Flow temperature probe
7. Burner
8. Ignition electrodes
9. Gas valve
10. Spark generator
11. D.H.W. temperature probe
12. Safety valve (3 bar)
13. Secondary heat exchanger
14. Drain valve
15. D.H.W. Flow switch
16. Circulation Pump with air release valve
17. Water pressure sensor
18. Diverter valve
19. Detection Electrode
20. Combustion Chamber Insulation Panel
21. Combustion Chamber
22. Expansion vessel
23. Fan
24. Combustion Analysis Test Point

## Technical Information

| | | | | |
|---|---|---|---|---|
| GEN. NOTES | Model Name | | **CLAS 24 FF** | **CLAS 30 FF** |
| | CE certification (pin) | | 1312BR4793 | 1312BR4793 |
| | Boiler type | | C12-C32-C42-C52-B22-B32 | |
| ELECTRICAL PERFORMANCE | Max/min nominal heat input(Hi) | kW | 25.8 / 11.0 | 30.0 / 13.0 |
| | Max/min nominal heat input (Hs) | kW | 28.7 / 12.2 | 33.3 / 14.4 |
| | Max/min nominal heat input for hot water (Hi) | kW | 27 / 11.0 | 31.3 / 13.0 |
| | Max/min nominal heat input for hot water (Hs) | kW | 30 / 12.2 | 34.8 / 14.4 |
| | Heat output: max/min | kW | 24.2 / 9.8 | 28.1 / 11.6 |
| | Heat output for hot water: max/min | kW | 26.2 / 9.8 | 29.5 / 11.6 |
| | Combustion efficiency (at flue) Hi/Hs | % | 95.0 | 93.9 |
| | Gross efficiency of nominal heat input (60/80 °C) Hi/Hs | % | 94.8 / 84.5 | 93.6 / 84.3 |
| | Gross efficiency at 30 % at 47°C Hi/Hs | % | 93.6 / 84.3 | 93.2 / 83.9 |
| | Gross efficiency at minimum power Hi/Hs | % | 89.2 / 80.3 | 89.3 / 80.4 |
| | Number of efficiency stars (Directive 92/42/EEC) | stars | *** | *** |
| | Rating Sedbuk Band / % | class | D | D |
| | Ma. heat loss to the casing (ΔT = 50°C) | % | 0.4 | 0.3 |
| | Heat loss through the flue when burner on | % | 5.0 | 6.1 |
| | Heat loss through the flue when burner off | % | 0.4 | 0.4 |
| EMISSIONS IN C.H. | Residual discharge head | Pa | 100 | 104 |
| | Nox class | class | 3 | 3 |
| | Flue fumes temperature (G20) | °C | 98 | 114 |
| | CO2 content$_2$ (G20) | % | 6.6 | 6.4 |
| | CO content (0 %0$_2$) | ppm | 40 | 92 |
| | O2 content2 (G20) | % | 8.7 | 8.9 |
| | Max Discharge of Products of Combustion (G20) | kg/h | 97 | 67.5 |
| | Excess air | % | 62.8 | 74 |
| HEATING CIRCUIT | Load losses water side (max) ΔT=20°C | mbar | 200 | 200 |
| | Residual head for the system | bar | 0.25 | 0.25 |
| | Expansion vessel pre-charged pressure | bar | 1 | 1 |
| | Maximum central heating circuit pressure | bar | 3 | 3 |
| | Expansion vessel capacity | l | 8 | 8 |
| | Central heating temperature: max/min (Approx) | °C | 85 / 35 | 85 / 35 |
| DOMESTIC HOT WATER CIRCUIT | Domestic hot water temperature max/min (Approx) | °C | 60 / 36 | 60 / 36 |
| | Specific flow rate of domestic hot water system (10 min. with ΔT=30°C)) instant boilers | l/min | 12.5 | 14.1 |
| | D.H.W. flow rate ΔT=25°C | l/min | 15.0 | 16.9 |
| | D.H.W. flow rater ΔT=35°C | l/min | 10.7 | 12.1 |
| | Hot water comfort stars (EN13203) | stars | 3 | 3 |
| | D.H.W. minimum flow rate | l/min | 1.7 | 1.7 |
| | Domestic hot water pressure max | bar | 7 | 7 |
| ROOMELECTRICAL DATA | Power supply voltage/frequency | V/Hz | 230/50 | 230/50 |
| | Power consumption | W | 127 | 136 |
| | Minimum operating room temperature | °C | +5 | +5 |
| | Electric system grades of protection | IP | X5D | X5D |
| | Weight | kg | 31 | 31 |
| | Dimensions (W x H x D) : | mm | 400/770/315 | 400/770/315 |

| | | | | |
|---|---|---|---|---|
| GEN. NOTES | Model Name | | **CLAS SYSTEM 21 FF** | **CLAS SYSTEM 28 FF** |
| | CE certification (pin) | | 1312BR4793 | 1312BR4793 |
| | Boiler type | | C12-C32-C42-C52-B22-B32 | |
| ELECTRICAL PERFORMANCE | Max/min nominal heat input(Hi) | kW | 25.8 / 11.0 | 30.0 / 13.0 |
| | Max/min nominal heat input (Hs) | kW | 28.7 / 12.2 | 33.3 / 14.4 |
| | Max/min nominal heat input for hot water (Hi) | kW | 27 / 11.0 | 31.3 / 13.0 |
| | Max/min nominal heat input for hot water (Hs) | kW | 30 / 12.2 | 34.8 / 14.4 |
| | Heat output: max/min | kW | 24.2 / 9.8 | 28.1 / 11.6 |
| | Combustion efficiency (at flue) Hi/Hs | % | 95.0 | 93.9 |
| | Gross efficiency of nominal heat input (60/80 °C) Hi/Hs | % | 94.8 / 84.5 | 93.6 / 84.3 |
| | Gross efficiency at 30 % at 47°C Hi/Hs | % | 93.6 / 84.3 | 93.2 / 83.9 |
| | Gross efficiency at minimum power Hi/Hs | % | 89.2 / 80.3 | 89.3 / 80.4 |
| | Number of efficiency stars (Directive 92/42/EEC) | stars | *** | *** |
| | Rating Sedbuk | class | D | D |
| | Ma. heat loss to the casing (ΔT = 50°C) | % | 0.4 | 0.3 |
| | Heat loss through the flue when burner on | % | 5.0 | 6.1 |
| | Heat loss through the flue when burner off | % | 0.4 | 0.4 |
| EMISSIONS IN C.H. | Residual discharge head | mbar | 100 | 104 |
| | Nox class | class | 3 | 3 |
| | Flue fumes temperature (G20) | °C | 98 | 114 |
| | CO2 content$_2$ (G20) | % | 6.6 | 6.4 |
| | CO content (0 %0$_2$) | ppm | 40 | 92 |
| | O2 content2 (G20) | % | 8.7 | 8.9 |
| | Max Discharge of Products of Combustion (G20) | Kg/h | 97 | 67.5 |
| | Excess air | % | 62.8 | 74 |
| HEATING CIRCUIT | Load losses water side (max) ΔT=20°C | mbar | 200 | 200 |
| | Residual head for the system | bar | 0.25 | 0.25 |
| | Expansion vessel pre-charged pressure | bar | 1 | 1 |
| | Maximum central heating circuit pressure | bar | 3 | 3 |
| | Expansion vessel capacity | l | 8 | 8 |
| | Central heating temperature: max/min | °C | 85 / 35 | 85 / 35 |
| DOMESTIC HOT WATER CIRCUIT | Domestic hot water temperature max/min (Approx) | °C | 60 / 36 | 60 / 36 |
| | | | | |
| | | | | |
| | | | | |
| | | | | |
| | | | | |
| | | | | |
| ROOM ELECTRICAL DATA | Power supply voltage/frequency | V/Hz | 230/50 | 230/50 |
| | Power consumption | W | 127 | 136 |
| | Minimum operating room temperature | °C | +5 | +5 |
| | Electric system grades of protection | IP | X5D | X5D |
| | Weight | kg | 31 | 31 |
| | Dimensions (W x H x D) : | mm | 400/770/315 | 400/770/315 |

**Reference Standards**
The technical information and instructions provided herein below are intended for the installer / Servicing Technician so that the unit may be installed and serviced correctly and safely.

In the United Kingdom the installation and initial start up of the boiler must be by a CORGI Registered Installer in accordance with the installation standards currently in effect, as well as with any and all local health and safety standards i.e. CORGI.

In the Republic of Ireland the installation and initial start up of the appliance must be carried out by a Competent Person in accordance with the current edition of I.S.813 "Domestic Gas Installations", the current Building Regulations, reference should also be made to the current ETCI rules for electrical installation.

This appliance must be installed by a competent installer in accordance with current Gas Safety (installation & use) Regulations.

The installation of this appliance must be in accordance with the relevant requirements of the Local Building Regulations, the current I.E.E. Wiring Regulations, the bylaws of the local water authority, in Scotland, in accordance with the Building Standards (Scotland) Regulation and Health and Safety document No. 635 "Electricity at work regulations 1989" and in the Republic of Ireland with the current edition of I.S. 813, the Local Building Regulations (IE).

C.O.S.H.H.

Materials used in the manufacture of this appliance are non-hazardous and no special precautions are required when servicing.

Installation should also comply with the following British Standard Codes of Practice

| | |
|---|---|
| **BS 7593:1992** | **Treatment of water in domestic hot water central heating systems** |
| **BS 5546:1990** | **Installation of hot water supplies for domestic purposes** |
| **BS 5440-1:2000** | **Flues** |
| **BS 5440-2:2000** | **Air supply** |
| **BS 5449:1990** | **Forced circulation hot water systems** |
| **BS 6798:1987** | **Installation of gas fired hot water boilers of rated input not exceeding 60kW** |
| **BS 6891:1989** | **Installation of low pressure gas pipe up to 28mm** |
| **BS 7671:2001** | **IEE wiring regulations** |
| **BS 4814:1990** | **Specification for expansion vessels** |
| **BS 5482:1994** | **Installation of L.P.G.** |

and in the Republic of Ireland in accordance with the following Codes of Practice:

| | |
|---|---|
| **I.S. 813** | **Domestic Gas Installations** |

**Siting the Appliance**
The appliance may be installed in any room or indoor area, although particular attention is drawn to the requirements of the current I.E.E. Wiring Regulations, and in Scotland, the electrical provisions of the Building Regulations applicable in Scotland, with respect to the installation of the combined appliance in a room containing a bath or shower, the location of the boiler in a room containing a bath or shower should only be considered if there is no alternative.

Where a room-sealed appliance is installed in a room containing a bath or shower the appliance and any electrical switch or appliance control, utilising mains electricity should be situated so that it cannot be touched by a person using the bath or shower, specifically in accordance with current IEE Wiring Regulations.

The location must permit adequate space for servicing and air circulation around the appliance as indicated on page 9.

The location must permit the provision of an adequate flue and termination.

For unusual locations special procedures may be necessary.
BS 6798-1987 gives detailed guidance on this aspect.
A compartment used to enclose the appliance must be designed specifically for this purpose. No specific ventilation requirements are needed for the installation within a cupboard.
This appliance is not suitable for outdoor installation.

The type C appliances (in which the combustion circuit, air vent intake and combustion chamber are air-tight with respect to the room in which the appliance is installed) can be installed in any type of room.

Secondary ventilation is not required with this boiler. The boiler must be installed on a solid, non-combustible, permanent wall to prevent access from the rear.

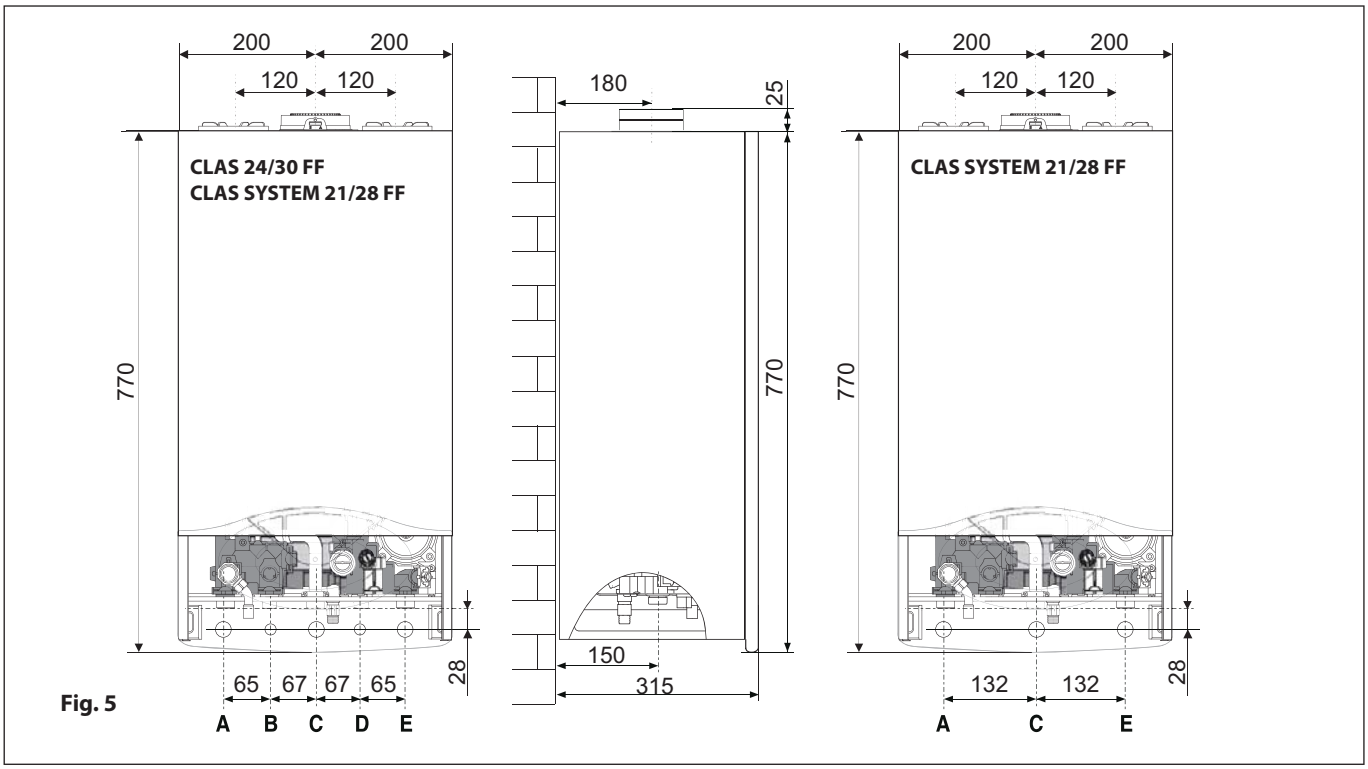


Fig. 5

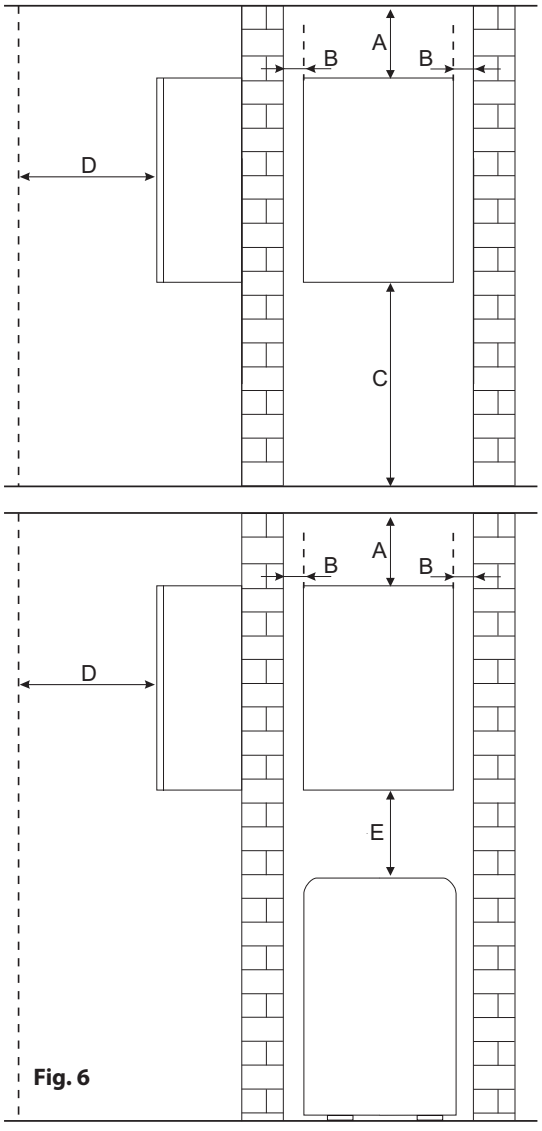


Fig. 6

## Overall Dimensions

Legend:

A = Central Heating Flow (22mm nut & olive)
B = Domestic Hot Water Outlet (15mm nut & olive)
C = Gas Inlet (15mm)
D = Domestic Cold Water Inlet (15mm nut & olive)
E = Central Heating Return (22mm nut & olive)

## Clearances

In order to allow access to the interior of the boiler for maintenance purposes, the boiler must be installed in compliance with the minimum clearances indicated in Fig. 6

| | | |
|---|---|---|
| **A** | = | **450 mm** |
| **B** | = | **60 mm** |
| **C** | = | **300 mm** |
| **D** | = | **450 mm** |
| **E** | = | **350 mm** |

**Mounting the Appliance**
After removing the boiler from its packaging, remove the template from the box. Note: Pay particular attention to any test water that may spill from the appliance.

Place the template in the position the appliance is to be mounted and after ensuring it is hanging squarely, use it to drill the holes for the hanging bracket and flue pipe(s) NB: For further information relating to the flue installation please refer to *Flue Installation - page 13*. (If the appliance is to be fitted on a wall of combustible material, the wall must be protected by a sheet of fireproof material).
If the appliance is to be fitted into a timber framed building, guidance should be sought from the Institute of Gas Engineers document Ref: IGE/UP/7.

Drill the wall and plug using those supplied with the connections kit, position the hanging bracket and secure with the wall bolts supplied, assembl the connection kit and secure to the wall. Position the appliance on the hanging bracket and connect the valves to the boiler connections. (see also *Gas Connections*, *Water Connections - page 11*).

**Electrical Connection**
For safety purposes, have a competent person carefully check the electrical system in the property, as the manufacturer will not be held liable for damage caused by the failure to earth the appliance properly or by anomalies in the supply of power. Make sure that the residential electrical system is adequate for the maximum power absorbed by the unit, which is indicated on the rating plate. In addition, check that the section of cabling is appropriate for the power absorbed by the boiler.

The boiler operates with alternating current, as indicated in the Technical Information tables on pages 6 and 7, where the maximum absorbed power is also indicated. Make sure that the connections for the neutral and live wires correspond to the indications in the diagram. The appliance electrical connections are situated on the reverse of the control panel.

Important!
In the event that the power supply cord must be changed, replace it with one with the same specifications.
Note: The diagrams for the electrical system and external wiring configurations can be found on pages ?? and ??.

Should external controls be required, the design of the external electrical circuits should be undertaken by a competent person.

Warning, this appliance must be earthed.

External wiring to the appliance must be carried out by a competent person and be in accordance with the current I.E.E. Regulations and applicable local regulations.
The appliance is supplied with a fly-lead already connected, this must be connected to a 240v supply fused at 3A and must facilitate complete electrical isolation of the appliance, by the use of a fused double pole isolator having a contact separation of at least 3 mm in all poles or alternatively, by means of a 3 A fused three pin plug and unswitched shuttered socket outlet both complying with BS 1363.
The point of connection to the Electricity supply must be readily accessible and adjacent to the appliance unless the appliance is installed in a bathroom when this must be sited outside the bathroom.

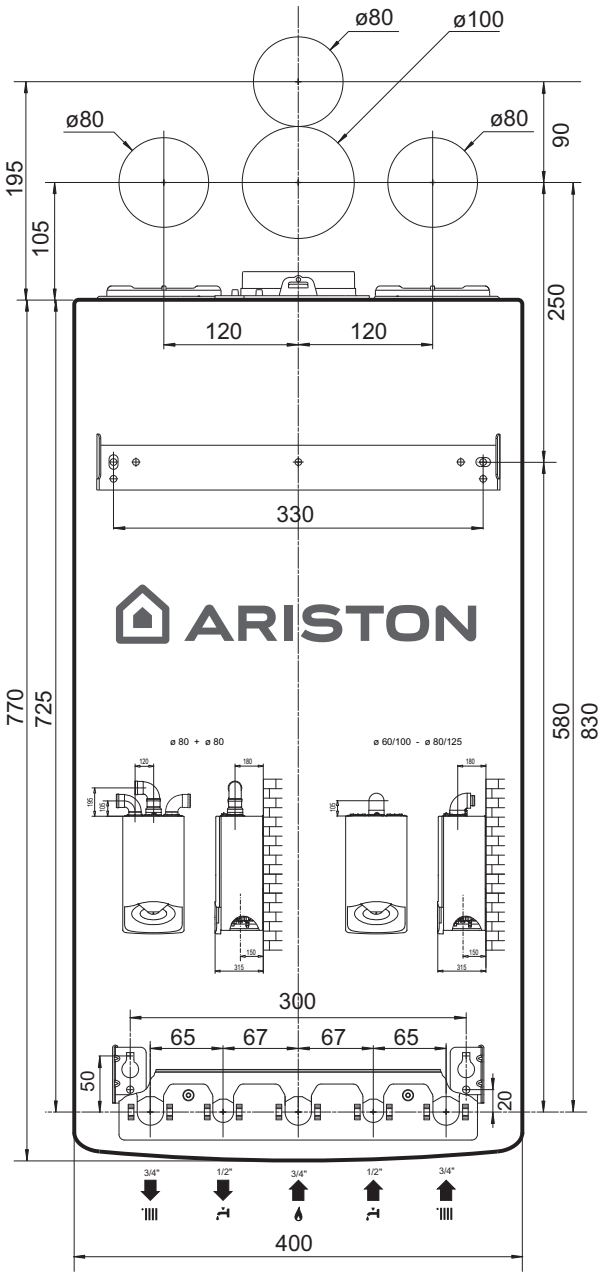


**Fig. 7**

CLAS 24/30 FF

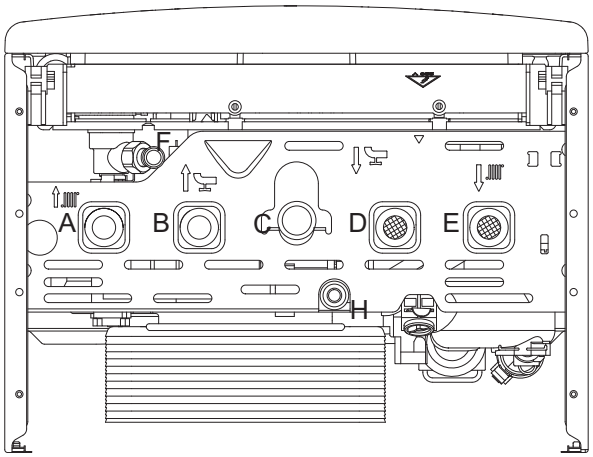


CLAS SYSTEM 21/28 FF

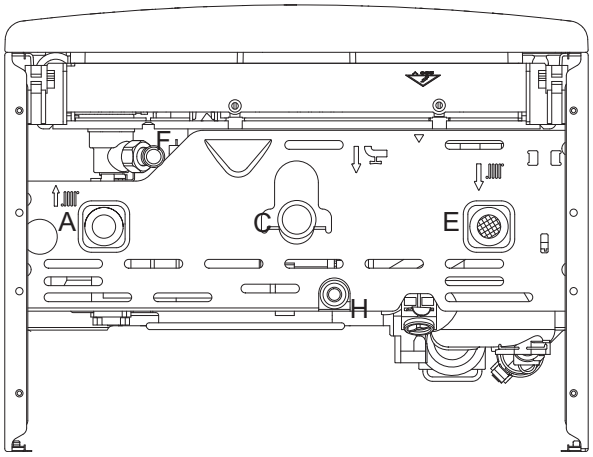


Fig. 8

**Gas Connection**

The local gas region contractor connects the gas meter to the service pipe.

If the gas supply for the boiler serves other appliances ensure that an adequate supply is available both to the boiler and the other appliances when they are in use at the same time.

Pipe work must be of an adequate size. Pipes of a smaller size than the boiler inlet connection must not be used.

**Water Connections**
**View of the Boiler Connections**

Legend:

A = Central Heating Flow
B = Domestic Hot Water Outlet
C = Gas Inlet
D = Domestic Cold Water Inlet
E = Central Heating Return
F = Safety Valve Outlet
H = Drain valve

**Central Heating**

Detailed recommendations are given in BS 6798:1987 and BS 5449-1:1990, the following notes are given for general guidance.

**Pipe Work:**

Copper tubing to BS EN 1057:1996 is recommended for water pipes. Jointing should be either with capillary soldered or compression fittings.

Where possible pipes should have a gradient to ensure air is carried naturally to air release points and water flows naturally to drain taps.

The appliance has a built-in automatic air release valve, however it should be ensured as far as possible that the appliance heat exchanger is not a natural collecting point for air.

Except where providing useful heat, pipes should be insulated to prevent heat loss and avoid freezing.

Particular attention should be paid to pipes passing through ventilated spaces in roofs and under floors.

**By-pass:**

The appliance includes an automatic by-pass valve, which protects the main heat exchanger in case of reduced or interrupted water circulation through the heating system, due to the closing of thermostatic valves or radiators.

**System Design:**

This boiler is suitable only for sealed systems.

**Drain Cocks:**

These must be located in accessible positions to permit the draining of the whole system and should be fitted at all low points. The taps must be at least 15mm nominal size and manufactured in accordance with BS 2870:1980.

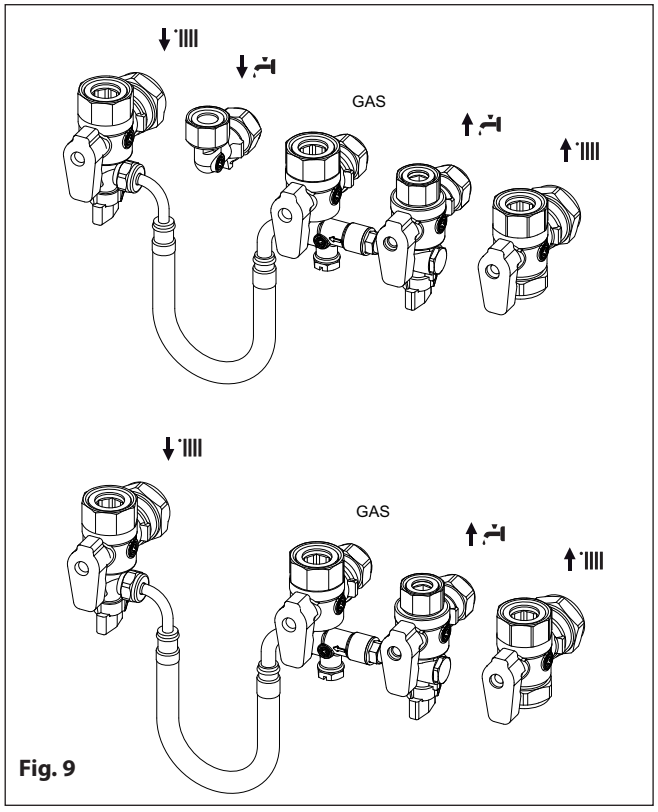


Fig. 9

**Safety Valve Discharge:**
The discharge should terminate facing downward on the exterior of the building in a position where discharging (possibly boiling water & steam) will not create danger or nuisance, but in an easily visible position, and not cause damage to electrical components and wiring.
The discharge must not be over an entrance or a window or any other type of public access.

**Air Release Points:**
These must be fitted at all high points where air naturally collects and must be sited to facilitate complete filling of the system.
The appliance has an integral sealed expansion vessel to accommodate the increase of water volume when the system is heated.
It can accept up to 8 litres (1.8 gal) of expansion water. If the heating circuit has an unusually high water content, calculate the total expansion and add an additional sealed expansion vessel with adequate capacity. This should be located on the return pipe work as close as possible to the pump inlet.

## Residual Head of the Boiler ΔT 20°C

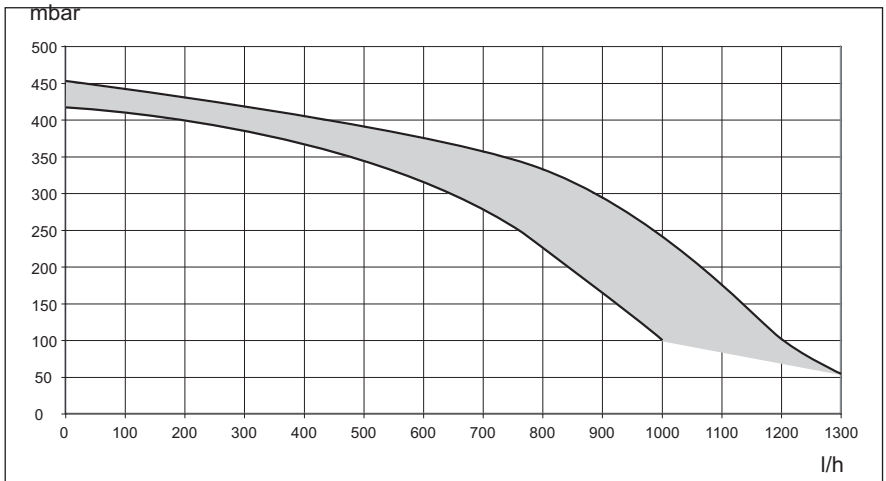


Fig. 10

**Mains Water Feed - Central Heating:**
A method for initially filling the heating system is supplied with the connection kit. The filling loop is connected between the cold water inlet and the central heating flow connections, and incorporates a non-return valve. To operate the filling loop, it is necessary to open both quarter turn handles, once the required pressure has been achieved, close both handles and disconnect the hose in accordance with water byelaws. Note: The installer should ensure that there are no leaks as frequent filling of the heating system can lead to premature scaling of the main exchanger and failure of hydraulic components.

**Domestic Water:**
The domestic water must be in accordance with the relevant recommendation of BS 5546:1990. Copper tubing to BS EN 1057:1996 is recommended for water carrying pipe work and must be used for pipe work carrying drinking water, a scale reducer should also be used to reduce the risk of scale forming in the domestic side of the heat exchanger.

**Flue Connections**

Flue System

The provision for satisfactory flue termination must be made in accordance with BS 5440-1.

The appliance must be installed so that the flue terminal is exposed to outside air.

The terminal must not discharge into another room or space such as an outhouse or lean-to.

It is important that the position of the terminal allows a free passage of air across it at all times.

The terminal should be located with due regard for the damage or discolouration that might occur on buildings in the vicinity and consideration must be given to adjacent boundaries.

In cold or humid weather water vapour may condense on leaving the flue terminal. The effect of such "pluming" must be considered.

If the terminal is less than 2 metres above a balcony, above ground or above a flat roof to which people have access, then a suitable terminal guard must be fitted. When ordering a terminal guard, quote the appliance model number.

The minimum acceptable spacing from the terminal to obstructions and ventilation openings are specified in Fig. 11.

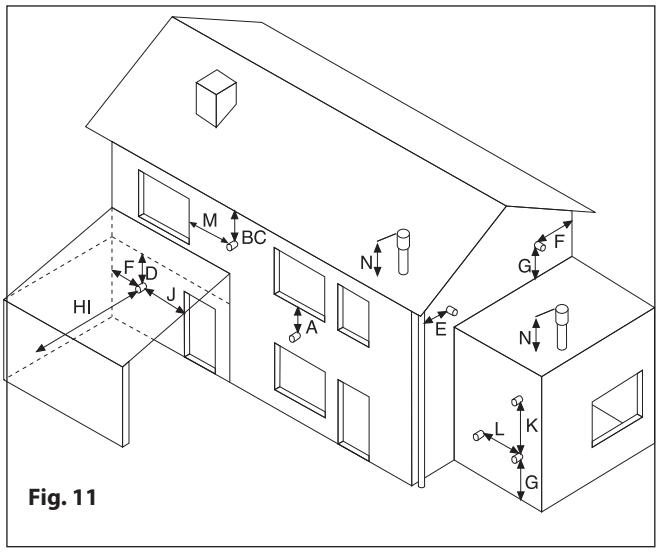


**Fig. 11**

| TERMINAL POSITION | mm |
|---|---|
| A - Directly above or below an openable window or other opening | 300 |
| B - Below gutters, solid pipes or drain pipes | 75 |
| C - Below eaves | 200 |
| D - Below balconies or car-port roof | 200 |
| E - From vertical drain pipes and soil pipes | 150 |
| F - From internal or external corners | 300 |
| G - Above ground or balcony level | 300 |
| H - From a surface facing a terminal | 600 |
| I - From a terminal facing a terminal | 1200 |
| J - From an opening in the car port (e.g. door, window) into dwelling | 1200 |
| K - Vertically from a terminal in the same wall | 1500 |
| L - Horizontally from a terminal in the same wall | 300 |
| M - Horizontally from an opening window | 300 |
| N - Fixed by vertical flue terminal | |

**NOTE: THE FLUE MUST NOT TERMINATE IN A PLACE LIKELY TO CAUSE NUISANCE.**

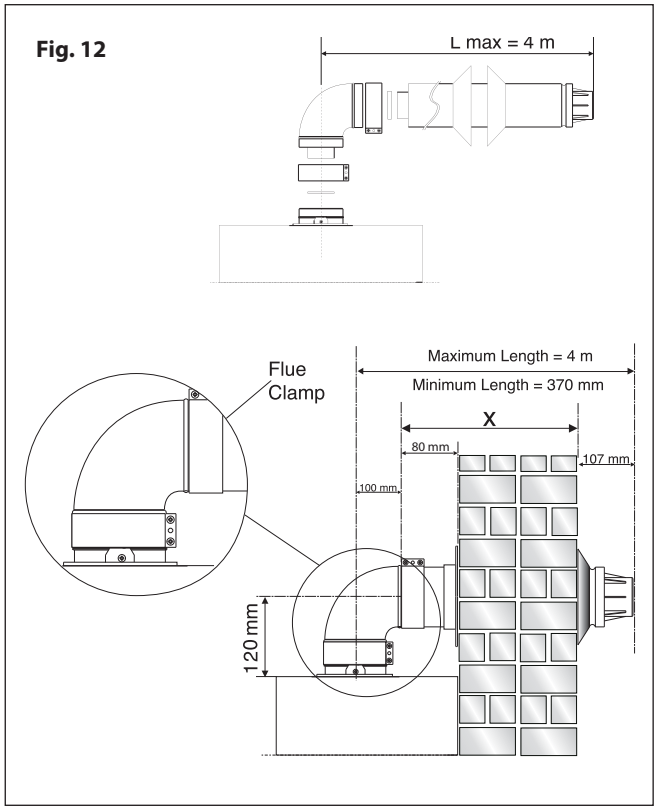


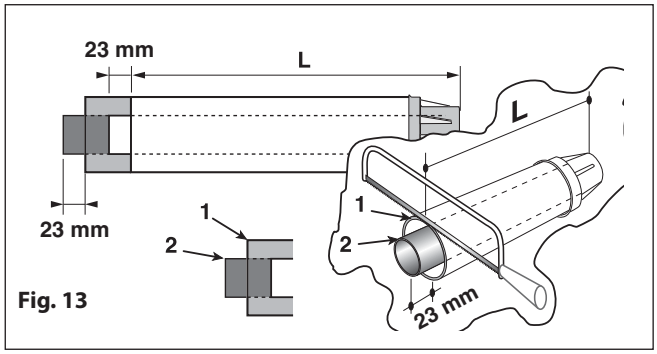


**Fitting the Coaxial Flue (Horizontal)**
(For Vertical Flue and Twin Pipe Instructions see pages 13 and 14)

Contents:
1x Silicone O-Ring (60mm)
1x Elbow (90º)
2x Wall Seals (Internal & External)
1x Flue Pipe including Terminal (1 metre - 60/100)
2x Flue Clamps
4x Screws
2x Foam Seals

Once the boiler has been positioned on the wall, insert the elbow into the socket (Fig 12) and rotate to the required position. Note: It is possible to rotate the elbow 360º on its vertical axis.

Using the flue clamps, seals and screws supplied (Figs. 12 and 14) secure the elbow to the boiler.

The 1 metre horizontal flue kit (3318000) supplied is suitable for an exact X dimension of 811mm, and the 750mm horizontal flue kit (3318001) is suitable for an exact X dimension of 699mm.

Measure the distance from the face of the external wall to the face of the flue elbow (X - Fig 12), add 23 mm to this measurement, you now have the total length of flue required (including the terminal), this figure must now be subtracted from 860mm, you now have the total amount to be cut from the plain end of the flue.
Cut the flue to the required length ensuring that the distance between the inner and the outer flue is maintained (Fig 2.8).
e.g. X = 508mm + 22mm = 530mm
860 - 530 = 330mm (Length to be cut from the plain end of the flue).

Once cut to the required length, ensure that the flue is free from burrs and reassemble the flue. If fitting the flue from inside of the building attach the grey outer wall seal to the flue terminal and push through the flue through the hole, once the wall seal has passed through the hole, pull the flue back until the seal is flush with the wall. Alternatively, the flue can be installed from outside of the building, the grey outer seal being fitted last.

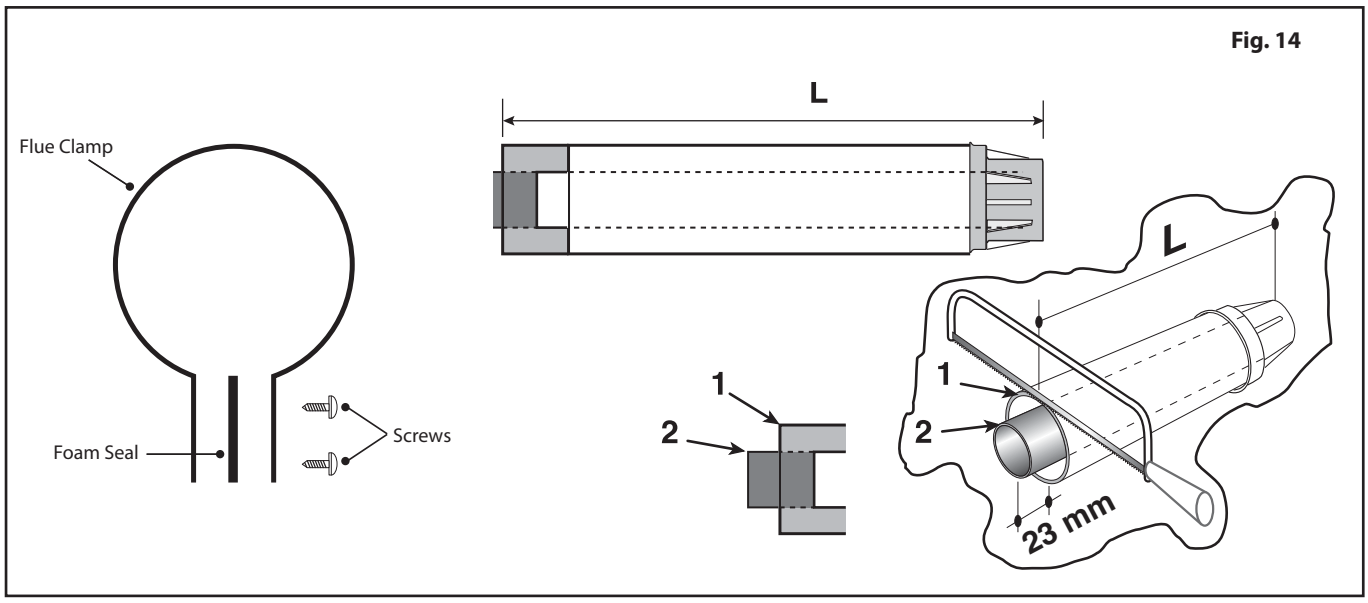

**WARNING**
**If the chosen flue length requires the use of the restrictor, it is already fitted inside the flue gas collar. In the event of an installation which does not require the use of the restrictor, the latter should be removed from the flue gas collar. See table A (Page 20 and Fig 15).**

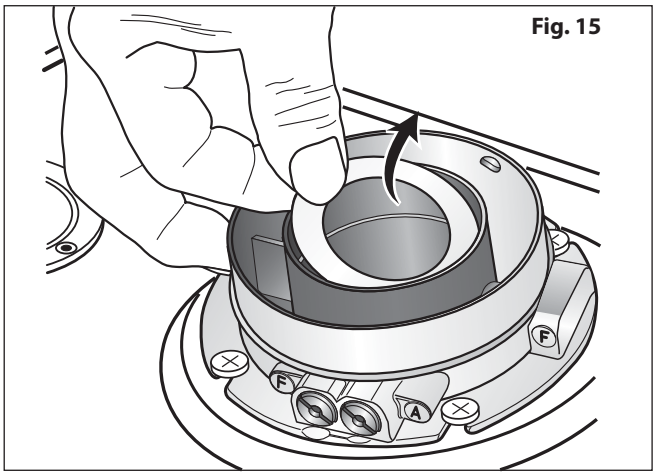

Fig. 15

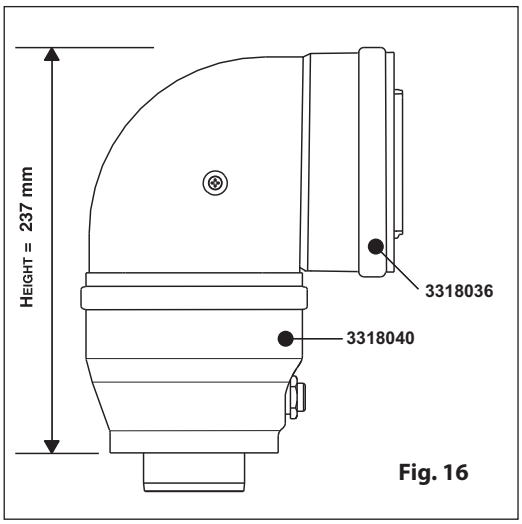

Fig. 16

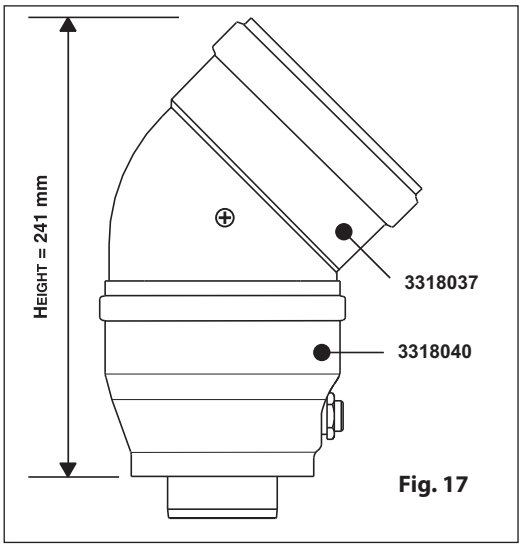

Fig. 17

## Fitting 80/125 Flue (Horizontal and Vertical)

(For Coaxial Vertical Flue Instructions see page 13)

Should the flue require extending, the flue connections are push fit, however, one flue bracket should be used to secure each metre of flue.

Note: See page 20 for maximum and minimum flue runs.

Once the boiler has been positioned on the wall, it is necessary to insert the Ø80/125 adaptor (Fig. 18) for both horizontal and vertical flue runs into the boiler flue socket (not supplied with flue kit - Part No 3318040).

Push the adaptor onto the boilers flue connection, grease the seals then add extensions or elbows as required, secure the adaptor, using the clamp and screws provided.

To fit extensions or elbows it is first necessary to ensure that the lip seal is fitted correctly into the inner flue, once verified, it is simply necessary to push them together, no clamps are necessary to secure the flue components.

Before proceeding to fit the flue, ensure that the maximum flue length has not been exceeded (See the tables on Page 20) and that all elbows and bends have been taken into consideration, for each additional 90° elbow 1 metre must be subtracted from the total flue length, and for each 45° 0.5 metres must be subtracted from the total flue length (the height of the vertical adaptor and a 45° bend can be seen in Fig. 17 and a 90° bend in Fig. 16).
Note: DO NOT cut the vertical flue kit.

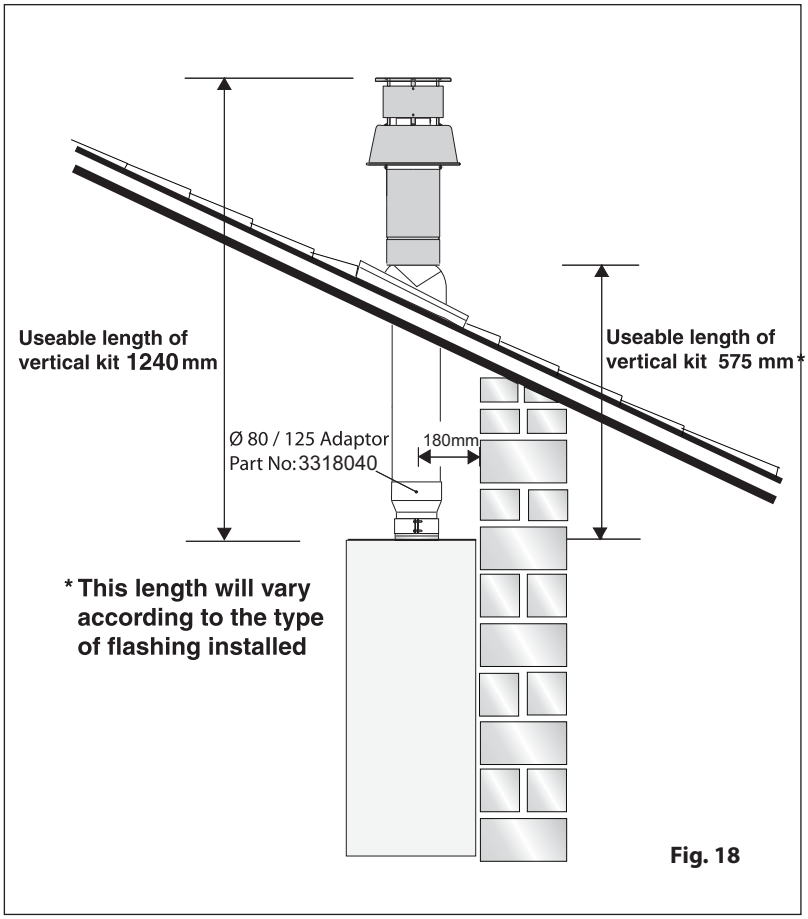

Fig. 18

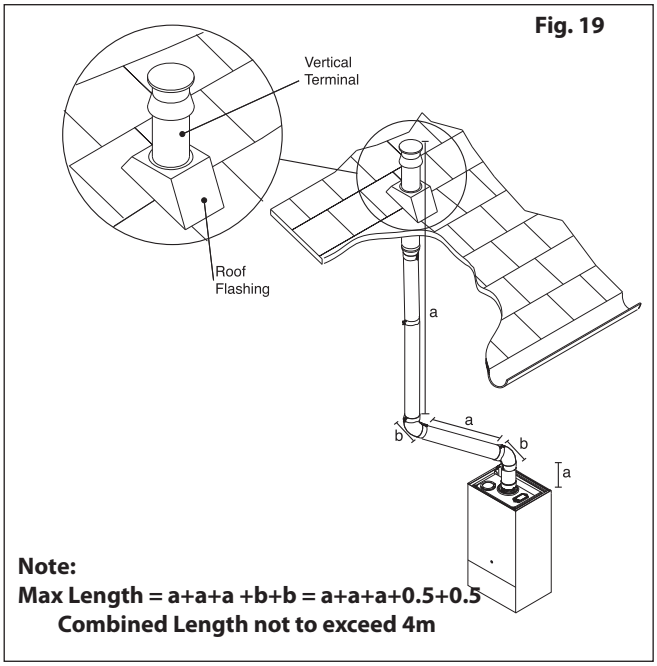


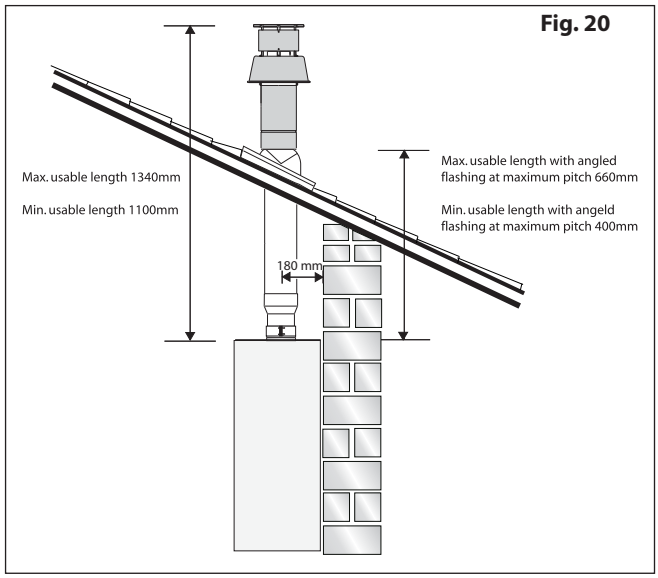


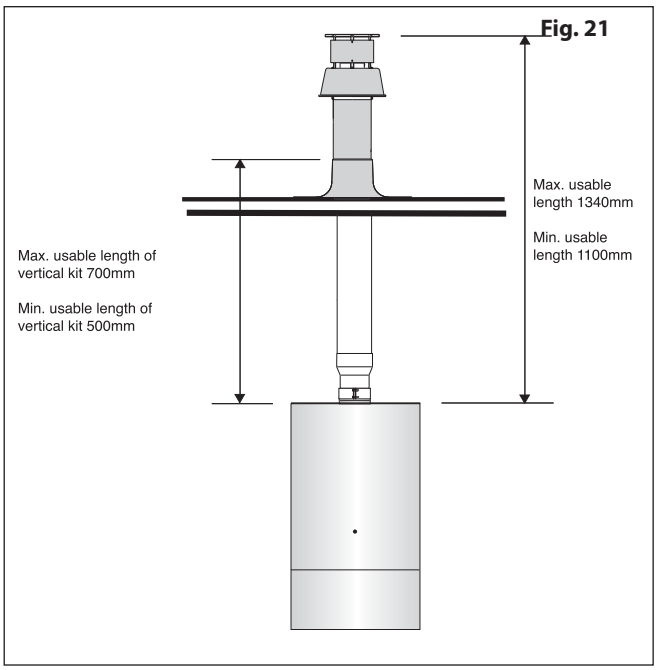


Fitting the Coaxial Flue (Vertical)
(For Twin Pipe Instructions see page 17)

Contents:
1x Silicone O-Ring (60mm)
1x Elbow (90o)
2x Wall Seals (Internal & External)
1x Aluminium Flue Pipe including Terminal (Telescopic - 60/100)
2x Flue Clamps
8x Screws
2x Seals

The vertical flue kit is supplied with a specially designed weather proof terminal fitted, it can be used either with a flat roof or a pitched roof. (see Figs 20 and 21).

The Vertical flue kits maximum and minimum useable lengths with both flat and pitched roof flashings are indicated in (Figs. 20 and 21).

Before proceeding to fit the flue, ensure that the maximum flue length has not been exceeded and that all elbows and bends have been taken into consideration, the maximum flue length is 4 metres, for each additional 90° elbow 1 metre must be subtracted from the total flue length, and for each 45° 0.5 metres must be subtracted from the total flue length (the offset and height of 2 x 45° can be seen in Fig. 22b).

Mark the position of the flue hole in the ceiling and/or roof (see Fig. 20 for distance from wall to the centre of the flue).

Cut a 125mm diameter hole through the ceiling and/or roof and fit the flashing plate to the roof.
Should it be necessary to cut the flue DO NOT cut the outer white air inlet tube, cut the aluminium exhaust flue 6mm longer than the outer white air tube when used at minimum length. DO NOT cut more that 250mm from the inner aluminium exhaust flue.

To connect the vertical flue kit directly to the boiler, place the adaptor (supplied with vertical flue kit) onto the exhaust manifold and secure with the clamp, the vertical flue kit must then be inserted through the roof flashing, this will ensure that the correct clearance above the roof is provided as the terminal is a fixed height.

Should extensions be required, they are available in 1 metre (Part No. 3318005), 500mm (Part No. 3318006), they must be connected directly to the boiler and secured with the clamp supplied before connecting the adaptor to allow the vertical flue kit to be fitted. In the event that extension pieces need to be shortened, they must only be cut at the male end and it must be ensured that the distance between the inner and outer flue are kept (Fig. 2.8, page 11).

**WARNING**
**If the chosen flue length requires the use of the restrictor, it is already fitted inside the flue gas collar. In the event of an installation which does not require the use of the restrictor, the latter should be removed from the flue gas collar. See table A (Page 20 and Fig 22b).**

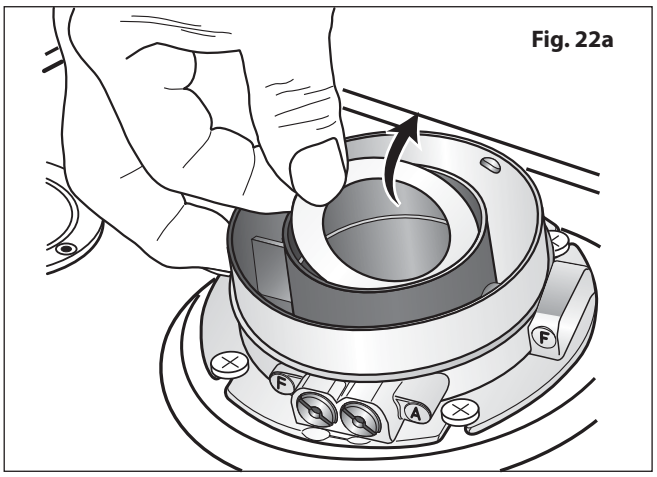

Fig. 22a

**Minimum offset distance when using 2x 45° bends**

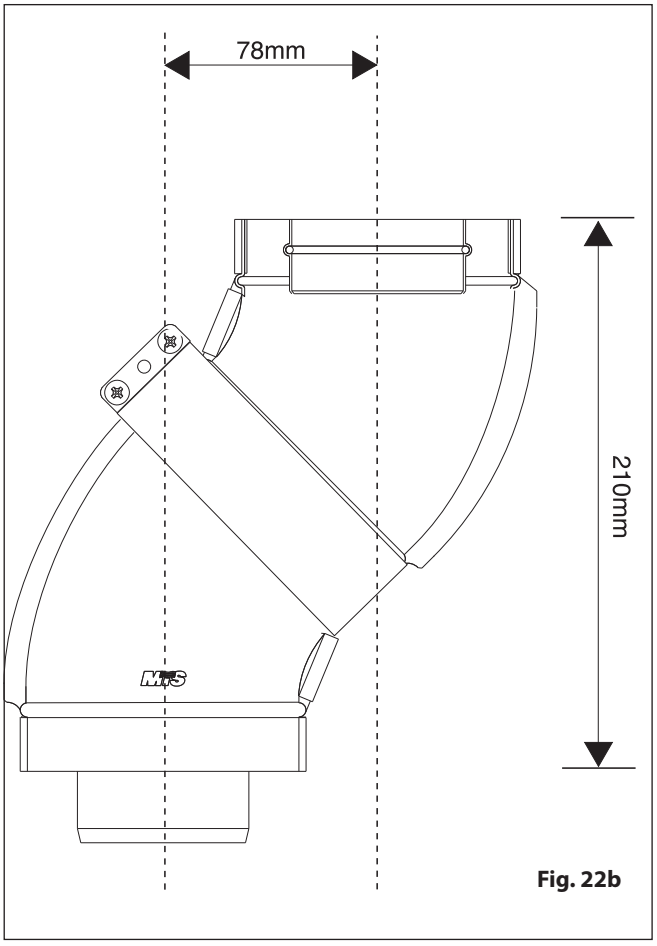

Fig. 22b

When utilising the vertical flue system, action must be taken to ensure that the flue is supported adequately to prevent the weight being transferred to the appliance flue connection.
When the flue passes through a ceiling or wooden floor, there must be an air gap of 25mm between any part of the flue system and any combustible material. The use of a ceiling plate will facilitate this. Also when the flue passes from one room to another a fire stop must be fitted to prevent the passage of smoke or fire, irrespective of the structural material through which the flue passes.

**Fitting the Flue (Twin Pipe)**
Where it is not possible to terminate the flue within the distance permitted for coaxial flues, the twin flue pipe can be used by fitting a special adaptor to the flue connector and using the aperture for the air intake located on top of the combustion chamber.

For twin flue installation it is most important to avoid any possible condense formation entering the appliance.

Should there be the possibility of condensation forming within the flue, there are two options;

1) Where condense will form but can be negated with insulated flue, install the insulated flue with a fall of 5mm in every metre away from the boiler.
2) The exhaust flue will have a fall of 3° back to the boiler and a suitable trap will be fitted on the exhaust as close to the boiler as possible, condense will then be suitably disposed of.

Where the flue runs through cold spots, i.e. loft areas, condense is likely to be formed, therefore a fall back to the boiler and a trap is required.
Always ensure that the flue is adequately supported, avoiding low points. (MTS supply suitable clamps as Part No. 705778).

To utilise the air intake it is necessary to:
Remove the blank intake by cutting it with a suitable knife (Fig. 23, page 20);
Insert the elbow/flue pipe into the air intake until it stops;
The twin flue pipes can be fitted with or without additional elbows and need no clamps, simply ensure that the red o-ring is inserted in the female end of the flue pipe and push the extension piece fully into the previous section of flue pipe or elbow, check that the o-ring is not dislodged when assembling the flue.

Twin pipe can also be converted back to Coaxial flue to enable vertical termination with a coaxial kit by using the pipe bridge (Twin - Coaxial Adaptor - Part No. 3318030). When running the twin flue pipe vertically, a condense trap must always be used on the exhaust pipe.
It is not possible to use the pipe bridge for horizontal termination.

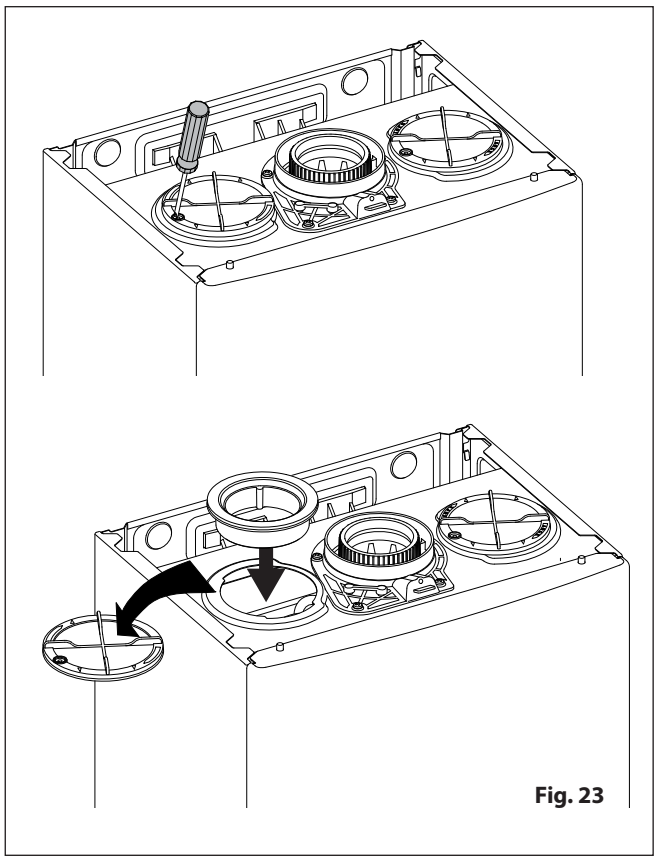

Fig. 23

IMPORTANT!!!
Where condense will form within the flue system, ensure there is a fall back to the boiler of 3oand a suitable trap is fitted as close to the boiler as possible. MTS supply a suitable collector Part No. 3318026.

Fig. 24

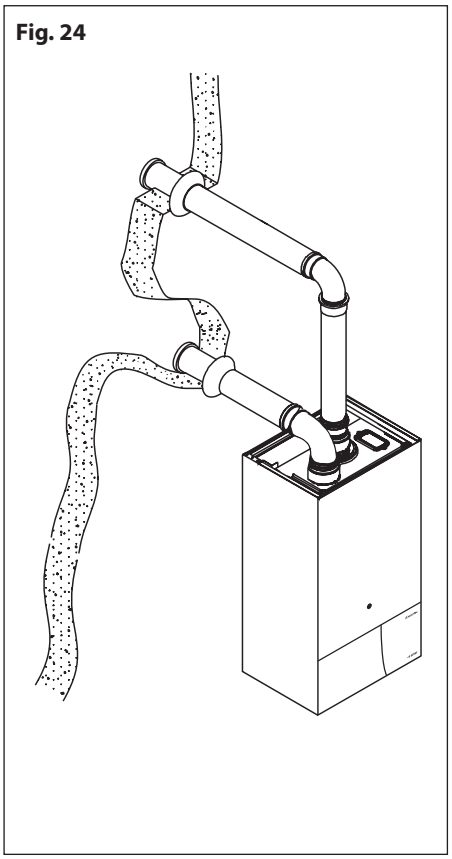

Note: Vertical twin flue installations must have a trap on the exhaust. MTS supply a suitable condense trap Part No. 3318026 and recommend that this be used in the event that the flue may form condense.

When siting the twin flue pipe, the air intake and exhaust terminals must terminate on the same wall, the centres of the terminals must be a minimum of 280 mm apart and the air intake must not be sited above the exhaust terminal (refer to Fig. 27). The air intake pipe can be run horizontally, however, the terminal and the final 1 metre of flue must be installed with a fall away from the boiler to avoid rain ingress.

It is also strongly recommended that the air intake pipe run be constructed of insulated pipe to prevent condense forming on the outside of the tube.

The maximum permissible flue length for twin flue is dependent on the type of installation.

For flue runs with the intake and exhaust pipes under the same atmospheric conditions (Type 4) the maximum length is 44 metres (31kW), for runs with the terminals under different atmospheric conditions (Type 5) the exhaust terminal must extend 0.5 metres above the ridge of the roof (this is not obligatory if the exhaust and air intake pipes are located on the same side of the building). For Type 5 also, the maximum permissible combined length is 40 metres.

The maximum length is reached by combining the total lengths of both the air intake and exhaust pipes. Therefore a maximum length of 40 metres for example, will allow a flue run of 20 metres for the air intake and 20 metres for the exhaust pipes, also for each 90° elbow 1.3 metres must be subtracted from the total length and for each 45° elbow 1 metre must be subtracted from the total flue length.
Some of the acceptable flue configurations are detailed on page 19 (Fig. 26).

For further information relating to flue runs not illustrated, please contact the Technical Department on 0870 241 8180.

Fig. 25

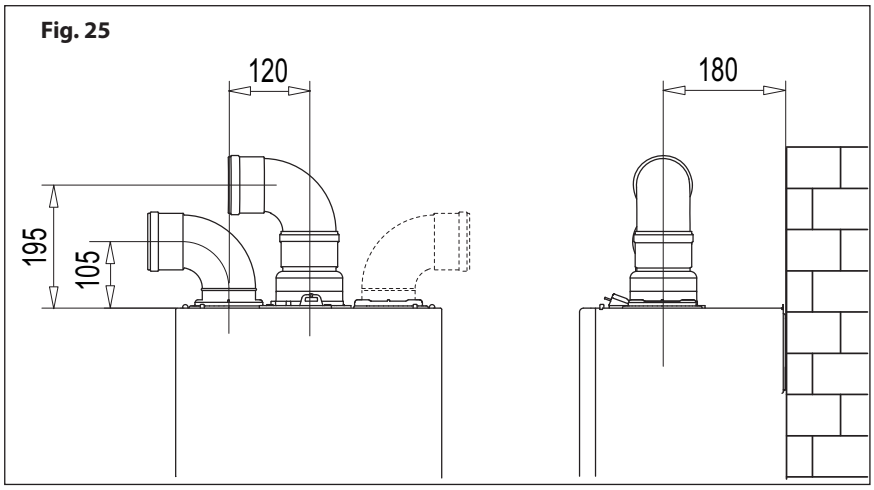

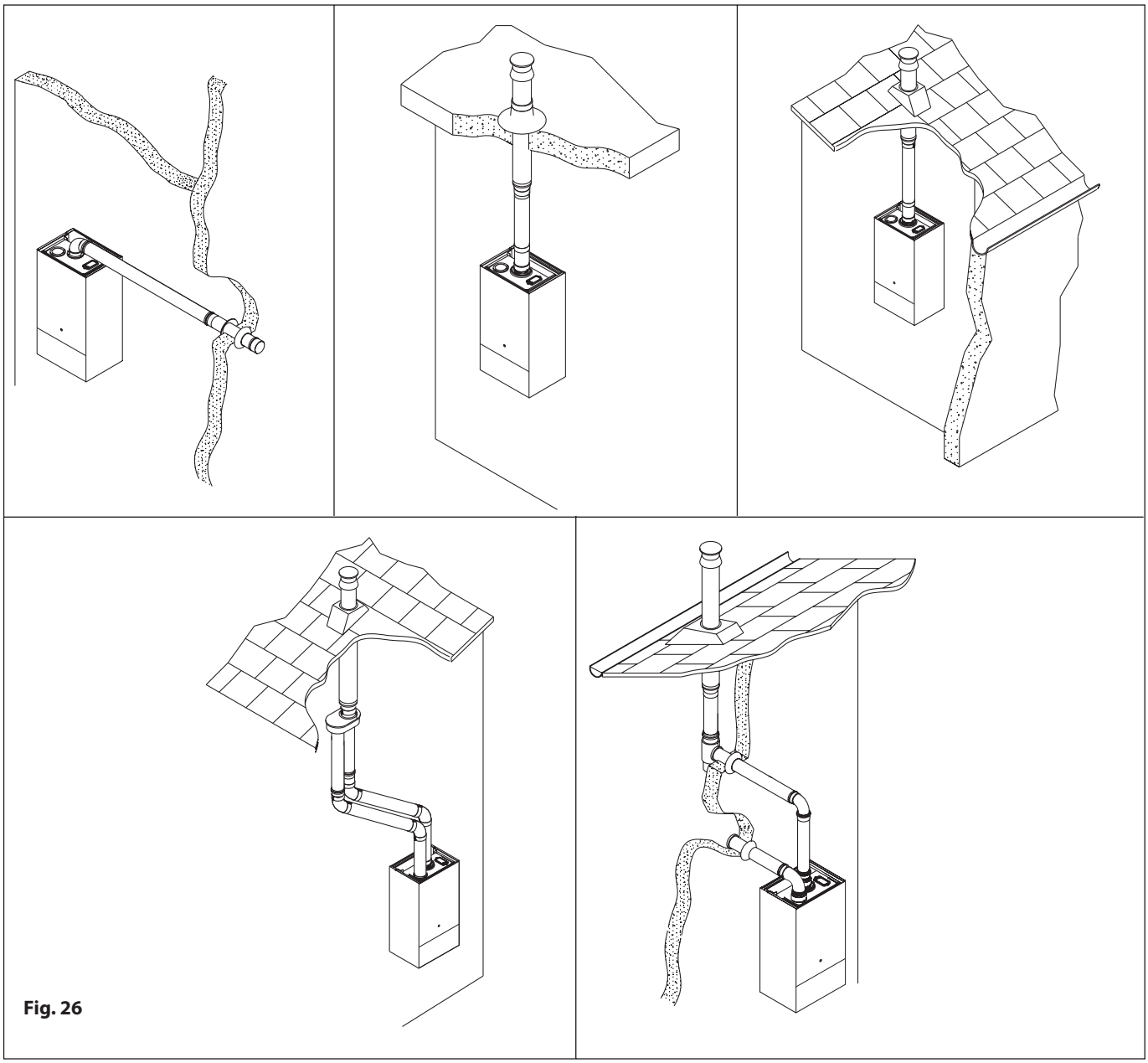

Fig. 26

**Note: Drawings are indicative of flueing options only.**

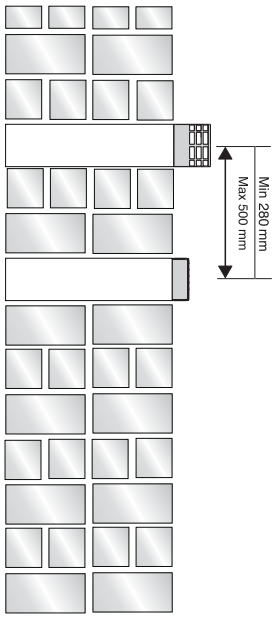


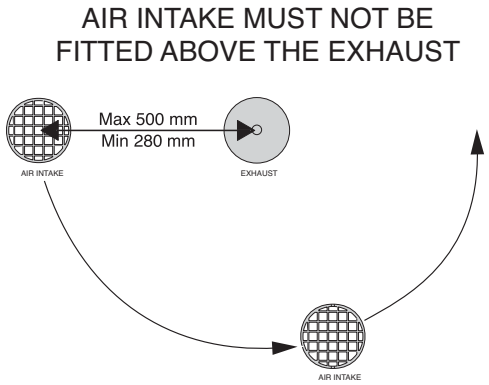


Fig. 27

**TABLE A**

| Exhaust Type | | MAXIMUM EXTENSION EXHAUST-AIR **(m)** | | | | | | | | Diameter of pipe (mm) |
|---|---|---|---|---|---|---|---|---|---|---|
| | | **CLAS 24 FF CLAS SYSTEM 21 FF** | | | | **CLAS 30 FF CLAS SYSTEM 28 FF** | | | | |
| | | Restrictor ø 44 | | Do not use Restrictor | | Restrictor ø 44 | | Do not use Restrictor | | |
| | | MIN | MAX | MIN | MAX | MIN | MAX | MIN | MAX | |
| **Coaxial Systems** | C12 C32 C42 | 0,5 | 0,75 | 0,75 | 4 | 0,5 | 0,75 | 0,75 | 4 | ø 60/100 |
| | B32 | 0,5 | 0,75 | 0,75 | 4 | 0,5 | 0,75 | 0,75 | 4 | |
| | C12 C32 C42 | 0,5 | 3 | 3 | 11 | 0,5 | 3 | 3 | 11 | ø 80/125 |
| | B32 | 0,5 | 3 | 3 | 11 | 0,5 | 3 | 3 | 11 | |
| **Twin Pipe Systems** | C12 C32 C42 | S1 = S2 | | | | S1 = S2 | | | | ø 80/80 |
| | | 0,5/0,5 | 15/15 | 15/15 | 26/26 | 0,5/0,5 | 11/11 | 11/11 | 25/25 | |
| | C52 C82 | 1 + S2 | | | | 1 + S2 | | | | ø 80/80 |
| | | 1/0,5 | 1/34 | 1/34 | 1/53 | 1/0,5 | 1/27 | 1/27 | 1/51 | |
| | B22 | 0,5 | 35 | 35 | 54 | 0,5 | 28 | 28 | 52 | ø 80 |

**WARNING**
**Before performing any work on the boiler, first disconnect it from the electrical power supply using the external bipolar switch.**

**Electrical connections**
For increased safety, ask a qualified technician to perform a thorough check of the electrical system.
The manufacturer is not responsible for any damage caused by the lack of a suitable earthing system or by the malfunctioning of the electricity mains supply.
Make sure that the system is able to withstand the maximum power absorbed by the boiler (this is indicated on the appliance data plate). Check that the section of the wires is suitable and is not less 1.5 $mm^2$
The appliance must be connected to an effiecient earthing system if it is to operate correctly.
The power supply cable must be connected to a 230V-50Hz network, where the L-N poles and the earth connection are all respected.
Important!
In the event that the power supply cable must be changed, replace it with one with the same specifications.

**Power supply cable**

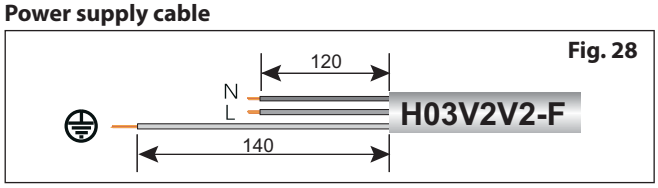

Fig. 28

**Important!**
**Connection to the electricity mains supply must be performed using a fixed connection (not with a mobile plug) and a bipolar switch with a minimum contact opening of 3 mm must be fitted.**

The use of multiplugs, extension leads or adaptors is strictly prohibited.
It is strictly forbidden to use the piping from the hydraulic, heating and gas systems for the appliance earthing connection.
The boiler is not protected against the effects caused by lightning. If the mains fuses need to be replaced, use 2A rapid fuses.

**WARNING**
**For the connection and positioning of the wires belonging to optional peripheral units, please refer to the advice relating to the installation of these units.**

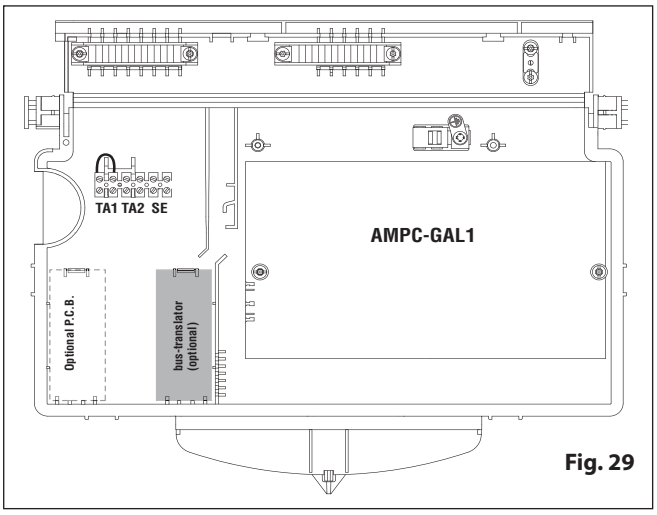

Fig. 29

## Peripheral unit connection
To access peripheral unit connections carry out the following steps:
- Disconnect the boiler from the power supply
- Remove the casing by unhooking it from the instrument panel
- Rotate the control panel while pulling it forwards
- Unscrew the two screws on the back cover of the instrument panel
- Unhook the right side clip and the right front clip; then lift the flap

The terminal board (see figure) may be accessed in order to connect:
**Outdoor sensor (not suitable for use on CLAS HE SYSTEM)**
**Room thermostat 1**
**Room thermostat 2**
Optional P.C.B.s can also be entered for further accessories:

| | |
|---|---|
| **BUS P.C.B.** | **For the connection of the Clima Manager remote control Modulating room sensor** |

**Caution!**
**For the connection and positioning of the wires belonging to optional peripheral units, please refer to the advice relating to the installation of these units.**

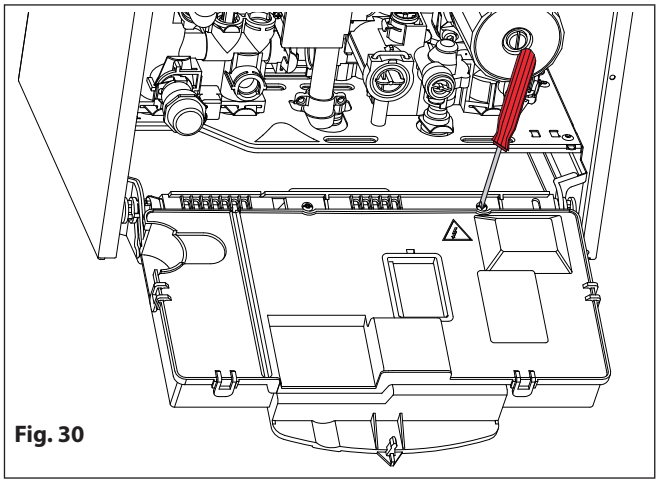
Fig. 30

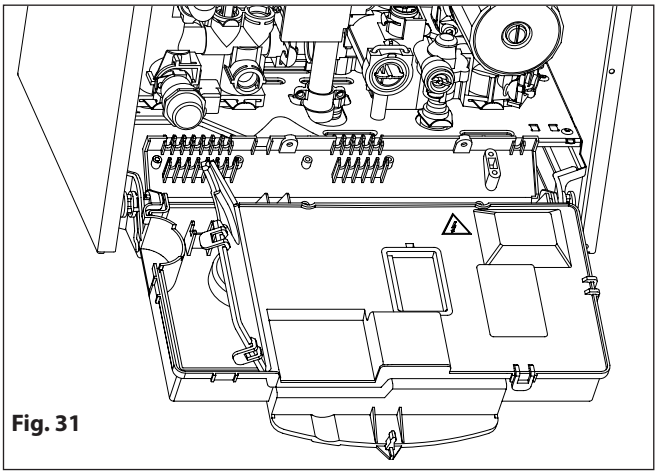
Fig. 31

**Room thermostat connection**
- Introduce the thermostat wire
- Loosen the cable clamp using a screwdriver and insert the wires leading from the room thermostat one at a time.
- Connect the wires to the terminals as indicated in the figure, removing the jumper
- Make sure that they are well connected and that they are not subject to traction when the control panel lid is opened or closed
- Close the flap again, then replace the control panel cover and the front casing.

Room Thermostat

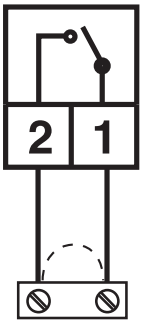


Connector TA on PCB
(low voltage switching)

**Note:** **When connecting the boiler to external controls, do not run 240V cables and cables for switching circuits (which are low voltage) together, use seperate cables to prevent induced voltage on the low voltage circuits.**

The boiler can be connected to a central heating system that uses two zone valves to allow connection to an indirect storage cylinder.
There are two wiring diagrams shown, one for the connection to an Unvented Cylinder and one for connection to an open vented cylinder.
In both cases the boiler connection is shown as TA1.

When connecting the boiler to an external cylinder do not run 240V cables and the cables for the room terminal together, use separate cables to prevent induced voltage on the low voltage switching circuit.

**Note:** **The use of a 'Y' Plan system is not possible with the CLAS HE SYSTEM boiler due to the low voltage switching of the appliance unless suitable relay controls are used.**

**Important!!**
**Ensure that a balancing valve is fitted on the cylinder return and balanced correctly at commissioning stage.**

- Introduce the outdoor sensor wires
- Loosen the cable clamp using a screwdriver and insert the wires leading from the outdoor sensor one at a time.
- Connect the wires to the terminals as indicated in the figure below;
- Make sure that they are well connected and that they are not subject to stress when the control panel lid is opened or closed;
- Close the flap again, then replace the control panel cover and the front casing.
- Refer to page 39 for setting the parameters when using the outdoor sensor.

Outdoor Sensor

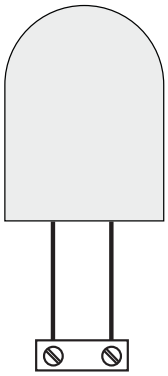

Connector SE on PCB

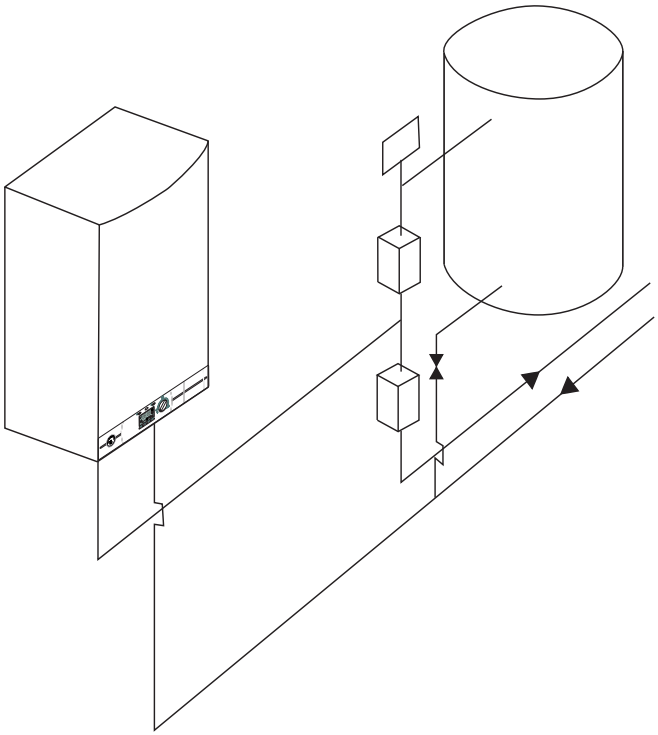

**Outdoor sensor connection**

## Wiring Diagram For Connection To An Open Vented Cylinder

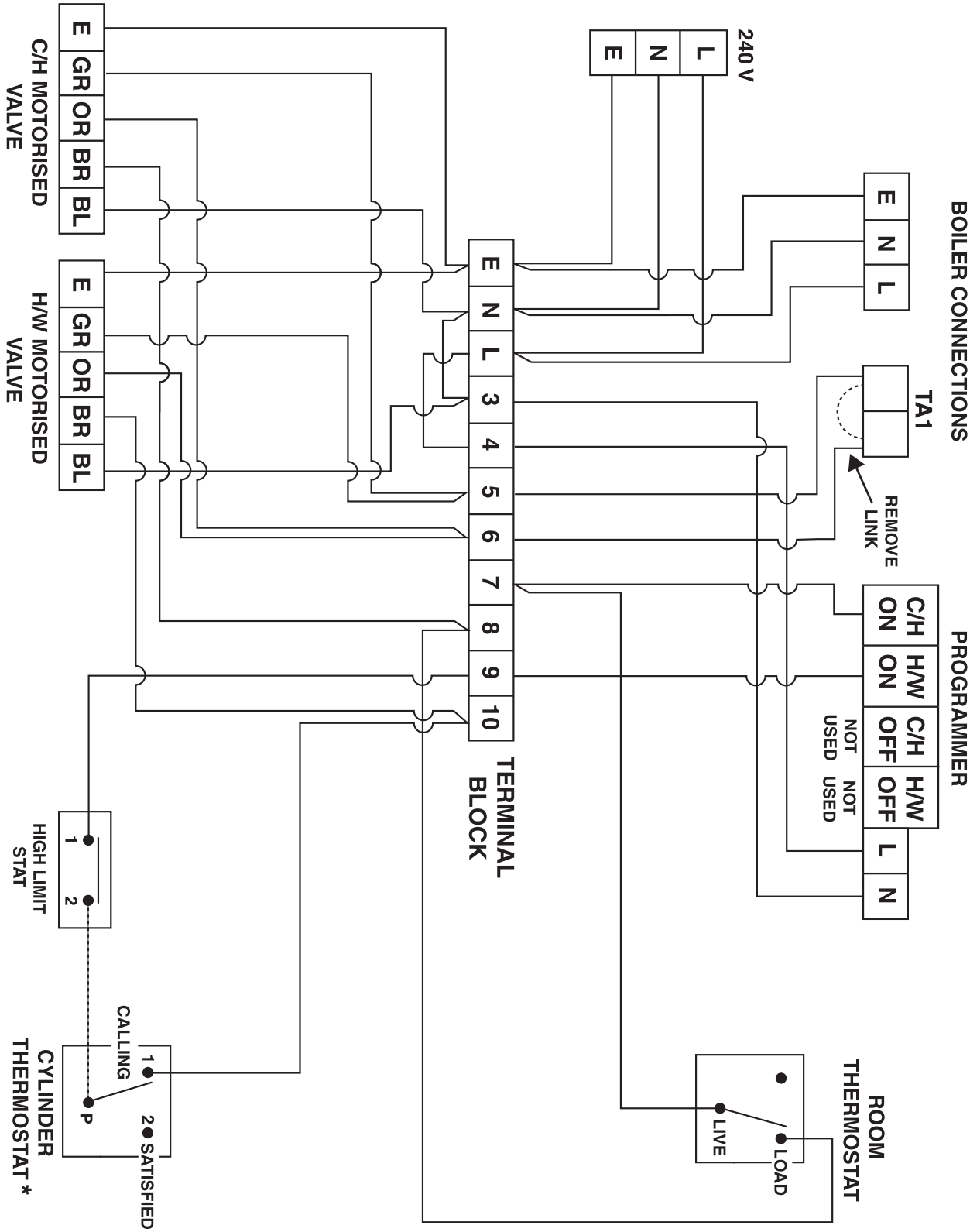


* Terminals shown are for the MTS Unvented Hot Water Cylinder Thermostats

## Wiring Diagram For Connection To An MTS Unvented Cylinder

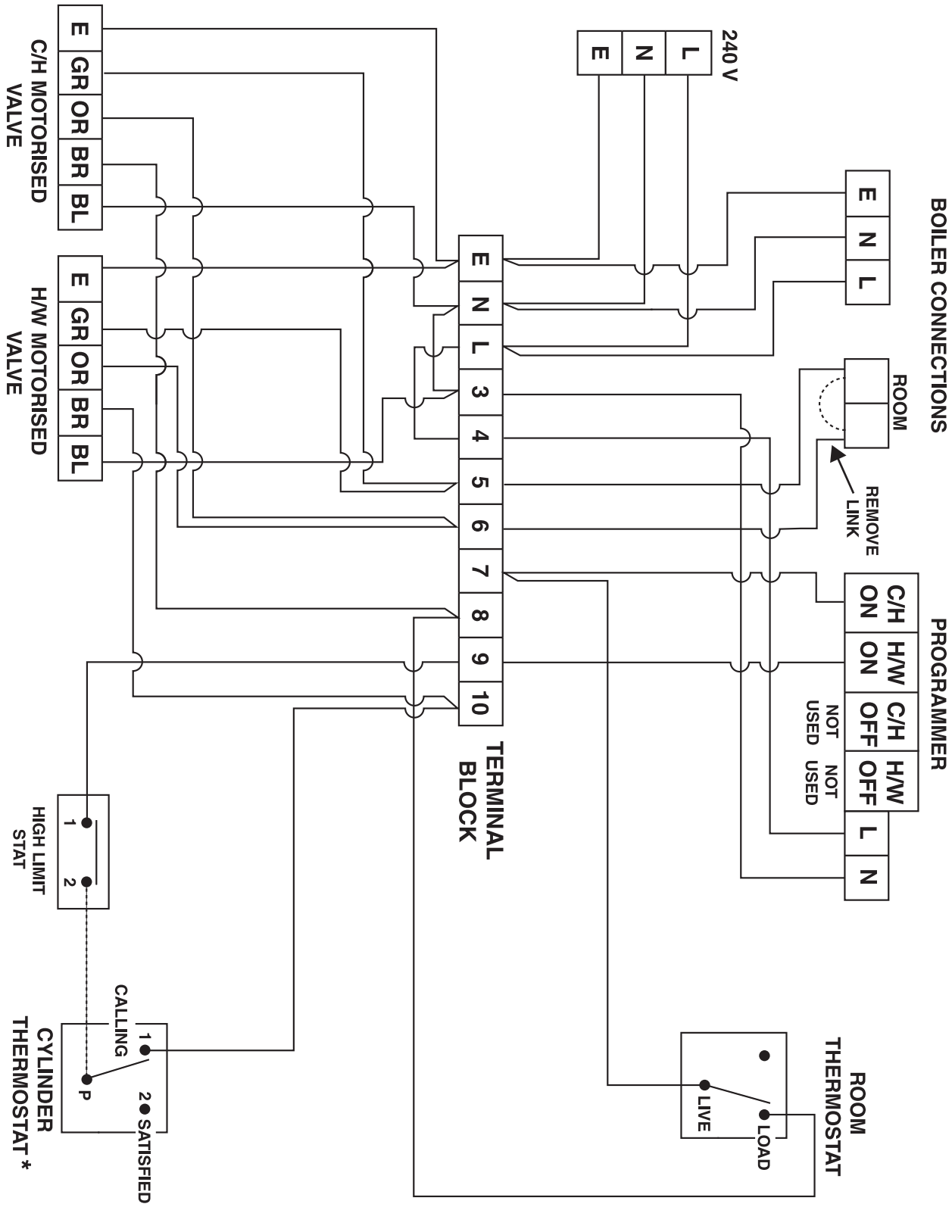


* Terminals shown are for the MTS Unvented Hot Water Cylinder Thermostats

**Electrical diagram**

For increased safety, ask a qualified technician to perform a thorough check of the electrical system.

The manufacturer is not responsible for any damage caused by the lack of a suitable earthing system or by the malfunctioning of the electricity mains supply.

**Fig. 32**

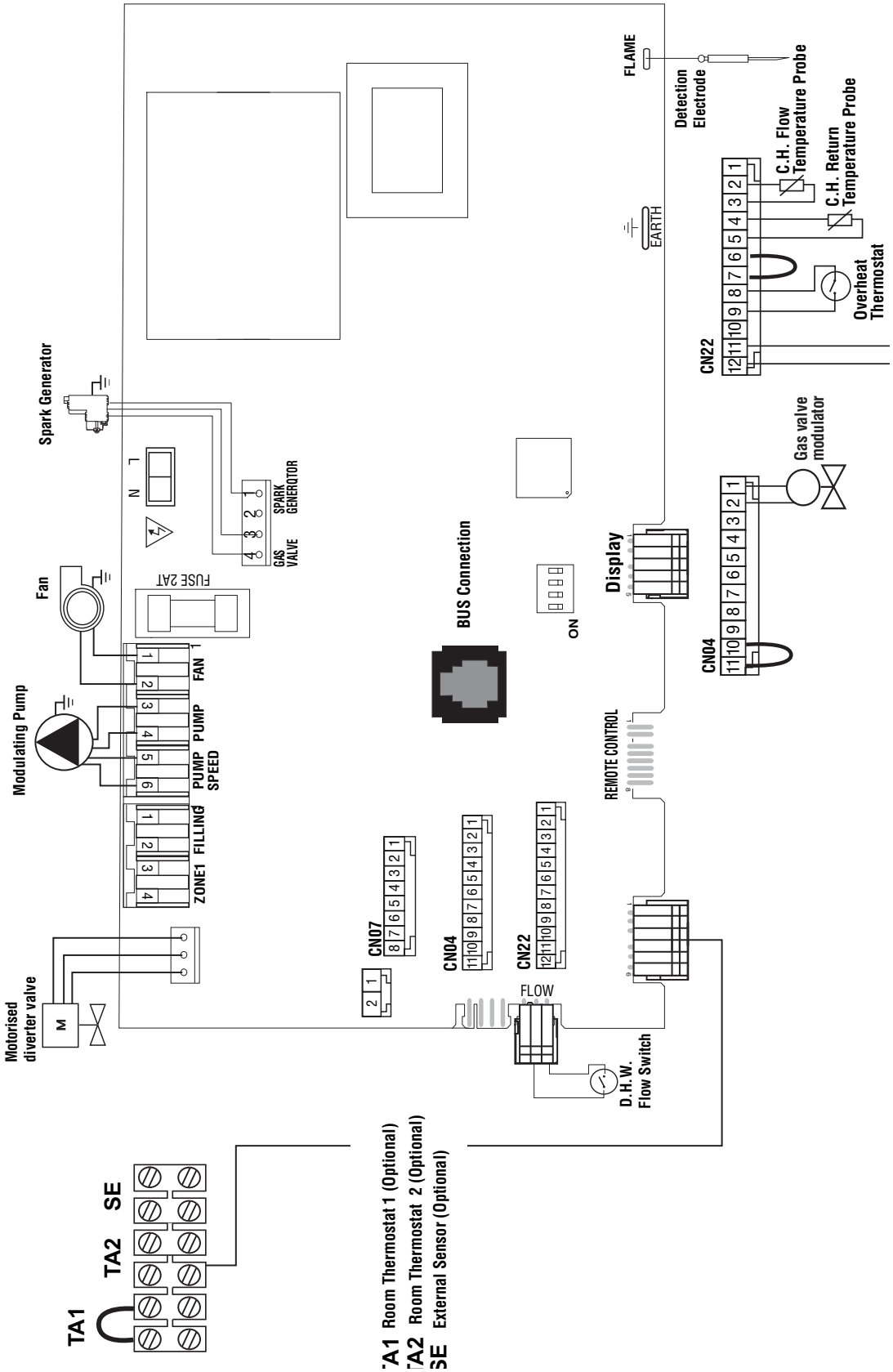

Fig. 33

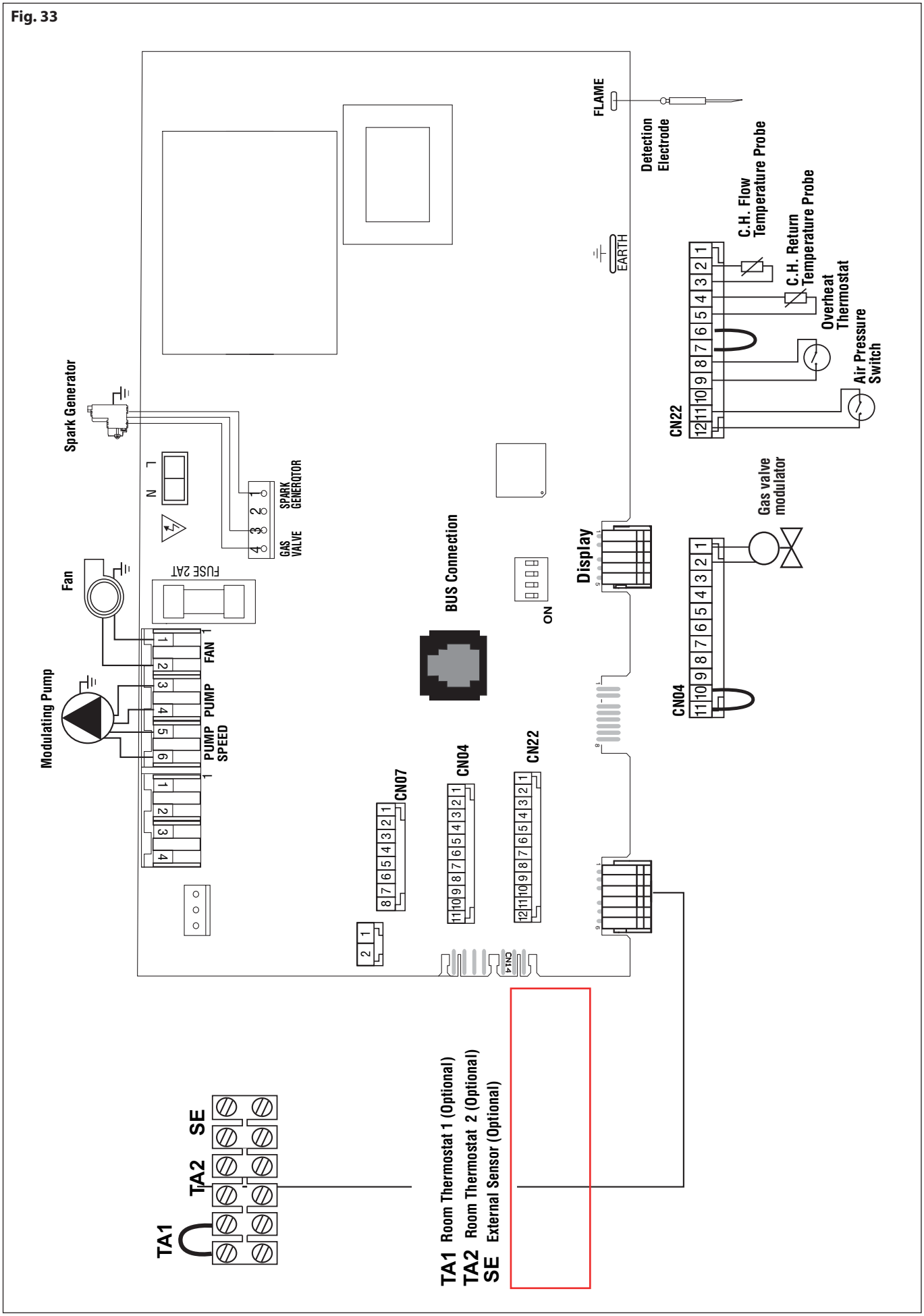
Spark Generator
Fan
Modulating Pump
L
N
FUSE 2AT
FAN
PUMP
PUMP SPEED
SPARK GENERATOR
GAS VALVE
BUS Connection
ON
Display
FLAME
Detection Electrode
EARTH
C.H. Flow Temperature Probe
C.H. Return Temperature Probe
Overheat Thermostat
Air Pressure Switch
CN22
Gas valve modulator
CN04
CN07
CN4
TA1
TA2
SE
TA1 Room Thermostat 1 (Optional)
TA2 Room Thermostat 2 (Optional)
SE External Sensor (Optional)

## Water Circuit Diagram

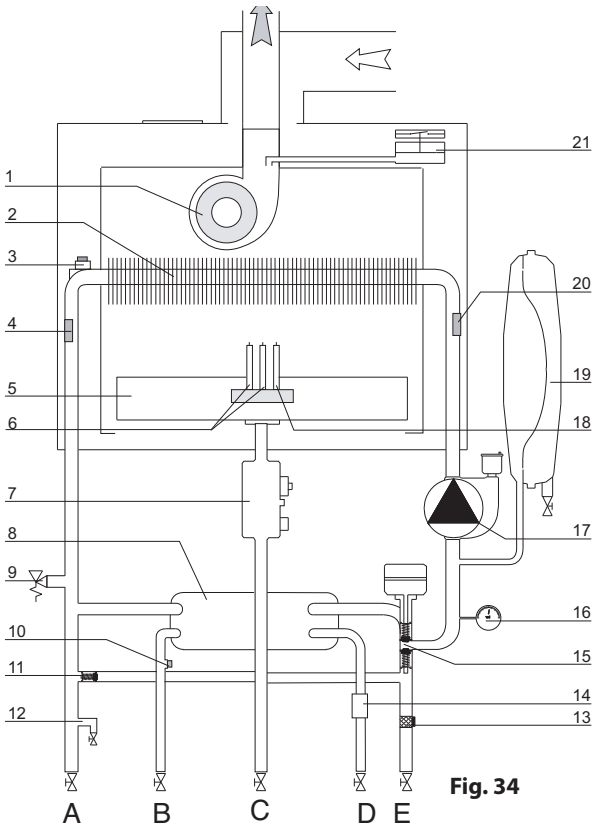


Fig. 34

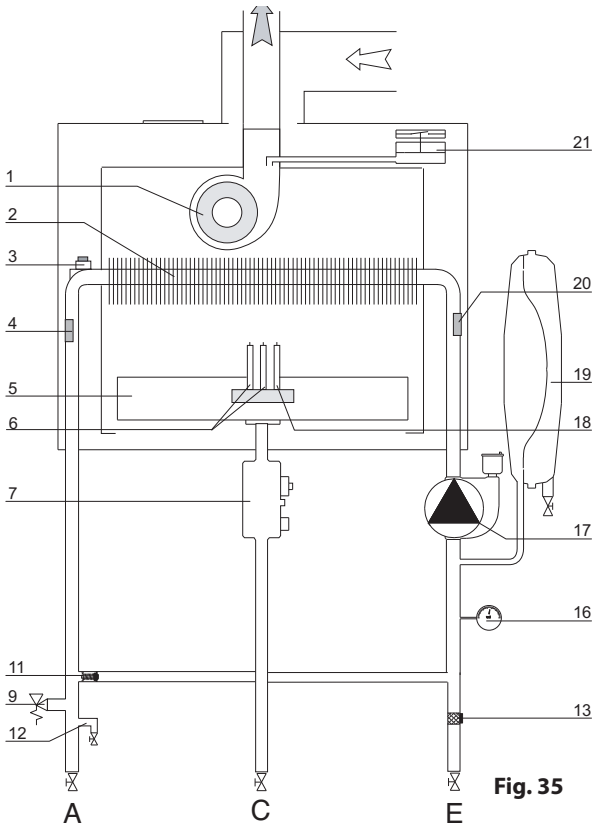


Fig. 35

Legend:

1. Fan
2. Main Heat Exchanger
3. Overheat Thermostat
4. Central Heating Flow Temperature Probe
5. Burner
6. Ignition Electrodes
7. Gas Valve
8. Secondary Exchanger
9. Safety valve
10. Domestic Hot Water Temperature Probe
11. Automatic By-pass
12. Drain valve
13. Central Heating Filter
14. D.H.W. Flow Switch
15. Diverter valve
16. Pressure Gauge
17. Modulating Circulation Pump with air release valve
18. Detection electrode
19. Expansion vessel
20. Central Heating Return Temperature Probe
21. Air Pressure Switch

A Central Heating Flow
B Domestic Hot Water Outlet
C Gas Inlet
D Cold Water Inlet
E Central Heating Return

## Initial Preparation

MTS (GB) Limited support the benchmark initiative. Within the information pack you will find a copy of the benchmark logbook. It is important that this is completed in the presence of your customer, they are shown how to use it, and it is signed by them. Please instruct your customer that they must have their benchmark log book with them whenever they contact a service engineer or us.

Preliminary electrical system checks to ensure electrical safety must be carried out by a competent person i.e. polarity, earth continuity, resistance to earth and short circuit.

Filling the Heating System:
Lower the control panel and remove the case panels.
Open the central heating flow and return cocks supplied with the connection kit (there are two isolation points on the return connection).
Unscrew the cap on the automatic air release valve one full turn and leave open permanently.
Close all air release valves on the central heating system.
Gradually open valve(s) at the filling point (filling-loop) connection to the central heating system until water is heard to flow, do not open fully.
Open each air release tap starting with the lowest point and close them only when clear water, free of air, is visible.
Purge the air from the pump by unscrewing the pump plug anticlockwise, also manually rotate the pump shaft in the direction indicated by the pump label to ensure the pump is free.
Refit the pump plug.
Continue filling the system until at least 1.5 bar registers on the pressure gauge.
Inspect the system for water soundness and remedy any leaks discovered.

Filling of the D.H.W. System (COMBI only):
Close all hot water draw-off taps.
Open the cold water inlet cock supplied with the connection kit.
Open slowly each draw-off tap and close them only when clear water, free of bubbles, is visible.

Gas Supply:
Inspect the entire installation including the gas meter, test for tightness and purge the supply as described in BS 6891:1988.
Open the gas cock (supplied with the connection kit) to the appliance and check the gas connections on the appliance for leaks.

Flushing Procedure
When the installation and filling are completed, flush the system while cold, refill, turn on the Central Heating system and run it until the temperature has reached the boiler operating temperature. The system must then be immediately flushed through.
The flushing procedure must be in line with BS 7593:1992 code of practice for treatment of water in domestic hot water central heating systems.
During this operation, we highly recommend the use of a central heating flushing detergent (Fernox Superfloc or equivalent), whose function is to dissolve any foreign matter that may be in the system.

Substances different from these could create serious problems to the pump or other components.
The use of an inhibitor in the system such as Fernox MB-1 or equivalent is strongly recommended to prevent corrosion (sludge) damaging the boiler and system.
Failure to carry out this procedure may invalidate the appliance warranty.

## Initial Start-up

The checks to be run before initial start-up are as follows:

1. Make sure that:
   - the cap on the automatic air valve has been loosened when the system is full;
   - If the water pressure in the system is below 1.5 bar, bring it up to the appropriate level;
   - Make sure that the electrical connection has been made properly and that the earth wire is connected to an efficient earthing system;
   - Switch on the boiler (by pressing the ON/OFF button) and select the standby mode, where no hot water or heating requests are made.
   - Start the deaeration cycle by pressing Esc for 5 seconds The boiler will start a deaeration cycle lasting about 7 minutes. If you need to stop it press Esc.
   - Loosen the cap on the head of the pump to eliminate any air pockets;
   - Repeat the procedure for bleeding the radiators of air;
   - Open the hot water taps for a brief period;
   - Check the system pressure and, if it has dropped, open the filling loop again to bring the pressure back up to 1.5 bar.
2. Make sure that all radiator valves are open;
3. Check the minimum and maximum burner pressure values; adjust if necessary using the values indicated in the table on Page 29.

### Description of Function

**De-aeration cycle**
During the filling stage or if there is excess air in the system, the deaeration cycle can be activated by holding the Esc button for 5 seconds. The boiler will start a cycle which lasts approximately 7 minutes. When this is complete the menu screen will be restored. The cycle may either be repeated, if necessary, or stopped by pressing Esc. Press the Esc button until the normal display screen is restored.

**Checking the gas settings**
Remove the front casing and proceed as described below.

**Supply working pressure check**
1. Loosen screw "1" (Fig. a) and attach the pressure gauge connection pipe onto the test nipple.
2. Switch the boiler on at maximum power, enabling the "flue sweep" function (press the Reset button for 5 seconds; the display will show "t --"). The working pressure should correspond to the value established in relation to the type of gas for which the boiler is designed.
3. When the check is over, tighten screw "1" and make sure it is securely in place.
4. The "flue sweep function" is automatically deactivated after 10 minutes or when the Reset button is pressed.

**Checking the D.H.W. maximum power**
1. To check the maximum power level, loosen screw "2" (Fig. b) and connect the pressure gauge connection pipe onto the test nipple.
2. Disconnect the air chamber compensation tube.
3. Run the hot water at maximum power, enabling the "flue sweep" function (press the Reset button for 5 seconds); the display shows "t -- "); press the programming key + to activate operation at the maximum hot water power level. The display will show "t --".
   The supply pressure should correspond to the value shown in the "Gas Settings" table, in relation to the type of gas for which the boiler is designed. If it does not correspond, remove the protective cover on the gas valve and tighten or loosen the adjustment screw "3" (fig. c) to adjust.
4. When the check is over, tighten screw "2" and make sure it is securely in place.
5. Replace the cover protecting the modulator.
6. Reconnect the compensation tube.
7. The "flue sweep function" is automatically deactivated after 10 minutes or when the Reset button is pressed.

**Checking the minimum power**
1. To check the minimum power level, loosen screw "2" (Fig. b) and insert the pressure gauge connection pipe as above.
2. Disconnect the air chamber compensation tube.
3. Switch the boiler on at maximum power, enabling the "flue sweep" function (press the Reset button for 10 seconds; the display shows "t -- "); press the programming key - to activate operation at the minimum hot water power level. The display will show "t __ ".
   Disconnect a wire from the modulator (fig. d); the supply pressure should correspond to the value shown in the "Gas Settings" table, in relation to the type of gas for which the boiler is designed. If it does not correspond, tighten or loosen the adjustment screw "4" (fig. d) to adjust.
4. When the check is over, tighten screw "2" and make sure it is securely in place.
5. Reconnect the modulator wire.
6. Reconnect the compensation tube.
7. The "flue sweep function" is automatically deactivated after 10 minutes or when the Reset button is pressed.

   Check all test nipples for tightness when all checks are complete.

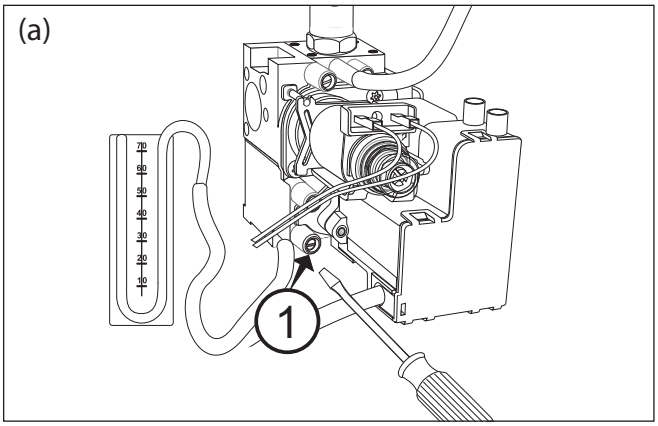


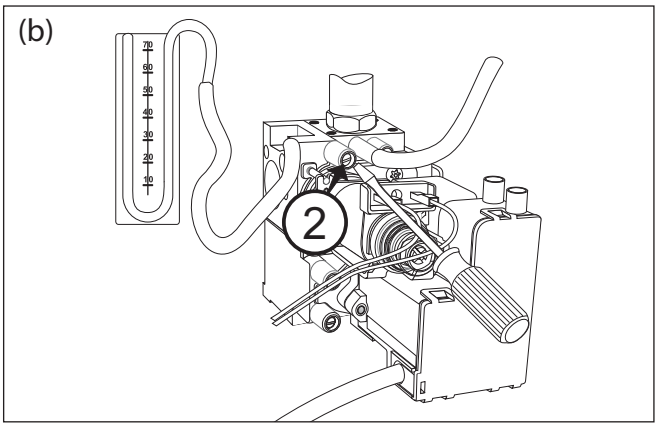


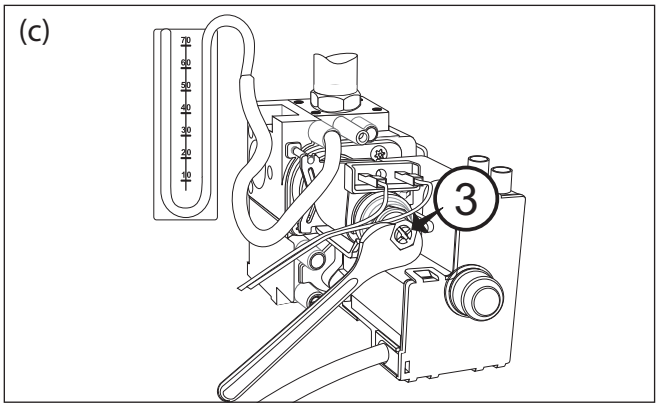


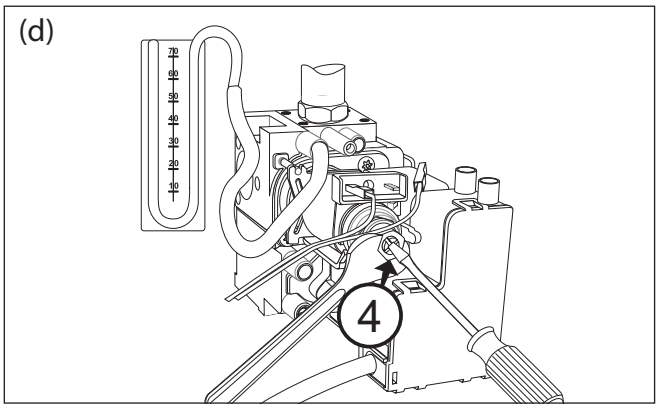

## Accessing the settings and adjustment menus

**menu 2** - Boiler parameters
**submenu 3** - **parameter 1**
**Maximum Heating Power adjustment**
**submenu 2** - **parameter 0**
Soft light Ignition
**submenu 3** - **parameter 5 and 6**
**Heating ignition delay**
**sottomenu 3** - **parametro 0**
**Maximum Absolute Heating Power**
(This parameter must be changed only to change gas or replace P.C.B.)

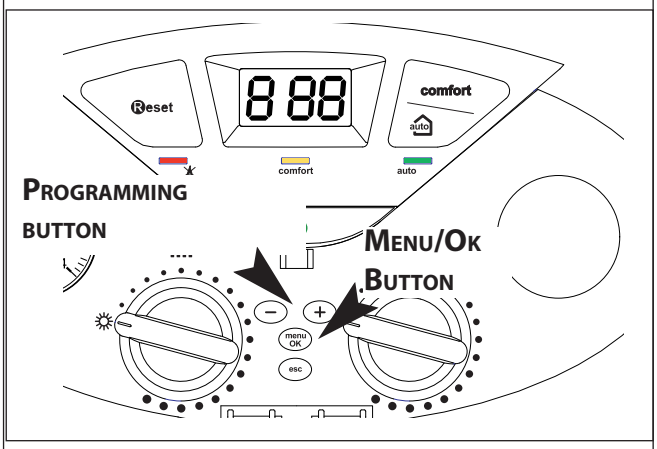


The information relating to the menus and the individual parameters are indicated on the display.

To access Menu 2, open the cover and proceed as follows:

1. Press the MENU/OK button; the first figure 000 will flash on the display.
2. Press the "+" button to select menu "200"
3. Press the MENU/OK button; the second figur on the display will flash and the access code "210" will be requested.
   **Caution!** The menus reserved for qualified technicians may only be accessed after setting the access code.
4. Press the MENU/OK button; 222 will appear on the display unit.
5. Press the "+" button to select code 234.
6. Press the MENU/OK button to select the sub menu; the second figure "280" will flash.
7. Press the "+" button to select the sub menu, for example: "230".
8. Press the MENU/OK button to access the sub menu parameters; the third figure "230" will flash.
9. Turn the encoder to select the parameter; the text on the display will indicate the title of the pre-selected parameter "231 - Max. Adjustable Heating Power Level".
10. Press the "+" or "-" button to access the parameter; the display will indicate the value, e.g "76".
    **Note:** The parameter value will be displayed for 20 seconds, then will begin to flash in alternation with the parameter, e.g. "70 > 231".
11. Press the "+" or "-" button to select the new value, e.g. "75".
12. Press MENU/OK to save the change or press ESC to exit without saving.

To exit, press the ESC button until the normal display screen is restored.

**Maximum Heating Power adjustment**
The maximum heating power can be adjusted to between the maximum power (shown on the display as "99", ) allowed by the boiler and the minimum power (shown on the display as "0", ).
To check the maximum heating power, access menu 2/sub menu 3/parameter 1, check the value and, if necessary, modify it as indicated in the Heating Power Adjustment table.

**Checking slow ignition power**
The soft light can be adjusted between the maximum power (shown on the display as "99", ) and the minimum power (shown on the display as "0", ).
Change the parameter if the outlet pressure from the gas valve in the ignition phase (measured when the boiler is in hot water heating operation) does not coincide with the values shown in the Gas Table:
To check the slow ignition power, access menu 2/sub menu 2/parameter 0.
If needed, change the parameter value until suitable pressure is achieved.

**Heating ignition delay adjustment**
This parameter – menu 2/sub menu 3/parameter 5 - can be used to manually (0) or automatically (1) set the delay time before the subsequent reignition of the burner after it has switched off on reaching the desired temperature.
By selecting manual, it is possible to set the delay in minutes using the successive parameter (menu 2/sub menu 3/parameter 6), to a time between 0 and 7 minutes.
Automatic selection means that the boiler will establish the delay time based on the set-point temperature.

**Checking maximum absolute heating power**
(ONLY IN CASE OF GAS CHANGE OR P.C.B. REPLACEMENT)
To check/modify the maximum absolute heating power, access the gas valve and proceed as follows:

1. Loosen screw "2" (Fig. b) and insert the pressure gauge connection pipe into the pipe tap.
2. Disconnect the air chamber compensation tube.
3. Switch the boiler on at maximum heating power, enabling the "chimney sweep" function (press the Reset key for 5 seconds; the display shows t --.
   The supply pressure should correspond to the value shown in the "Gas Settings" table according to the type of gas for which the boiler is designed. If it does not correspond, access menu 2/sub menu 3/parameter 0 and press the + and - buttons to modify the value until the pressure indicated in the Gas Table has been reached.
4. When the check is complete, tighten screw "2" and make sure it is securely in place.
5. The "chimney sweep" function is deactivated either automatically after 10 minutes or when the ESC button is pressed.

| Heating Power Adjustment | | | | | | | | | | |
|---|---|---|---|---|---|---|---|---|---|---|
| CLAS 24 FF CLAS SYSTEM 21 FF | **Gas** | **Heating Power (kW)** | **9,8** | **12,5** | **14,5** | **16,5** | **20,0** | **22,0** | **24,0** | |
| | G20 | mbar | 2,3 | 3,8 | 5,1 | 6,7 | 7,6 | 9,2 | 11,0 | |
| | | Parameter 2 3 1 | 0 | 40 | 45 | 50 | 53 | 57 | 62 | |
| | G30 | mbar | 4,5 | 7,5 | 10,1 | 13,0 | 18,2 | 22,0 | 26,2 | |
| | | Parameter 2 3 1 | 0 | 54 | 60 | 66 | 75 | 81 | 87 | |
| | G31 | mbar | 6,3 | 10,5 | 14,1 | 18,2 | 23,3 | 28,1 | 33,5 | |
| | | Parameter 2 3 1 | 0 | 61 | 68 | 75 | 82 | 89 | 96 | |
| CLAS 30 FF CLAS SYSTEM 28 FF | **Gas** | **Heating Power (kW)** | **12,1** | **14** | **16** | **18** | **20** | **24** | **26** | **28** |
| | G20 | mbar | 2,3 | 3,4 | 4,4 | 5,5 | 6,8 | 8,9 | 10,4 | 12,1 |
| | | Parameter 2 3 1 | 0 | 36 | 41 | 45 | 49 | 57 | 61 | 64 |
| | G30 | mbar | 5,1 | 7,4 | 9,7 | 12,3 | 15,2 | 19,1 | 22,4 | 26,0 |
| | | Parameter 2 3 1 | 0 | 51 | 57 | 62 | 69 | 76 | 81 | 84 |
| | G31 | mbar | 6,2 | 9,0 | 11,8 | 14,9 | 18,4 | 24,4 | 28,6 | 33,2 |
| | | Parameter 2 3 1 | 0 | 54 | 61 | 67 | 73 | 83 | 89 | 95 |

| **Gas Table** | | **CLAS 24 FF** | | | **CLAS 30 FF** | | |
|---|---|---|---|---|---|---|---|
| | | **CLAS 21 FF SYSTEM** | | | **CLAS 28 FF SYSTEM** | | |
| | | **G20** | **G30** | **G31 (propane)** | **G20** | **G30** | **G31 (propane)** |
| lower Wobbe index (15°C, 1013 mbar) (MJ/m3) | | 45.67 | 80.58 | 70.69 | 45.67 | 80.58 | 70.69 |
| Gas Inlet Pressure | | 20 | 28/30 | 37 | 20 | 28/30 | 37 |
| Gas Burner Pressure (mbar) | maximum D.H.W. | 12,2 | 27,7 | 35,5 | 12,9 | 27,7 | 35,8 |
| | maximum heating (absolute) (Menu 2/ submenu 3/ parameter 0) | 11 (62) | 26,2 (87) | 33,5 (96) | 12,2 (64) | 26,0 (85) | 33,5 (95) |
| | minimum | 2,3 | 4,5 | 6,3 | 2,3 | 5,1 | 6,0 |
| Soft light mbar (Menu 2/ sub menu 2/ parameter 0) | | 5,0 (51) | 11,2 (63) | 11,2 (63) | 5,49 (47) | 9,51 (58) | 9,51 (58) |
| Maximum heating power adjustment (Menu 2/sub menu 3/ parameter 1) | | 46 | 66 | 66 | 49 | 66 | 71 |
| Ignition delay (Menu 2/ sub menu 3/ parameter 5) | | automatic | | | automatic | | |
| Main Burner jets nr. | | 13 | | | 13 | | |
| Main Burner jets Ø | | 1,25 | 0,75 | 0,75 | 1,32 | 0,8 | 0,8 |
| Max/min consumption (15°C, 1013 mbar) (G.N.= $m^3$/h) (GPL = Kg/h) | maximum D.H.W. | 2,86 | 2,13 | 2,10 | 3,31 | 2,47 | 2,43 |
| | maximum heating (absolute) | 2,73 | 2,03 | 2,00 | 3,17 | 2,37 | 2,33 |
| | minimum | 1,16 | 0,87 | 0,85 | 1,38 | 1,03 | 1,01 |

**Gas changeover**
The boiler can be converted to use either methane (natural) gas (G20) or L.P.G. (G30 - G31) by an Authorised Service Centre.
The operations that must be performed are the following:
1. switch off the the electrical supply to the appliance
2. turn off the gas cock
3. disconnect the electrical connections to the boiler
4. gain access to the combustion chamber, as indicated in the paragraph "Maintenance Guide - General Access"
5. replace the jets and attach the labels as directed in the instruction sheet for the Kit.
6. check that all connections are gas-tight
7. start up the boiler
8. perform the gas adjustment (see the paragraph "Checking the gas setting")
   - maximum - hot water
   - minimum
   - **maximum absolute heating power**
   - **maximum Heating Power adjustment**
   - oft-light feature
   - ignition delay feature for the heating system
9. carry out combustion analysis.

**Auto function**

This is a function which enables the boiler to automatically adapt its operation routine (the temperature of the radiators) in line with the outdoor conditions, in order to achieve and maintain the requested room temperature conditions.
Depending on the peripheral units connected and the number of zones controlled, the boiler adjusts its flow temperature automatically.
The various corresponding parameters should therefore be set (see adjustments menu).
To activate the function, press the Auto button

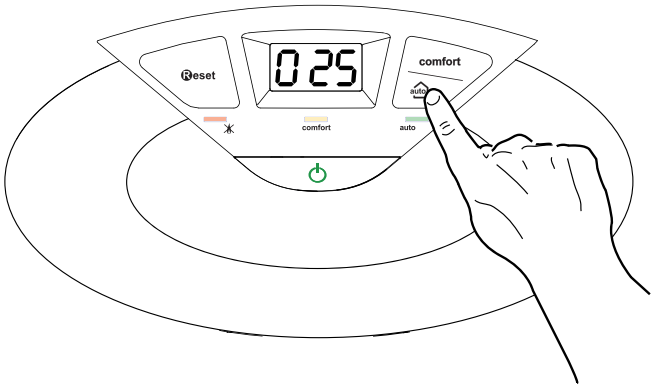


**Example 1:**

Single zone system (high-temperature) with on/off room Thermostat:
In this case the following parameters must be set:

4 21 - Activation of temperature adjustment using sensors
- Select 01 = Basic temperature adjustment

2 44 - Boost Time (optional)
The wait time for the flow temperature increase in steps of 4°C may be set. The value varies according to the type of system and installation.
If the Boost Time value = 00 the function is not activated.

**Example 2:**

Single zone system (high-temperature) with on/off room Thermostat + outdoor sensor:
In this case the following parameters must be set:

4 21 - Activation of temperature adjustment using sensors
- Select 03 = outdoor sensor only

4 22 - Temperature adjustment curve selection (see *page* 39)
- Select the relevant curve according to the type of system, installation, heat insulation used in the building, etc.

4 23 - Perform a parallel curve shift if necessary, increasing or decreasing the set-point temperature (this may also be modified by the user, using the heating temperature adjustment knob, which, with the Auto function activated, is used to shift the curve in a parallel manner).

**Example 3:**

Single zone system (high-temperature) with REMOCON remote Control + outdoor sensor
In this case the following parameters must be set:

4 21 - Activation of temperature adjustment using sensors
- select 04 = outdoor sensor + room sensor

4 22 - Temperature adjustment curve selection (see *page* 39)
- Select the relevant curve according to the type of system, installation, heat insulation used in the building, etc

4 23 - Perform a parallel curve shift if necessary, increasing or decreasing the set-point temperature. (This may also be changed by the user by the encoder which, with the Auto function activated, is used to shift the curve in a parallel manner.)

4 24 - Influence of room sensor
- used to adjust the influence the room temperature has on the calculation of the set-point flow temperature (20 = maximum, 0 = minimum).

**Boiler protection devices**
The boiler is protected from malfunctioning by means of internal checks performed by the electronic microprocessor P.C.B., which stops the boiler from operating if necessary.
In the event of the boiler being shut off in this manner, a code appears on the display which refers to the type of shut-off and the reason behind it. There are two types of shut-off:

**Safety shut-off**
This type of error is "non-volatile", which means that the boiler starts up again automatically as soon as the problem which caused the shut-off is removed; on the display and flash "Err" and the error code (es: ERR / 101).
In fact, as soon as the cause of the shut-off disappears, the boiler starts up again and continues to operate normally.

**Safety shut-off due to insufficient water pressure**
If the water pressure inside the heating circuit is insufficient, the boiler will perform a safety shut-off. The display will flash "Err" and the code for Insufficient circulation 103, 104, 105, 106 or 107 (ERR 101)

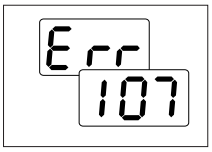


Check the water pressure on the pressure gauge and make sure that is between 0.6 and1.5 bar when the system is cold. If the pressure is just under the minimum refill the system by connecting the silver flexible hose supplied to the two isolating points underneath the boiler, once the hose is connected, open up both of the grey quarter turn handles, once the pressure reads 1.5 bar on the display, close both handles and disconnect the hose .
If the pressure drops very frequently, there may be a water leak at some point in the system. If this is the case please contact your installer and ask them to check it.

In this case or if the re-balancing request is performed on a frequent basis, switch the boiler off, bring the external electric switch to the OFF position, shut off the gas valve and contact a qualified technician to check for any leaks of water.

**Shutdown**
This type of error is "non-volatile", which means that it is not removed automatically. On the display flash "Err" and the error code (es: ERR / 501).To restore normal operation press the **Reset** button on the control panel.
The first figure of the error code (e.g. 1 01) indicates within which operational assembly the error occurred.
1 - Primary Circuit
2 - Domestic Hot Water Circuit
3 - Internal Electronic Part
4 - External Electronic Part
5 - Ignition and Detection
6 - Air inlet - flue gas outlet
7 - Multizone

**Malfunction warning**
This warning is shown by the display in the following format:
5 P3 = Flame cut-off
the first figure indicating the operational assembly is followed by a P (warning) and the code relating to the specific warning.

**Important**
If this shutdown occurs frequently, contact an authorised Technical Service Centre for assistance. For safety reasons, the boiler will permit a maximum of 5 resets in 15 minutes (5 presses of the RESET button); at the 6th attempt within this 15-minute period the boiler will shut down and may only be operated again after the electricity supply has been disconnected. If the shutdown is occasional or an isolated event, this is not a problem.

**Table summarising error codes**

| **Central Heating circuit** | | |
|---|---|---|
| Display | Description | |
| 1 01 | Overheat | |
| 1 02 | Pressure Sensor Error | |
| 1 03 | Insufficient circulation | |
| 1 04 | | |
| 1 05 | | |
| 1 06 | | |
| 1 07 | | |
| 1 10 | C.H. Flow temp. probe circuit open / short circuit | |
| 1 12 | C.H. Return temp. probe circuit open / short circuit | |
| 1 14 | External sensor circuit open / short circuit | |
| 1 P1 | Insufficient circulation indication | |
| 1 P2 | | |
| 1 P3 | | |
| **D.H.W. circuit** | | |
| 2 01 | D.H.W. temp. probe circuit open / short circuit | |
| 2 02 | Circuito aperto o cortocircuito sonda accumulo bassa | Kit solare (optional) |
| 2 04 | Circuito aperto o cortocircuito sonda collettore solare | |
| 2 07 | Sovratemperatura collettore solare | |
| 2 08 | Intervento antigelo collettore solare | |
| **Internal P.C.B.'s** | | |
| 3 01 | EEPROM error | |
| 3 02 | Communication error | |
| 3 03 | Main P.C.B. error | |
| 3 05 | Main P.C.B. error | |
| 3 06 | Main P.C.B. error | |
| 3 07 | Main P.C.B. error | |
| **External P.C.B.'s** | | |
| 4 07 | Room sensor circuit open short circuit | |
| **Ignition and Detection** | | |
| 5 01 | No flame detected | |
| 5 02 | Flame detected with gas valve closed | |
| 5 P4 | 3 flame cut-offs detected in one cycle | |
| **Air Inlet / Flue gas outlet** | | |
| 6 04 | Insufficient fan speed | |
| 6 07 | Air pressure switch closed permanently | |
| 6 P1 | Delay in air pressure switch closing | |
| 6 P2 | APS close-open | |
| **Multizone (optional)** | | |
| 7 01 | Zone2 Send Probe Damaged | |
| 7 02 | Zone2 Return Probe Damaged | |
| 7 03 | Zone3 Send Probe Damaged | |
| 7 04 | Zone3 Return Probe Damaged | |
| 7 05 | Hydraucic Comp. Probe Damaged | |
| 7 06 | Zone2 Overheat | |
| 7 07 | Zone3 Overheat | |

**Anti-frost Device.**
The anti-frost function acts on the central heating flow temperature probe, independently from other regulations, when the electrical supply is turned on.
If the primary circuit temperature falls below 8°C the pump will run for 2 minutes.
After the two minutes of circulation (fixed) the boiler will check the following:
a) if the central heating flow temperature is > 8°C, the pump stops;
b) if the primary flow temperature is between 4 and 8°C, the pump will run for another two minutes;
c) if the primary flow temperature is < 4°C, the burner will fire (heating position) at minimum power until the temperature reaches 33°C, the burner will go out and the pump will continue to run for two minutes.
If the flow temperature remains between 4-8°C the pump will continue to run for two minutes for a maximum of 10 times unless a temperature above 8°C is detected in the primary flow, after this the the burner will fire.
If lockout is caused by overheat the burner is kept OFF.
**Note**: In all cases, the circulation takes place in the central heating system.
The anti-frost device activates only when (with the boiler operating correctly):
- the system pressure is correct;
- the boiler is electrically powered;
- there is a supply of gas.

**Combustion Analysis**
The flue connector has two apertures, readings can be taken for the temperature of the combustion by-products and of the combustion air, as well as of the concentrations of O2 and CO2, etc.
To access these intakes it is necessary to unscrew the front screw and remove the metal plate with sealing gasket.
It is possible to activate the flue test mode by pressing and holding the Reset button for 10 seconds.
The boiler will return to normal operation after 10 minutes. The boiler can be returned to normal operation sooner by switching the boiler off and on again.
When you have finished, reposition the metal plate correctly and make sure the seal fits perfectly.

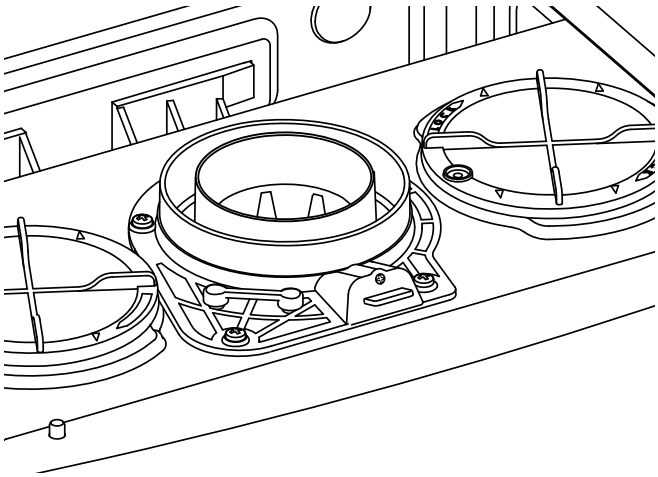

**Flue test mode**
The P.C.B. enables the boiler to be forced to its maximum or minimum power.
By activating the Flue test mode, (pressing the Reset button for 10 seconds), the boiler will be forced to its maximum heating power and the display shows:

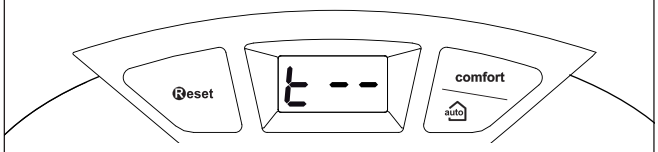


To select operation at maximum power, press the "+" button and the following will appear on the display:

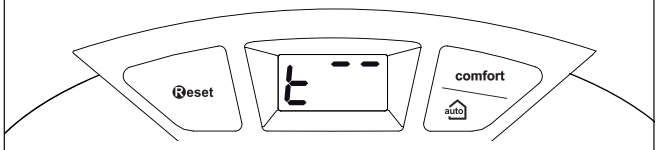


To select operation at minimum power, press the "-" button and the following will appear on the display:

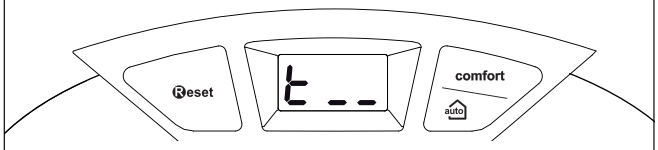


This function is de-activated automatically after 10 minutes, or when the Esc button is pressed.
**Note:** The boiler can also be forced to its maximum and minimum power by accessing menu 7 (see settings - adjustment - problem identification menu paragraph).

**Product of Combustion**
**Discharge Monitoring**
In the boiler, it is possible to monitor the correct operation of the flue exhaust/air intake, checking for a loss of general pressure in the system. Through the use of a differential manometer connected to the test points of the combustion chamber, it is possible to detect the ΔP of operation of the air pressure switch.
The value detected should not be less than 0.46 mbar (24/21 FF) - 0.70 mbar (28/32 FF) under conditions of maximum thermal power in order for the boiler to function properly and without interruption.

**Accessing the settings - adjustment - problem identification menus**

The boiler can be used to manage the heating and domestic hot water production system in its entirety.

Navigation within the menus enables the boiler system + connected peripheral units to be customised, optimising operation for maximum comfort and maximum saving. It also provides important information relating to the efficient operation of the boiler.

The available menus are as follows:

| | | |
|---|---|---|
| **2** | **Boiler Parameter** | |
| 2 | 1 | Service code *(access reserved for qualified engineers)* |
| 2 | 2 | General setting |
| 2 | 3 | C.H. Parameters - Part 1 |
| 2 | 4 | C.H. Parameters - Part 1 |
| 2 | 5 | Domestic Hot Water (Combi only) |
| 2 | 9 | Menu 2 Reset to factory setting |
| **3** | **Solar & Storage** | |
| 3 | 0 | General setting |
| 3 | 1 | Service code *(access reserved for qualified engineers)* |
| 3 | 2 | Special setting |
| **4** | **Zone 1 Parameters** | |
| 4 | 0 | Set-point Zone1 |
| 4 | 1 | Service code *(access reserved for qualified engineers)* |
| 4 | 2 | Zone 1 Setting |
| 4 | 3 | Diagnostics |
| 4 | 4 | Zone device mangement |
| 5 | **Zone 2 Parameters** | |
| 5 | 0 | Set-point Zone2 |
| 5 | 1 | Service code *(access reserved for qualified engineers)* |
| 5 | 2 | Zone 2 Setting |
| 5 | 3 | Diagnostics |
| 5 | 4 | Zone device mangement |
| 5 | 5 | Multizone |
| **7** | **Test & Utilities** | |
| **8** | **Service Parameter** | |
| 8 | 1 | Service code *(access reserved for qualified engineers)* |
| 8 | 2 | Boiler |
| 8 | 3 | Boiler Temperature |
| 8 | 4 | Solar & Storage |
| 8 | 5 | Service |
| 8 | 6 | Statistics |
| 8 | 7 | NOT ACTIVE |
| 8 | 8 | Error History |

The parameters relating to each individual menu are listed in the following pages.

The various parameters can be accessed and modified using th Menu/Ok button and the +/- buttons (see fig. below). The code of the menus and of each individual parameter will be shown on the display.

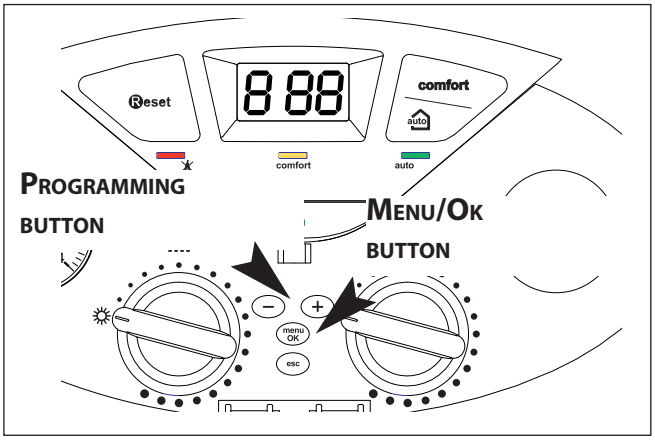


The information relating to the menus and the individual parameters are indicated on the display.

To access Menu 2, open the cover and proceed as follows:

1. Press the Menu/Ok button; the first figure 800 will flash on the display.
2. Press the "+" button to select menu "200"
3. Press the Menu/Ok button; the second figur on the display will flash and the access code "210" will be requested.
   **Caution!** The menus reserved for qualified technicians may only be accessed after setting the access code.
4. Press the Menu/Ok button; 222 will appear on the display unit.
5. Press the "+" button to select code 234.
6. Press the Menu/Ok button to select the sub menu; the second figure "280" will flash.
7. Press the "+" button to select the sub menu, for example: "230".
8. Press the Menu/Ok button to access the sub menu parameters; the third figure "230" will flash.
9. Press the +/- buttons to select the parameter; then press the Menu/Ok button.
10. Press the "+" or "-" button to access the parameter; the display will indicate the value, e.g " 16".
    **Note:** The parameter value will be displayed for 20 seconds, then will begin to flash in alternation with the parameter, e.g. " 10 > 231".
11. Press the "+" or "-" button to select the new value, e.g. " 15".
12. Press Menu/Ok to save the change or press Esc to exit without saving.

To exit, press the ESC button until the normal display screen is restored.

| menu | sub-menu | parameter | Description | range | factory setting | |
|---|---|---|---|---|---|---|
| **2** | **BOILER PARAMETER** | | | | | |
| **2** | **1** | | **Service code** | | 222 | Press +/- to select code 234 and press MENU/OK |
| **2** | **2** | | **BOILER GENERAL SETTINGS** | | | |
| **2** | **2** | **0** | Soft ignition | from 0 to 90 | | see Gas Settings (pages 29 and 30) |
| **2** | **2** | **1** | Zone Frost Temperature (Room Temperature) | from 2 to 10 (°C) | | only active when the BUS device is connected |
| **2** | **2** | **2** | NOT PRESENT | | | |
| **2** | **2** | **3** | NOT PRESENT | | | |
| **2** | **2** | **4** | NOT PRESENT | | | |
| **2** | **2** | **5** | Central Heating Start Delay | 0= Disabled<br>1= 10 seconds<br>2= 90 seconds<br>3= 210 seconds | 0 | Active only with 2-zone p.c.b. (optional) |
| **2** | **2** | **6** | NOT PRESENT | | | |
| **2** | **2** | **7** | NOT PRESENT | | | |
| **2** | **2** | **8** | Boiler version - **NOT TO MODIFY** | from 0 to 5<br>0 = combi (CLAS)<br>1 = Storage with NTC<br>2 = Storage with Thermostat (CLAS SYSTEM)<br>3 - 4 - 5 = DO NOT USE | 0<br><br>2 | ONLY FOR SERVICE - To be used only in substitution P.C.B. |
| **2** | **3** | | **CENTRAL HEATING PARAMETER - PART 1** | | | |
| **2** | **3** | **0** | Maximum Central Heating Aboslute power | from 0 to 99 | | ONLY FOR SERVICE - To be used only in substitution P.C.B.<br>see Gas Settings (pages 29 and 30) |
| **2** | **3** | **1** | Maximum Central Heating power<br>Adjustable heating | from 0 to 99 | | see Gas Settings (pages 29 and 30) |
| **2** | **3** | **2** | NOT PRESENT | | | |
| **2** | **3** | **3** | NOT PRESENT | | | |
| **2** | **3** | **4** | NOT PRESENT | | | |
| **2** | **3** | **5** | Anti-cycling time mode | 0 = Manual<br>1 = automatic | 0 | see Gas Settings (pages 29 and 30) |
| **2** | **3** | **6** | Anti-cycling time<br>If 235 = 0 | from 0 to 7 (minutes) | 3 | |
| **2** | **3** | **7** | Central Heating pump overrun | from 0 to 15 (minutes)<br>o CO (continuos) | 3 | |
| **2** | **3** | **8** | Pump speed control | 0 = Low speed<br>1 = High speed<br>2 = Modulating | 2 | |
| **2** | **3** | **9** | Set Delta T Pump | from 10 to 30 (°C) | 20 | Parameter to set if Pump Speed control (238) is set to modulating |
| | | | ΔT (flow - return) for circulation pump modulation<br>This parameter can be used to set the difference between the flow and return temperatures, which determines the commutation between low and high circulation pump speed.<br>E.g.: param. = 20 if the Tflow - Tret > 20°C; the circulation pump will be activated at maximum speed.<br>If the Tflow - Tret < 20 - 2°C; the circulation pump will be activated at minimum speed.<br>The minimum wait time between speed changes is 5 minutes. | | | |

| menu | sub-menu | parameter | Description | range | factory setting | |
|---|---|---|---|---|---|---|
| 2 | 4 | | **CENTRAL HEATING PARAMETER - PART 1** | | | |
| 2 | 4 | 0 | NOT PRESENT | | | |
| 2 | 4 | 1 | NOT PRESENT | | | |
| 2 | 4 | 2 | NOT PRESENT | | | |
| 2 | 4 | 3 | Post-ventilation after Central Heating request | 0 = OFF<br>1 = ON | 1 | |
| 2 | 4 | 4 | Boost Time | from 0 to 60 (minutes) | | only enabled with Room Thermostat on/off and temperature adjustment activated (parameter 421 or 521 on 01 = Basic temperature adjustment) |
| | | | This parameter can be used to set the delay time before the automatic increase in flow temperature, in steps of 4°C (max. 12°C). If the value of this parameter remains at 00 the function is not activated. | | | |
| 2 | 4 | 5 | NOT PRESENT | | | |
| 2 | 4 | 6 | NOT PRESENT | | | |
| 2 | 4 | 7 | Central Heating Pressure Detection Device | 0 = Temperature Probes only (COMBI)<br>1 = Pressure Switch (SYSTEM)<br>2 = Pressure Sensor | 0 | ONLY FOR SERVICE - To be used only in substitution P.C.B. |
| 2 | 4 | 8 | NOT PRESENT | | | |
| 2 | 5 | | **DOMESTIC HOT WATER (COMBI)** | | | |
| 2 | 5 | 0 | COMFORT FUNCTION (COMBI) | 0 = Disabled<br>1 = Time Based<br>2 = Always active | 1 | Time Based =Active for 30 minutes after a D.H.W. request |
| | | | The "COMFORT" function of the appliance can be used to increase the comfort level of the user when drawing hot water. This function keeps the secondary exchanger hot during periods of boiler inactivity; this increases the initial heat status of the water drawn, as the water is delivered at a higher temperature. Press the MENU/OK button to enable the modification.<br>When the function is enabled the text COMFORT LED is illuminated.<br>This function may also be enabled or disabled by pressing the COMFORT button. | | | |
| 2 | 5 | 1 | Comfort Anti-cycling Time (COMBI) | from 0 to 120 minutes | 0 | |
| 2 | 5 | 2 | DHW Start Delay (COMBI) | From 5 to 200 (from 0,5 o 20 seconds) | 5 | |
| 2 | 5 | 3 | D.H.W. switch logic (COMBI) | 0 = Anti-scale (stop at > 67°C)<br>1 = At 4°C over set-point | | ONLY FOR SERVICE - To be used only in substitution P.C.B. |
| 2 | 5 | 4 | Post-circulation and post-ventilation after domestic hot water is drawn | 0 = OFF<br>1 = ON | | |
| 2 | 5 | 5 | Delay start in Central Heating after D.H.W. request | from 0 to 30 (minutes) | 0 | |
| 2 | 9 | | **RESET MENU' 2** | | | |
| 2 | 9 | 0 | RESET MENU 2 Reset factory settings | "Reset?OK=Yes, Esc=No" | | |
| 3 | | | **BOILER WITH STORAGE (INSIDE OR OUTSIDE) AND BOILER WITH SOLAR KIT** | | | |
| 3 | 0 | | **GENERAL SETTINGS** | | | |
| 3 | 0 | 0 | Storage Setpoint Temperature - NOT ACTIVE | | | |
| 3 | 0 | 1 | NOT ACTIVE | | | For boiler with solar Kit connected |
| 3 | 0 | 2 | NOT ACTIVE | | | |
| 3 | 1 | | **Service code** | | 222 | Press +/- to select code 234 and press MENU/OK |

| menu | sub-menu | parameter | Description | range | factory setting | |
|---|---|---|---|---|---|---|
| **3** | **2** | **SPECIAL SETTINGS** | | | | |
| 3 | 2 | 0 | Anti-legionella Function - NOT ACTIVE | | | Only for boiler with storage inside |
| **3** | **2** | **1** | Solar Configuration Type | 0 = Nothing or single coil Natural circulation<br>1 = Single coil Forced circulation<br>2 = Double coil | 0 | Select 1 or 2 only if the Solar Kit is installed |
| 3 | 2 | 2 | Electrical Mixing valve | | | Only with Solar Kit is installed |
| 3 | 2 | 3 | Collector Delta T pump ON | | | |
| 3 | 2 | 4 | Collector Delta T pump OFF | | | |
| 3 | 2 | 5 | Minimum Collector Temperature Pump ON | | | |
| 3 | 2 | 6 | Kollectorkick | | | |
| 3 | 2 | 7 | Recooling Function | | | |
| 3 | 2 | 8 | Gas storage set point Delta | | | |
| 3 | 2 | 9 | Collector Frost protection Temperature | | | |
| **4** | **ZONE 1 PARAMETERS** | | | | | |
| **4** | **0** | **ZONE 1 SET TEMPERATURE** | | | | |
| 4 | 0 | 0 | Set Day Temperature Zona 1 | from 16 to 30 (°C) | 19 | only active when the BUS device is connected |
| 4 | 0 | 1 | Set Night Temperature Zona 1 | from 16 to 30 (°C) | 16 | |
| **4** | **0** | **2** | Fix temperature central heating | from 35 to85 (°C) | 70 | To set only with Fixed Flow Temperaure of Thermoregulation (see 421) |
| **4** | **1** | **Service code** | | | 222 | Rotate encoder clockwise to select code 234 and press MENU/OK |
| **4** | **2** | **SET ZONE 1** | | | | |
| 4 | 2 | 0 | Zone 1 Temperature range<br>DO NOT MODIFY | 0= Low Temperature<br>1= High Temperature | | ONLY FOR SERVICE<br>Active only with MGZ/MCM Kit |
| **4** | **2** | **1** | Select Type of Thermoregulation | 0 = Fixed Flow Temperature<br>1 = Basic Thermoregulation<br>2 = Room Temperature only<br>3 = Outdoor Temperature only<br>4 = Room + Outdoor Temperature | 1 | To enabled thermoregulation press Auto button. The display show the symbol. |
| **4** | **2** | **2** | Zone 1 Slope | from 0_2 to 3_5 | 1_5 | Only enabled when an outdoor sensor is installed |

When an outdoor sensor is used, the boiler calculates the most suitable delivery temperature, taking into account the outside temperature and type of system.
The type of curve should be selected in correspondence with the projected temperature of the system and the nature of the dispersions present in the structure.
For high-temperature systems, one of the curves depicted in the chart may be chosen.

1.0 - 1.5 = Standard System
2.0 - 3.5 = Convector Radiators

**Note:** The Outdoor Sensor should only be used when the boiler is used for central heating only.

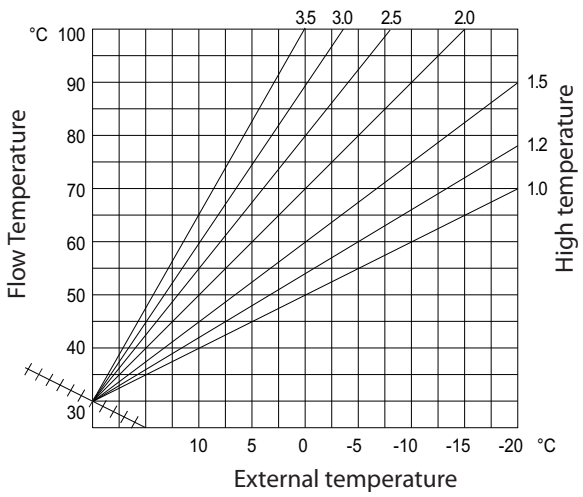

| menu | sub-menu | parameter | Description | range | factory setting | |
|---|---|---|---|---|---|---|
| 4 | 2 | 3 | Parallel curve shift Zone 1 Offset | from - 20 to + 20 | 0 | |
| | | | To adapt the heating curve to the system requirements, shift the curve in parallel so that the calculated flow temperature is modified, in addition to the room temperature.<br>By accessing this parameter and turning knob **"5" (Figs 1 and 2 - page 4)**, the curve can be shifted in a parallel manner.<br>The value is indicated on the display, from -20 to +20. | | | |
| 4 | 2 | 4 | Room sensor Influence to calculate the set-point temperature - Thermoregulation enabled- | from 0 to 20 | 20 | |
| | | | | If set to = 0 the room temperature doesn't influence the calculation of the set-point.<br>If set to = 20, the room temperature has the maximun influence to calculate the set-point - only active when the BUS device is connected | | |
| 4 | 2 | 5 | Maximum Central Heating Temperature Zone1 | from 40 to 82 (°C) | 82 | |
| 4 | 2 | 6 | Minimum Central Heating Temperature Zone 1 | from 40 to 82 (°C) | 40 | |
| 4 | 3 | **DIAGNOSTICS** | | | | |
| 4 | 3 | 0 | Room Temperature Zone 1 - only active when the BUS device is connected | | | |
| 4 | 3 | 1 | Flow Temperature Zone 1 - only active when the BUS device is connected | | | |
| 4 | 3 | 2 | Zone 1 Heat Request | 0 = OFF 1 =ON | | |
| 4 | 3 | 3 | Zone 1 Pump status | 0 = OFF 1 =ON | | Active only with MGZ/MCM Kit |
| 4 | 4 | **ZONE 1 DEVICES** | | | | |
| 4 | 4 | 0 | Zone 1 Pump control | 0 = OFF 1 =ON | | Active only with MGZ/MCM Kit |
| 5 | **ZONE 2 PARAMETER** | | | | | |
| 5 | 0 | **ZONE 2 SET TEMPERATURE** | | | | |
| 5 | 0 | 0 | Set Day Temperature Zona 2 | from 16 to 30 (°C) | 19 | only active when the BUS device is connected |
| 5 | 0 | 1 | Set Night Temperature Zona 2 | from 16 to 30 (°C) | 16 | |
| 5 | 0 | 2 | Fix temperature central heating | from 35 to85 (°C) | 70 | To set only with Fixed Flow Temperaure of Thermoregulation (see 521) |
| 5 | 1 | **Service code** | | | 222 | Press +/- to select code 234 and press MENU/OK |
| 5 | 2 | **SET ZONE 2** | | | | |
| 5 | 2 | 0 | Zone 2 Temperature range<br>DO NOT MODIFY | 0= Low Temperature<br>1= High Temperature | | ONLY FOR SERVICE<br>Active only with MGZ/MCM Kit |
| 5 | 2 | 1 | Select Type of Thermoregulation | 0 = Fixed Flow Temperature<br>1 = Basic Thermoregulation<br>2 = Room Temperature only<br>3 = Outdoor Temperature only<br>4 = Room + Outdoor Temperature | 1 | To enabled thermoregulation press Auto button. The display show the symbol. |
| 5 | 2 | 2 | Zone 1 Slope | from 0_2 to 3_5 | 1_5 | Only enabled when an outdoor sensor is installed |
| | | | When an outdoor sensor is used, the boiler calculates the most suitable delivery temperature, taking into account the outside temperature and type of system.<br>The type of curve should be selected in correspondence with the projected temperature of the system and the nature of the dispersions present in the structure. For high-temperature systems, one of the curves depicted in the chart may be chosen.<br><br>1.0 - 1.5 = Standard System<br>2.0 - 3.5 = Convector Radiators<br><br>**Note:** The Outdoor Sensor should only be used when the boiler is used for central heating only. | | | see graph previous page<br>prameter 4 2 2 |

| menu | sub-menu | parameter | Description | range | factory setting | |
|---|---|---|---|---|---|---|
| **5** | **2** | **3** | Parallel curve shift Zone 2 Offset | from - 20 to + 20 | 0 | |
| | | | To adapt the heating curve to the system requirements, shift the curve in parallel so that the calculated flow temperature is modified, in addition to the room temperature.<br>By accessing this parameter and turning knob **"5" (Figs 1 and 2 - page 4)**, the curve can be shifted in a parallel manner.<br>The value is indicated on the display, from -20 to +20. | | | |
| **5** | **2** | **4** | Room sensor Influence to calculate the set-point temperature - Thermoregulation enabled- | from 0 to 20 | 20 | |
| | | | | If setted = 0 the room temperature doesn't influence the calculation of the set-point.<br>If setted = 20, the room temperature has the maximun influence to calculate the set-point - only active when the BUS device is connected | | |
| **5** | **2** | **5** | Maximum Central Heating Temperature Zone2 | from 40 to 82 (°C) | 82 | |
| **5** | **2** | **6** | Minimum Central Heating Temperature Zone 2 | from 40 to 82 (°C) | 40 | |
| **5** | **3** | **DIAGNOSTICS** | | | | display only |
| 5 | 3 | 0 | Room Temperature Zone 2 - only active when the BUS device is connected | | | |
| 5 | 3 | 1 | Flow Temperature Zone 2 - only active with MGZ/MCM Kit | | | |
| 5 | 3 | 2 | Return Temperature Zone 2 - only active with MGZ/MCM Kit | | | |
| 5 | 3 | 3 | Set Temperature Zone 2 -only active when the BUS device is connected | | | |
| 5 | 3 | 4 | Heat Request Zone 2 | 0 = OFF 1 = ON | | |
| 5 | 3 | 4 | Pump Status Zone 2 | 0 = OFF 1 = ON | | only active with MGZ/MCM Kit |
| **5** | **4** | **ZONE2 DEVICES** | | | | |
| 5 | 4 | 0 | Operation Mode Test | 0 = OFF<br>1 = ON<br>2 = Manual | | only active with MGZ/MCM Kit |
| 5 | 4 | 1 | Valve control | 0 = OFF<br>1 = Open<br>2 = Closed | | |
| 5 | 4 | 2 | Pump control | 0 = OFF - 1 = ON | | |
| **5** | **5** | **MULTIZONE** | | | | |
| 5 | 5 | 0 | Hydraulic Compensator T | from 0 to 120 (°C) | 0 | only active with MGZ/MCM Kit |
| 5 | 5 | 1 | Flow T Offset | from 0 to 40 (°C) | 5 | |
| **7** | **TEST & UTILITIES** | | | | | |
| **7** | **0** | **0** | Test Mode<br>rotate the enoder to select the different test mode | t -- = Max Heating power<br>t ¯ = Max DHW power (COMBI)<br>t _ = Minimum power | t -- | Enabled also by pressing for 10 seconds the Reset button. This function is deactivated automatically after 10 minutes, or when the Esc button is pressed. |
| **7** | **0** | **1** | Air purge Function | Press Menu/Ok button to active | | |
| **8** | **SERVICE PARAMETERS** | | | | | |
| **8** | **1** | **Service code** | | | 222 | Press +/- to select code 234 and press Menu/Ok |
| **8** | **2** | **BOILER** | | | | |
| **8** | **2** | **0** | Modulation Rate | from 0 to 165 MA | | |
| **8** | **2** | **1** | Fan Status | 0 = OFF 1 = ON | | |
| **8** | **2** | **2** | NOT ACTIVE | | | |
| **8** | **2** | **3** | Pump speed | 0= Low speed 1 = High speed | | |
| **8** | **2** | **4** | Diverter valve position (COMBI) | 0 = D.H.W. 1 =Central Heating | | |
| **8** | **2** | **5** | D.H.W. Flow Rate (l/min) (COMBI) | | | |
| **8** | **2** | **6** | Air Pressure Switch Status | 0 = Open 1 = Closed | | |

| menu | sub-menu | parameter | Description | range | factory setting | |
|---|---|---|---|---|---|---|
| **8** | **3** | **BOILER TEMPERTURE** | | | | |
| **8** | **3** | **0** | Set temperature Central Heating(°C) | | | |
| **8** | **3** | **1** | Flow Heating temperature (°C) | | | |
| **8** | **3** | **2** | Return Heating temperature (°C) | | | |
| **8** | **3** | **3** | Domestic Hot Water Temperature (°) (COMBI) | | | |
| **8** | **4** | **SOLAR & STORAGE** | | | | |
| 8 | 4 | 0 | Storage Temperature (°) | | | |
| 8 | 4 | 1 | Solar collector Temperature | | | **Displayed only with Solar Kit or external storage Kit** |
| 8 | 4 | 2 | D.H.W. Inlet Temperature | | | |
| 8 | 4 | 3 | NTC Storage Low | | | |
| 8 | 4 | 4 | Storage Set-point stratification | | | |
| 8 | 4 | 5 | Solar pump run time | | | |
| 8 | 4 | 6 | Collector overheat Temp Time | | | |
| **8** | **5** | **SERVICE** | | | | |
| **8** | **5** | **4** | P.C.B Hardware version | | | |
| **8** | **5** | **5** | P.C.B Software version | | | |
| **8** | **5** | **6** | P.C.B BUS Software version | | | |
| **8** | **6** | **STATISTICS** | | | | |
| **8** | **6** | **0** | Hours Burner On (Central Heating) (h/10) | | | |
| **8** | **6** | **1** | Hours Burner On (Domestic Hot Water) (h/10) | | | |
| **8** | **6** | **2** | Number of Flame Faults (nr/10) | | | |
| **8** | **6** | **3** | Number of ignition Cycles (nr/10) | | | |
| **8** | **6** | **4** | NOT PRESENT | | | |
| **8** | **6** | **5** | Heat request Duration | | | |
| **8** | **7** | **NOT ACTIVE** | | | | |
| **8** | **8** | **ERROR HISTORY** | | | | |
| **8** | **8** | **0** | Last 10 errors | from E00 to E99 | | |
| | | | This parameter makes it possible to see the last 10 errors shown by the boiler as well as the relevant day, month and year.<br>Access the parameter to bring up the sequence of errors from number E00 to number E99.<br>The following data is shown in a sequence for each single error:<br>E -0 - error number<br>1 08 - error code | | | |
| **8** | **8** | **1** | Reset Error List | Reset? Ok=Yes Esc=No | | |

**Important**
Maintenance is an essential part of the safe and efficient operation of the boiler and ensures its durability. It should be performed according to the instructions given in current legislation. Perform combustion analysis regularly in order to check the operating efficiency of the boiler and to make sure any polluting substances relased are within the boudaries set by current legislation.
Before beginning maintenance work:
- Disconnect the appliance from the electricity supply by turning the external bipolar switch to the "OFF" position;
- Close the gas valve and the central heating and domestic hot water system valve.

After the work has been completed the initial settings will be restored.

**General comments**
It is recommended that the following inspections be carried out on the boiler at least once a year:
1. Check the seals in the water part and, if necessary, replace the gaskets and restore the seal to perfect working order.
2. Check the seals in the gas part and, if necessary, replace the gaskets and restore the seal to perfect working order.
3. Visually check the overall condition of the boiler.
4. Visually check the combustion and, if necessary, disassemble and clean the burner.
5. Following the inspection detailed in point "3", disassemble and clean the combustion chamber, if necessary.
6. Following the inspection detailed in point "4", disassemble and clean the burner and injector, if necessary.
7. Cleaning the primary heat exchanger
8. Make sure the following heating safety devices are operating correctly:
   - temperature limit safety device.
9. Make sure that the following gas part safety devices are operating correctly:
   - absence of gas or flame safety device (ionisation).
10. Check the efficiency of the domestic hot water production process (test the flow rate and temperature).
11. Perform a general inspection of the boiler operation.
12. Remove oxide from the detection electrode using an emery cloth.

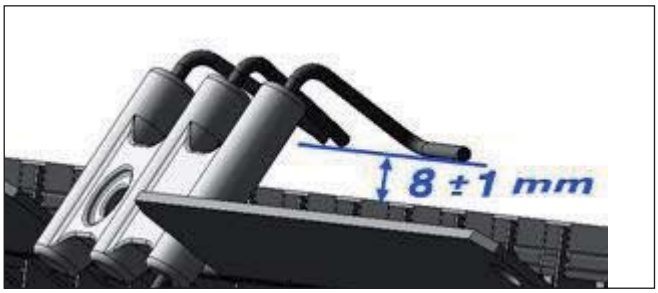


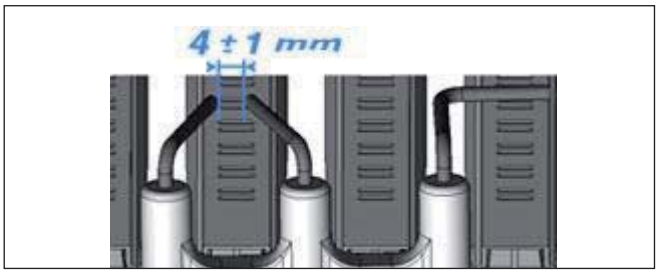


**Operational test**
After having carried out the maintenance operations, fill the heating circuit at a pressure of approximately 1.0 bar and release the air from the system.
Fill the domestic hot water system at the same time.
- Begin operating the boiler.
- If necessary, release the air from the heating system again.
- Check the settings and make sure all the command, adjustment and monitoring parts are working correctly.
- Check the seal and that the system for the expulsion of fumes/ suction of comburent air is operating correctly.

**Draining procedures**
The heating system must be drained using the following procedure:
- Switch off the boiler, make sure the external bipolar switch is in the OFF position and shut off the gas valve;
- Loosen the automatic air relief valve;
- Open the system discharge valve and collect the escaping water in a container;
- Empty the water from the lowest points of the system (where applicable).

If the system is to be left inactive in areas where the room temperature may fall below 0°C during winter, we recommend that anti-freeze liquid is added to the water in the heating system in order to avoid the need for repeated draining; when this liquid is used make sure it is compatible with the stainless steel used for the bodywork of the boiler.
We recommend the use of anti-freeze products which contain PROPYLENE GLYCOLS as these inhibit corrosion and that they are used in conjunction with the anti-scaling and anti-corrosion function, in the quantities suggested by the manufacturer, at the mimimum temperature.
Regularly check the pH level of the water/anti-freeze mix in the boiler circuit and replace it when the value measured is lower than the limit prescribed by the manufacturer.
**DO NOT MIX DIFFERENT TYPES OF ANTI-FREEZE.**
The manufacturer will not be held liable for any damage caused by the appliance or the system due to the use of inappropriate anti-freeze substances or additives.

**Draining the domestic hot water system and indirect cylinder**
Every time there is a danger of freezing, the domestic hot water system must be drained as follows:
- Shut off the water mains inlet valve;
- Open all the hot and cold water taps;
- Empty the water from the lowest points of the system (where applicable).

**WARNING**
Before handling, empty all components which may contain hot water, performing bleeding where necessary.
Descale the components in accordance with the instructions provided on the safety data leaflet supplied with the product used, make sure the room is well ventilated, wear protective clothing, avoid mixing different products, and protect the appliance and surrounding objects.
Seal all openings used to take a gas pressure reading or to make any gas adjustments.
Make sure that the nozzle is compatible with the supplied gas.
If a smell of burning is detected or smoke is seen leaking from the appliance, or there is a smell of gas, disconnect it from the electricity supply, shut off the gas valve, open the windows and call for technical assistance.

**Draining the System**

Draining the Heating System
The heating system must be drained as follows:
- Turn off the boiler;
- Attach a hose pipe and open the drain valve;
- Drain the system at the lowest points (where present). When the heating system is unused for an extended period of time, it is recommended that you add antifreeze with an ethylene glycol base to the water in the heating pipe work and radiators if the ambient temperature drops below 0°C during the winter.
This makes repeated draining of the entire system unnecessary.

Draining the Domestic Hot Water System
Whenever there is the danger of the temperature dropping below the freezing point, the domestic hot water system must be drained as follows:
- Turn off the general water valve for the household plumbing system;
- Turn on all the hot water taps;
- Empty the remaining water from the lowest points in the system (where present).

**Instructing The End User**

1. Hand over the copy of the End User Instructions supplied with the appliance, together with these instructions, and explain how to use the timeclock and room thermostat if fitted.

2. Show the End User how to switch the appliance off quickly, and indicate the position of the electric supply isolator.

3. Inform the End User of the location of all drains, isolating valves and air vents.

4. Explain how to turn the appliance off for both short and long periods and advise on the precautions necessary to prevent damage in the event that the appliance is inoperative when freezing conditions occur.

5. Finally advise the End User that, for continued safe and efficient operation, the appliance must be serviced by a competent person at least once a year.

**Completion**
For the Republic of Ireland it is necessary to complete a "Declaration of Conformity" to indicate compliance to I.S. 813. An example of this is given in the current edtion of I.S. 813. In addition it is necessary to complete the Benchmark Log Book.

**Operational Checks**

1. The flue system must be visibly checked for soundness.
2. On Central Heating allow the system to warm up and manipulate the Central Heating temperature control knob, check the burner modulates up and down between the high and low settings.
3. Range rate the thermal power for Central Heating, as detailed on page 30.
4. Run the Domestic Hot Water, manipulate the Domestic Hot Water temperature control knob to check the burner modulates up and down between the high and low settings (COMBI only).
5. Balance the Central Heating system until all return temperatures are correct and equal.
6. Switch ON/OFF button OFF, disconnect the pressure Gauge, retighten screw and relight boiler.
7. Re-examine Central Heating, Domestic Hot Water and Cold Water supplies for soundness.
8. Check the appearance of the gas flame to assess the adequacy of the combustion air supply.
9. If external controls have been disconnected, reconnect and test.
10. Refit boiler casing.
11. Complete the Benchmark Commisssioning Checklist on page 46 and any other necessary documentation.

It is recommended that the following inspections be carried out on the boiler at least once a year:

1 - Check the seals for the water connections; replace any faulty seals.
2 - Check the gas seals; replace any faulty gas seals.
3 - Visual check of the entire unit.
4 - Visual check of the combustion process or analysis of combustion by-products (see Section 3.4) and cleaning of the burner if needed.
5 - If necessary, dismantling and cleaning of the combustion chamber.
6 - If necessary, dismantling and cleaning of the burner jets.
7 - Visual check of the primary heat exchanger:
- check for overheating in the blade assembly;
- clean the exhaust fan if needed.
8 - Adjustment of the gas pressure, gas rate and soft-light, partial load and full load.
9 - Check of the heating safety systems:
- safety device for maximum temperature (overheat thermostat);
- safety device for maximum pressure (safety valve).
10- Check of the gas safety systems:
- safety device for lack of gas or flame ionisation (detection electrode).
11- Check of the electrical connection (ensure it complies with the instructions in the manual).
12- Check of Domestic Hot Water production efficiency (flow rate and temperature)
13- General check of the combustion by-products of the discharge/ventilation system.
14- Check of the general performance of the unit.

## General access

| | | | |
|---|---|---|---|
| **Tools** | | **Time** | 3 min |
| **1** | Unclip the cover to remove | Remove the two screws | Remove the front panel |
| **2** | Lower the electrical box | Remove the combustion chamber front panel by releasing the clips | |

## Electrical Unit

### Control Box access

| | | | |
|---|---|---|---|
| **Tools** | | **Time** | 4 min |
| **1** | Remove the front panel as above and pivot the electrical box | 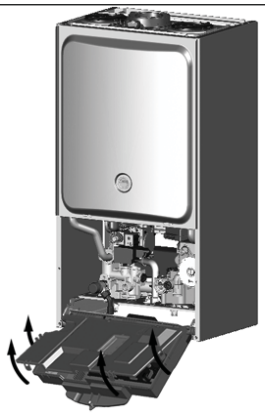 Unlock the four clamps to gain access to the control box | 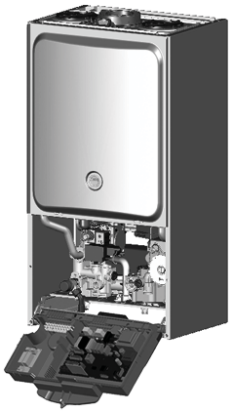 |

### Fuse

| | | | |
|---|---|---|---|
| **Tools** | | **Time** | 5 min |
| **1** | Open the control box as above | 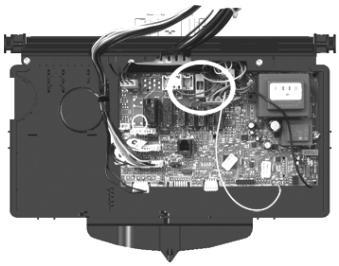 Remove the fuse | 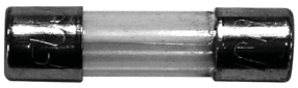 |

### Main PCB

| | | | | |
|---|---|---|---|---|
| **Tools** | | | **Time** | 7 min |
| **1** | 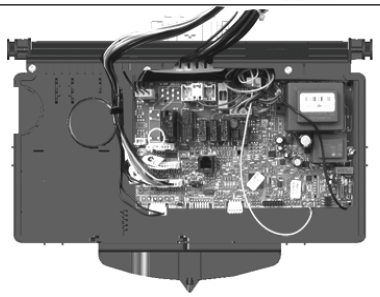 After opening the control box, disconnect the electrical plug connectors | 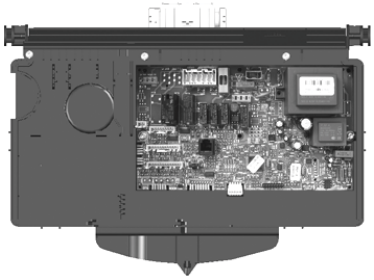 Unscrew the two screws and remove the PCB | | |

### Display PCB

| | | | | |
|---|---|---|---|---|
| **Tools** | 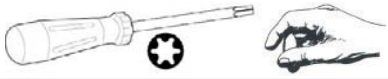 | | **Time** | 7 min |
| **1** | 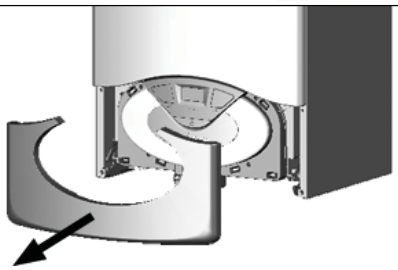 Unclip the cover to remove | 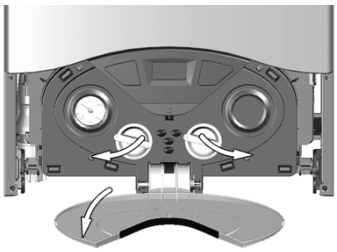 Lower the door and remove the two control knobs | Unscrew the four screws and pull the assembly towards you | |
| **2** | 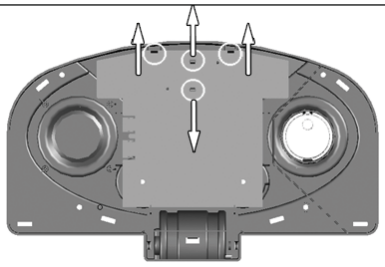 Disconnect the electrical plug connectors, unlock the four clamps, and remove the PCB | 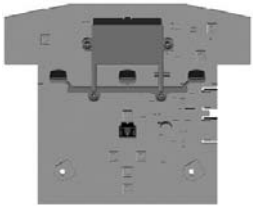 | | |

## Hydraulic Unit

### Right hand hydraulic block assembly

**CLAS 24/30 FF**

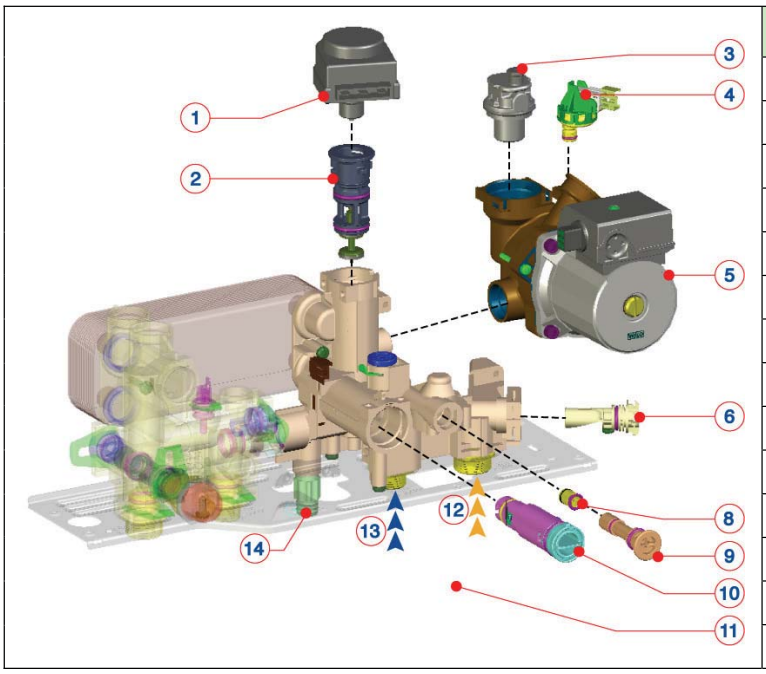


| LEGEND | |
|---|---|
| **1.** | Diverter valve motor |
| **2.** | Diverter valve |
| **3.** | Auto air vent |
| **4.** | Primary water pressure switch |
| **5.** | Pump |
| **6.** | Central heating filter |
| **7.** | Not applicable in UK |
| **8.** | Non-return valve |
| **9.** | Non-return valve assembly |
| **10.** | DHW flow switch assembly |
| **11.** | Central heating return |
| **12.** | Cold water inlet (DHW) |
| **13.** | Central heating drain valve |
| | |

**CLAS SYSTEM 21/28 FF**

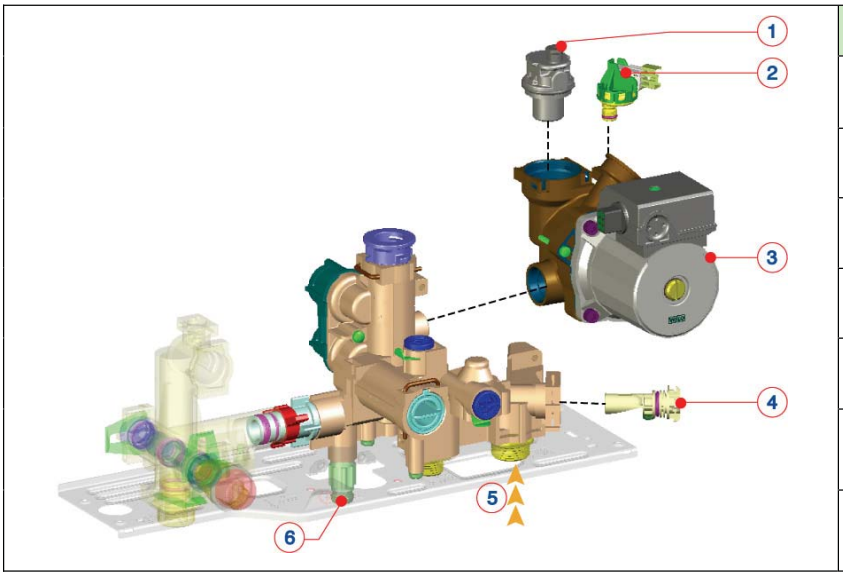


| LEGEND | |
|---|---|
| **1.** | Auto air vent |
| **2.** | Primary water pressure switch |
| **3.** | Pump |
| **4.** | Central heating filter |
| **5.** | Central heating return |
| **6.** | Central heating drain valve |
| | |

### 3 way valve

**CLAS 24/30 FF**

| | | | |
|---|---|---|---|
| **Tools** | | **Time** | 5 min |
| **1** | 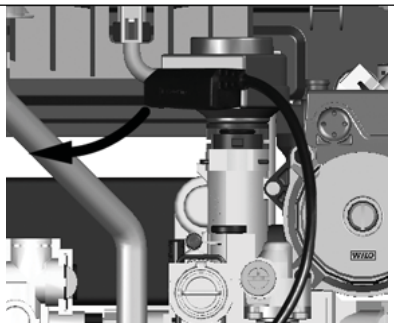 Unplug the diverter valve cable | 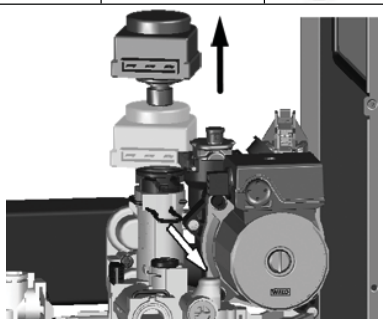 Remove the clip and lift the motor from the diverter valve body | |
| **2** | 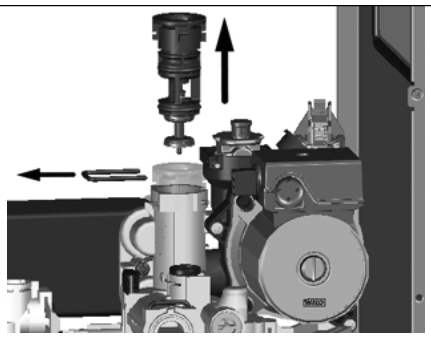 Drain the boiler (see 3.3). Remove the clip and lift the diverter valve from the assembly | 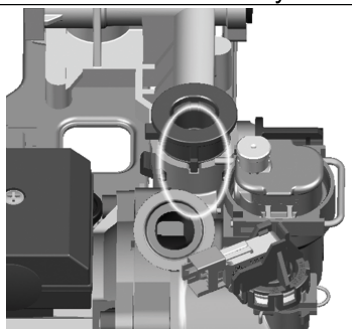 When reassembling, ensure the diverter valve is aligned correctly | |

### Draining

| | | | |
|---|---|---|---|
| **Tools** | | **Time** | 5 min |
| **1** | 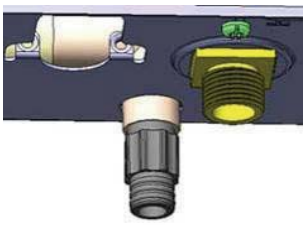 Turn the drain valve anti-clockwise to open and drain the water from the boiler. | | |

**Automatic air vent**

| | | | |
|---|---|---|---|
| **Tools** | | **Time** | 5 min |
| **1** | 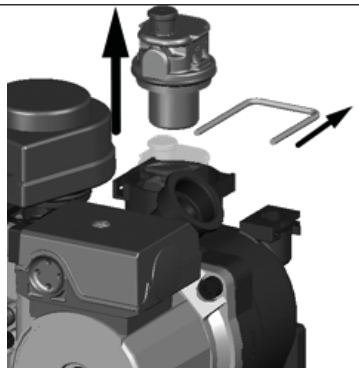 Drain boiler (see 3.3). Remove the clip and lift the AAV from the assembly | 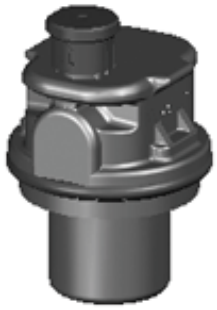 | |

**Primary water pressur sensor**

| | | | |
|---|---|---|---|
| **Tools** | | **Time** | 5 min |
| **1** | 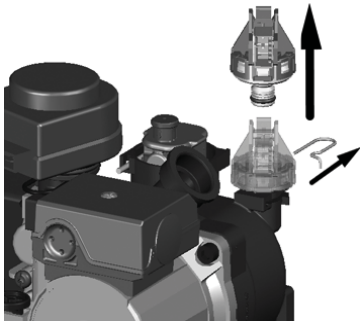 Drain boiler (see 3.3). Remove the fixing clip, unplug the electrical connector and lift the sensor from the assembly | | |

## Pump

| | | | | |
|---|---|---|---|---|
| **Tools** | | | **Time** | 10 min |
| **1** | 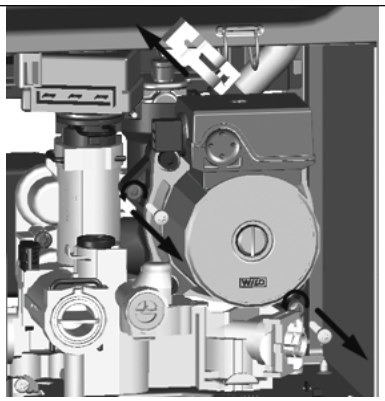 Drain boiler (see 3.3). Remove the clip and the two screws | Disconnect the pipe and then move the pump to the right disengage | 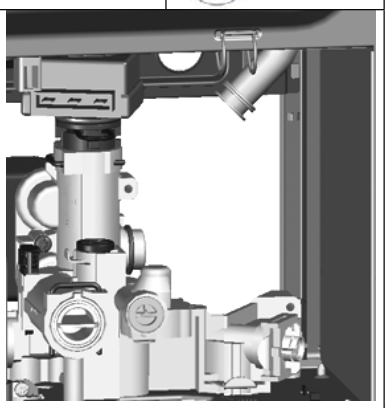 Remove the pump | |
| **2** | 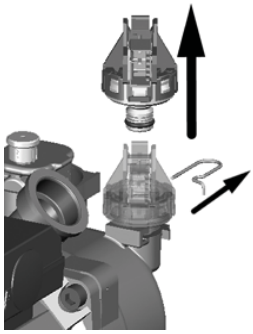 Remove the sensor (see 3.5) | 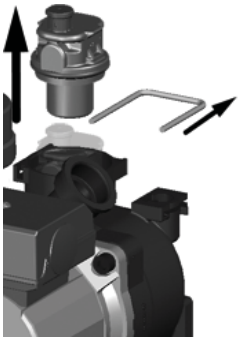 Remove the AAV (see 3.4) | | |

## CH Filter

| | | | | |
|---|---|---|---|---|
| **Tools** | | | **Time** | 5 min |
| **1** | 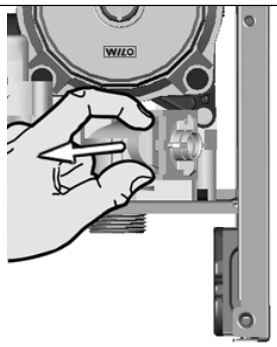 Remove the clip | 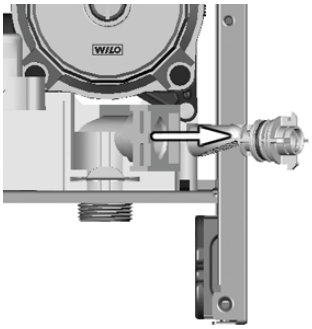 Remove the filter | | |

## DHW Flow switch assembly

**CLAS 24/30 FF**

| | | | |
|---|---|---|---|
| **Tools** | | **Time** | 5 min |
| **1** | 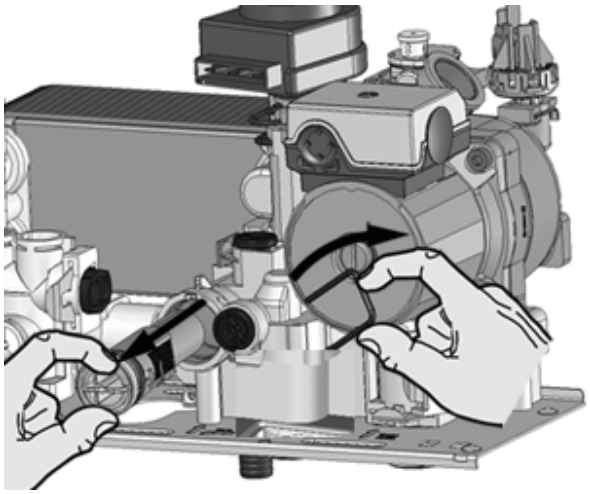 Drain boiler (see 3.3). Remove the clip and pull the flow switch assembly towards you | 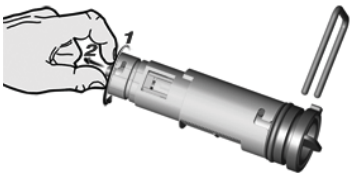  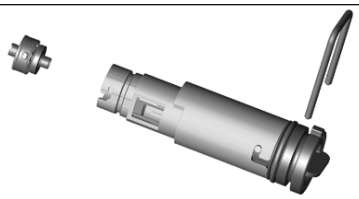 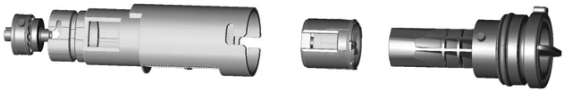 Twist the flow switch assembly to disengage | |

## Left hand hydraulic block assembly

**CLAS 24/30 FF**

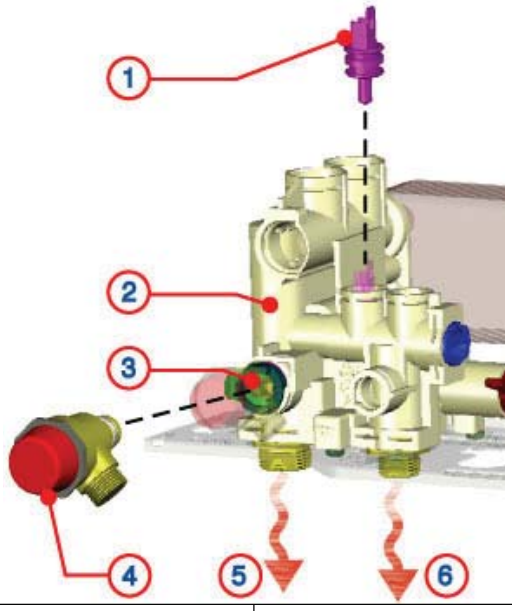


| | |
|---|---|
| **1.** DHW temperature sensor | **4.** Safety valve |
| **2.** Left hand hydraulic block | **5.** Central heating flow |
| **3.** By-pass assembly | **6.** Domestic hot water outlet |

**CLAS SYSTEM 21/28 FF**

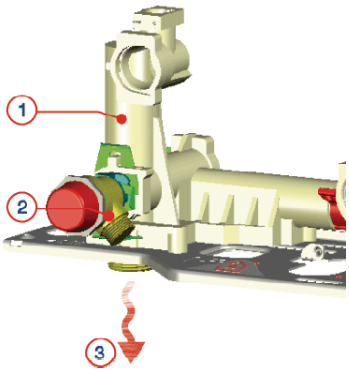


**1.** Left hand hydraulic block
**2.** Safety valve & By-pass assembly
**3.** Central heating flow

**D.H.W. Temperature sensor**

**CLAS 24/30 FF**

| | | | | |
|---|---|---|---|---|
| **Tools** | | | **Time** | 5 min |
| **1** | 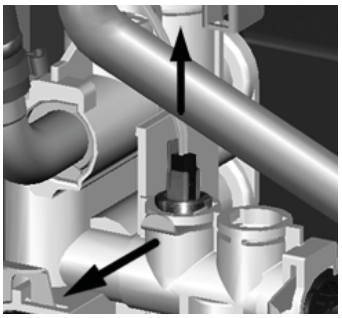 Isolate the cold water supply and drain the DHW circuit. Unplug the DHW sensor and remove the clip | 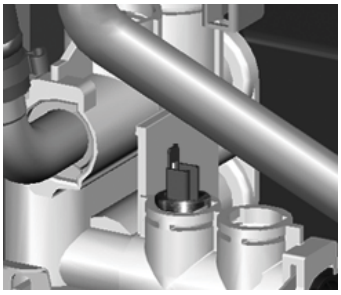 Sensor without wire and clip | 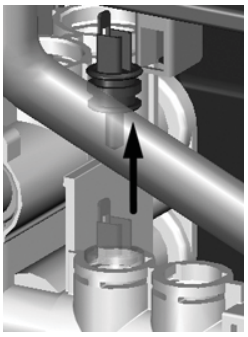 Lift the sensor from the assembly | |

**Safety valve**

| | | | | |
|---|---|---|---|---|
| **Tools** | | | **Time** | 5 min |
| **1** | 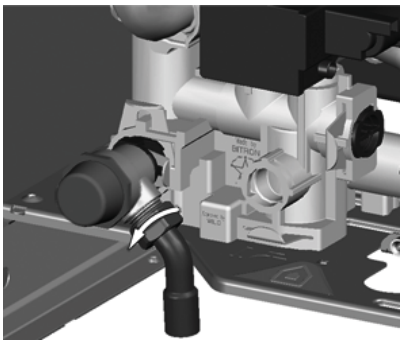 Drain boiler (see 3.3). Disconnect the discharge pipe | 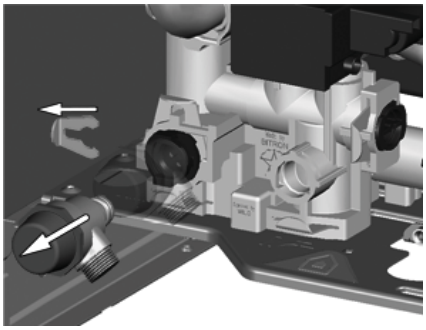 Remove the first clip on the left and pull the safety valve towards you | | |

## By-pass assembly

| | | | |
|---|---|---|---|
| **Tools** 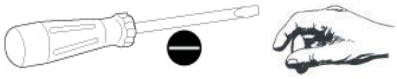 | | **Time** | 5 min |
| **1** | 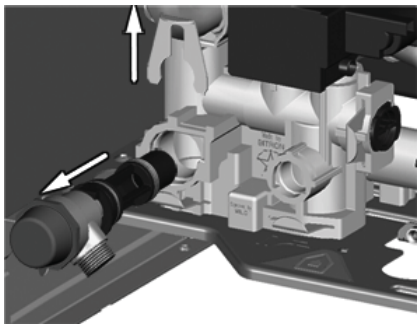 Drain boiler (see 3.3). Remove the second clip and pull the assembly towards you | 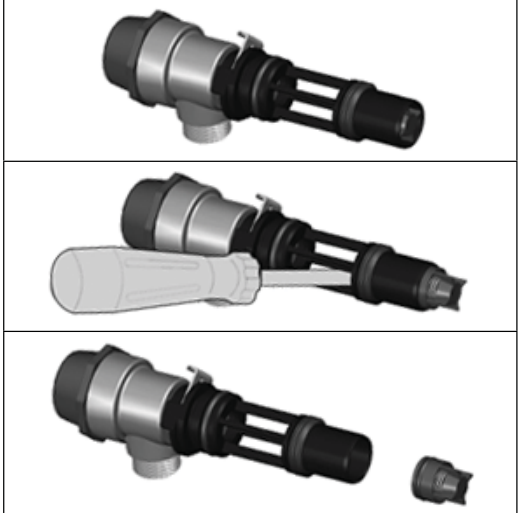 Push on the by-pass to disengage it | |

## Secondary heat exchanger

**CLAS 24/30 FF**

| | | | |
|---|---|---|---|
| **Tools** | | **Time** | 10 min |
| **1** | 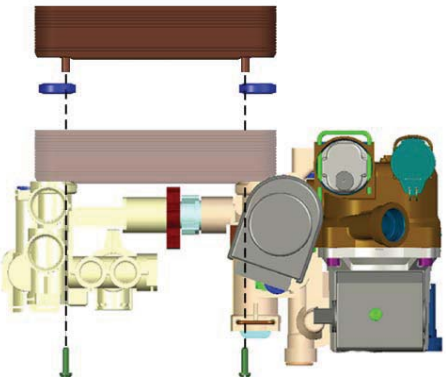 Drain primary and domestic hot water circuits. Remove the two screws and remove the heat exchanger | | 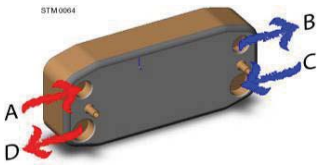  |

**Temperature sensors & overheat thermostat**

| | | | | |
|---|---|---|---|---|
| **Tools** | | | **Time** | 5 min |
| **1** | 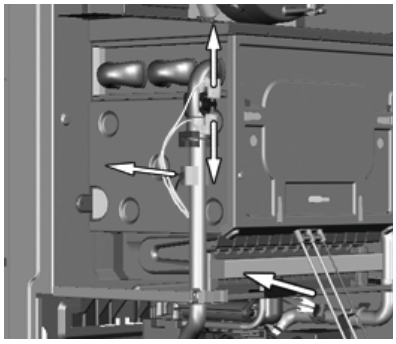 Unplug the electrical connectors | 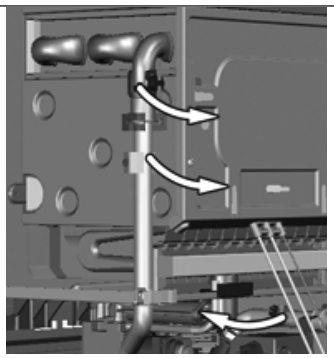 Remove the clips and the temperature sensor or overheat thermostat together | 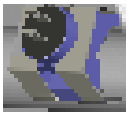 | |
| | **IMPORTANT!!!!** Do not use conducting paste for the contact sensors because it will alter the resistance value. | | | |

| TEMPERATURE (°C) | RESISTANCE (kOmh) |
|---|---|
| 0 | 27 |
| 10 | 17 |
| 20 | 12 |
| 25 | 10 |
| 30 | 8 |
| 40 | 5 |
| 50 | 4 |
| 60 | 3 |
| 70 | 2 |
| 80 | 1,5 |

### Main heat exchanger

| | | | |
|---|---|---|---|
| **Tools** | | | **Time** 15 min |
| **1** | 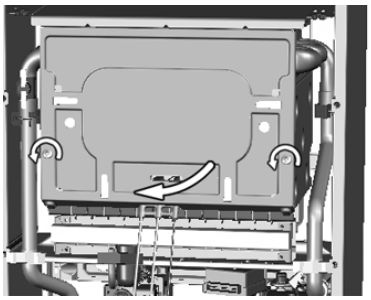 Drain boiler (see 3.3). Remove the two screws and pivot the combustion chamber panel | 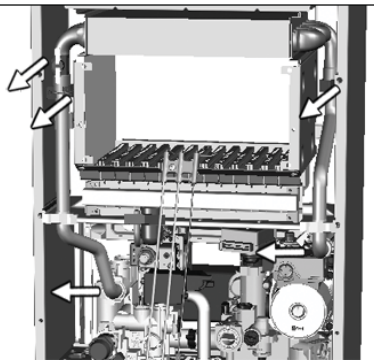 Remove the four pipes clips and the overheat sensor | 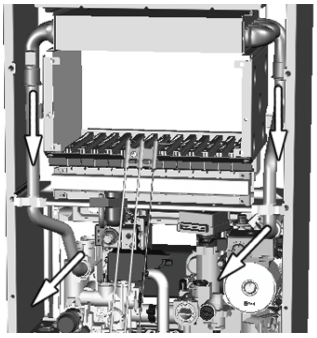 Remove the two pipes to free the heat exchanger |
| **2** | 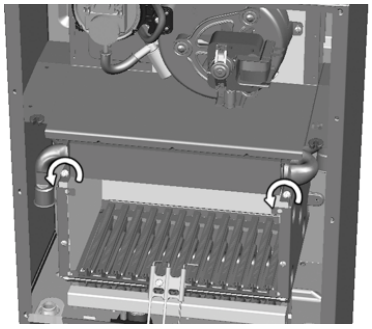 Remove the two screws at the top of the exchanger | 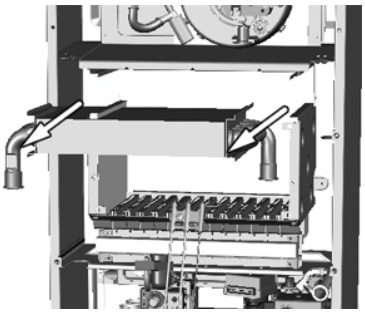 Pull the heat exchanger towards you | |

**Burner unit**

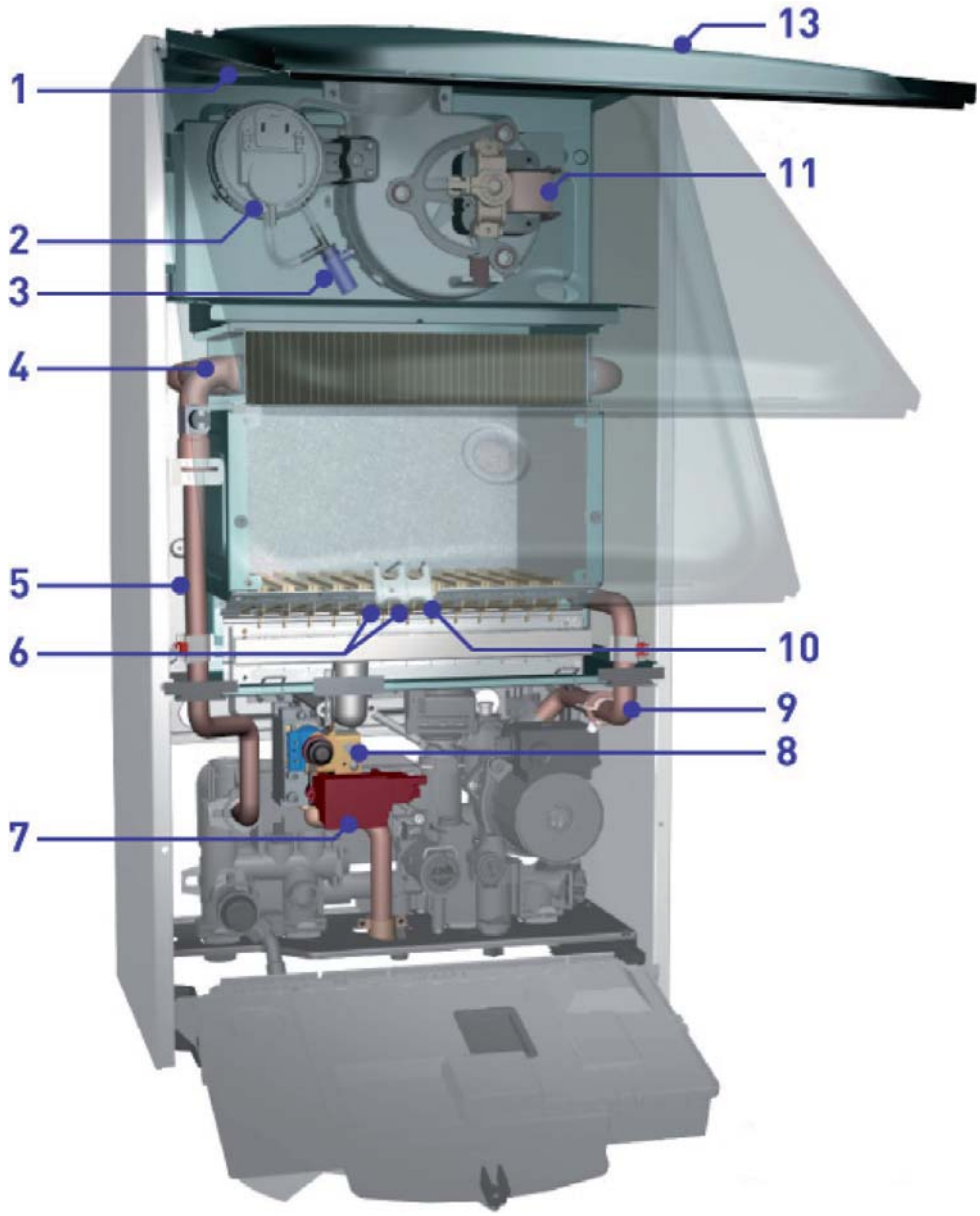


| CAPTION | |
|---|---|
| **1.** Air inlet for twin pipe systems | **8.** Gas valve |
| **2.** Air pressure switch | **9.** Primary exchanger flow pipe |
| **3.** Condensate collector | **10.** Flame detection electrode |
| **4.** Primary exchanger | **11.** Modulating fan |
| **5.** Primary exchanger flow pipe | **13.** Combustion chamber front panel |
| **6.** Ignition electrodes | |
| **7.** Igniter | |

### Spark generator

| | | | |
|---|---|---|---|
| **Tools** | | **Time** | 5 min |
| **1** | 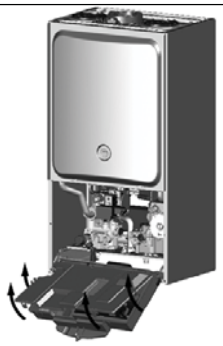 Disconnect electrically the boiler and open the control box | 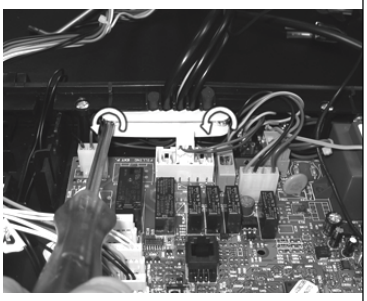 Free the wire by removing the two screws | 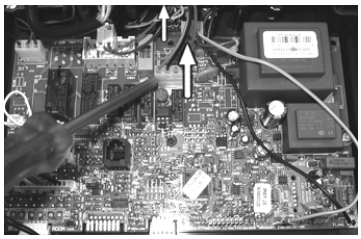 Disconnect the spark generator and the earth from the control box |
| **2** | 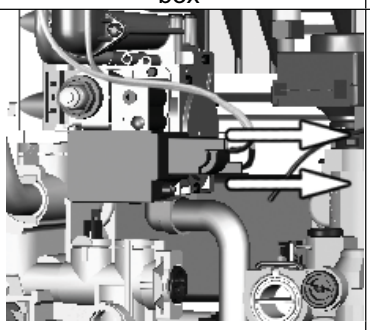 Unplug the ignition electrode from the spark generator | 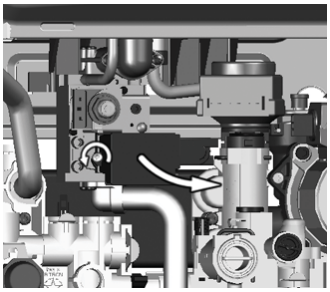 Pull the spark generator towards you after removing the screw | |

### Electrodes assembly

| | | | |
|---|---|---|---|
| **Tools** | | **Time** | 5 min |
| **1** | 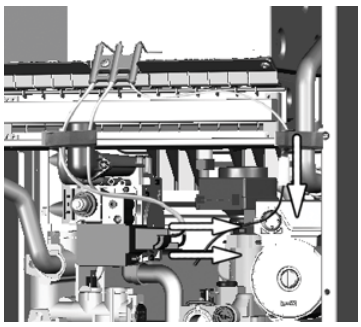 Remove the combustion chamber front panel and unplug the electrodes | 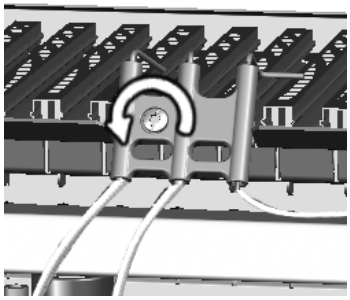 Remove the screw and pull the electrodes assembly towards you. | 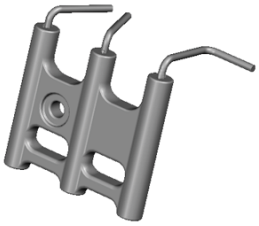 |

## Burner

| | | | |
|---|---|---|---|
| **Tools** | 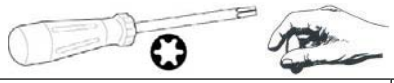 | | **Time** 15 min |
| **1** | 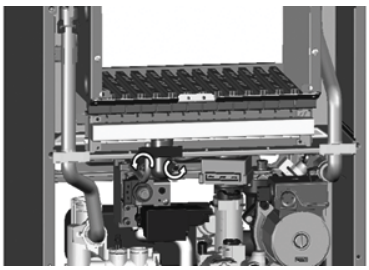 Isolate the gas supply. Remove the electrodes as above Remove the compensation flexible pipe and the two screws from the gas elbow | 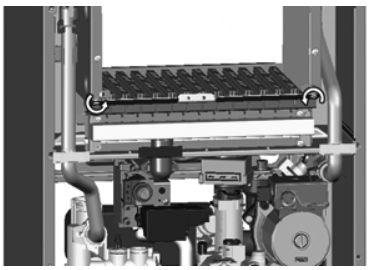 Remove the two screws from the burner | 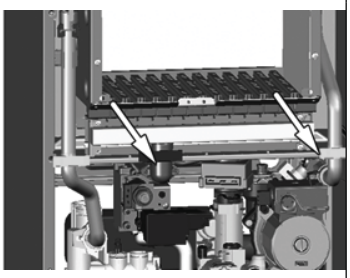 Pull the assembly towards you |
| **2** | 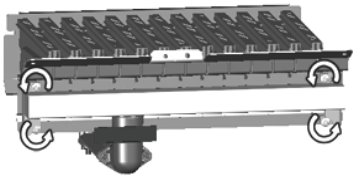 Remove the four screws to free the manifold | The burner | |

## Manifold

| | | | |
|---|---|---|---|
| **Tools** | 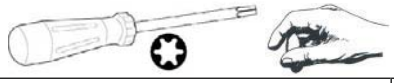 | | **Time** 10 min |
| **1** | 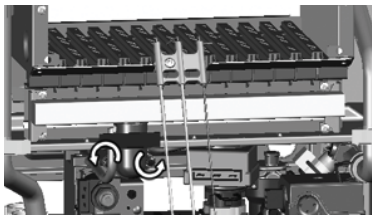 Isolate the gas supply. Disconnect the electrodes as above Remove the compensation flexible pipe and the two screws from the gas elbow | 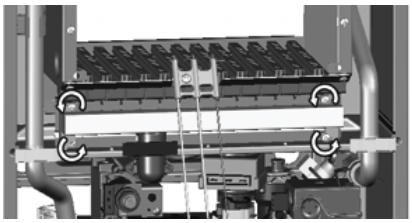 Remove the four screws and pull the assembly towards you | 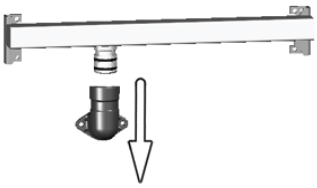 Pull down the gas elbow to free the manifold |

## Fan

| | | | |
|---|---|---|---|
| **Tools** | | **Time** | 5 min |
| **1** | Disconnect the fan wires | Remove the air pressure switch support and the condensate collector | |
| **2** | Remove the four screws and pull the fan towards you | | |

## Air pressure switch

| | | | |
|---|---|---|---|
| **Tools** | | **Time** | 4 min |
| **1** | Disconnect the air pressure switch wires | Disengage the air pressure switch by unlock the four clamps and pivot it towards you | |

**Gas valve**

| | | | | |
|---|---|---|---|---|
| **Tools** | | | **Time** | 15 min |
| **1** | 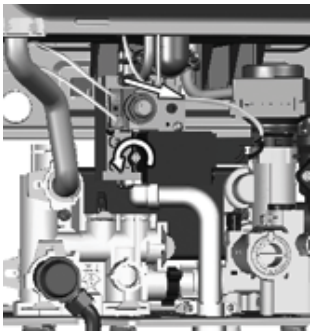 Remove the screw to free the spark generator and the compensation flexible pipe | 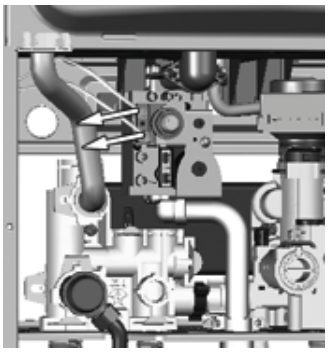 Remove the gas valve wires | 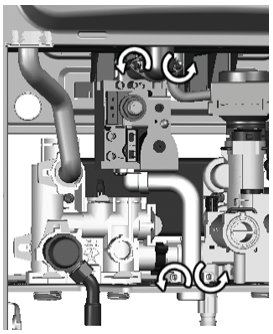 Remove the screws to free the gas valve assembly | |
| **2** | 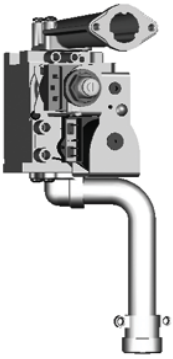 Gas valve assembly | 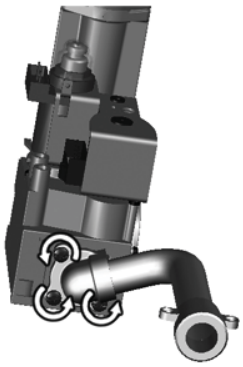 Remove the three screws to free the gas inlet pipe | 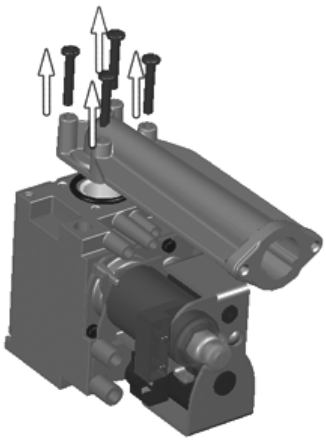 Remove the four screws to free the gas part between the gas valve and the manifold | |

### Annual Maintenance

| | |
|---|---|
| **Plate heat exchanger**<br><br>Maintenance Interval: As necessary<br>How: To measure specification of DHW performance. | 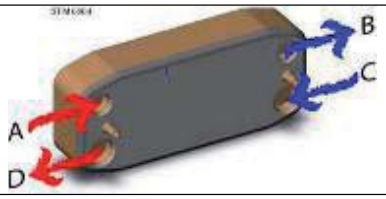 |
| **By-pass & Safety valve**<br><br>Maintenance Interval: Annually<br>How: Visual inspection / Clean as necessary | |
| **Central heating filter**<br><br>Maintenance Interval: Annually<br>How: Visual inspection / Clean as necessary | |
| **Flow switch operation**<br><br>Maintenance Interval: Annually<br><br>How: Visual inspection / Clean as necessary<br>/ Check flow rate | |
| **Expansion vessel**<br><br>Maintenance Interval: Annually<br>How: Check air pressure is at 1 bar (System drained) | |
| **Ignition & detection electrodes**<br><br>Maintenance Interval: Annually<br>How: Visual inspection / Clean as necessary / Distance from the burner / Ionisation current more than 1 µA | 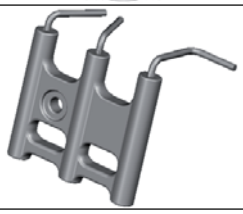 |
| **Burner**<br><br>Maintenance Interval: Annually<br>How: Visual inspection / Clean as necessary | |
| **Fan**<br><br>Maintenance Interval: Annually<br>How : Visual inspection / Clean as necessary | |
| **Primary Heat exchanger**<br><br>Maintenance Interval: Annually<br>How : Visual inspection / Clean as necessary | |
| **Pump**<br><br>Maintenance Interval: At the first ignition and annually<br><br>How: Check that the AAV is open /<br>Visual inspection / Clean as necessary | |

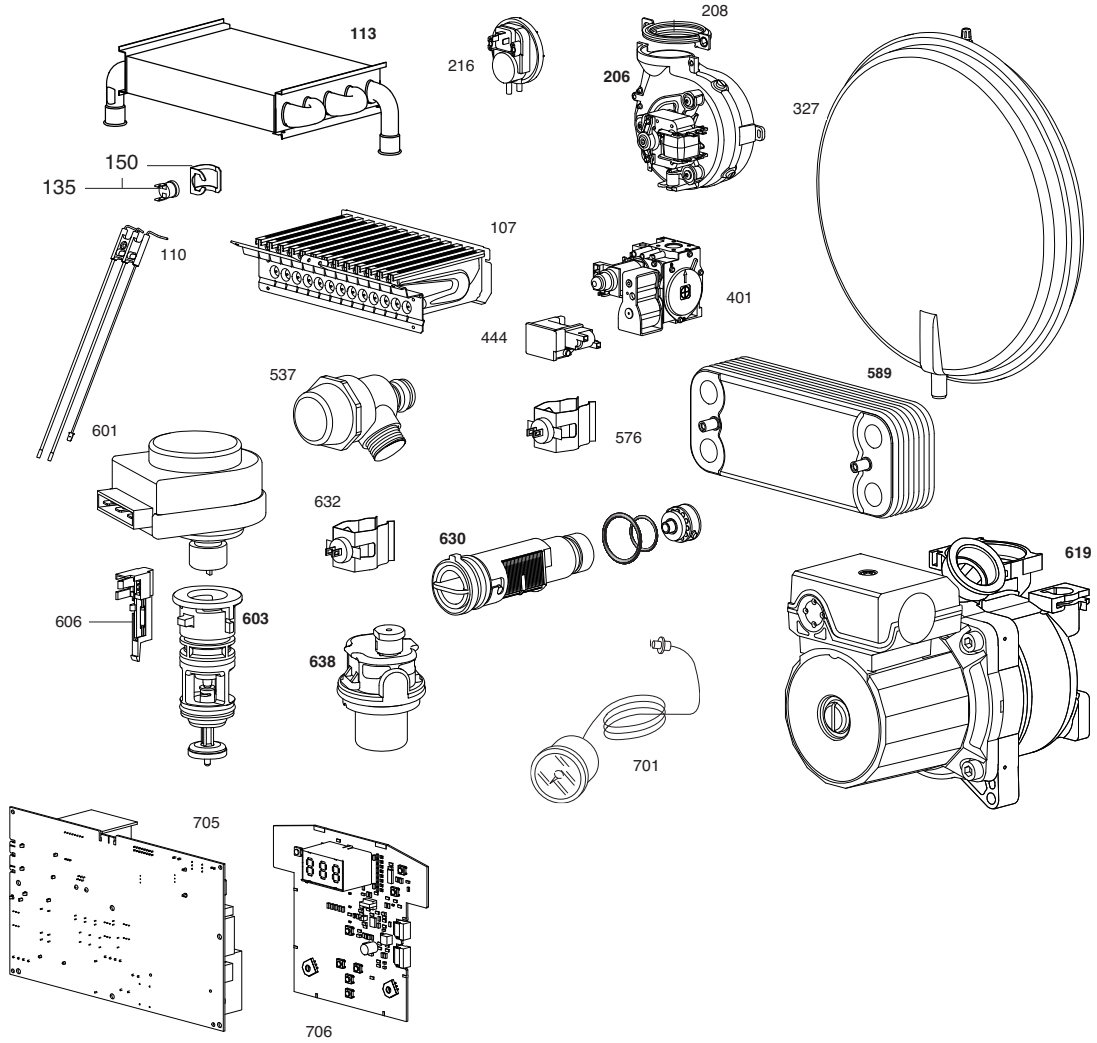


| Key N | Description | Manf. Pt. N | Type | CLAS FF 24 | CLAS FF 28 | CLAS SYSTEM FF 21 | CLAS SYSTEM FF 28 | CLAS SYSTEM FF 30 |
|---|---|---|---|---|---|---|---|---|
| 0107 | BURNER | 65104220 | | ● | ● | ● | ● | ● |
| 0110 | ELECTRODE (IGNITION/DETECTION) | 65104549 | | ● | ● | ● | ● | ● |
| 0113 | MAIN EXCHANGER | 65104246 | | ● | ● | ● | ● | ● |
| 0135 | THERMOSTAT | 65104500 | | ● | ● | ● | ● | ● |
| 0206 | FAN | 65104357 | | ● | | ● | | |
| | FAN | 65104452 | | | ● | | ● | ● |
| 0216 | AIR PRESSURE SWITCH | 65104671 | | ● | | ● | | |
| | AIR PRESSURE SWITCH | 65104672 | | | ● | | ● | ● |
| 0327 | EXPANSION VESSEL | 65104261 | | ● | ● | ● | ● | ● |
| 0537 | PRESSURE RELIEF VALVE | 61312668 | | ● | ● | ● | ● | ● |
| 0576 | TEMPERATURE PROBE + CLIP | 990686 | | ● | ● | ● | ● | ● |
| 0589 | SECONDARY EXCHANGER | 65104333 | | ● | ● | ● | ● | ● |
| 0601 | MOTOR - THREE-WAY VALVE | 61302483 | | ● | ● | | | |
| 0603 | 3-WAY SPRING KIT (D.H.W.) | 65104314 | | ● | ● | | | |
| 0606 | SENSOR (REED) | 65104323 | | ● | ● | | | |
| 0619 | PUMP | 65104227 | | ● | ● | ● | ● | ● |
| 0630 | 3-WAY SPRING KIT (D.H.W.) | 65104317 | | ● | ● | | | |
| 0632 | TEMPERATURE PROBE + CLIP | 990686 | | ● | ● | ● | ● | ● |
| 0638 | AUTO AIR VENT WITH O-RING | 65104703 | | ● | ● | ● | ● | ● |
| 0701 | PRESSURE GAUGE | 65104234 | | ● | ● | ● | ● | ● |
| 0705 | P.C.B. (MAIN) | 65105068 | | ● | ● | ● | ● | ● |
| 0706 | PRINTED CIRCUIT BOARD (DISPLAY) | 65104448 | | ● | ● | ● | ● | ● |

**BENCHMARK No.** | | | | | | |

benchmark™ COLLECTIVE MARK

# GAS BOILER COMMISSIONING CHECKLIST

**BOILER SERIAL No.** _____ **NOTIFICATION No.** _____

## CONTROLS

*To comply with the Building Regulation, each section must have a tick in one or other of the boxes*

| | | | | |
|---|---|---|---|---|
| TIME & TEMPERATURE CONTROL TO HEATING | ROOM T/STAT & PROGRAMMER/TIMER | ☐ | PROGRAMMABLE ROOMSTAT | ☐ |
| TIME & TEMPERATURE CONTROL TO HOT WATER | CYLINDER T/STAT & PROGRAMMER/TIMER | ☐ | COMBI BOILER | ☐ |
| HEATING ZONE VALVES | FITTED | ☐ | NOT REQUIRED | ☐ |
| HOT WATER ZONE VALVES | FITTED | ☐ | NOT REQUIRED | ☐ |
| THERMOSTATIC RADIATOR VALVES | FITTED | ☐ | | |
| AUTOMATIC BYPASS TO SYSTEM | FITTED | ☐ | NOT REQUIRED | ☐ |

## FOR ALL BOILERS CONFIRM THE FOLLOWING

THE SYSTEM HAS BEEN FLUSHED IN ACCORDANCE WITH THE BOILER MANUFACTURER'S INSTRUCTIONS? ☐

THE SYSTEM CLEANER USED

THE INHIBITOR USED

## FOR THE CENTRAL HEATING MODE, MEASURE & RECORD

| | | | | |
|---|---|---|---|---|
| GAS RATE | ☐ | $m^3$/hr | ☐ | $ft^3$/hr |
| BURNER OPERATING PRESSURE ( IF APPLICABLE) | ☐ | N/A | ☐ | mbar |
| CENTRAL HEATING FLOW TEMPERATURE | | | ☐ | °C |
| CENTRAL HEATING RETURN TEMPERATURE | | | ☐ | °C |

## FOR COMBINATION BOILERS ONLY

HAS A WATER SCALE REDUCER BEEN FITTED? YES ☐ NO ☐

WHAT TYPE OF SCALE REDUCER HAS BEEN FITTED

## FOR THE DOMESTIC HOT WATER MODE, MEASURE & RECORD

| | | | | |
|---|---|---|---|---|
| GAS RATE | ☐ | $m^3$/hr | ☐ | $ft^3$/hr |
| MAXIMUM BURNER OPERATING PRESSURE (IF APPLICABLE) | ☐ | N/A | ☐ | mbar |
| COLD WATER INLET TEMPERATURE | | | ☐ | °C |
| HOT WATER OUTLET TEMPERATURE | | | ☐ | °C |
| WATER FLOW RATE | | | ☐ | lts/min |

## FOR CONDENSING BOILERS ONLY CONFIRM THE FOLLOWING

THE CONDENSATE DRAIN HAS BEEN INSTALLED IN ACCORDANCE WITH THE MANUFACTURER'S INSTRUCTIONS? YES ☐

## FOR ALL INSTALLATIONS CONFIRM THE FOLLOWING

THE HEATING AND HOT WATER SYSTEM COMPLIES WITH CURRENT BUILDING REGULATIONS ☐

THE APPLIANCE AND ASSOCIATED EQUIPMENT HAS BEEN INSTALLED AND COMMISSIONED IN ACCORDANCE WITH THE MANUFACTURER'S INSTRUCTIONS ☐

IF REQUIRED BY THE MANUFACTURER, HAVE YOU RECORDED A CO/CO2 RATIO READING? N/A ☐ YES ☐ $CO/CO_2$ RATIO

THE OPERATION OF THE APPLIANCE AND SYSTEM CONTROLS HAVE BEEN DEMONSTRATED TO THE CUSTOMER ☐

THE MANUFACTURER'S LITERATURE HAS BEEN LEFT WITH THE CUSTOMER ☐

**COMMISSIONING ENG'S NAME** PRINT _____ CORGI ID No. _____

SIGN _____ DATE _____

# SERVICE INTERVAL RECORD

It is recommended that your heating system is serviced regularly
and that you complete the appropriate Service Interval Record Below.

**Service Provider.** Before completing the appropriate Service Interval Record below, please ensure you have carried out the service as described in the boiler manufacturer's instructions. Always use the manufacturer's specified spare part when replacing all controls

**SERVICE 1** DATE
ENGINEER NAME
COMPANY NAME
TEL No.
CORGI ID CARD SERIAL No.
COMMENTS

SIGNATURE

**SERVICE 2** DATE
ENGINEER NAME
COMPANY NAME
TEL No.
CORGI ID CARD SERIAL No.
COMMENTS

SIGNATURE

**SERVICE 3** DATE
ENGINEER NAME
COMPANY NAME
TEL No.
CORGI ID CARD SERIAL No.
COMMENTS

SIGNATURE

**SERVICE 4** DATE
ENGINEER NAME
COMPANY NAME
TEL No.
CORGI ID CARD SERIAL No.
COMMENTS

SIGNATURE

**SERVICE 5** DATE
ENGINEER NAME
COMPANY NAME
TEL No.
CORGI ID CARD SERIAL No.
COMMENTS

SIGNATURE

**SERVICE 6** DATE
ENGINEER NAME
COMPANY NAME
TEL No.
CORGI ID CARD SERIAL No.
COMMENTS

SIGNATURE

**SERVICE 7** DATE
ENGINEER NAME
COMPANY NAME
TEL No.
CORGI ID CARD SERIAL No.
COMMENTS

SIGNATURE

**SERVICE 8** DATE
ENGINEER NAME
COMPANY NAME
TEL No.
CORGI ID CARD SERIAL No.
COMMENTS

SIGNATURE

**SERVICE 9** DATE
ENGINEER NAME
COMPANY NAME
TEL No.
CORGI ID CARD SERIAL No.
COMMENTS

SIGNATURE

**SERVICE 10** DATE
ENGINEER NAME
COMPANY NAME
TEL No.
CORGI ID CARD SERIAL No.
COMMENTS

SIGNATURE

Commercial subsidiaries:

MTS (GB) Limited
MTS Building
Hughenden Avenue
High Wycombe
Bucks HP13 5FT
Telephone: (01494) 755600
Fax: (01494) 459775
Internet: www.mtsgroup.com/uk
E-mail: info@uk.mtsgroup.com
Technical Advice: 0870 241 8180
Customer Service: 0870 600 9888

MTS Heating Limited
Damastown Industrial Park
Damastown Avenue
Mulhuddart
Dublin 15
Telephone: (01) 810 3723
Fax: (01) 810 3727
Internet: www.mtsgroup.com/ie
E-mail: info@ie.mtsgroup.com
Technical Advice: (01) 437 0121
Customer Service: (01) 437 0121

420010108501 - 09/2007

ARISTON

User's manual

# CLAS24/30
# CLAS SYSTEM 21/28

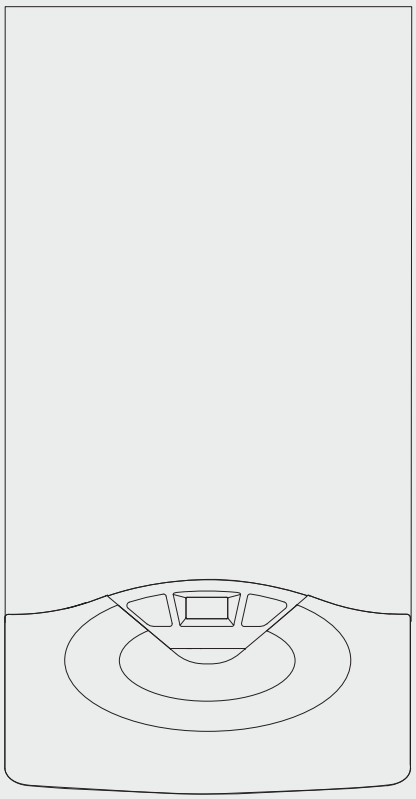

WALL HUNG GAS BOILER
TYPE C

**CLAS 24 FF**
**CLAS 30 FF**
**CLAS SYSTEM 21 FF**
**CLAS SYSTEM 28 FF**

G.C.N: 47-116-59 (24KW)
G.C.N: 47-116-61 (30KW)

G.C.N: 41-116-27 (21KW)
G.C.N: 41-116-28 (28KW)

Dear Customer,

Thank you for choosing an ARISTON boiler.
We guarantee that your boiler is a reliable and technically sound product.
This manual provides detailed instructions and recommendations for proper installation, use and maintenance.
Remember to keep this manual in a safe place for future reference i.e. by the gas meter.
Your local MTS Servicing Centre is at your complete disposal for all requirements.

**The installation and first ignition of the boiler must be performed by qualified personnel in compliance with current national regulations regarding installation, and in conformity with any requirements established by local authorities and public health organisations.**
**After the boiler has been installed, the installer must ensure that the end user receives the declaration of conformity and the operating manual, and should provide all necessary information as to how the boiler and the safety devices should be handled.**

This appliance is designed to produce hot water for domestic use.
It should be connected to a heating system and a distribution network for domestic hot water, both of which must be compatible with its performance and power levels.
The use of the appliance for purposes other than those specified is strictly forbidden. The manufacturer cannot be held responsible for any damage caused by improper, incorrect and unreasonable use of the appliance or by the failure to comply with the instructions given in this manual.
Installation, maintenance and all other interventions must be carried out in full conformity with the governing legal regulations and the instructions provided by the manufacturer. Incorrect installation can harm persons, animals and possessions; the manufacturing company shall not be held responsible for any damage caused as a result.
In the event of any maintenance or other structural work in the immediate vicinity of the ducts or flue gas exhaust devices and their accessories, switch the appliance off by switching the external bipolar switch to the "OFF" position and shutting off the gas valve.
When the work has been completed, ask a qualified technician to check the efficiency of the ducting and the devices.
If the boiler should be out of use for a prolonged period, it is recommended that the electrical power supply be disconnected and that the external gas cock be closed. If low temperatures are expected, the boiler and system pipe work should be drained in order to prevent frost damage.
Turn the boiler off and turn the external switch "OFF" to clean the exterior parts of the appliance.
Do not allow children or inexperienced persons to use the appliance without supervision.

**CE labelling**
The CE mark guarantees that the appliance conforms to the following directives:
- **90/396/CEE**
  relating to gas appliances
- **89/336/CEE**
  relating to electromagnetic compatibility
- **92/42/CEE**
  relating to energy efficiency
- **73/23/CEE**
  relating to electrical safety

**GUARANTEE**

The appliance is guaranteed for 24 months from the date of purchase.

Aristons only obligation under the guarantee will be to repair or replace the faulty appliacnce at Aristons discretion. This will be carried out where the fault arises from within defects in the appliance, caused either by material or workmanship of the manufacturer.

This guarantee does not protect malfunction or damage arising from incorrect installation, commissioning or maintenance procedures as laid out in the installation and servicing manual, inefficient flue system, poor or incorrect electricicty, wrong gas supply or pressure, tampering by inexperienced persons and any other cause not directly due to manufacture.

MTS (GB) Limited cannot accept responsibility for any cost arising from repair or maintenance carried out by any third party.

Service under the guarantee does not affect the expiry date of the guarantee. The guarantee on parts and appliances which are exchanged ends when the guarantee on the original appliance expires.

This guarantee does not affect your statutory rights.

You must have your boiler serviced at the end of the first year to validate your guarantee for the second year.

**Safety regulations**
Key to symbols:

⚠ Failure to comply with this warning implies the risk of personal injury, in some circumstances even fatal

△ Failure to comply with this warning implies the risk of damage, in some circumstances even serious, to property, plants or animals.

**Do not perform operations which involve opening the appliance.**
⚠ Electrocution from live components.
Personal injury caused by burns due to overheated components, or wounds caused by sharp edges or protrusions.

**Do not perform operations which involve removing the appliance from its installation space .**
⚠△ Electrocution from live components.
Flooding caused by water leaking from disconnected piping.
Explosions, fires or intoxication caused by gas leaking from disconnected piping.

**Do not damage the power supply cable.**
△ Electrocution from live uninsulated wires.

**Do not leave anything on top of the appliance.**
⚠ Personal injury caused by an object falling off the appliance as a result of vibrations.
Damage to the appliance or items underneath it caused by the object falling off as a result of vibrations.

**Do not climb onto the appliance.**
⚠△ Personal injury caused by the appliance falling.
Damage to the appliance or any objects underneath it caused by the appliance falling away from its installation space.

**Do not climb onto chairs, stools, ladders or unstable supports to clean the appliance.**
⚠ Personal injury caused by falling from a height or cuts (step ladders shutting accidentally).

**Do not attempt to clean the appliance without first switching it off and turning the external switch to the OFF position.**
△ Electrocution from live components.

**Do not use insecticides, solvents or aggressive detergents to clean the appliance.**
△ Damage to plastic and painted parts.

**Do not use the appliance for any use other than normal domestic use.**
△ Damage to the appliance caused by operation overload.
Damage caused to objects treated inappropriately.

**Do not allow children or inexperienced individuals to operate the appliance.**
⚠ Damage to the appliance caused by improper use.**If you detect a smell of burning or smoke coming from the appliance, disconnect it from the electricity supply, turn off the main gas valve, open all windows and call for assistance.**
⚠ Personal injury caused by burns, smoke inhalation, intoxication.

**If there is a strong smell of gas, turn off the main gas valve, open all windows and call for assistance.**
⚠ Explosions, fires or intoxication.

**Auto Function**
The AUTO function serves to optimise boiler performance, while maintaining an optimum radiator temperature and maximum user comfort. It ensures the building stays at the ideal temperature, whilst saving energy.
The principle is that the water temperature at the boiler outlet is automatically adjusted, depending on the interior ambient temperature.

## Control Panel

**CLAS 24 FF**
**CLAS 30 FF**

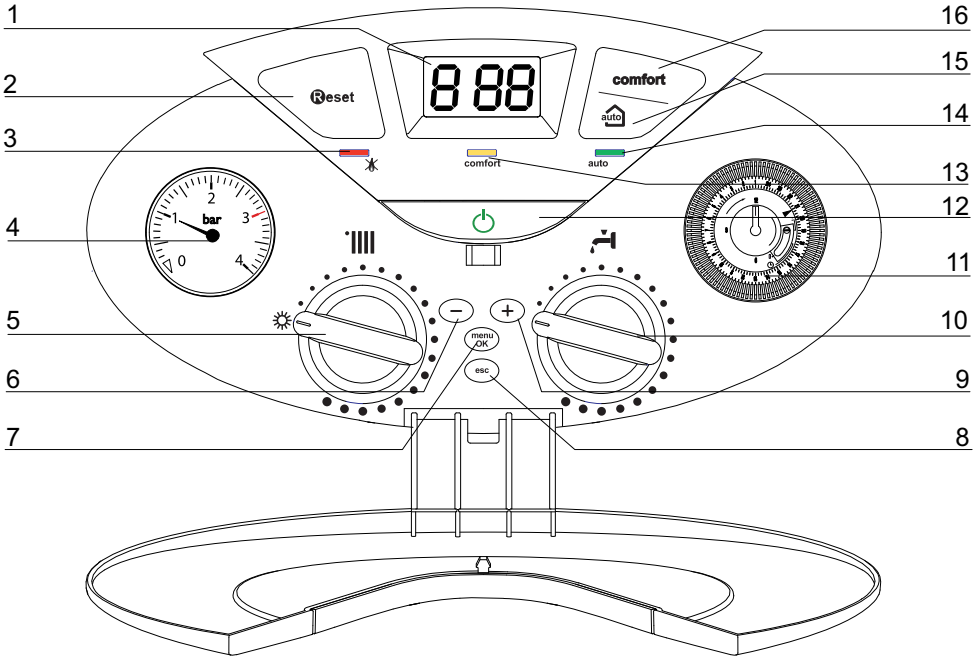


Legend:
1. Display
2. RESET button
3. Red LED (illuminated = boiler lockout)
4. Heating System Pressure Gauge
5. Selector knob for Summer/Winter Central Heating Temperature Adjustment Knob
6. Programming "-" key
7. Menu/Ok button
8. Esc button
9. Programming "+" key
10. Domestic Hot Water adjustment knob (COMBI models)
11. Time clock (optional)
12. ON/OFF Switch
13. "COMFORT" Function L.E.D (COMBI models)
    Heating only L.E.D (SYSTEM models)
14. Green led (auto function activate)
15. Auto button (to active Thermoregulation)
16. COMFORT button (COMBI models)
    Heating only button (SYSTEM models)

**CLAS SYSTEM 21 FF**
**CLAS SYSTEM 28 FF**

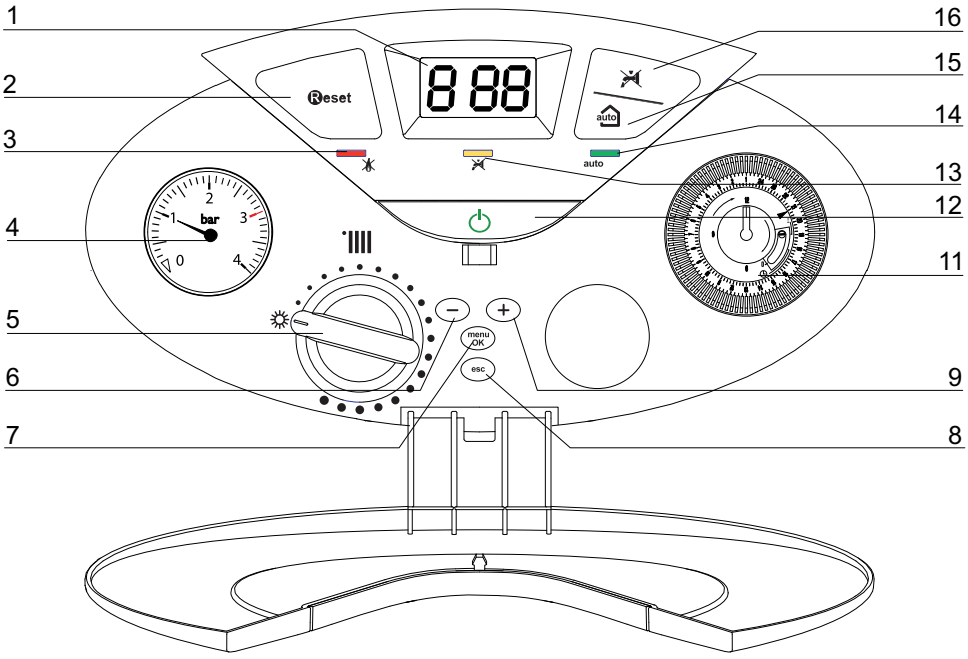

**Initial operating procedures**

If the boiler is installed inside the apartment, make sure that all provisions relating to the air inlet and room ventilation (in compliance with current legislation) are respected.
Check the water pressure on the display regularly and make sure that the figure is between 0.6 and1.5 bar when the system is cold. If the pressure is just under the minimum value the display will request a filling procedure.
Re-establish the correct pressure by filling loop.
If the pressure drops very frequently, there may be a water leak at some point in the system. If this is the case a plumber should be contacted.

**Ignition procedure**

Press the ON/OFF button on the control panel to switch on the boiler. The display shows:

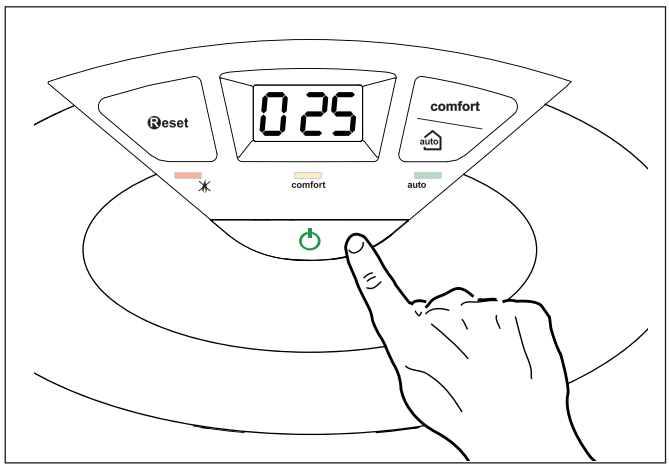


The first figure indicates the operating mode:

0 - Stand -by,
C - Central heating request
c - Heating post-circulation
d - Domestic hot water request
H - Hot water post-circulation
F - Circulation pump anti-freeze protection enabled
- burner anti-freeze protection enabled

The second and third figures indicate:

- the flow temperature when no heating requests have been made
- the flow temperature in central heating mode
- the temperature of the hot water in domestic hot water mode
- the flow temperature in anti-freeze mode.

**Winter or summer function**

Turn the heating button **6** to select the desired operating mode (winter or summer). In winter mode every heating is shown on the display by the heating temperature.
Summer mode is set by putting the button **6** in "O" position (heating off).

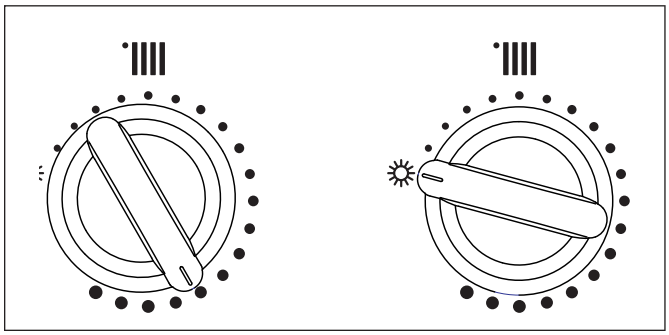

**Adjusting the heating**

It is possible to set the temperature of the heating water by adjusting the knob **6**. By placing the indicator somewhere between min. and max. a temperature may be obtained which varies from about 20°C to about 45°C (low temperature) and about 35°C to about 82°C (high temperature).

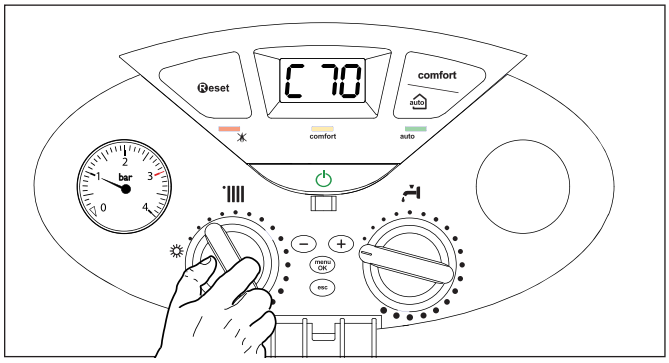


**Domestic hot water temperature adjustement (COMBI)**

It is possible to set the temperature of the domestic hot water by adjusting the knob **11** a temperature may be obtained which varies from about 36°C to about 60°C.
The value set previously will flash on the display.

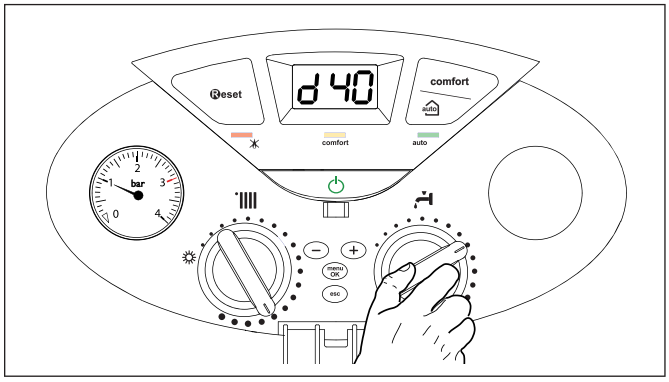

**COMFORT function (COMBI)**

To activate the comfort mode it is necessary to press the comfort button **17**, this will be indicatd by a yellow light **4**. The comfort mode has priority over any other heating request.

There are two settings for the comfort mode (they can be adjusted in the parameters menu):

1. As soon as DHW is drawn, the secondary heat exchanger is kept warm for 30 mins.
2. As soon as DHW is drawn, the secondary heat exchanger is kept warm permanently.

This function may be enabled by pressing the COMFORT button.

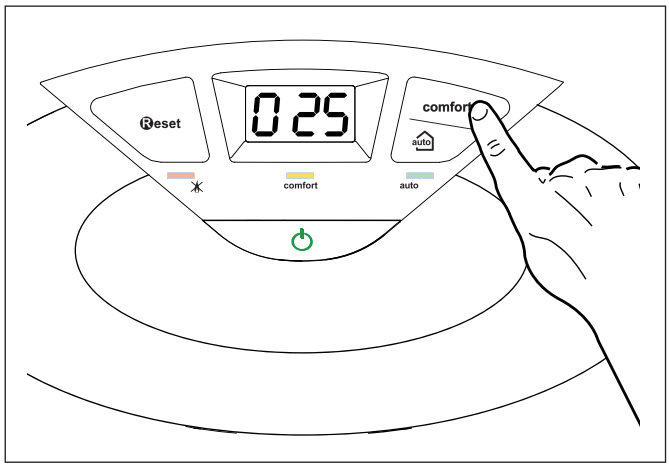


**Switching off the heating**

To switch off the heating mode turn the button **6** in the position"O". The boiler switches in sanitary mode only and indicating the set temperature.

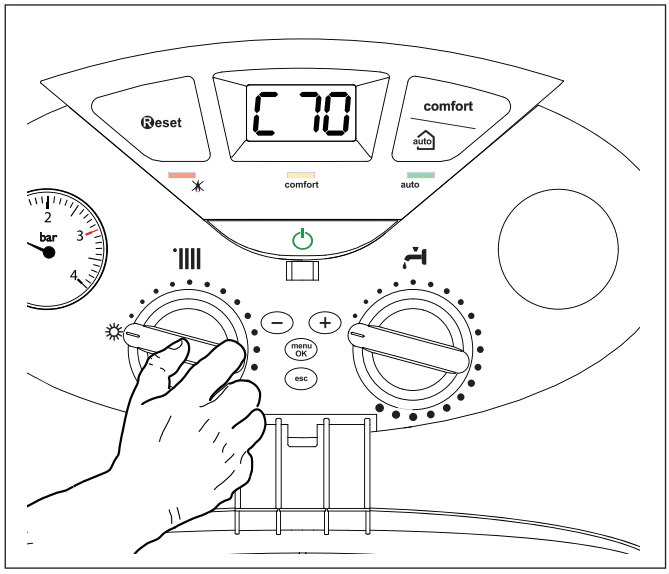


**Stand by**

To switch off the boiler press the ON/OFF **13**.

Switch off the boiler completely by switching the external electrical switch to the OFF position; the display will switch off.

Close the gas tap.

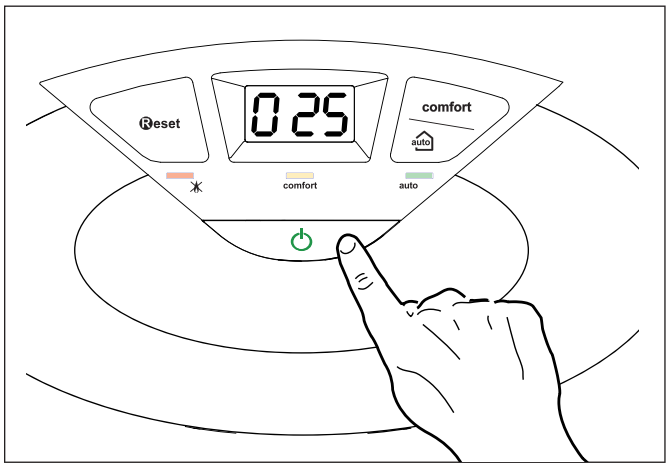

**Appliance shut-off conditions**

The boiler is protected from malfunctions by means of internal checks performed by the electronic P.C.B., which stops the boiler from operating if necessary. In the event of the boiler being shut off in this manner, a code appears on the control panel display which refers to the type of shut-off and the reason behind it.
Two types of shut-off may occur:

**Safety shut-off**

This type of error is "volatile", which means that the boiler starts up again automatically as soon as the problem which caused the shut-off is removed. The display will flash "Err" and the error code.

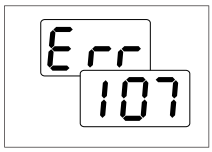


In fact, as soon as the cause of the shut-off disappears, the boiler starts up again and continues to operate normally.
While the boiler is shut off for safety reasons, it is possible to attempt to restore normal operation by switching the appliance off and on again using the ON/OFF button on the control panel.
If the boiler still indicates a safety shut-off, switch it off. Make sure the external electric switch is in the OFF position, close the gas tap and contact a qualified technician.

**Safety shut-off due to insufficient water pressure**

If the water pressure inside the heating circuit is insufficient, the boiler will perform a safety shut-off. (See table).
To re-pressurise the boiler, it will be necessary to connect the silver flexible hose supplied to the two isolating points underneath the boiler, once the hose is connected, open up both of the black quarter turn handles, once the pressure reads 1.5 bar on the display, close both handles and disconnect the hose .
If the pressure drops very frequently, there may be a water leak at some point in the system. If this is the case please contact your installer and ask them to check it.

**Operation shutdown**

This type of error is "non volatile", which means that it is not removed automatically. The display will flash ERR and the error code and the red led lights up "3".
In this case the boiler does not restart automatically, but it may be reset by pressing the Reset button. If the problem manifests itself again after several attempts to reset the appliance, contact a qualified technician.

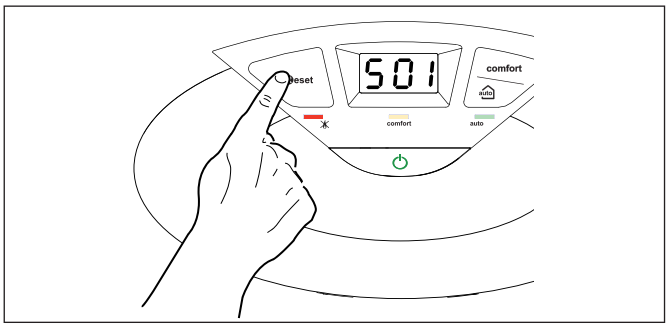


**IMPORTANT**

**IF THIS SHUTDOWN OCCURS FREQUENTLY, CONTACT AN AUTHORISED SERVICE CENTRE FOR ASSISTANCE. FOR SAFETY REASONS, THE BOILER WILL ALLOW A MAXIMUM OF 5 RESET OPERATIONS TO TAKE PLACE IN 15 MINUTES (INDIVIDUAL PRESSES OF THE Reset BUTTON).**

**Operation shutdown error table**

| Display | Description |
|---|---|
| 1 01 | Overheating |
| 5 01 | No flame detection |
| 1 03 | Insufficient circulation |
| 1 04 | |
| 1 05 | |
| 1 06 | |
| 1 07 | |
| 3 05 | P.C.B error |
| 3 06 | P.C.B error |
| 3 07 | P.C.B error |

**Anti-frost Device.**

The anti-frost function acts on the central heating flow temperature probe, independently from other settings, when the electrical supply is turned on.
If the primary circuit temperature falls below 8°C the pump will run for 2 minutes.
After the two minutes of circulation (fixed) the boiler will check the following:

a) if the central heating flow temperature is > 8°C, the pump stops;
b) if the central heating flow temperature is between 4 and 8°C, the pump will run for another two minutes;
c) if the central heating flow temperature is < 4°C, the burner will fire (heating position) at minimum power until the temperature reaches 33°C, the burner will go off and the pump will continue to run for two minutes.

The anti-frost device activates only when (with the boiler operating correctly):

- the system pressure is correct,
- the boiler is electrically powered,
- there is a supply of gas.

## Auto button - Temperature adjustment activation

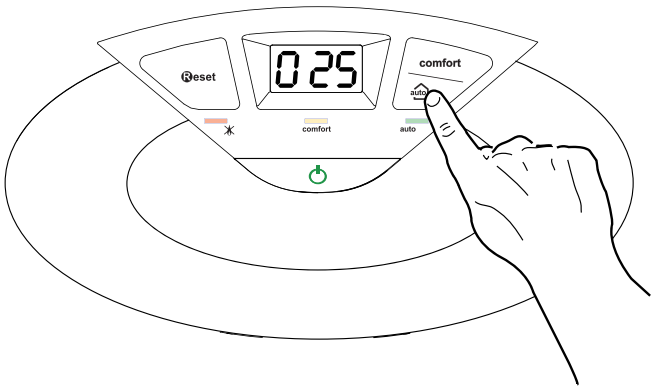


The AUTO function enables boiler operation to be adapted to environmental conditions and to the type of system it is installed on.
Comfortable temperature is reached inside the room in the quickest way possible, without wasting money, energy or efficiency, while substantially reducing the amount of wear experienced by the components.

> Your installer will advise you on the devices connectable to the boiler and will program it according to the system.

In normal boilers the water temperature inside the heating elements is usually set to a high value (70-80°C), thereby ensuring effective heating during the few really cold winter days. It then becomes excessive on less cold days (of which there are many) more typical of the autumn and winter seasons. This leads to excessive room heating after the thermostat has been switched off, resulting in energy waste and uncomfortable conditions inside the room.
The AUTO function "takes control" of the boiler and selects the best operating regime based on environmental conditions, external devices connected to the boiler and the performance required. It constantly decides at which power level to operate based on the environmental conditions and the room temperature required.

**Change of gas type**
Our boilers are designed to function either with Natural Gas (methane) or L.P.G. gas. If you need to change from one gas to the other, one of our Authorised Service Centres must be contacted to convert the appliance.

**Maintenance**
Schedule an annual maintenance check-up for the boiler with a competent person.
Correct maintenance always results in savings in the cost of running the system.
Failure to arrange an annual service for the appliance will invalidate the second year of the manufacturers guarantee.

Commercial subsidiaries:

MTS (GB) Limited
MTS Building
Hughenden Avenue
High Wycombe
Bucks HP13 5FT
Telephone: (01494) 755600
Fax: (01494) 459775
Internet: www.mtsgroup.com/uk
E-mail: info@uk.mtsgroup.com
Technical Advice: 0870 241 8180
Customer Service: 0870 600 9888

MTS Heating Limited
Damastown Industrial Park
Damastown Avenue
Mulhuddart
Dublin 15
Telephone: (01) 810 3723
Fax: (01) 810 3727
Internet: www.mtsgroup.com/ie
E-mail: info@ie.mtsgroup.com
Technical Advice: (01) 437 0121
Customer Service: (01) 437 0121

420010108401 - 09/2007