ARISTON

COMBI A SERIES

Combi A 24 MFFi
Combi A 30 MFFi

Installation and Servicing Instructions Type C Boilers

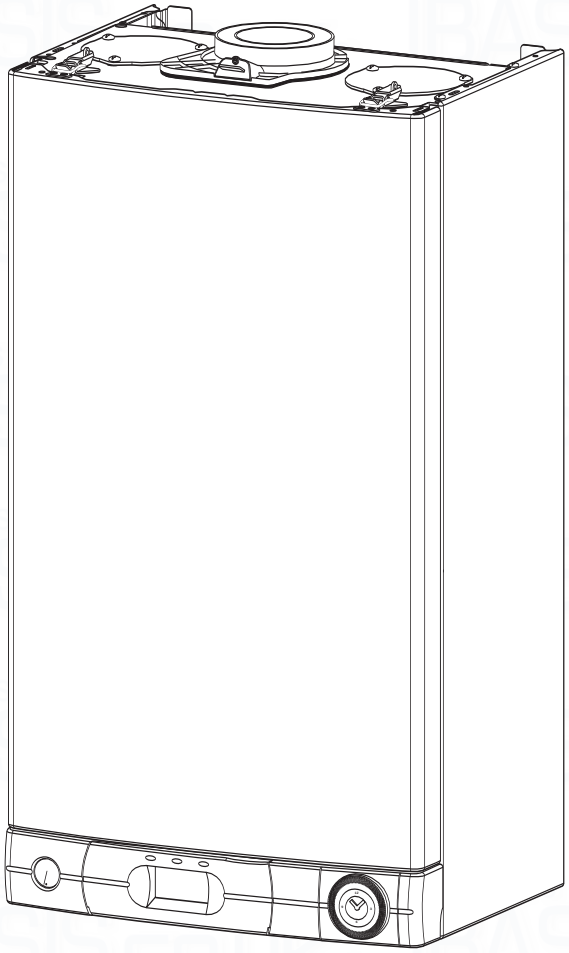

G.C.N: 47-116-44 (24 kW)
G.C.N: 47-116-45 (30 kW)

LEAVE THESE INSTRUCTIONS WITH THE END-USER

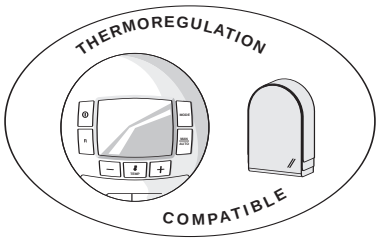

Country of destination **GB** **IE**

benchmark™ COLLECTIVE MARK

The code of practice for the installation, commissioning & servicing of central heating systems

CE

These instructions are suitable for the Combi A boilers :

Do not forget the Log Book!

MTS supports Benchmark, the heating industry code to ensure the correct installation, commissioning and servicing of domestic central heating systems.

To The Householder

Make sure you have a completed Log Book for your boiler. This provides a record of the commissioning of your boiler.

It contains important information about your particular installation that may be required by service engineers. The Log Book will also provide contact details for the installer should you need guidance in the use of this appliance or if there are any problems.

As with your car, your boiler will work more reliably and efficiently if regularly serviced. We recommend an annual service check. The service history of the appliance will be recorded on the Log Book.

In the unlikely event of any problems with your boiler or system you should first contact your installer. If your installer cannot resolve the problem he should telephone our national service helpline.

A charge may be made if MTS Service is called out to resolve a non-product related fault.

Your statutory rights are not affected.

To The Installer

As part of the commissioning of this appliance it is vital that the Log Book is completed and given to the Householder. Please ensure that your customer is aware of the importance of keeping the Log Book safe as a record of the installation and the appliance service history.

Please ensure that your customer is aware of the correct operation of the system, boiler and controls.

MTS recommend the use of protective clothing, when installing and working on the appliance i.e. gloves.

CUSTOMER CARE

MTS, as a leading manufacturer of domestic and commercial water heating appliances is committed to providing high quality products and a high quality after sales service.

Advice on installation or servicing can also be obtained by contacting the MTS Technical and Customer Service Departments at High Wycombe.

TECHNICAL DEPARTMENT		CUSTOMER SERVICE DEPARTMENT	
Tel:	0870 241 8180	Tel:	0870 600 9888
Fax:	01494 459775	Fax:	01494 459775

GUARANTEE

The manufacturer's guarantee is for 2 years from the date of purchase. The guarantee is invalidated if the appliance is not installed in accordance with the recommendations made herein or in a manner not approved by the manufacturer. To assist us in providing you with an efficient after sales service, please return the guarantee registration card enclosed with the boiler without delay.

CAUTION

In the United Kingdom, installation, start-up, adjustments and maintenance, must be performed by a competent person only, in accordance with the current Gas Safety (Installation & Use) Regulations and the instructions provided.

In the Republic of Ireland, the installation and initial start up of the appliance must be carried out by a Competent Person in accordance with the current edition of I.S.813 "Domestic Gas Installations", the current Buidling Regulations, reference should also be made to the current ETCI rules for electrical installation.

All CORGI registered installers carry a CORGI ID card, and have a registration number. Both should be recorded in your boiler Log Book. You can check your installer is CORGI registered by calling CORGI direct on:- (01256) 372300.

Improper installation may cause damage or injury to individuals, animals and personal property for which the manufacturer will not be held liable. To ensure efficient and safe operation it is recommended that the boiler is serviced annually by a competent person.

If it is known that a fault exists on the appliance, it must not be used until the fault has been corrected by a competent person.

This instruction booklet is especially designed for appliances installed in the UK and the Republic of Ireland

Contents

CUSTOMER CARE

Page

Guarantee 2
Statutory Requirements 2
Contents 3
INTRODUCTION 4

USER INSTRUCTIONS 5

1 CONTROL PANEL 5
2 HOW TO USE 6
3 MAINTENANCE 7
4 GUARANTEE 7
5 PRACTICAL INFORMATION 7
6 SETTING THE TIME CLOCK 8
6.1 SETTING THE MECHANICAL CLOCK 8
6.2 SETTING THE DIGITAL CLOCK 9

INSTALLERS' INSTRUCTIONS 11

7 DESCRIPTION 11
8 DIMENSIONS 12
9 HYDRAULIC DATA 12
10 INSTALLATION REQUIREMENTS 13
11 INSTALLING THE BOILER 16
12 CONNECTING THE FLUE 18
12.1 FITTING THE COAXIAL FLUE (ø 60 / 100 Horizontal) 19
12.2 FITTING THE 5" FLUE (ø 80 / 125 Horizontal / Vertical) 19
12.3 FITTING VERTICAL FLUE (ø 60 / 100) 21
12.4 FITTING THE TWIN FLUE (ø 80 / 80) 22
13 ELECTRICAL CONNECTIONS 25
13.1 FITTING DIGITAL TIME CLOCK 27
14 COMMISSIONING AND TESTING 28
14.1 INITIAL PREPARATION 28
14.2 INITIAL START-UP 28
14.3 ADJUSTING THE CO2 29
14.4 GAS CONVERSION 29
14.5 ADJUSTING THE MAXIMUM HEATING POWER 29
14.6 FITTING THE EXTERNAL SENSOR 29
14.7 EXTERNAL SENSOR SET-UP 30
14.8 COMPLETION 30
14.9 OPERATIONAL CHECKS 30
14.10 INSTRUCTING THE END USER 31
15 FITTING THE CASING 32
16 SEQUENCE OF OPERATION 33
16.1 CENTRAL HEATING MODE 33
16.2 DOMESTIC HOT WATER MODE 34
17 ADJUSTMENTS AND SETTINGS 35

SERVICING INSTRUCTIONS

18 REPLACEMENT OF PARTS 42
18.1 To Gain General Access 42
18.1.1 Removing the front panel 42
18.1.2 Lowering the control panel 42
18.2 Access to the Combustion Chamber 43
18.2.1 Removing the combustion chamber front panel 43
18.2.2 Removing the burner 44
18.2.3 Removing the detection electrode 44
18.2.4 Removing the ignition electrode 44
18.2.5 Removing the fan 45
18.2.6 Removing the gas valve 45
18.2.7 Removing the heat exchanger 46
18.2.8 Removing the spark generator 46
18.3 ACCESS TO THE WATER CIRCUIT 47
18.3.1 Drain down 47
18.3.2 Removing the 3 way valve 47
18.3.3 Removing the float of the flow switch 47
18.3.4 Removing the secondary heat exchanger 48
18.3.5 Removing the pump 48
18.3.6 Removing the pressure relief valve 49
18.3.7 Removing the domestic expansion vessel 49
18.3.8 Removing the overheat thermostat 49
18.3.9 Removing the temperature sensors (NTC's) 49
18.3.10 Removing the pressure gauge 50
18.3.11 Removing the DHW flow switch 50
18.3.12 Removing & cleaning the condensate trap 50
18.4 ACCESS TO THE CONTROL SYSTEM 50
18.4.1 Removing the PCB's 50
18.4.2 Removing the fuses 51
18.5 CONNECTING THE EXTERNAL SENSOR 51
19 INCORRECT FUNCTION 52
20 MAINTENANCE INSTRUCTIONS 53
20.1 GENERAL REMARKS 53
20.2 CLEANING THE PRIMARY EXCHANGER 53
20.3 OPERATIONAL TEST 53
21 SHORT SPARES LIST 54
22 TECHNICAL DATA 55
23 BENCHMARK COMMISSIONING CHECKLIST 57
24 SERVICE INTERVAL RECORD 58
25 NOTES 59

INTRODUCTION

The **COMBI A** is a fully automatic, wall mounted, low water content condensing combination boiler. It is a room sealed, fan assisted, balanced flued appliance providing central heating and mains pressure domestic hot water on demand. It has electronic ignition and is suitable for all modern electrical control systems. The boiler is designed for sealed systems only and a circulating pump, expansion vessel together with a pressure gauge and safety valve are included within the boiler.

The **COMBI A** range of boilers are domestic gas boilers and intended for domestic use only.

1. Control panel

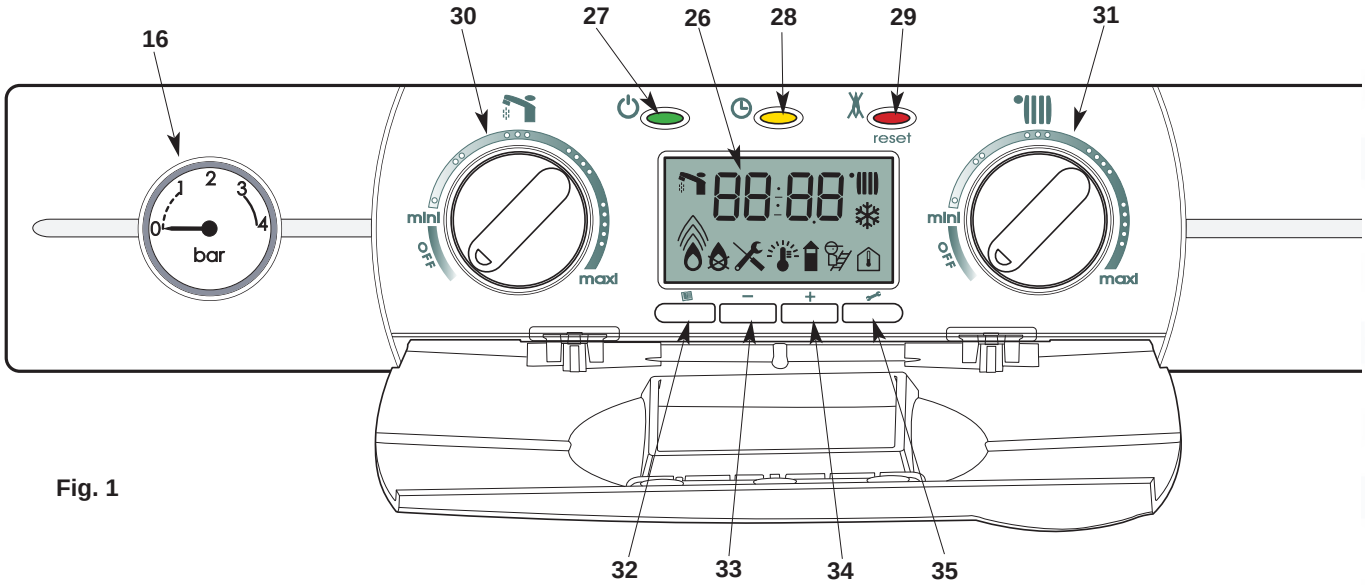

Fig. 1

Control panel (Fig. 1)

16.- Pressure gauge
26.- Display
27.- On/off push button and power on indicator light
28.- Programming button - domestic hot water temperature holding function -yellow indicator light
29.- Reset push button and red indicator lock-out light
30.- DHW control knob and temperature setting
31.- Central Heating control knob and temperature setting
32.- Menu button
33.- Reducing button
34.- Increasing button
35.- Setting button

Connecting bracket
Taps shown in Open position (Fig. 2)

39 : Gas service tap
40 : Water service tap
41 : Central heating flow isolating valve
42 : Central heating return isolating valve
43 & 44: Filling taps
45 : Filling loop

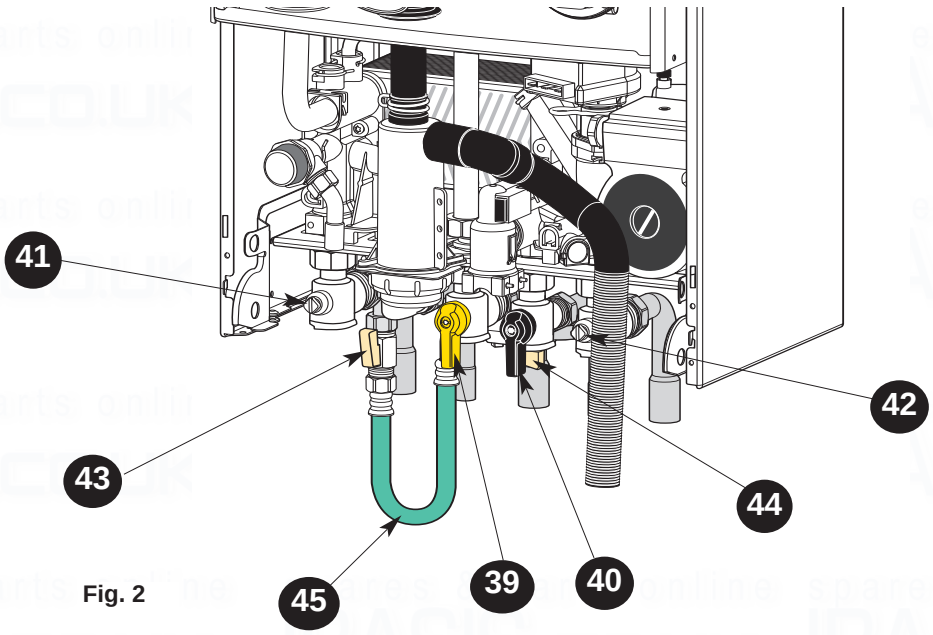

Fig. 2

2. How to use

Switching on and filling instructions

1. Check the pressure in the central heating system is above 0.7 bar and below 1.5 bar with the pressure gauge **16** (fig.1), should it be neccessary to re-pressurise the system,ensure the filling loop **45** (fig. 2) is attached, open the filling taps **43** & **44**, the pressure gauge will now start to rise, once the pressure reads 1.0 bar, close the filling taps and disconnect the filling loop.
2. Check that the gas service tap is opened at the gas meter and the main power is on. Green indicator **27** ⏻ Power ON
3. Open the gas tap **39** (fig.2).
4. The boiler is now ready to use.

NOTE: If the boiler is left off for a long time, some air in the gas pipe can hinder the first lighting attempts. (please refer to Section 19 Incorrect Function, page 47)

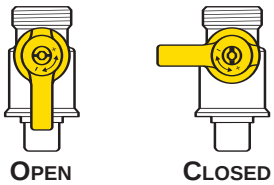

Setting the time and programming the domestic hot water exchanger temperature holding function

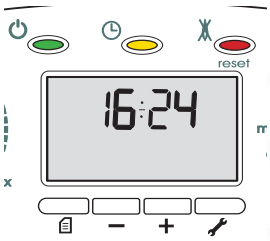

The time is set using the buttons located under the display panel.

Pressing the **setting** button ⚙ once for more than 5 seconds causes the hour value to flash. This can be adjusted using the ⊕ or ⊖ buttons. Pressing the **setting** button ⚙ again validates the hour value and causes the minutes value to flash. This can now be adjusted by pressing the ⊕ or ⊖ buttons then validated using the **setting** button ⚙. The time is now set and the programming start time for the hot water exchanger temperature holding function now flashes on the display.

There are 2 possibilities:

- either you wish to modify the setting. In this case, press the ⊕ or ⊖ buttons to modify the hour then press the **setting** button ⚙ to validate the hour, causing the minutes value to flash. This can then be adjusted using the ⊕ or ⊖ buttons, then validated using the **setting** button ⚙. The programming start time for the hot water exchanger temperature holding function is set. Follow the same procedure to set the programming end time for the hot water exchanger temperature holding function.
- or you wish to retain the original setting (6 a.m. - 11 p.m.). In this case, validate by pressing the **setting** button ⚙ twice once the time is set in order to end programming and exit the menu.

N.B. The temperature holding programming function is only activated if the ◷ button is pressed (indicator lit)

NOTE: THIS IS NOT A TIMER FOR CH CONTROL

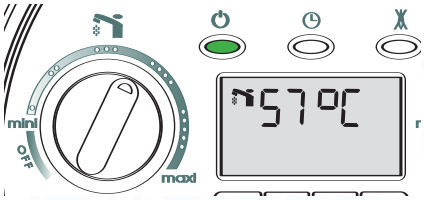

DHW mode

Turn the control knob **30** between min and max. During the adjustment, flashes.
The flashing goes on for a while after the adjustment, then the display indicates the time.

When DHW is drawn, the display indicates the following:

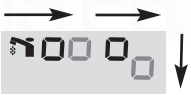

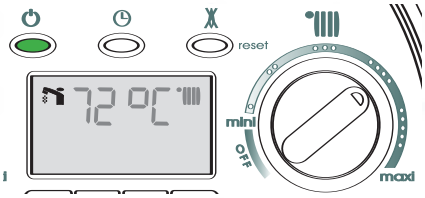

Heating mode

Turn the control knob **31** between min and max. During the adjustment flashes.
The flashing goes on for a while after the adjustment, the display will then indicate:
- the central heating flow temperature if the room thermostat is calling for heat.
- the time if the room thermostat is OFF.

Room thermostat request symbol

BURNER ON and output level

The flame digits will increase or decrease depending on the output.

Flame digit

Burner ON

"Programming" button: ◷ button not activated, the domestic hot water exchanger temperature holding function is activated permanently.
"Yellow" ◷ button activated, the temperature holding function respects the programme (11 p.m. OFF, 6 a.m. ON, original setting). The display indicates the following

Stand-by mode

Turn the control knobs **30** and **31** to the **OFF** position to deactivate the DHW and Heating. Leave the ON/OFF button On with the green light on.
During the stand-by mode the display indicates the time, anti-seizing and anti-freezing will be active.

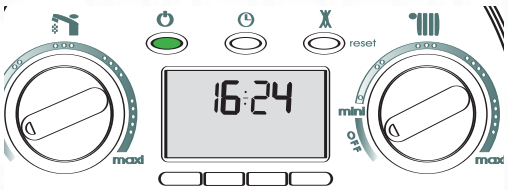

Switch OFF

Press the button ON/OFF.

During this mode the boiler will not operate, but is still connected to the mains.

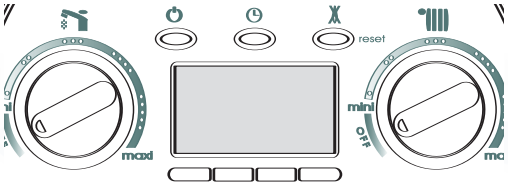

Anti-freezing mode

Turn the control knobs **30** and **31** to **OFF** to switch off the heating and hot water functions. Leave the On/Off button on with the green light on.
When the anti-freeze comes on, the corresponding code is displayed with the snowflake pictogram ❄ .

The two possible codes are 05 (anti-freeze - pump only) or 06 (anti-freeze - burner).
05: When this mode is active, the circulating pump operates for one minute and the diverter valve switches every 23 hours.
Caution: in this mode, the room thermostat anti-freeze function is inoperative.

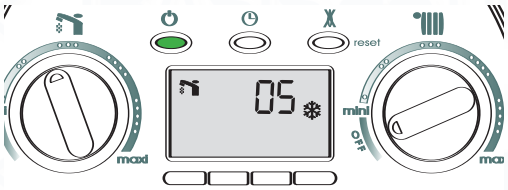

Boiler anti-freeze function:	the pump starts at 8°C the burner starts at 3°C

3. Maintenance

Your boiler will work more reliably and efficiently if regularly serviced. We recommend an annual service check. The service history of the appliance will be marked in the Sercice Interval Record (Section 25, page 61).

4. Guarantee

The manufacturer`s guarantee is for 12 months from the date of purchase. The guarantee is voidable if the appliance is not installed in accordance with the recommendations made herein or in a manner not approved by the manufacturer. To assist us in providing you with an efficient after sales service, please return the guarantee registration card enclosed with the boiler without delay.

5. Practical information

Cleaning the casing and control panel
Should it be necessary to clean the casing and control panel. do so only with a soft damp cloth, do not use any spray polishes or cleaners.

Precaution to avoid freezing

We recommend you contact your installer or local service centre for further advice on the actions to be taken to avoid the system freezing.

- **DHW system**
Turn off the main cold water supply and drain the boiler :
- Open a hot water tap
- Unscrew the cold water inlet tail
- **CH system**
Chose one of the following solutions :
- 1) Drain completely the Central Heating system
- 2) Protect the Central Heating system with anti freeze chemical products and verify the concentration periodically
- 3) Leave the Heating mode switched on and set the room thermostat to anti-freeze mode (between 5 and 10°C)
- 4) Leave your boiler in stand by mode, the anti-freeze device will switch on the pump and the burner if necessary.

6. Setting the time clock

6.1 Setting the mechanical clock

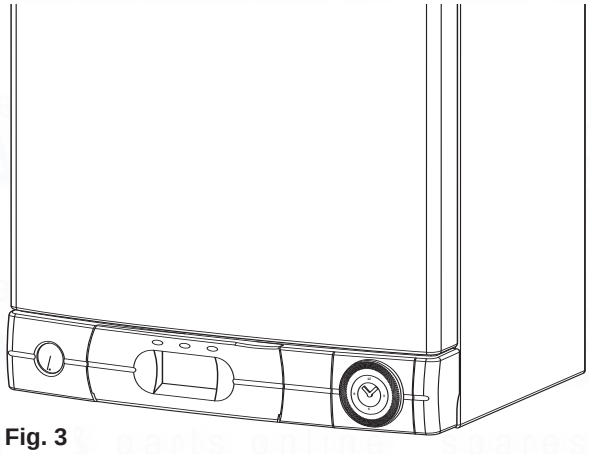

Fig. 3

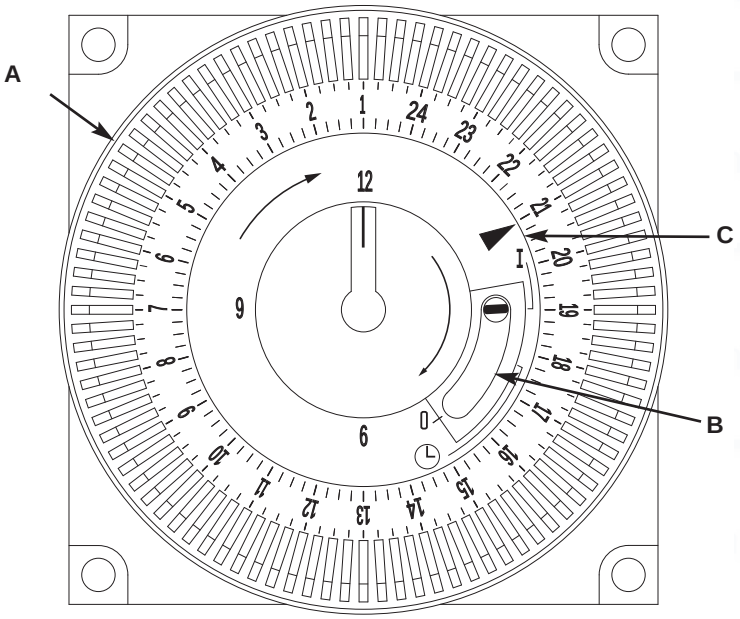

Fig. 4

1. General layout
The mechanical clock covers a 24 hour period. Each tappet represents 15 minutes **A** (Fig. 4). An override switch is located on the clock **B** (Fig 4).

2. To set the time
To set the time of day, grasp the outer edge of the dial and turn slowly clockwise until the correct time is lined up with the arrow **C** (Fig. 4).

3. To Set the "On" and "Off" times
The clock uses a 24hours system. e.g. 8 = 8.00 am and 18 = 6.00 pm "ON" periods are set by sliding all tappets between the "ON" time and the "OFF" time to the outer edge of the dial.The tappets remaining at the centre of the dial are the "OFF" periods.

4. For operation
Put the selector switch **B** to the ◷ symbol to control the central heating by the clock. Put the switch **B** to «**I**» to select permanent operation or to «**0**» to turn the central heating off permanently.

6. Setting the time clock (continued)

6.2 Setting the Digital Clock

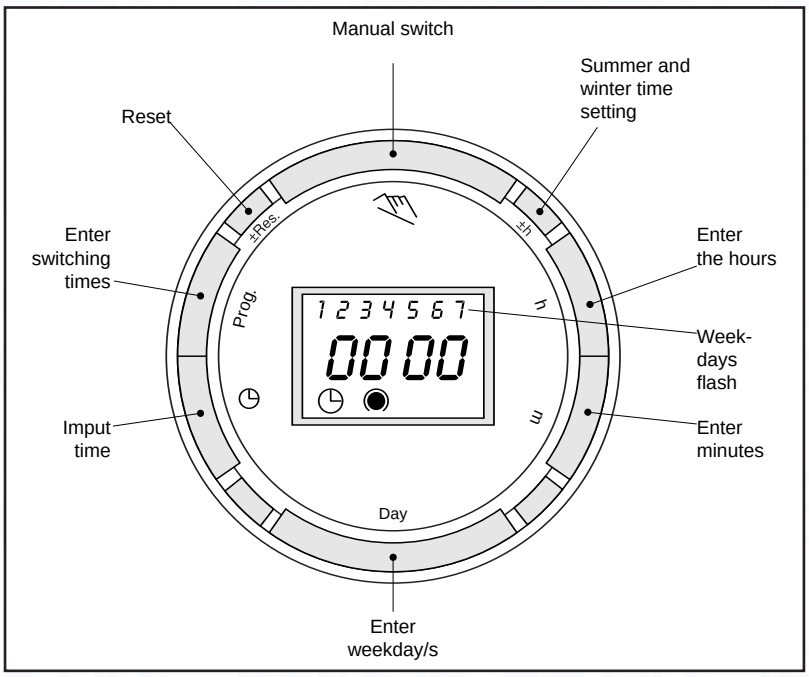

Automatic Operation	Manual Operation	Continuous Operation [ ]
= ON →	= ON	[●] = Continuously ON
= OFF →	= OFF	[○] = Continuously OFF
The switching times correspond to the program entered.	If the current switching mode is changed manually, the next switching time will be carried out automatically again according to the entered switching program.	You can only return to automatic mode from the continuously-ON [●] and continuously-OFF [○] switching modes by pressing the " " key.

Operating the time switch

The steps marked with the symbol " ► " are necessary to carry out a switching program.

Preparing for Operation

► Activate the "Res" switch (=RESET) to reset the time switch to its default setting (activate using a pencil or similar pointed instrument). Do this:
- every time you wish to "reset" the time switch
- to erase all switching times and the current time of day.

After approximately two seconds the following display appears:

► **Enter current time and weekday**
- Keep the "◷" button pressed down

During the summer time period press the +/- 1h button once.
Enter the hour using the "h" button
Enter the minutes using the "m" button
Enter the day using the "Day" button
1 = "Monday".....7 = Sunday
- Release the "◷" button.

6. Setting the time clock (continued)

► **Entering the switching times**

You have 20 memory locations available. Each switching time takes up one memory location.
Keep pressing the “Prog” button until a free memory location is shown in the display “– –:– –”.
Programme ON or OFF with the “ ” button :
“○”= OFF; “◉”= ON
Enter the hour using “h”
Enter the minutes using “m”
If a switching command is to be carried out every day (1 2 3 4 5 6 7) then store using the “ ” button, otherwise select the day(s) it is to be carried out by using the “Day” button.
When the day selection is left blank, the programmed switching instruction operates at the same time every day

1 2 3 4 5 6	= Monday – Saturday
1 2 3 4 5	= Monday – Friday
6 7	=Saturday – Sunday

Selection of single days: 1 = Mon. ..... 2 =Tues.
Save the switching time with the “ ” button.
The time switch enters the automatic operating mode and displays the current time of day.
Begin any further entry of a switching time with the “Prog” switch. If your entry is incomplete, the segments not yet selected will blink in the display. After programming is completed, and you return the time clock to the current time display with the “ ” button, the time clock will not activate any switching instruction required for the current time. You may need to manually select the desired switching state with the “ ” button. Thereafter, as the unit encounters further switching instructions in the memory in real time, it will correctly activate all subsequent switching instructions.

Manual Override Switch “ ”

With the “ ” you can change the current setting at any time. The switching program already entered is not altered.

Reading the programmed switching times

Pressing the “Prog” button displays the programmed switching times until the first free memory location appears in the display “– – : – –”.

If you now press the “Prog” button once again, the number of free memory locations will be displayed, e.g. “**18**”. If all memory locations are occupied, the display “**00**” appears.

Changing the programmed switching times

Press the “Prog” button repeatedly until the switching time you want to change is displayed. You can now enter the new data. See point “**Entering the switching times**”.

Notes on storing switching times:

If you end your entry of the switching times by pressing the “Prog” button, then the switching time you have entered will be stored and the next memory location displayed.

In addition, a complete switching command is stored **automatically** after around 90 seconds provided **no other** button is pressed. The time switch then enters the automatic operating mode and displays the current time again.

Deleting individual switching times

Press the “Prog” button repeatedly until the switching time you wish to delete is shown in the display. Then set to “– –” using the “h” or “m” button and keep the “ ” button pressed down for around 3 seconds. The switching time is now erased and the current time is displayed.

AM / PM time display

If you press the “+/-1h” and “h” button at the same time, the time display switches into the AM/PM mode.

7. Description

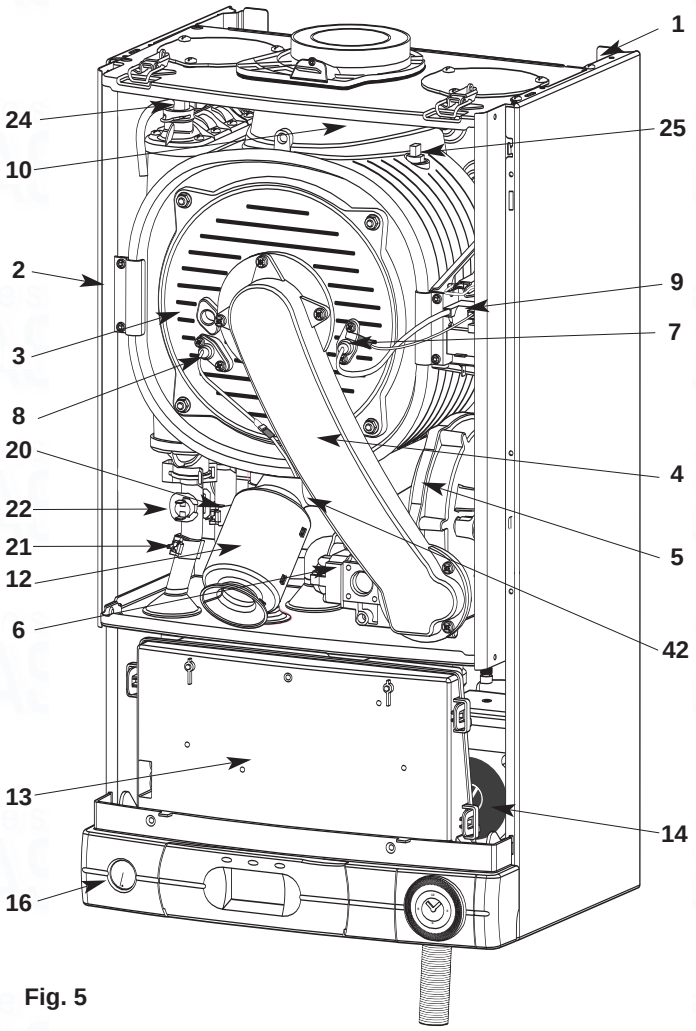

Fig. 5

1.- Steel chassis complete with expansion vessel
2.- Sealed chamber
3.- Burner and heat exchanger assembly
4.- Air / gas connection
5.- 24 V modulating fan
6.- Gas valve
7.- Ignition electrode
8.- Ionisation probe
9.- Ignitor
10.- Combustion products manifold
11.- Siphon
12.- Silencer
13.- Electrical box
14.- Pump
15.- Secondary heat exchanger
16.- Pressure gauge
17.- Three way valve
18.- Automatic air vent
19 - Domestic hot water flowswitch
20.- Main exchanger inlet thermistor
21.- Main exchanger outlet thermistor
22.- Overheat sensor
23.- Central heating pressure relief valve
24.- Manual air vent with pipe
25.- Thermo fuse

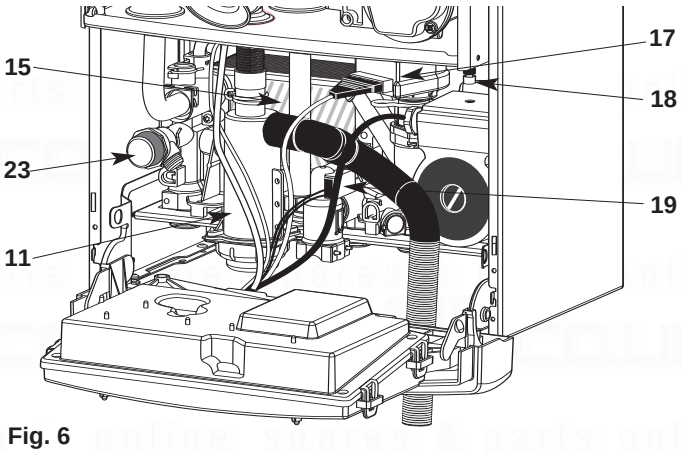

Fig. 6

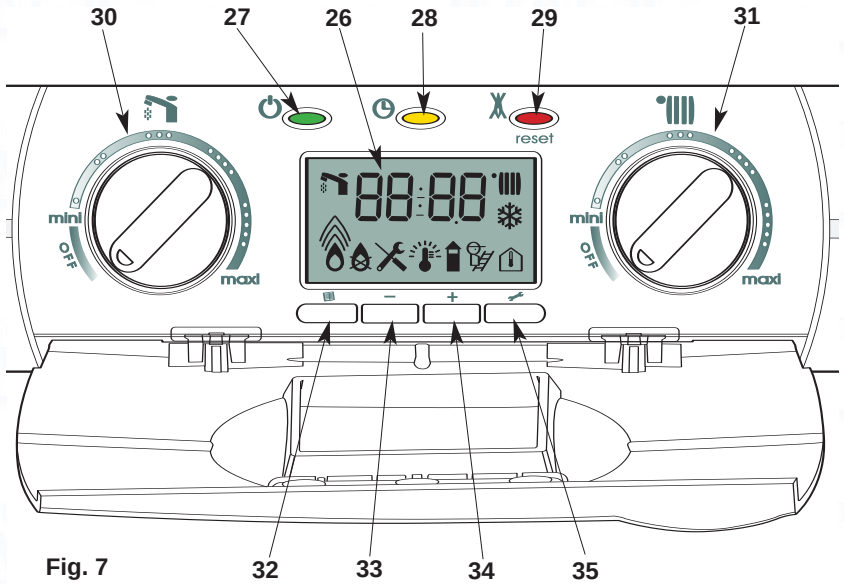

Fig. 7

26.- Display
27.- On/off push button and power on indicator light
28.- Programming button - domestic hot water temperature holding function - yellow indicator light
29.- Reset push button and red indicator locking light
30.- DHW control knob and temperature setting
31.- Central Heating control knob and temperature setting
32.- Menu button
33.- Reducing button
34.- Increasing button
35.- Setting button

8. Dimensions

All dimensions in mm

I	Safety valve C/H and condensate
J	Heating flow
K	D.H.W. outlet
L	Gas supply
M	Cold water inlet
N	Heating return

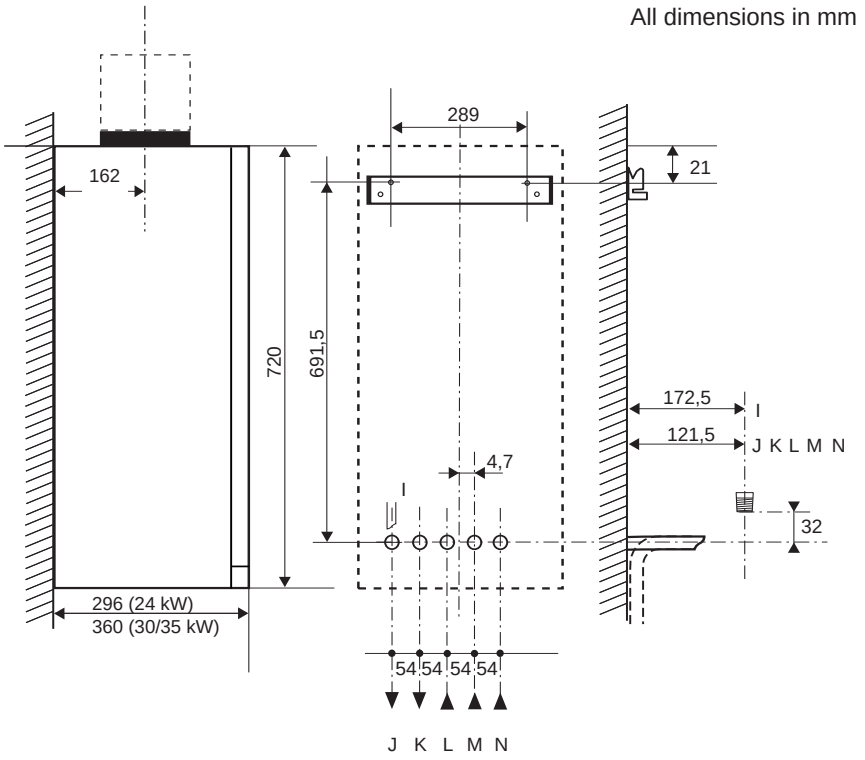

Fig. 8

With packaging :
24 kW : 37 kg
30 kW : 40 kg

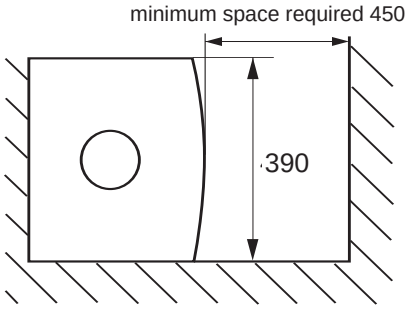

9. Hydraulic data

Pump Head Graph (15/50 & 15/60)

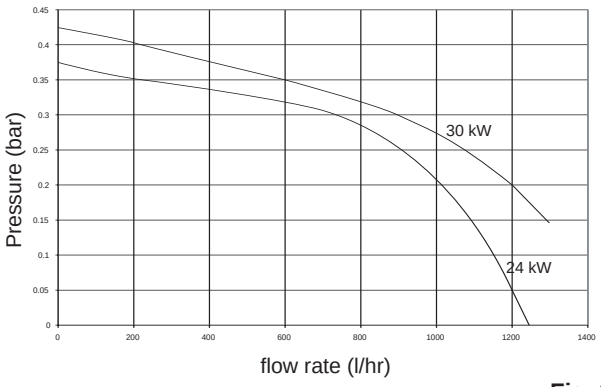

Fig. 9

The boiler is fitted with an automatic by-pass as standard.

The graph (Fig. 9) shows the development of the pressure available in relation to flow (on exit from the boiler ΔT 20°C).

To ensure correct operation, the minimum flow of the appliance must be 300 l/h. (Thermostatic taps closed).

Capacity of the installation.

The water heater is fitted with a pressurised expansion vessel.

Volumes : 6 litres

Pressure: 0,7 bar.

The volume of the expansion vessel in a pressurised appliance varies according to:

- the average operating temperature in °C

- the static height, which is the difference in metres between the highest point of the appliance and the expansion vessel axis).

The minimum cold filling pressure of the appliance is 1 bar (recommended pressure between 1.2 and 1.7 bar).

The pressure of the expansion vessel should always be greater than the static height (in metres) divided by 10.

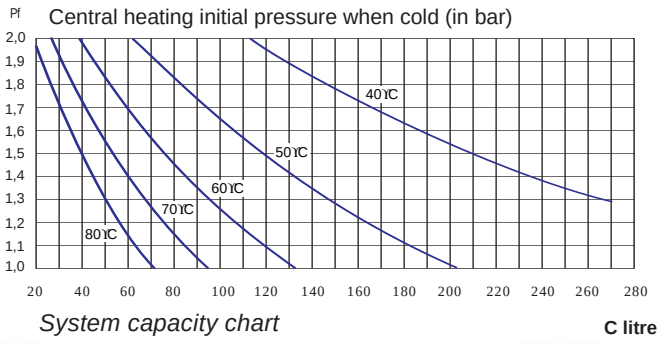

Fig. 10

10. Installation requirements

Reference Standards
In the United Kingdom, the installation and initial start up of the boiler must be by a CORGI Registered installer in accordance with the installation standards curently in effect, as well as with any and all local health and safety standards i.e. CORGI.

In the Republic of Ireland the installation and initial start up of the appliance must be carried out by a Competent Person in accordance with the current edition of I.S.813 “Domestic Gas Installations” and the current Building Regulations, reference should also be made the the current ETCI rules for electrical installation.

The installation of this appliance must be in accordance with the relevant requirements of the Local Building Regulations, the current I.E.E. Wiring Regulations, the by-laws of the local water authority, in Scotland, in accordance with the Building Standards (Scotland) Regulation and Health and Safety document No. 635, “Elelectricity at Work Regulations 1989” and in the Republic of Ireland with the current edition of I.S. 813 and the Local Building Regulations (IE).

C.O.S.H.H.
Materials used in the manufacture of this appliance are non-hazardous and no special precautions are required when servicing.

Codes of Practice
Installation should also comply with the following British Standards Codes of Practice:

BS 7593:1992	**Treatment of water in domestic hot water central heating systems**
BS 5546:1990	**Installation of hot water supplies for domestic purposes**
BS 5440-1:2000	**Flues**
BS 5440-2:2000	**Air Supply**
BS 5449:1990	**Forced ciculation hot water systems**
BS 6798:2000	**Installation of gas fired hot water boilers of rated input not exceeding 70kW**
BS 6891:1989	**Installation of low pressure gas pipe up to 28mm**
BS 7671:2001	**IEE Wiring Regulations**
BS 4814:1990	**Specification for expansion vessels**
BS 5482:1994	**Installation of L.P.G.**

and in the Republic of Ireland in accordance with the following codes of practice

I.S. 813	**Domestic Gas Installations**

Avoid installing the boiler where the air inlet can be polluted by chemical products such as chlorine (swimming pool area), or ammonia (hair-dresser), or alkalin products (launderette)

Flue
Detailed information on flue assembly can be found in **Section 12 “Connecting the flue”**.
The boiler must be installed so that the flue terminal is exposed to the free passage of external air at all times and must not be installed in a place likely to cause nuisance. It must not be allowed to discharge into another room or space such as an outhouse or closed lean-to.

Condensing boilers have a tendency to form a plume of water vapour from the flue terminal due to the low temperature of the flue gasses. The terminal should therefore be located with due regard for the damage or discolouration that might occur to buildings in the vicinity and consideration must also be given to adjacent boundaries, openable windows should also be taken into consideration when siting the flue.
The minimum acceptable clearances are shown below:

Fig. 11

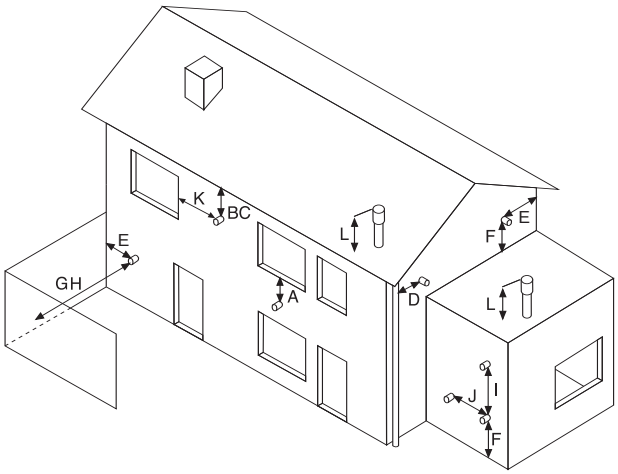

- A Directly below an opening, window, etc	300 mm
- B Below gutters, soils pipes or drain pipes	75 mm
- C Below eaves	200 mm
- D From vertical drain pipe or soil pipe	75 mm
- E From internal or external corner	300 mm
- F Above ground on a public walkways or patio	2100 mm
- G From a surface facing the terminal	2500 mm
- H From a terminal facing the terminal	2500 mm
- I Vertically from a terminal on the same wall	1500 mm
- J Horizontally from a terminal on the same wall	300 mm
- K Horizontally from an opening window	300 mm
- L Fixed by vertical flue terminal	

NOTE: THE FLUE MUST NOT BE INSTALLED IN A PLACE LIKELY TO CAUSE A NUISANCE.

It may be necessary to protect the terminal with a guard, if this is the case it will be necessary to purchase a stainless steel terminal guard. Reference should be made to the Building Regulations for guidance.

Ventilation
The room in which the boiler is installed does not require specific ventilation. **If it is installed in a cupboard or compartment permanent ventilation is not required for cooling purposes.**

Gas Supply
The gas installation and soundness testing must be in accordance with the requirements of BS 6891. Ensure that the pipe size is adequate for demand including other gas appliances on the same supply.

spares & parts online BASICS.co.uk

10. Installation requirements (continued)

Electrical Supply
The appliance requires an earthed 230V - 50 Hz supply and must be in accordance with current I.E.E. It must also be possible to be able to completely isolate the appliance electrically. Connection should be via a 3 amp fused double-pole isolating switch with contact separation of at least 3 mm on both poles. Alternatively, a fused 3 Amp. 3 pin plug and unswitched socket may be used, provided it is not used in a room containing a bath or shower. It should only supply the appliance.

The boiler is suitable for sealed systems only. The maximum working pressure for the appliance is 6 bar. All fittings and pipework connected to the appliance should be of the same standard. If there is a possibility of the incoming mains pressure exceeding 6 bar, particularly at night, then a suitable pressure limiting valve must be fitted.
The boiler is designed to provide hot water on demand to multiple outlets within the property. If there is a requirement for greater demands, for example if the property has several bathrooms and cloakrooms, a vented or unvented hot water storage system may be used.

Showers
Any shower valves used with the appliance should be of a thermostatic or pressure balanced type. Refer to the shower manufacturer for performance guidance and suitability.

Flushing and Water Treatment
The boiler is equipped with a stainless steel heat exchanger.

The detailed recommendations for water treatment are given in BS 7593:1992 (Treatment of water in domestic hot water central heating systems); the following notes are given for general guidance;

If the boiler is installed on an existing system, any unsuitable additives must be removed;

Under no circumstances should the boiler be fired before the system has been thoroughly flushed; the flushing procedure must be in line with BS7593:1992.

We highly recommend the use of a flushing detergent appropriate for the metals used in the circuit. These include cleansers produced by Fernox and BetzDearborn, whose function is to dissolve any foreign matter that may be in the system;

In hard water areas or where large quantities of water are in the system the treatment of the water to prevent premature scaling of the main heat exchanger is necessary.

The formation of scale strongly compromises the efficiency of the thermic exchange because small areas of scale cause a high increase of the temperature of the metallic walls and therefore add to the thermal stress of the heat exchanger.

Demineralised water is more aggressive so in this situation it is necessary to treat the water with an appropriate corrosion inhibitor.

Any treatment of water by additives in the system for frost protection or for corrosion inhibition has to be absolutely suitable for all the metals used in the circuit.

The use of a corrosion inhibitor in the system such as Fernox MB-1, BetzDeaborn Sentinel X100 or Fernox System Inhibitor is recommended to prevent corrosion (sludge) damaging the boiler and system;

If anti-freeze substances are to be used in the system, check carefully that they are compatible with the metals used in the circuit.

MTS suggests the use of suitable anti-freeze products such as Fernox ALPHI 11, which will prevent rust and incrustation taking place.

Periodically check the pH of the water/anti-freeze mixture of the boiler circuit and replace it when the amount measured is out of the range stipulated by the manufacturer (7 < pH < 8).
DO NOT MIX DIFFERENT TYPES OF ANTI-FREEZE

In under-floor systems, the use of plastic pipes without protection against penetration of oxygen through the walls can cause corrosion of the systems metal parts (metal piping, boiler, etc), through the formation of oxides and bacterial agents.

To prevent this problem, it is necessary to use pipes with an “oxygen-proof barrier”, in accordance with standards DIN 4726/4729**. If pipes of this kind are not used, keep the system separate by installing heat exchangers *of those with a specific system water treatment.***

IMPORTANT
Failure to carry out the water treatment procedure will invalidate the appliance warranty.

System Controls
The boiler is electrically controlled and is suitable for most modern electronic time and temperature controls. The addition of such external controls can be beneficial to the efficient operation of the system. The boiler connections for external controls are 12V DC and so only controls of 12V DC that have voltage free contacts should be used. (Section 13 Electrical Connections - page 25).

Location
The boiler can be installed on any suitable internal wall. Provision must be made to allow the correct routing of the flue and siting of the terminal to allow the safe and efficient removal of the flue products. A compartment or cupboard may be used provided that it has been purpose-built or modified for the purpose. It is not necessary to provide permanent ventilation for cooling purposes. Detailed recommendations are given in BS 5440 pt 2. If it is proposed that it is installed in a timber framed building then reference should be made to British Gas Document DM2, or advice sought from CORGI.

Where a room sealed appliance is installed in a room containing a bath or shower, the appliance and any electrical switch or appliance control, utilising mains electricity should be situated specifically in accordance with current IEE Wiring Regulations.

For unusual locations, special procedures may be necessary. **BS 6798:2000** gives detailed guidance on this aspect.

Condensate Discharge
The condensate discharge hose from the boiler must have a continuous fall of 2.5° and must be inserted by at least 50mm

10. Installation requirements (continued)

into a suitable acid resistant pipe - e.g. plastic waste or overflow pipe. The condensate discharge pipe must have a minimum diameter of 22mm, must have a continuous fall and preferably be installed and terminated to prevent freezing.
The discharge pipe must be terminated in a suitable position:

i) Connecting into an internal soil stack (at least 450mm above the invert of the stack). A trap giving a water seal of at least 75mm must be incorporated into the pipe run, there also must be an air break upstream of the trap.
ii) Connecting into the waste system of the building such as a washing machine or sink trap. The connection must be upstream of the washing machine/sink. If the connection is down stream of the waste trap then an additional trap giving a minimum water seal of 75mm and an air break must be incorporated in the pipe run, as above.
iii) Terminating into a gully, below the grid level but above the water level.
iv) Into a soakaway.

NOTE: If any condensate pipework is to be installed externally then it should be kept to a minimum and be insulated with a waterproof insulation and have a continuous fall. The total length of external pipe used should not exceed 3 metres.

Some examples of the type of condensate terminations can be found below.

1. Internal termination of condensate drainage pipe to internal stack

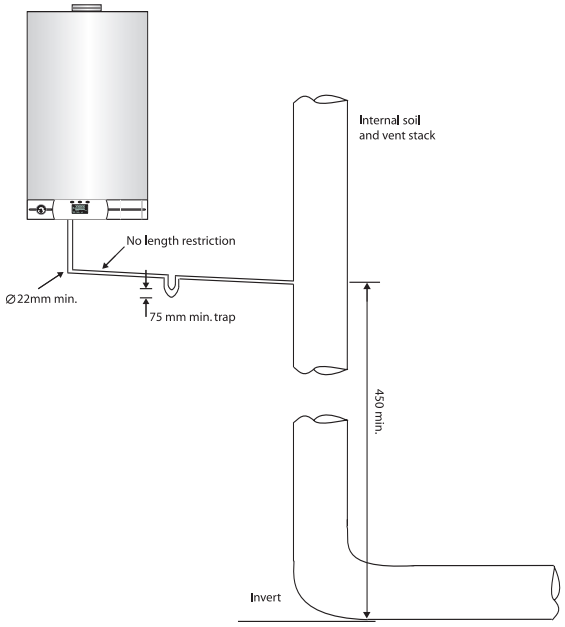

2. External termination of condensate drainage pipe via internal discharge branch (e.g. sink waste) and condensate siphon

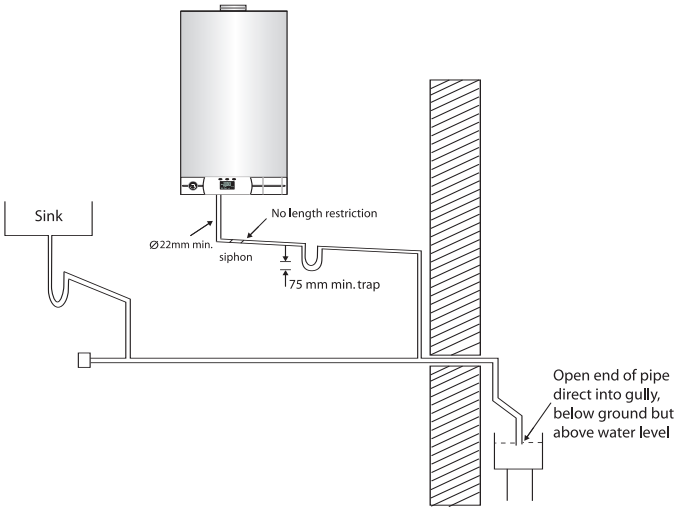

3. External termination of condensate drainage pipe via internal discharge branch (e.g. sink waste - proprietary fitting).

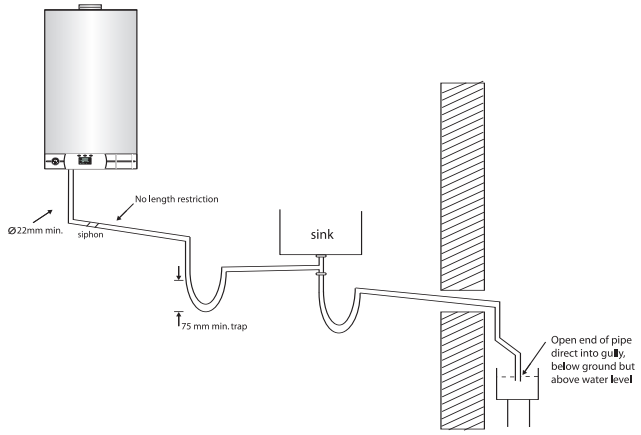

4. External termination of condensate drainage pipe via condensate siphon

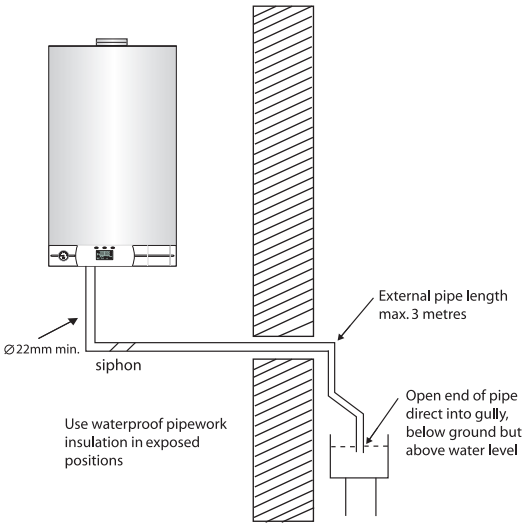

11. Installing the boiler

Please check that you are familiar with the installation requirements before commencing work (Section 10).

The installation accessories described in the following list are included in the boiler packaging:

- Hanging bracket
- A paper template (showing the dimensions of the boiler with 5 mm side clearances)
- Connection tails and valves
- Screws and washers
- Connection washers
- Installation, Servicing and Operating Instructions

Method of positioning the boiler on the wall.
The paper template can be used to ensure the correct positioning of kitchen cabinets etc. It also details the commissioning instructions.
The paper template has to be fixed to the wall and used to locate the position of the hanging bracket and the centre for the flue hole.
Drill and plug the wall and secure the hanging bracket using the screws provided. Remove the boiler from its packaging as shown in Fig. 17 and unscrew the two clamp locking bolts **A** and remove the casing (Fig. 13).
Place the boiler on the wall on the hanging bracket (Fig. 14).
NOTE: THE APPLIANCE MUST NOT BE FITTED ON A COMBUSTIBLE WALL SURFACE.

Connecting the boiler to the system

- Remove the boiler casing as described in Section 18.
- Push in the tabs "**P**" (Fig. 14) on either side of the boiler and pivot the electrical box forward to gain access to the valve connections
- Remove the caps and connect the boiler to the taps using washers provided in the plastic bag.
  4 x fibre washers for the C/H flow and return, hot water outlet and cold water inlet connections
  1 x rubber washer for gas connection

Safety valve discharge
The pressure relief valve tube is made of copper. It should terminate below the boiler safely outside the premises. Care should be taken that it does not terminate over an entrance or window or where a discharge of heated water could endanger occupants or passers by.

Fill the Central Heating and DHW system and bleed air from system as described in Section 14.
The system should be carefully checked for leaks, as frequent refilling could cause premature system corrosion or unnecessary scaling of the heat exchanger. The pipe from the siphon (11 Fig. 5) should be connected to a drain as described in the relevant Brittish regulations.
Pay special attention to not bend the condensate silicone drain pipe such as the flow will be interrupted. Please use exclusively drain pipe material compatible with condensate products. (refer to **BS 6798 : 2000**)
The condensate flow can reach 2 litres / hour; because of the acidity of the condensate products (Ph close to 2), take care before operation.

Fitting the Horizontal Flue
Attention ! Before starting the boiler, the siphon (11 Fig. 5) must be filled with water. Before fitting the flue l onto the boiler, pour 1/4 litre of water in the exhaust pipe as shown in Fig. 16.

Instructions on fitting the flue can be found in Section 12.

IMPORTANT!!
Use only the specific condensation flue kit supplied by MTS.

11. Installing the boiler (continued)

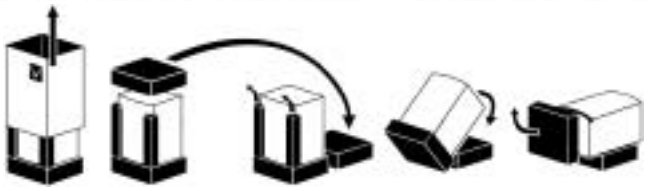

Fig. 12

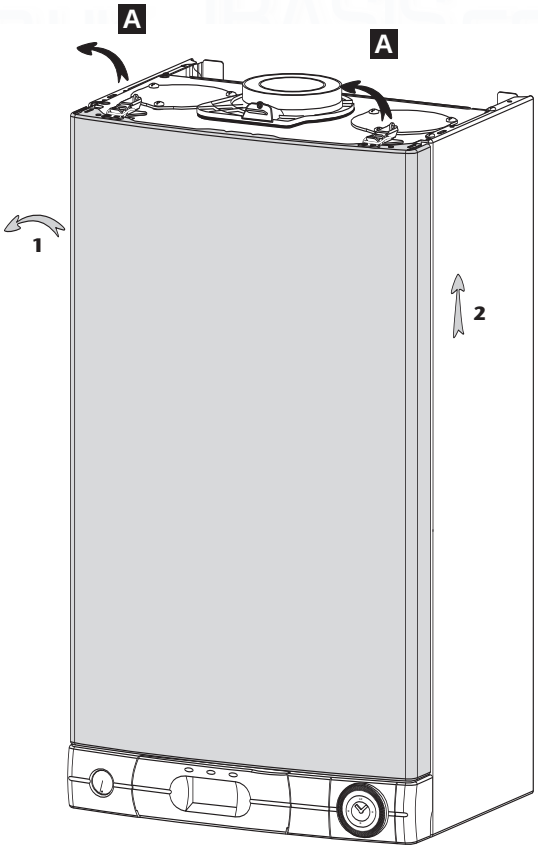

Fig. 13

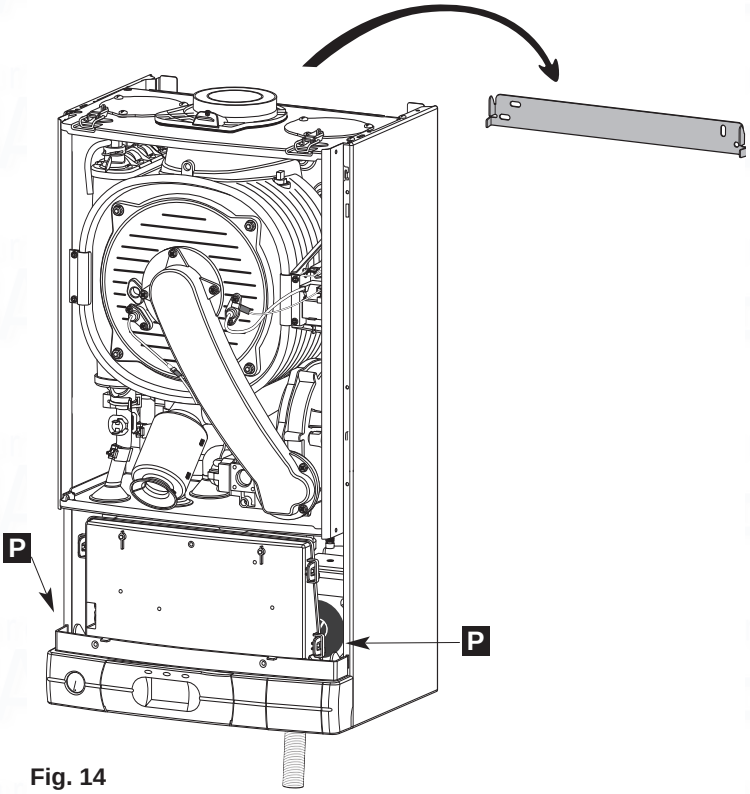

Fig. 14

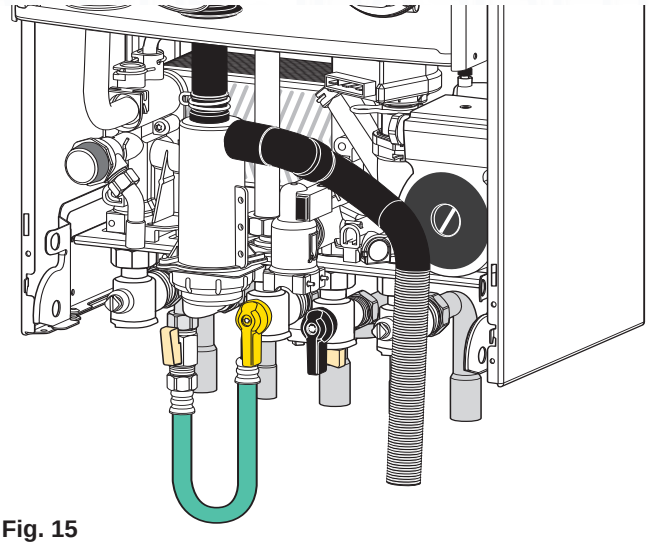

Fig. 15

12. Connecting the Flue

The boiler should only be installed with a flue system supplied by MTS (GB) Limited.
These kits are supplied separately to the appliance in order to respond to different installation solutions. For more information with regard to the inlet/outlet accessories consult the accessory catalogue. The boiler is supplied ready for connection to a concentric flue system.

NOTE: SEE PAGE 24 FOR MAXIMUM AND MINIMUM FLUE RUNS (TABLES A, B AND C)

IMPORTANT!!
BEFORE CONNECTING THE FLUE, ENSURE THAT 1/4 LITRE OF WATER HAS BEEN POURED INTO THE EXHAUST CONNECTION TO FILL THE CONDENSATE TRAP (FIG. 16). SHOULD THE TRAP BE EMPTY THERE IS A TEMPORARY RISK OF FLUE GASSES ESCAPING INTO THE ROOM.

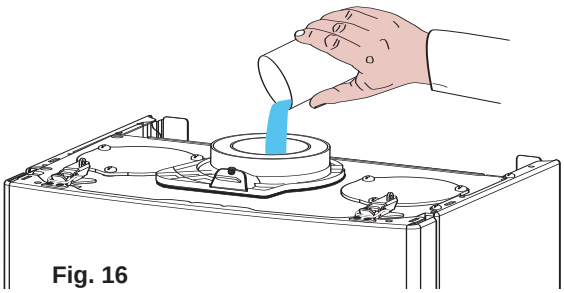

Fig. 16

Warning
The exhaust gas ducts must not be in contact with or close to inflammable material and must not pass through building structures or walls made of inflammable material.
When replacing an old appliance, the flue system must be changed.

Important
Ensure that the flue is not blocked.
Ensure that the flue is supported and assembled in accordance with these instructions.

Ø 60/100 mm

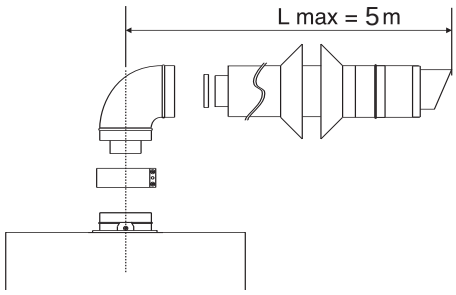

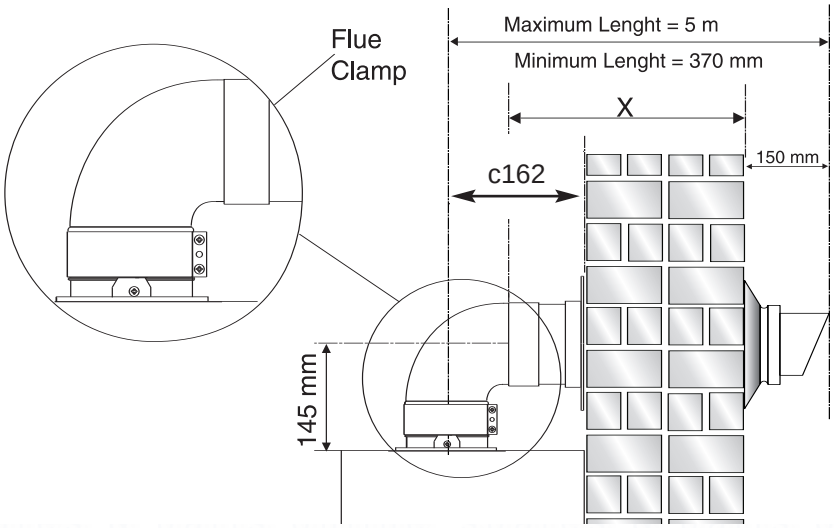

Fig. 17

Installation without extension

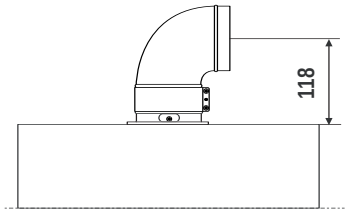

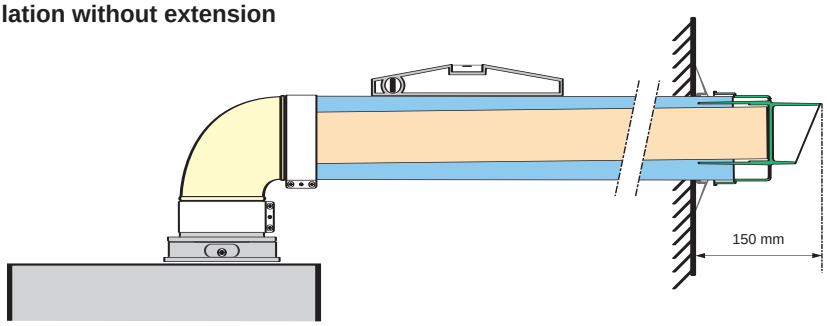

Fig. 18

Installation with extension

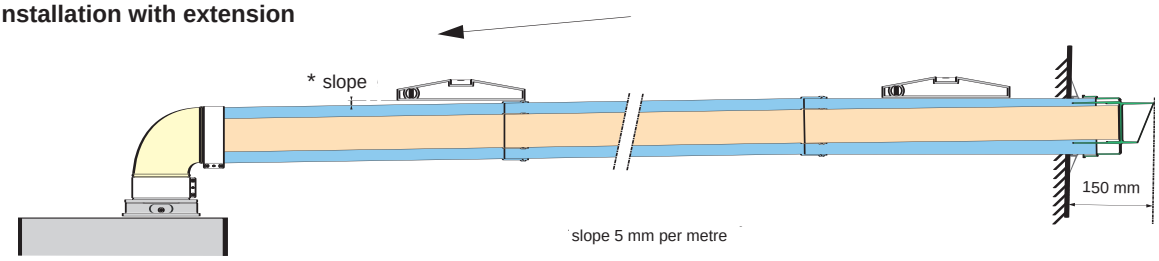

12.1 Fitting the coaxial flue (Ø 60/100 Horizontal)

Contents:
1x Silicone O-Ring (60mm)
1x Elbow (90°)
2x Wall Seals (Internal & External)
1x Flue Pipe including Terminal (1 metre - 60/100)
1x Flue Clamp
1x Screws
1x Seal

Once the boiler has been positioned on the wall, insert the elbow into the socket and rotate to the required position. NOTE: It is possible to rotate the elbow 360° on its vertical axis.

Using the flue clamp, seals and screws supplied **(Fig 19)** secure the elbow to the boiler.

The 1 metre horizontal flue kit (3318073) supplied is suitable for an exact **X dimension** of 815mm.

Measure the distance from the face of the external wall to the face of the flue elbow **(X - Fig 17),** this figure must now be subtracted from 815mm, you now have the total amount to be cut from the plain end of the flue.

Draw a circle around the outer flue and cut the flue to the required length taking care not to cut the inner flue, next cut the inner flue ensuring that the length between the inner and outer flue is maintained. **(Fig 19)**.
e.g.
X = 555mm
815-555 = 260mm (Length to be cut from the plain end of the flue).

Once cut to the required length, ensure that the flue is free from burrs and reassemble the flue. If fitting the flue from inside of the building attach the grey outer wall seal to the flue terminal and push the flue through the hole, once the wall seal has passed through the hole, pull the flue back until the seal is flush with the wall. Alternatively, the flue can be installed from outside of the building, the grey outer seal being fitted last.

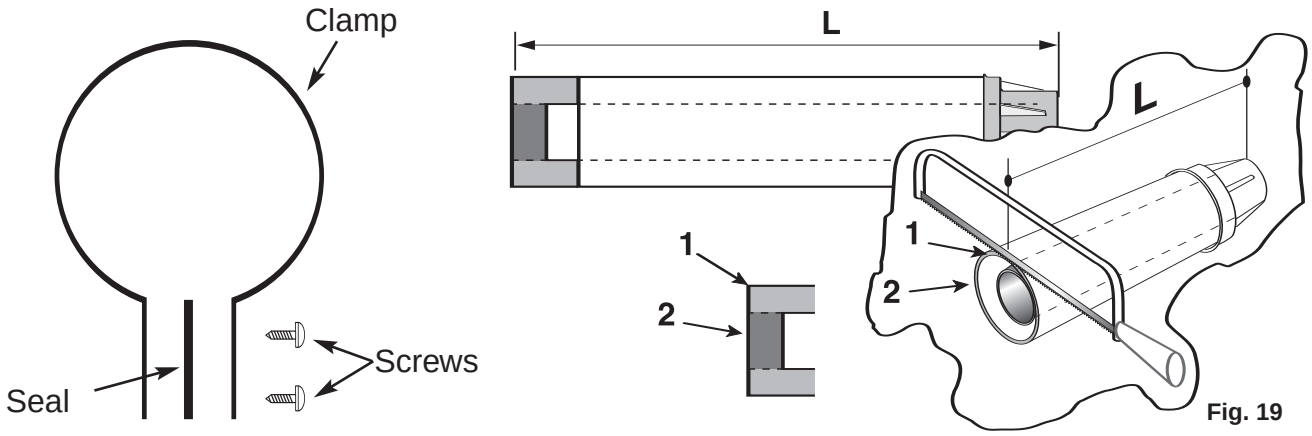

Fig. 19

12.2 Fitting the 5" Flue (Ø 80 / 125 Horizontal/vertical)

Should the flue require extending, the flue connections are push fit, however, one flue bracket should be used to secure each metre of flue.

NOTE: SEE PAGE 23 FOR MAXIMUM AND MINIMUM FLUE RUNS.

Once the boiler has been positioned on the wall, it is necessary to insert the **Ø**80/125 adaptor (**Fig. 20**) for both horizontal and vertical flue runs into the boiler flue socket (not supplied with flue kit - **Part No 3318095**).

Push the adaptor onto the boilers flue connection, grease the seals then add extensions or elbows as required, secure the adaptor, using the clamp and screws provided.

To fit extensions or elbows it is first necessary to ensure that the lip seal is fitted correctly into the inner flue, once verified, it is simply necessary to push them together, no clamps are necessary to secure the flue components.

Before proceeding to fit the flue, ensure that the maximum flue length has not been exceeded (See the tables on Page 23) and that all elbows and bends have been taken into consideration, the maximum flue length is 10 metres, for each additional 90° elbow 1 metre must be subtracted from the total flue length, and for each 45° 0.5 metres must be subtracted from the total flue length **(the height of the vertical adaptor and a 45° bend can be seen in Fig. 21 and a 90° bend in Fig. 22)**.

NOTE: **DO NOT** CUT THE VERTICAL FLUE KIT.

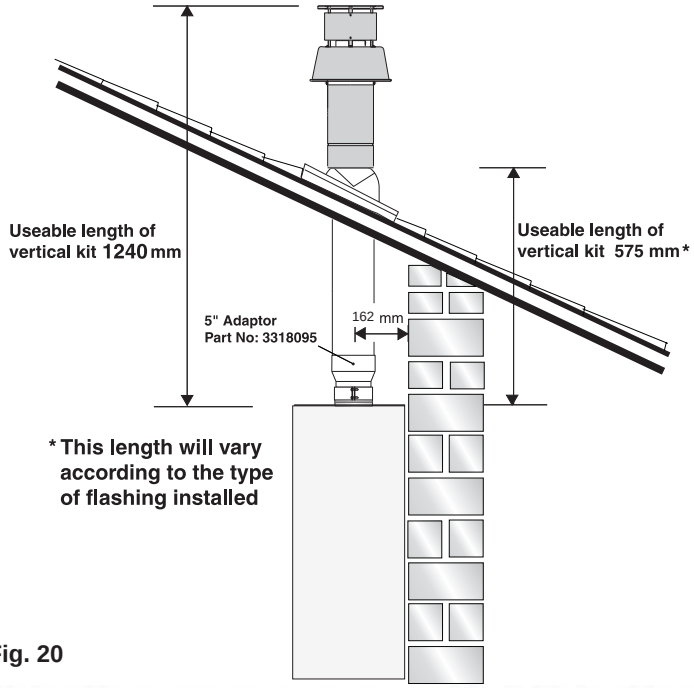

Fig. 20

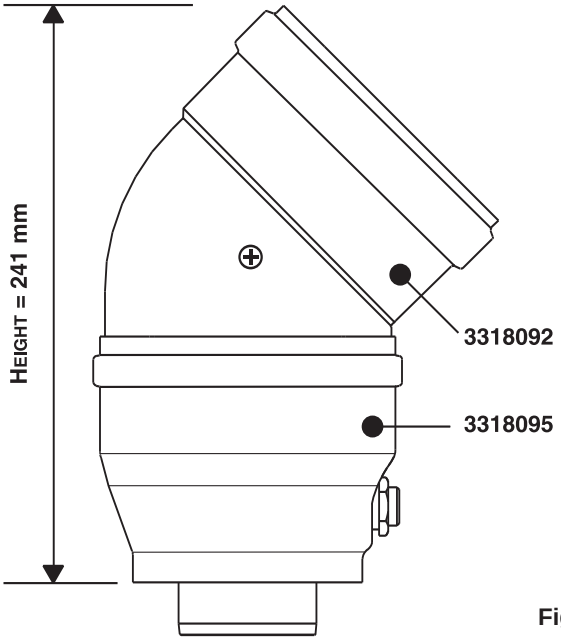

Fig. 21

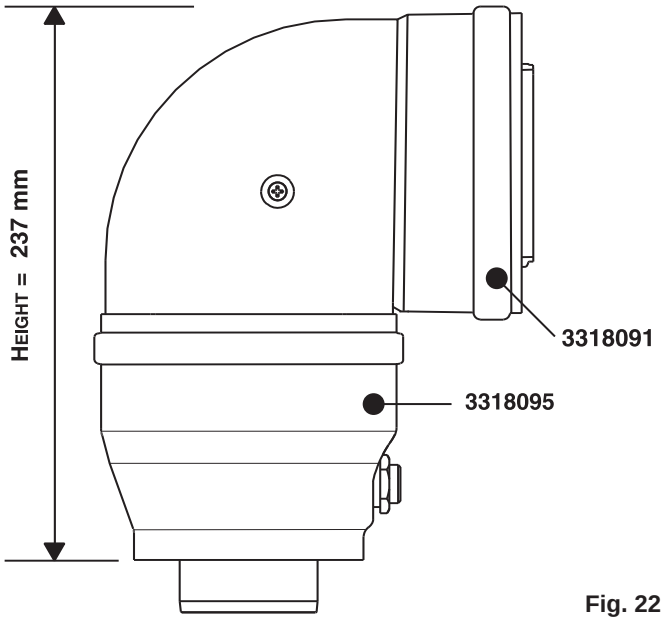

Fig. 22

12.3 Fitting the Coaxial Flue (Ø 60 / 100 Vertical)

NOTE: SEE PAGE 23 FOR MAXIMUM AND MINIMUM FLUE RUNS.

CONTENTS:
1X SILICONE O-RING (60mm)
1X CONICAL ADAPTOR (60/100mm)
1X VERTICAL FLUE KIT (80/125mm)
3X SCREWS

The vertical flue kit is supplied with a specially designed weather proof terminal fitted, it can be used either with a flat roof or a pitched roof.

The Vertical flue kits useable lengths with the pitched roof flashings are indicated in **Fig. 23**.

Before proceeding to fit the flue, ensure that the maximum flue length has not been exceeded (See the tables on Page 19) and that all elbows and bends have been taken into consideration, the maximum flue length is 4 metres, for each additional 90° elbow 1 metre must be subtracted from the total flue length, and for each 45° 0.5 metres must be subtracted from the total flue length **(the height of the vertical adaptor and a 45° bend can be seen in Fig. 24)**.

Mark the position of the flue hole in the ceiling and/or roof (see **Fig. 23** for distance from wall to the centre of the flue).

Cut a 120mm diameter hole through the ceiling and/or roof and fit the flashing plate to the roof.

DO NOT cut the vertical flue kit.

To connect the vertical flue kit directly to the boiler, place the vertical starter kit **(Part No. 3318079)** (see **Figs. 23 & 24**) onto the exhaust manifold and secure with the clamp, fit the vertical adaptor onto the vertical starter kit (note: there is no need to use a clamp to secure this as it is a push fit connection), the vertical flue kit must then be inserted through the roof flashing, this will ensure that the correct clearance above the roof is provided as the terminal is a fixed height.

Should extensions be required, they are available in 1 metre **(Part No. 3318077)**, 500mm **(Part No. 3318078)** and 160mm lengths, they must be connected directly to the vertical starter kit before connecting the adaptor to allow the vertical flue kit to be fitted. In the event that extension pieces need to be shortened, they ***must*** only be cut at the male end and it must be ensured that the inner and outer flue remain flush.

When utilising the vertical flue system, action must be taken to ensure that the flue is supported adequately to prevent the weight being transferred to the appliance flue connection by using 1 flue bracket per extension.

When the flue passes through a ceiling or wooden floor, there must be an air gap of 25mm between any part of the flue system and any combustible material. The use of a ceiling plate will facilitate this. Also when the flue passes from one room to another a fire stop must be fitted to prevent the passage of smoke or fire, irrespective of the structural material through which the flue passes.

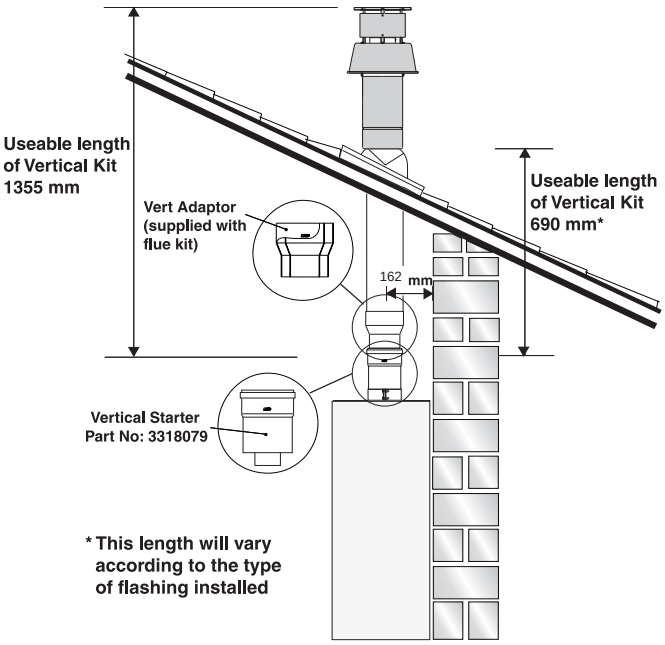

Fig. 23

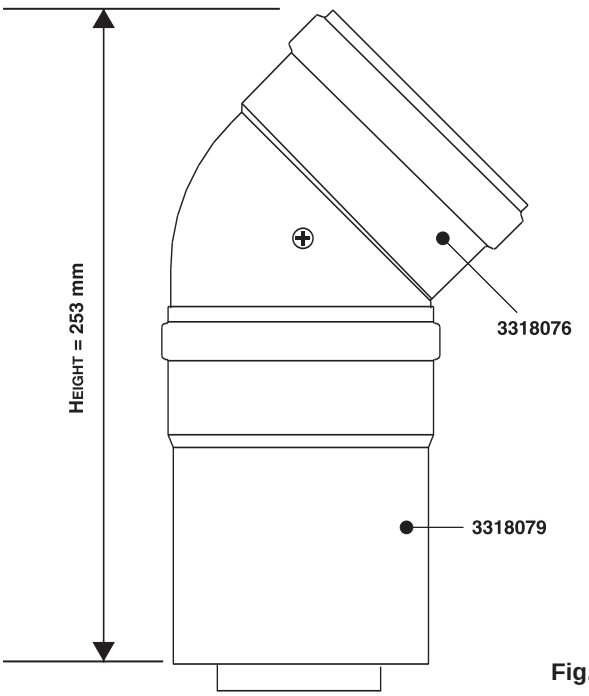

Fig. 24

12.4 Fitting the twin pipe (Ø80/80)

NOTE: SEE PAGE 23 FOR MAXIMUM AND MINIMUM FLUE RUNS (TABLE C)

Where it is not possible to terminate the flue within the distance permitted for coaxial flues, the twin flue pipe can be used by fitting a special adaptor to the flue connector and using the aperture for the air intake located on top of the combustion chamber.

Always ensure that the flue is adequately supported, avoiding low points. (MTS supply suitable clamps as Part No. 705778).
To utilise the air intake it is necessary to:

1) Take the air intake cover off
2) Assemble the flange on the header supplied with the boiler
3) Insert the restrictor if necessary, on the tube or the elbow
4) Insert the header on the tube or the elbow up until the lower stop
(you do not have to use the washer).
5) Insert the elbow/header in the boiler air intake hole and fasten it with screws

The twin flue pipes can be fitted with or without additional elbows and need no clamps, simply ensure that the red o-ring is inserted in the female end of the flue pipe and push the extension piece fully into the previous section of flue pipe or elbow, check that the o-ring is not dislodged when assembling the flue.

Twin pipe can also be converted back to Coaxial flue to enable vertical termination with a coaxial kit by using the pipe bridge (Twin - Coaxial Adaptor - Part No. 705767). When running the twin flue pipe vertically.

It is not recommended that the pipe bridge for horizontal termination, however in the unlikely event that this proves to be a necessity it is extremely important that the entire flue has a fall of 5mm in every metre back to the boiler, and where the 60mm inner flue of the concentric terminal connects to the pipe bridge, this point must be adequately sealed with silicone sealant to avoid condense leakage at this point.

When siting the twin flue pipe, the air intake and exhaust terminals must terminate on the same wall, the centres of the terminals **must** be a minimum of 280 mm apart and the air intake **must** not be sited above the exhaust terminal (refer to Fig. 29). The air intake pipe can be run horizontally, however, the terminal and the final 1 metre of flue must be installed with a fall away from the boiler to avoid rain ingress.

It is also strongly recommended that the air intake pipe run be constructed of insulated pipe to prevent condense forming on the outside of the tube.

The maximum permissible flue length for twin flue is dependent on the type of run used.

For flue runs with the intake and exhaust pipes under the same atmospheric conditions (TYPE 4) the maximum length is 60 metres (24kW and 30kW), for runs with the terminals under different atmospheric conditions (TYPE 5) the exhaust terminal **must** extend 0.5 metres above the ridge of the roof (this is not obligatory if the exhaust and air intake pipes are located on the same side of the building). For TYPE 5 also, the maximum permissible combined length is 60 metres (24kW and 30kW).

The maximum length is reached by combining the total lengths of both the air intake and exhaust pipes. Therefore a maximum length of 60 metres for example, will allow a flue run of 30 metres for the air intake and 30 metres for the exhaust pipes, also for each 90° elbow 2.2 metres must be subtracted from the total length and for each 45° elbow 1.4 metres must be subtracted from the total flue length.

Some of the acceptable flue configurations are detailed on page 25.

For further information relating to flue runs not illustrated, please contact the Technical Department on 0870 241 8180.

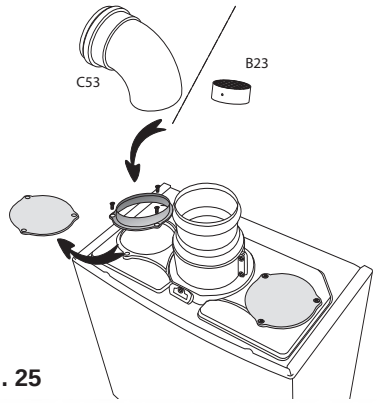

Fig. 25

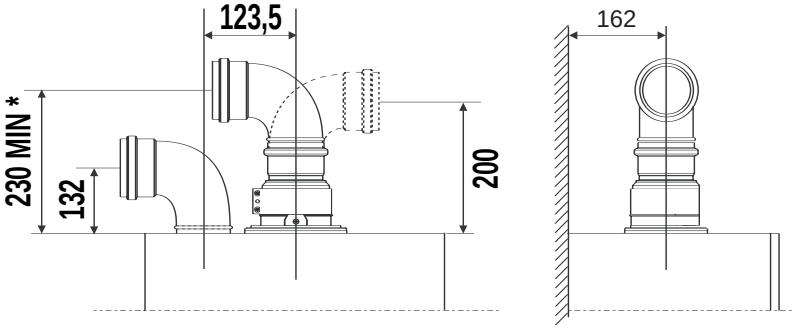

Fig. 26

12. Connecting the flue (continued)

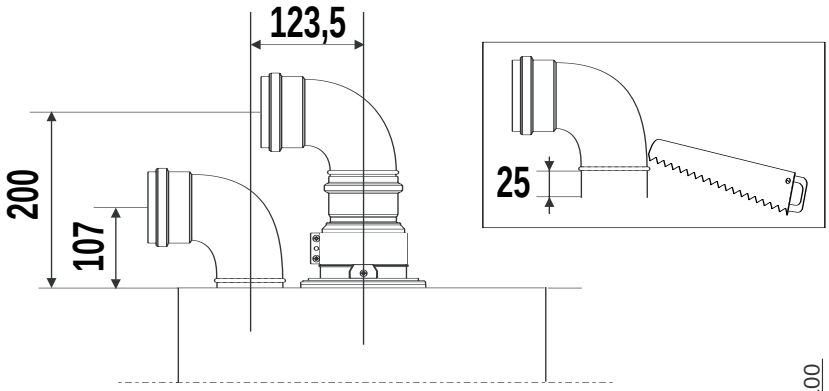

Fig. 27

In the event that twin flue pipes are used, and the boiler has a side clearance of less than 60mm from the wall, it is necessary to cut a larger diameter hole for the flue pipe, this should be ø100 mm, this will then allow for easier assembly of the air intake elbow and the tube outside the wall (see Fig. 28).

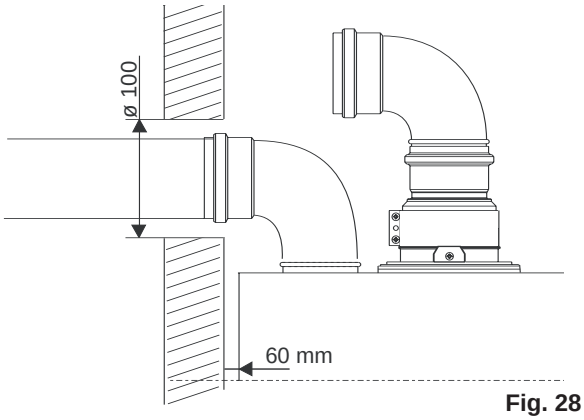

Fig. 28

TABLE A	Concentric outlet 60/100	Min length	Max. length	Length equivalency for	
	24 , 30 kW (Type 1, Type 2, Type 3)	0.3 m	10m	45° elbow	0.5 m
				90° elbow	1 m
TABLE B	Concentric outlet 80/125	Min length	Max. length		
	24 , 30 kW (Type 1)	0.3 m	30 m	45° elbow	0.5 m
	24 , 30 kW (Type 2, Type 3)	0.3 m	35 m	90° elbow	1 m
TABLE C	Twin flue outlet 24 , 30 kW	Min length	Max. length		
	Type 4 80/80	10 m	70 m (35m air / 35m exhaust)	45° elbow	1.4 m
	Type 5 80/80	10 m	70 m (35m air / 35m exhaust)	90° elbow	2.2 m

For coaxial systems, the maximum development value, mentioned in the table above also takes into account an elbow.
For twin flue systems the maximum development value, mentioned in the table includes the exhaust gas/air intake terminal.

Type 5 outlets should respect the following instructions:
1- Use the same ø 80 mm flue pipes for the gas intakes and exhaust gas ducts.
2- If you need to insert elbows in the gas intake and exhaust gas ducts, you should consider for each one the equivalent length to be included in the calculation of developed length.
3- The exhaust gas duct should jut above the roof by at least 0.5 m.
4- The intake and exhaust gas ducts in Type 5 must be installed on the same wall, or where the exhaust is vertical and the air intake horizontal, the terminals must be on the same side of the building.

12. Connecting the flue (continued)

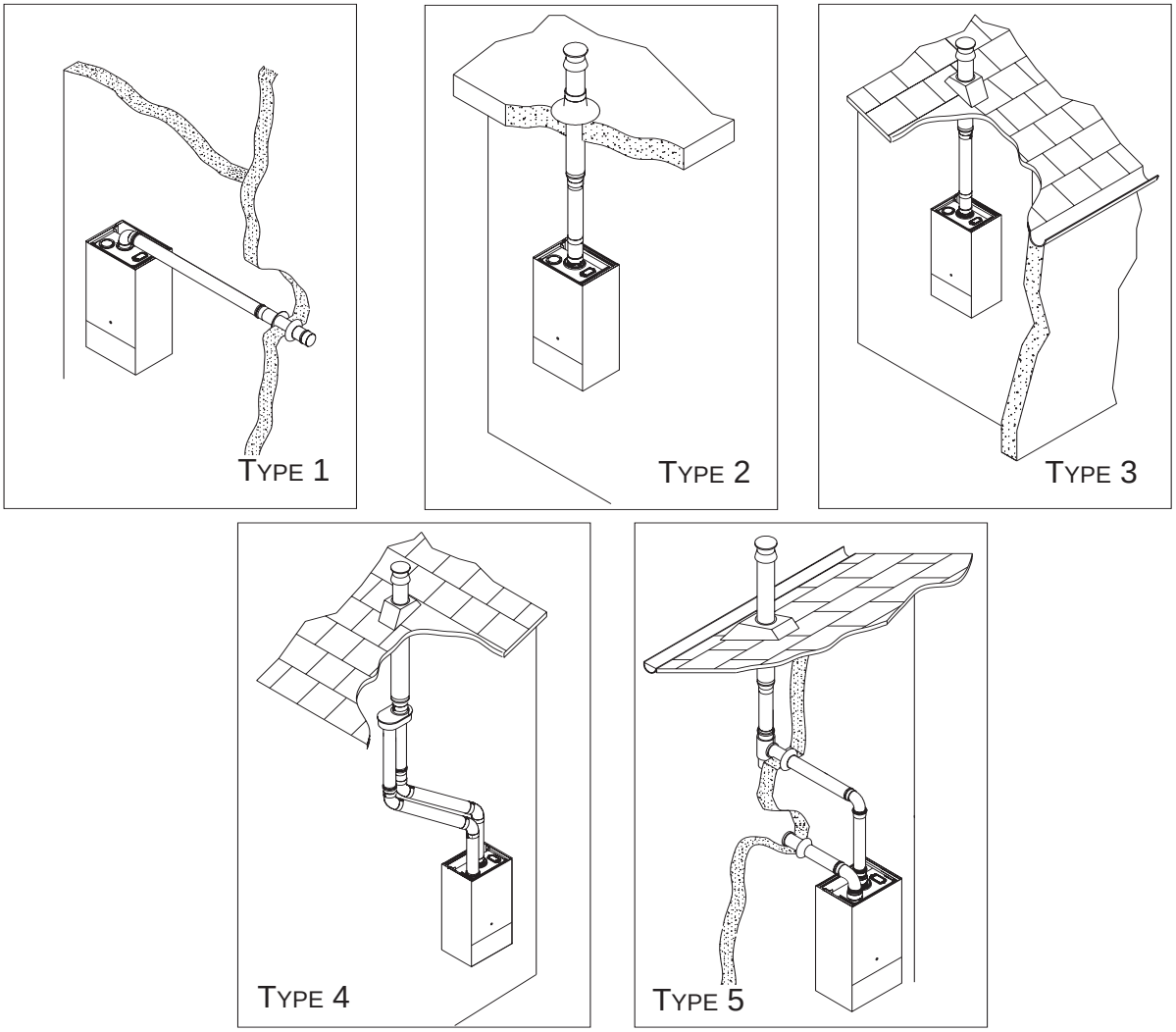

NOTE: DRAWINGS ARE INDICATIVE OF FLUEING OPTIONS ONLY.

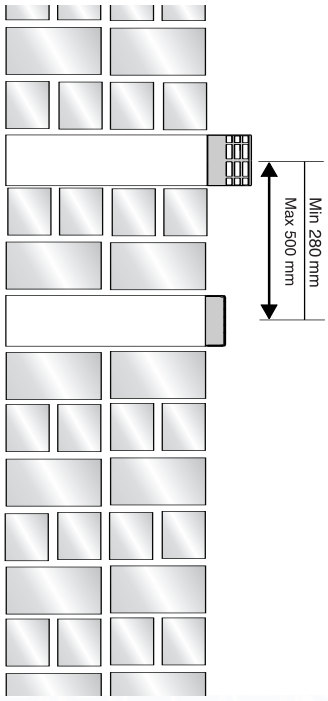

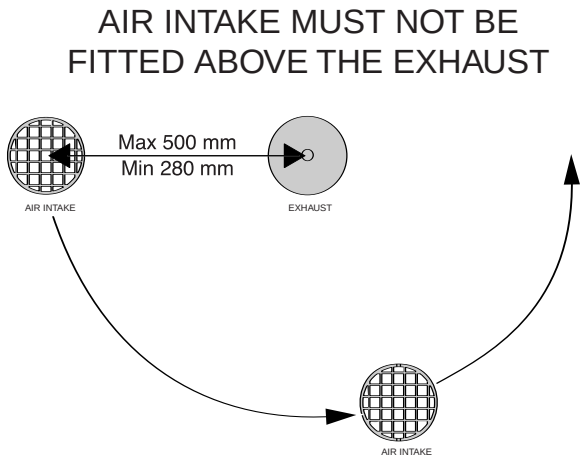

Fig. 29

13. Electrical connections

Making the Electrical Connections

Hinge down the electrical box to gain access to the electrical connections. Push in the tabs **P** (Fig. 30) on either side of the boiler and pivot the box forward.

Remove the PCB cover (see Section 18.4 - page 50). Connect the live neutral and earth wires to the main cable.

If using a room thermostat or other external control, they can be connected in place of the link on the terminal block (Diagram A- Fig.32).

Note: Use only controls designed for voltage free switching or 24V supply. Do not connect to a 230V supply, and do not run 230v cables alongside the low voltage cables.

All necessary settings for room thermostat operations are described in Section 17 ADJUSTMENTS AND SETTINGS.

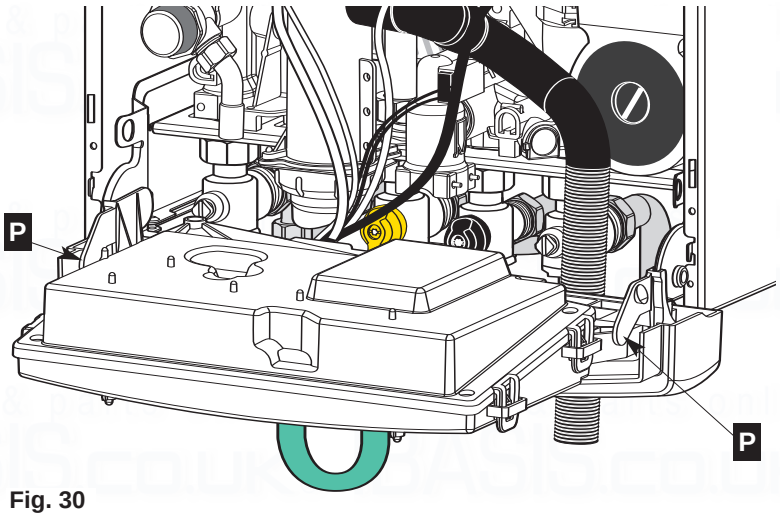

Fig. 30

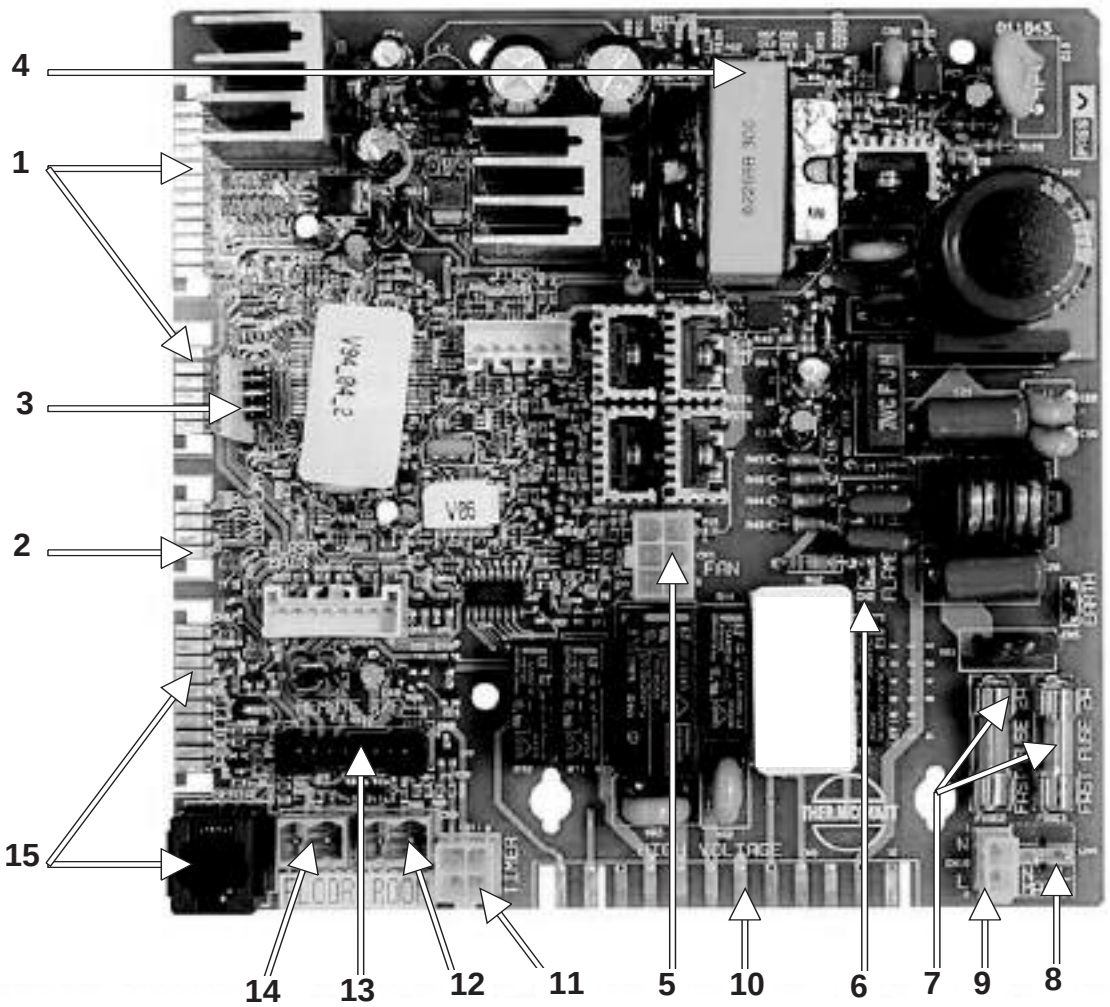

Fig. 31

LEGEND

1	NTC Connectors
2	Display Connectors
3	EEPROM Key
4	24V DC Supply
5	Fan Connector
6	Flame Detection Connector
7	Fuses 2A 230V (X2)
8	230V Connector
9	Auxillary 230V Connector
10	Actuators 230V Connector
11	Time Clock Connector (Internal)
12	Room Thermostat Connector
13	Remote Control Connector
14	Under Floor Heating Connector
15	Not Used

13. Electrical connections (continued)

- If a remote time clock is to be fitted, using a volt-free switching time clock, remove the link wire and connect the switching wires from the time clock following points above (see also **Diagram B Fig. 32**).
- If using an external time clock and room thermostat, remove the link wire and connect in series as above (see also **Diagram C Fig. 32**).

Live and Neutral connections to operate the clock motor must be taken from a suitable source.

Connector **11 (Fig. 31)**, is provided for connecting an optional integral time clock or programmer, for fitting instructions, please refer to those provided with the clock or page 8 of this manual.

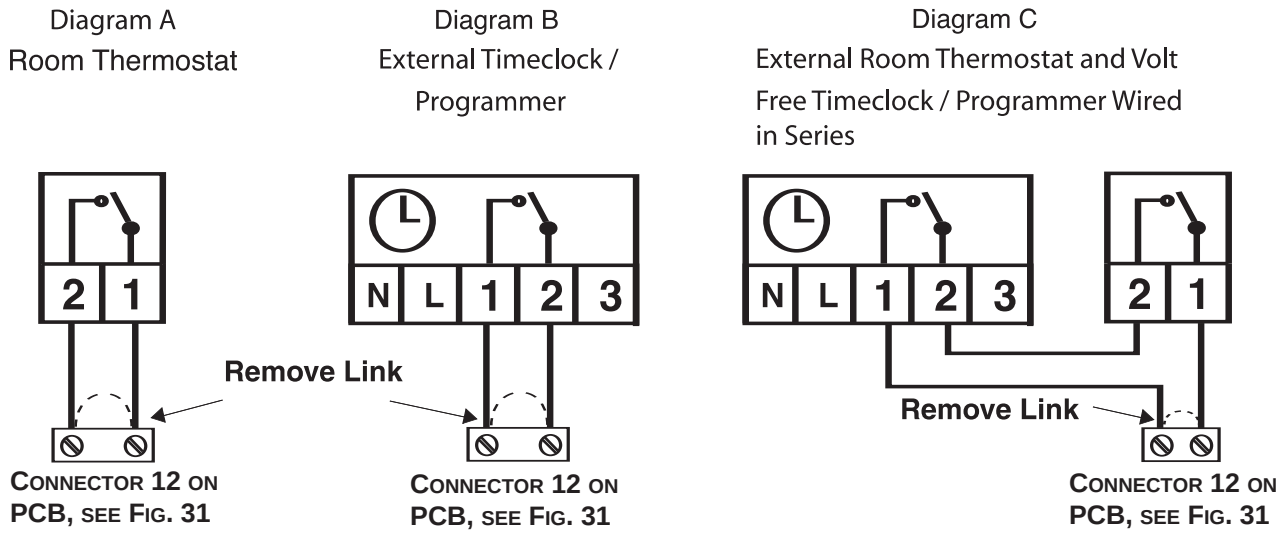

Ensure low voltage and high voltage circuits are cabled seperately to avoid induced voltages in the low voltage circuits

Timeclock and Room Thermostat low voltage compatible

Fig. 32

13. Electrical connections (continued)

13.1 Fitting the Digital Time Clocks

To fit the digital time clock it is necessary to proceed as follows; (this should only be carried out by a competent engineer)

- Isolate the electrical supply to the appliance;
- Remove the front panel as described in Section 18.1.1;
- Remove the plastic cover with the mecanical time clock on the right hand side (Fig. 33) and pull out the 4 wires (Fig. 34);
  NOTE: THE WIRES MAY BE TUCKED BEHIND THE ELECTRICAL COVER.
- Connect the time clock wires as follows;

Fig. 33

DIGITAL MODEL (Fig. 36)

Red Wire - Contact 1
Black Wire - Contact 2
Grey Wire - Contact 3

NOTE: SECOND BLACK WIRE IS NOT CONNECTED.

- Push the clock back into the panel and refit the casing panel (Fig. 37).

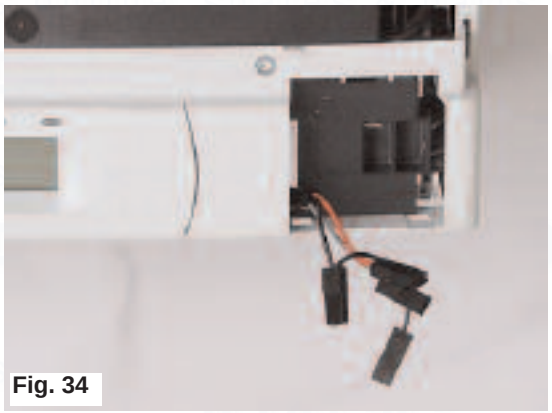

Fig. 34

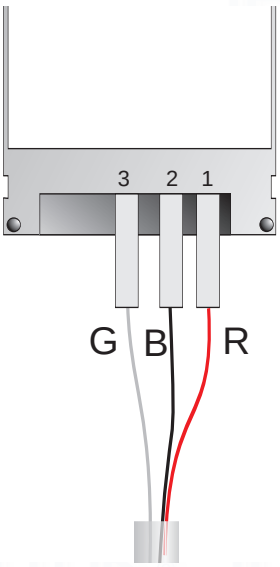

Fig. 36

Fig. 37

14. Commissioning and testing

14.1 Initial preparation

MTS (GB) Limited support the benchmark initiative. In Sections 24 and 25 (pages 60 and 61) of this manual the benchmark Commissioning Checklist and Service Interval Record can be found. It is important that this is completed in the presence of your customer, they are shown how to use it, and it is signed by them. Please instruct your customer that they must have this manual with them whenever they contact a service engineer or us.

Preliminary electrical system checks to ensure electrical safety must be carried out by a competent person i.e. polarity, earth continuity, resistance to earth and short circuit.

Filling the Heating System:
Remove the front casing panel and lower the control panel as described in Section 18.1 (page 41).
Open the central heating flow and return cocks supplied with the connection kit;
Unscrew the cap on the automatic air release valve one full turn and leave open permanently;
Close all air release valves on the central heating system;
Gradually open the valves at the filling point (filling loop) until water is heard to flow, do not open fully;
Open each air release tap starting with the lowest point and close them only when clear water free of air is visible;
Purge the air from the pump by unscrewing the pump plug anti-clockwise, also manually rotate the pump shaft in the direction indicated by the pump label to ensure the pump is free;
Refit the pump plug;
Continue filling the system until at least 1.5 bar registers on the pressure gauge;
Inspect the system for water soundness and remedy any leaks discovered.

Filling of the DHW System:
Close all hot water draw off taps;
Open the cold water inlet cock supplied with the connection kit;
Slowly open each draw off tap and close them only when clear water, free of bubbles, is visible.

Gas Supply:
Inspect the entire installation including the gas meter and test for soundness. The entire installation should be in accordance with the relevant standards. In GB this is BS 6891 and in IE this is the current edition of I.S.813.

The connection on the the appliance is a 15mm copper tail located at the rear of the gas service cock (**39 Fig. 2 - page 5**)

If the gas supply serves other appliances, ensure that an adequate supply is available both to the boiler and the other appliances when they are in use at the same time.

Pipe work must be of an adequate size. Pipes of less than 22mm should not be used.

Open the gas cock (supplied with the connection kit) to the appliance and check the gas connection on the appliance for leaks.

Water Treatment:
The boiler is equipped with a stainless steel heat exchanger.

The detailed recommendations for water treatment are given in BS 7593:1992 (Treatment of water in domestic hot water central heating systems); the following notes are given for general guidance;

If the boiler is installed on an existing system, any unsuitable additives must be removed;
Under no circumstances should the boiler be fired before the system has been thoroughly flushed; the flushing procedure must be in line with BS7593:1992.

Firstly fill the central heating system with the power off, and flush through cold, fill the central heating system again, adding a flushing detergent, run the boiler on central heating until it reaches its operating temperature and flush the system, refill the system with a suitable corrosion inhibitor,

Note: Failure to carry out the flushing procedure will result in the warranty becoming void.

The checks to be run before initial start-up are as follows:

14.2 Initial start-up

1. Make sure that:
   - The screw on the automatic air valve has been loosened when the system is full;
   - **CAUTION**: It is very important to fully bleed the main heat exchanger of air when filling the boiler.
   You must continue to bleed the heat exchanger from the manual vent **24** (on the top of the heat exchanger), and pump through the automatic air vent **18** fig.6, through several central heating and hot water cycles to ensure the air is fully bled from the system.
   Close the manual vent after bleeding.

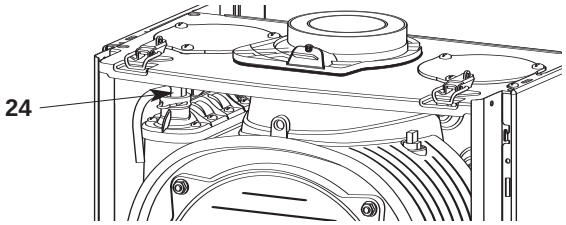

   - If the water pressure in the system is below 1.5 bar, bring it up to the appropriate level;
   - Ensure that the gas cock is closed;
   - Make sure that the electrical connection has been made properly and that the earth wire is connected to an efficient earthing system;
   - Supply power to the boiler by pushing the on/off button **27** (**Fig. 1**) the green led indicator light will illuminate;
   - Turn the central heating control knob **30** (**Fig. 1**) to maximum and switch the time clock (if fitted) to constant and turn up the room thermostat (where fitted);
   - After 7 seconds, the boiler will signal a shutdown due to ignition failure. Leave the boiler as it is until all the air has been bled from the system;
   - Loosen the cap on the head of the pump to eliminate any air pockets;
   - Repeat the procedure for bleeding the radiators of air;
   - Open the hot water taps for a short period;
   - Check the system pressure and , if it has dropped, open the filling loop again to bring the pressure back up to 1.5 bar;

14.3 Adjusting the CO_2

2. Make sure that all radiator valves are open;
3. Turn on the gas cock and check the seals on the connections with any approved soap solution and eliminate any leaks;
4. Press the reset button **29** (Fig. 1) the boiler will re-attempt ignition. If the burner does not light the first time, wait 1 minute and repeat the procedure;
5. Check the minimum and maximum CO_2 values and gas rates;- Adjust if necessary as indicated in Section 14.3 (page 29).

14.3 Adjusting the CO_2

1. Remove the casing panel as described in Section 18.1 (page 41);
2. Connect a manometer to the inlet test nipple on the gas valve, turn on a hot tap and ensure the inlet working pressure is 20mbar. If correct proceed as follows;
3. Turn on the combustion analyser, remove the combustion test point plug **Q** (Fig. 38) and insert the analyser probe into the test point;
4. Turn on a hot tap and ensure that the boiler is firing.
5. Access the setting menu by pressing the ⊕ and ⊖ keys for 5 seconds the icon will be shown in the display;
6. Press the menu button four times to access Menu 5 and press the setting button once to switch the output of the boiler to maximum (two digits will be flashing indicating the temperature of the boiler). There will be a cursor at the top of the display indicating the boiler is at maximum output. If the cursor is at the bottom of the display (indicating minimum output) press the button the change to maximum output;
7. If necessary adjust the screw on the gas valve (Fig. 39) to set the CO_2 to 8.9% +/- 0.2% (NG) or 9.7% +/- 0.2% (LPG);
8. Press the setting button once to set the combustion control rate mode to minimum, and, if necessary, adjust the screw on the gas valve to set the CO_2 to 8.9% +/- 0.2% (NG) or 9.7% +/- 0.2% (LPG);
9. Press the setting button again to set the combustion rate control mode to maximum and if necessary adjust the screw on the gas valve to set the CO_2 to 8.9% +/- 0.2% (NG) or 9.2% +/- 0.2% (LPG);
10. Reassemble in reverse order.

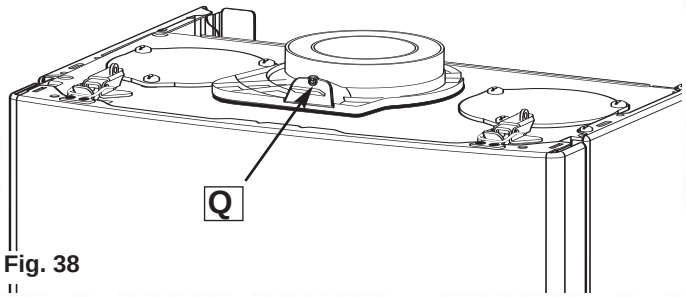

Fig. 38

14.4 Gas Conversion

To convert from Natural Gas (G20) to LPG (G31), it is necessary to insert a diaphragm and restrictor between the gas valve and air/gas arm.

Once the conversion has been made, the CO_2 setting will need to be checked as described in Section 14.3, for LPG the CO_2 reading should be 10% +/- 0.2% with the front case fitted).

To convert from LPG (G31) to Natural Gas (G20), it is necessary to remove the diaphragm and restrictor from between the gas valve and air/gas arm.
Once the conversion has been made, the CO_2 setting will need to be checked as described in Section 14.3, for NG the CO_2 reading should be 9.2% +/- 0.2% (with the front case fitted).

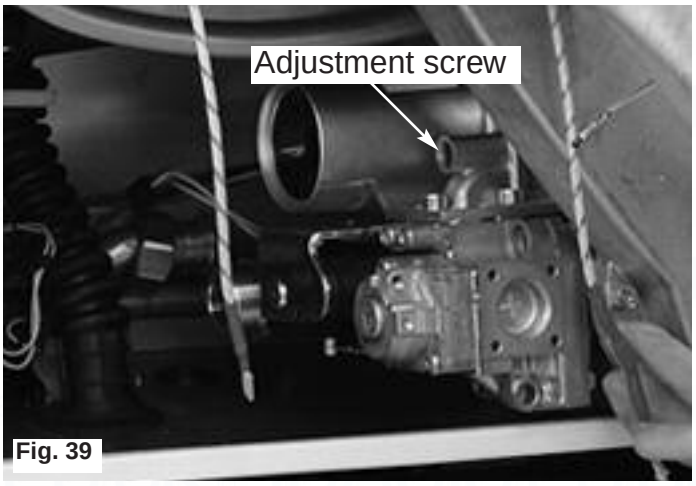

Fig. 39

14.5 Range rating the maximum heating power

To adjust the maximum heating power it is necessary to access the settings menu by pressing ⊕ the ⊖ and buttons together for five seconds, and proceed as follows;

1. Press the menu button 3 times to access Menu 4;
2. Press the ⊕ button to access Menu 4.9;
3. The value is adjustable between 0 and 10, 0 being the minimum output and 10 being the maximum, please refer to the chart on page 32 (Fig. 41) for the required setting;
4. The maximum central heating output can now be adjusted by pressing the setting button ;
5. To exit the setting mode, do not press any buttons for 1 minute, the boiler will automatically exit the Setting Menu.

14.6 Fitting the external sensor

The external sensor should be fitted 1.5 meters above the floor on a North to North West facing wall.

To connect the external sensor, it is first necessary to remove the casing panel as described in Section 18 (page 42);

Remove the PCB cover as described in Section 18.4 and connect the external sensor as described in Section 18.5 (page 50).

14.7 External sensor and ambient sensor set-up (where fitted)

N.B.
To ensure that these parameters are set correctly, consult the ***"thermo-regulation help"*** document enclosed with the documentation folder.

14.8 Completion

For the Republic of Ireland it is necessary to complete a "Declaration of Conformity" to indicate compliance to I.S.813. An example of this is given in the current edition of I.S.813. In addition it is necessary to complete the benchmark Commissioning Checklist in Section 24 of this manual (Page 60).

14.9 Operational checks

1. The system must be visually checked for soundness;
2. **Fill the condensate trap with water, by pouring ½ litre of water into the exhaust flue connector (see Fig. 40). N.B. In the event of a prolonged period of system shutdown, the condensate trap should be filled before any renewed use. A shortage of water in the trap could possibly lead to a temporary leakage of fumes into the air, until it refills itself;**
3. Ensure that the flue is fitted correctly;
4. Allow the central heating system to warm up and adjust the central heating temperature control knob **31** (Fig.1), check the burner modulates between the high and low settings;
5. Range rate the thermal power for central heating as detailed in Section 14.5. To adjust the maximum heating power it is necessary to follow the steps in Section 14.5 Menu 4. and adjust in relation to the chart on Page 31 (Fig. 41);
6. Check the gas rate;
7. Record the finding in the Benchmark Commissioning Checklist (Page 59);
8. Run the domestic hot water and adjust to the correct water flow rate, adjust the domestic hot water temperature control knob **30** (Fig.1) to ensure the burner modulates between the high and low settings;
9. Balance the central heating system until all return temperatures are correct and equal;
10. Turn the boiler off by pressing the On/Off button **27** (Fig.1) to OFF, disconnect the gas pressure gauge, retighten the screw and relight the boiler;
11. Re-examine the central heating, domestic hot water and old water supplies for soundness;
12. If external controls have been disconnected, reconnect and test;
13. Refit the boiler casing.

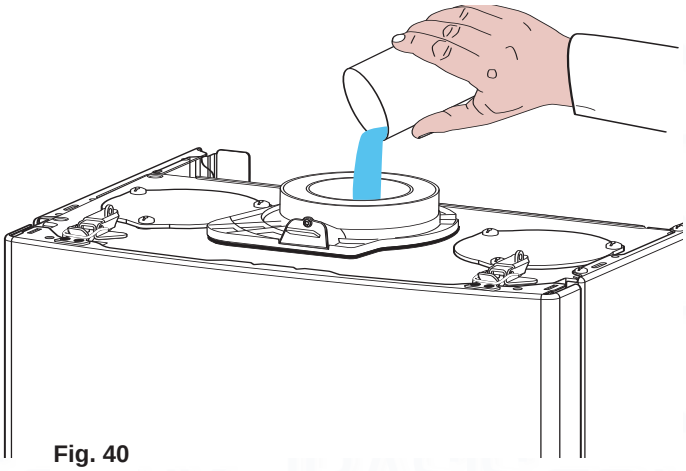

Fig. 40

14.10 Instructing the end user

1. Hand over these instructions and explain how to use the time clock and room thermostat (if fitted) and explain how to register the guarantee;

2. Show the end user how to switch the appliance off quickly, and indicate the position of the electric supply isolator;

3. Inform the end user of the location of all drains, isolating valves and air vents;

4. Explain how to turn the appliance off for both short and long periods and advise on the precautions necessary to prevent damage in the event that the appliance is inoperative when freezing conditions occur;

5. Instruct the end user on the correct procedure for checking and refilling the boiler;

6. Finally advise the end user that, for continued safe and efficient operation, the appliance must be serviced by a competent person at least once a year and the service logged in the Service Interval Record (Page 60).

Central Heating Output average (kW) (30/50°C)	24 kW	30 kW
	23	29
	21.2	26,8
	19.4	24,6
	17.6	22,4
	15.8	20,2
	14	18
	12.2	15,8
	10.4	13,6
	8.6	11,4
	6.8	9,2
	5	7

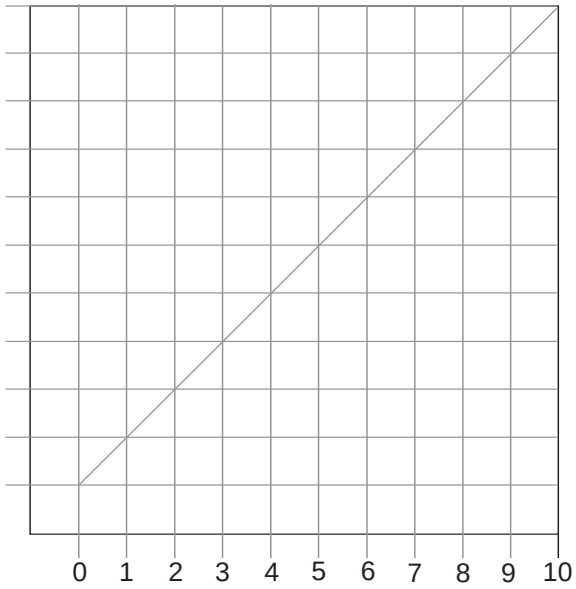

Steps (Value P min - P max - Menu 4)

Fig. 41

15. Fitting the casing

Fitting the casing

Remove the protective film on the casing:

- Locate the lower clips into the slots in the chassis
- Engage hooks **N** on the casing in notches **R** on the side panels **M** operation (Fig. 42)
- Fit the top of the panel in place
- Close the panel mounting clamps (Fig. 43)
- Screw in the two clamp locking bolts **A**

Note: it is essential to refit both locking bolts A

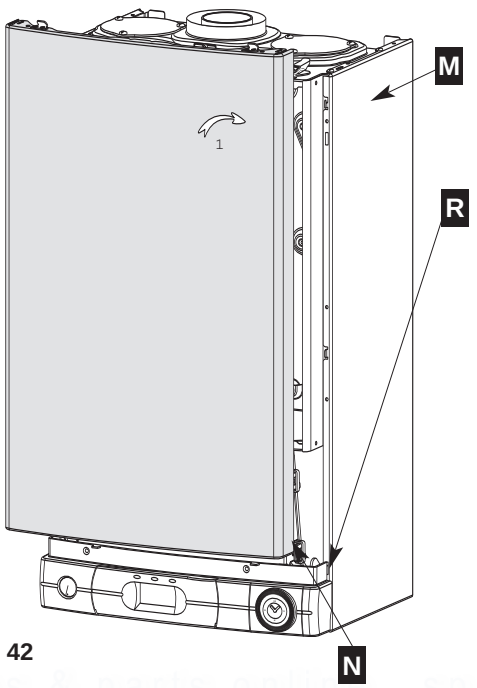

Fig. 42

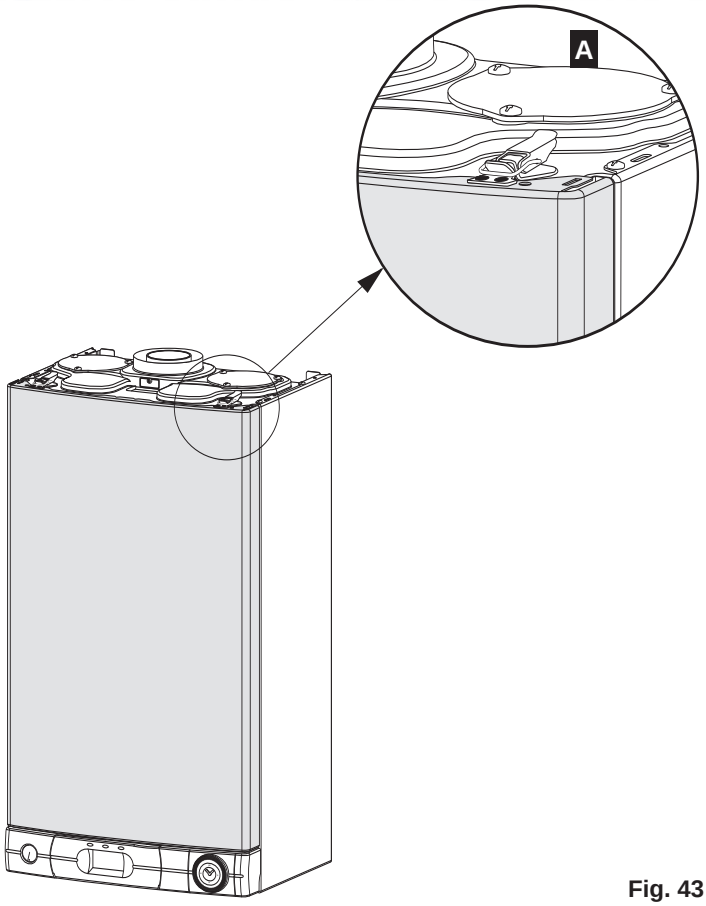

Fig. 43

16. Sequence of operation

16.1 Central Heating Mode

Activation of the time clock and/or room thermostat starts the boiler. The display panel indicates the flow temperature s in central heating as illustrated below:

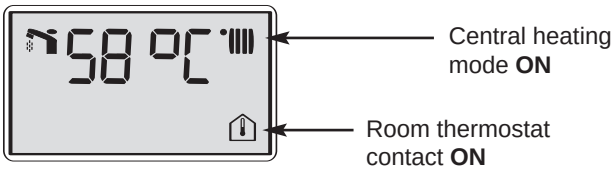

With the boiler in rest, the diverter valve is in the domestic hot water position, activation of the central heating changes the position of the motorised valve head, moving the diverter valve into the central heating position.

The start of the pump is delayed for 7 seconds to allow the movement of the diverter valve. The PCB checks the pressure of the primary circuit, if the pressure measured is 0.8 bar or lower, the boiler will lockout after 40 seconds. The error code **E02** will appear on the LCD and the pump will stop.

If the pressure measured is above 0.8 bar, the boiler ignition sequence will begin.

At first, the fan starts and the speed increases to the required ignition speed (3460 rpm), once this speed has been achieved, the safety coil of the gas valve is supplied with 230V DC, after 8 seconds the boiler checks that the burner has lit, if the boiler does not sense that the burner has lit, the error code **E04** will appear on the display, should this error occur, the boiler will attempt to relight two more times (20 seconds between each attempt). After this, should the boiler still not sense a flame, error code **A03** will appear on the LCD. Should the boiler detect that the burner has lit, the boiler continues to regulate as follows.

The NTC fitted on the outlet of the primary circuit exchanger is the only NTC to adjust the heat output of the boiler according to the adjustable setting point. This point is adjustable from 25°C to 85°C by the user. This NTC relays information to the PCB, which in turn modulates the burner by adjusting the speed of the fan.

When the NTC senses that the set temperature has been achieved (+ 4°C to the temperature set by the user), the burner will go out. To avoid excessive burner lighting, an anti-cycle timer can be set between 0 to 7 minutes in menu **4** line **48** (see Section 17 Adjustments and Settings).

The speed of the pump can be set at two levels. The PCB controls the speed of the circulation pump depending on the speed set in menu **4** line **41**. Setting **410** will cause the pump to operate continually at high speed, and setting **411** will cause the pump to modulate between high and low speed depending on the ΔT between the inlet and the outlet. If the ΔT is greater than 20°C the pump will run on high speed and if the ΔT is less than 20°C the pump will run on low speed.

NOTE: THE DEFAULT SETTING FOR THE PUMP IS HIGH SPEED.

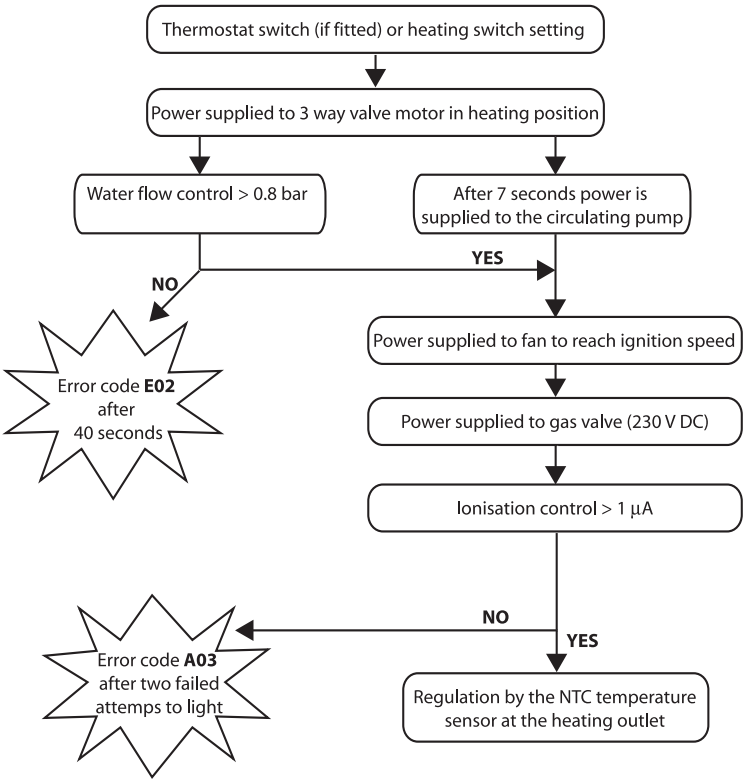

16. Sequence of operation

16.2 Domestic Hot Water Mode

The Domestic Hot Water (DHW) production always has priority over the Central Heating (CH) mode.

When a hot tap is turned on, the DHW flow switch is activated. The minimum DHW flow rate is 2 l/min. If the diverter valve is in the CH position it will motor into the DHW position and the boiler will start.

The LCD will show that the boiler is working in hot water mode as below:

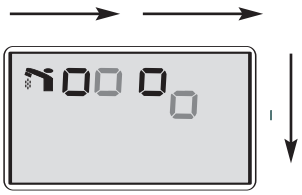

The appliance follows the same operating logic as described in Section 16.1 Central Heating Mode.

In domestic hot water mode NTC1 limits the maximum temperature of the primary heating circuit to 78°C during DHW production, re-ignition will occur at 74°C. The domestic hot water temperature is limited to 64°C, re-ignition will occur at 62°C.

The NTC at the end of the plate heat exchanger is the only NTC used for the regulation according to the DHW setting.

The DHW setting is adjustable from 40°C to 60°C by the user.

The PCB compares the values of the DHW NTC with the setting of the DHW control knob. If the temperature of the DHW NTC is 4°C greater than the temperature set on the DHW control knob, the burner will go off, it will restart when the temperature of the DHW NTC is less than + 2°C of the temperature set on the DHW control knob.

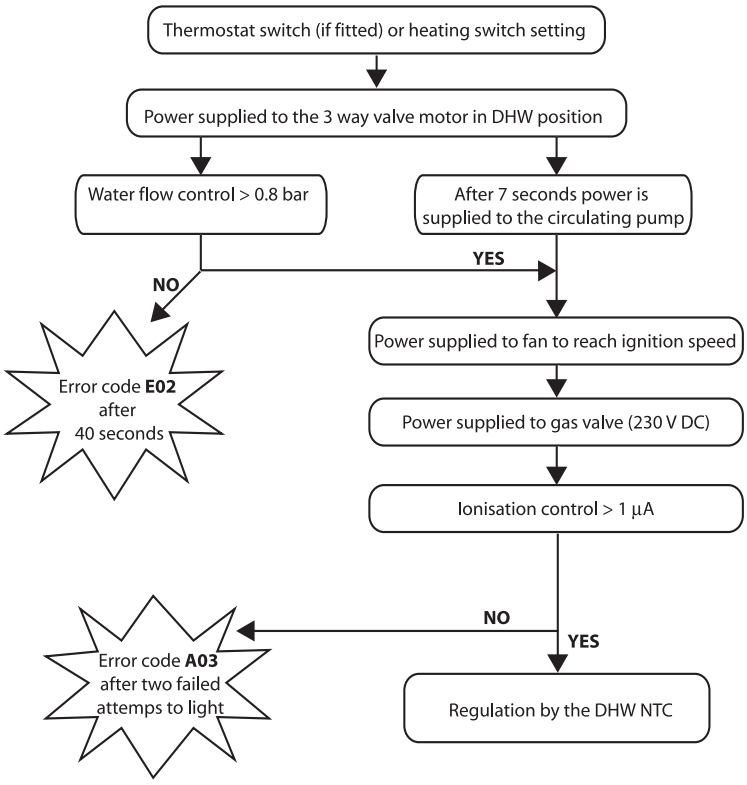

17. Adjustments and settings

The boiler is delivered with pre-set values described in menus 3 and 4.
All settings must only be changed by the installer or a qualified person. To gain access to the setting buttons please, open the front control panel cover **P**. and follow the instructions below.

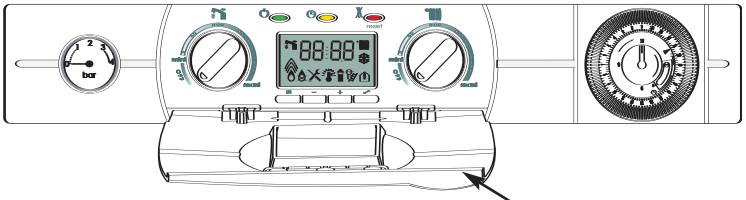

P

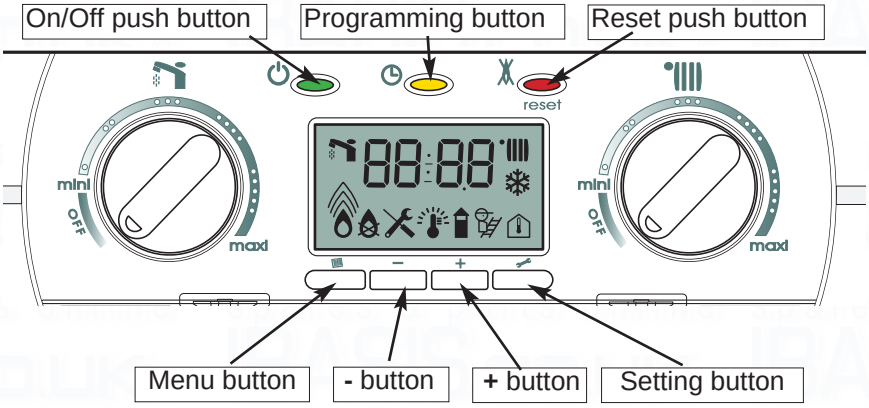

Fig. 44

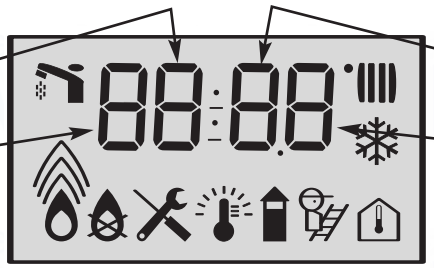

Pressing the, comfort, reset, menu, +, -, or setting buttons will make the display light. The light will go out 30 seconds after the last button has been pressed.

To gain access to the setting menus press (+) and (−) buttons together for 5 seconds. (Fig. 44). Menu 1 is displayed on the 1st digit.

Changing the menu **:**

Press the Menu button (Fig.44). The menu number is displayed for 3 seconds. Press the menu button to change to the next menu

Setting a parameter in a section **:**

Press the (+) or (−) button to change from between sections.

Note : When you arrive at the last section of a menu, pressing the (+) button will change to the the 1st section. When you are at the first section, pressing the (−) button will change to the last section of the menu.

Changing section in a menu (available only for menu 3,4,5 and 6) :

Press the setting button to enter the modification mode, The 3rd and 4th digits will be flashing, press the (+) or (−) button to select the correct value then press the setting button to select this modification and to exit the setting mode. The 3rd and 4th digit stop flashing.

Recalling the basic configuration **:**

Select menu **3,4,5** or **6** then press the (+) and (−) buttons together for more than 5 seconds. The digits will flash **CM** for a while to indicate that the operation is completed.

Clearing Menu 1 (default register) **:**

Select menu **1** then press the (+) and (−) buttons together for more than 5 seconds. The digits will flash **CM** for a while to indicate that the operation is completed.

Note : *To exit install mode, press the* **Menu** button *for at least 3s. If no button is pressed for about 1 minute, the display returns to user mode.*

ACTION	CONFIGURATION	DISPLAY

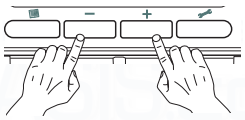

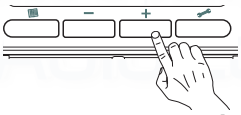

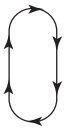

Menu - 1 - Default register

Record of the last 10 faults

Section	Digit 1	Digit 2	Digit 3 and 4	DISPLAY
Last fault occured	1	0	code from **01** to **99**	10 --
Last but one fault occurred	1	1	code from **01** to **99**	11 --
...	1	...	code from **01** to **99**	
Last fault occurred before the previous one	1	9	code from **01** to **99**	19 --

Note **--** is displayed if no fault is recorded

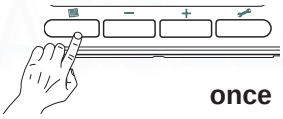

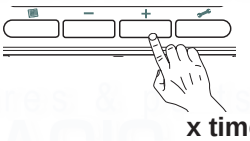

Menu - 2 - Boiler conditions

Indicates the conditions or the configurations of the boiler

Section	Digit 1	Digit 2	Digit 3 and 4	DISPLAY
Software version of display PCB	2	0	code from **01** to **99**	20 --
Software version of main PCB	2	1	code from **01** to **99**	21 --
Flue type	2	2	**4** : Condensation	22 4
Fan speed (in hundreds of rpm)	2	3	from **01** to **99**	23 0
Theoretical position of the 3 way valve	2	4	**0** : DHW **1** : CH	24 0 24 1
DHW flow temperature in °C	2	5	from **01** to **99**	25 --
CH flow temperature in °C	2	7	from **01** to **99**	27 --
CH return temperature in °C	2	8	from **01** to **99**	28 --
Outside temperature in °C	2	9	from **01** to **99**	29 --

ACTION | CONFIGURATION | DISPLAY

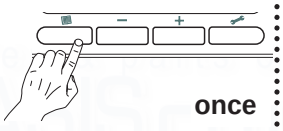

once

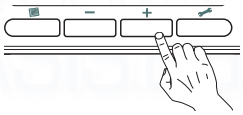

x times

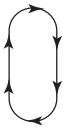

Menu - 3 - Boiler options

Rubrique	Elément 1	Elément 2	Elément 3 et 4	DISPLAY	Factory setting
Inactive	3	0	--		
DHW thermostatic kit fitted to boiler? (fix DHW temp to 65°C)	3	1	**0** : non **1** : oui	31 0 31 1	✓
Optional programmer action	3	2	**0**: on heating and reheating of exchanger **1**: on reheating of exchanger **2**: on the heating	32 0 32 1 32 2	✓
Inactive	3	3	--		
Inactive	3	4	--		
DHW Delay (time before CH relight after a DHW cycle)	3	5	**0** to **5** mn by step 0,5 mn	35 3.0	✓
DHW flow switch Delay (time before DHW flow detection to override pressure peak problem)	3	6	**0** to **20** 1/10 second	36 0	✓
Inactive	3	7	--		

ACTION | CONFIGURATION | DISPLAY

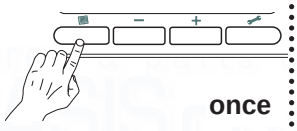

once

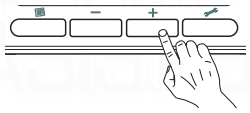

x times

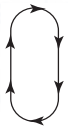

Menu - 4 - Boiler settings

Section	Digit 1	Digit 2	Digit 3 and 4	DISPLAY	Factory setting
Stop pump after burner stops	4	0	**0** : no **1** : yes	40 0 40 1	✓
Pump speed	4	1	**0** : High speed **1** : Adaptive	41 0 41 1	✓
Pump post circulation duration	4	2	**0** to **5** min by step 0.5 min	42 10	✓
Inactive	4	3			
Maximum Central Heating flow temperature	4	4	**50°** to **85°** by steps of 1°	44 80	✓
Minimum Central Heating flow temperature	4	5	**25°** to **50°** by steps of 1°	45 25	✓
Inactive	4	6			
Inactive	4	7			
CH anti-cycling delay	4	8	**0** to **7** min by step 0.5 min	48 2.5	✓
CH maximum output (range rating)	4	9	Value from **0** to **10** Pmin & Pnominal	49 06	✓

ACTION	CONFIGURATION		DISPLAY

Menu - 5 - Combustion rate control mode (test mode)

	Effect	Display	
once	Combustion rate control mode OFF		5---
once	Combustion rate control mode ON	The main exchanger temperature appears on the display. The digit - on the display shows the gas output level. (Top = max, bottom = min).	5_70
x times	Gas output setting	To modify the gas output use the **+** and **-** buttons.	5 70
	To cancel the combustion rate control mode press the “Menu” button.		

The combustion rate control mode will be inactive when :

- boiler is in stand by mode
- heating mode with room thermostat and initial heating temperature reaches max. heating recommendation
- boiler in lockout mode
- after the default settings have been restored or if the main supply fails (power cut)
- if the operator exits the 5th menu
- after 5 minutes if no buttons are pressed

Note : As soon as the combustion rate control mode is active, the Central Heating and Domestic Hot Water control knobs become inactive.

ACTION	CONFIGURATION	DISPLAY

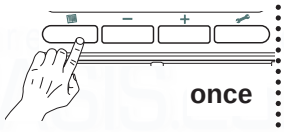

once

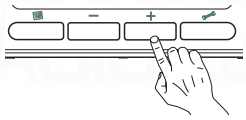

x times

Menu - 6 - Thermo-regulation settings

Section	Digit 1	Digit 2	Digit 3 and 4	DISPLAY	Factory setting
Type of control	6	0	**0**: Heating setting can be adjusted by the user **1**: Variable heating setting depending on the external temperature **2**: Variable heating setting depending on the room temperature (Clima Manager)***** **3**: Variable heating setting depending on the external and room temperatures (Clima Manager)*****	60 0 60 1 60 2 60 3	✓
Compensation	6	1	**If** 60 2 **or** 60 3 00 to 20 in intervals of 1	61 10	✓
Slope	6	2	**If** 60 1 **or** 60 3 0.3 0.5 1.0 1.2 1.5 2.0 2.5 3.0	62 10	✓
Parallel shift	6	3	**If** 60 1 **or** 60 3 from - **20** to **20** in intervals of 1	63 0	✓
Inactive	6	4	--		
Inactive	6	5	0		
Inactive	6	6	--		
Inactive	6	7	--		
Inactive	6	8	--		
Inactive	6	9	--		

*** Available only with Clima Manager**

N.B.
To ensure that these parameters are set correctly, consult the ***"thermo-regulation help"*** document enclosed with the documentation folder.

17. Adjustments and settings (continued)

CH anti cycling delay setting :

If you would like to change the setting of CH anti cycling delay, if you want 3 min, proceed as follows:
(NOTE : THE FACTORY SETTING IS 2 MIN 30 SECONDS AND THE FOLLOWING EXPLANATION REFER TO MENU 4 SECTION 8)

Display

1 Switch to installer mode, press button (+) and (−) for 5 seconds, the display shows :**10**=**0** if there is no default in the default register.

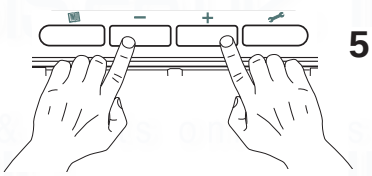

2 Press 3 times on menu button to gain access to menu *4,* the display shows : **40**=**0** or **40**=**1**

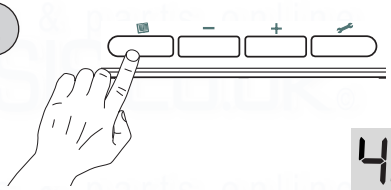

or

3 Change to section 8 (CH anti cycling delay), press on button (+) 8 times, the display shows :***48***=***2.5*** (factory setting 2 min 30 seconds)
4 = menu 4
8 = section 8
2.5 = 2.5 min (2 min 30 seconds)

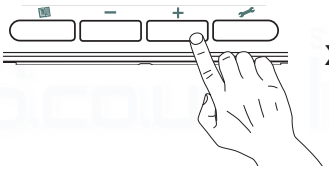

4 Press the setting button one time, the 3rd and 4th digits flash together, Then press the (+) to change the CH anti cycling delay, the display shows :
48=***3.0*** press the setting button to confirm the value. The display stops flashing.
Setting procedure is finished.
To exit from setting mode, leave the boiler for approx. 1 minute then the PCB will switch back to user mode.
After programming please close the front control panel cover **P** (Fig. 46 page 35)

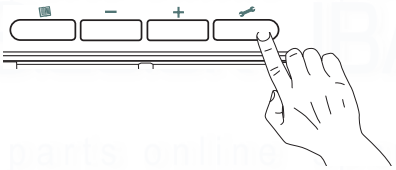

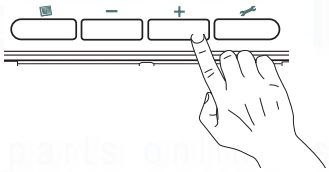

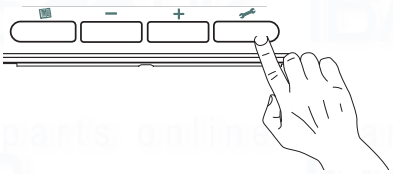

To ensure efficient safe operation, it is recommended that the boiler is serviced annually by a competent person, refer to Section 20 (page 53) for the Servicing Schedule.

Before starting any servicing work, ensure both the gas and electrical supplies to the boiler are isolated and the boiler is cool.
Before and after servicing, a combustion analysis should be made via the flue sampling point.

After servicing, preliminary electrical system checks must be carried out to ensure electrical safety (i.e. polarity, earth continuity, resistance to earth and short circuit).

IMPORTANT!
AFTER AN ANNUAL SERVICE, THE SERVICE INTERVAL RECORD (SECTION 25, PAGE 60) MUST BE COMPLETED.

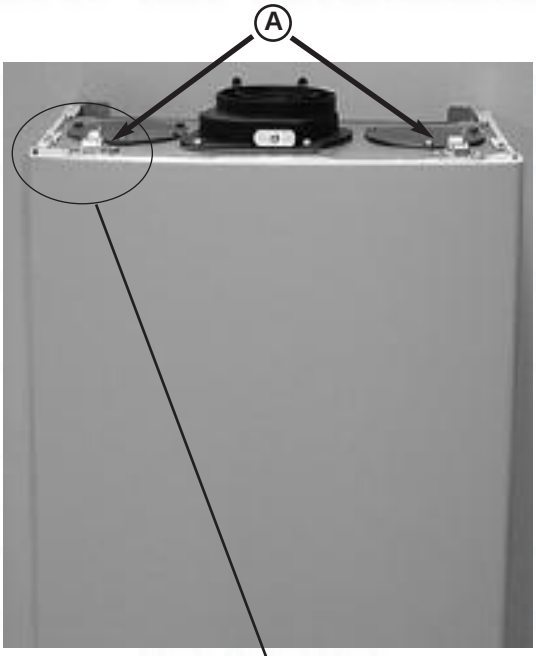

Fig. 45

18. Replacement of parts

The life of individual components vary and they will need servicing or replacing as and when faults develop.
The fault finding sequence chart in **Section 19** will help to locate which component is the cause of any malfunction, and instructions for removal, inspection and replacement of the individual parts are given in the following pages.

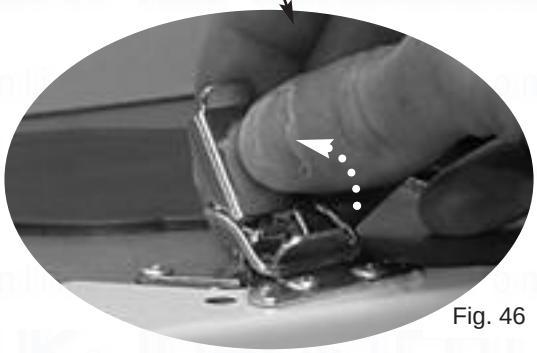
Fig. 46

18.1 To Gain General Access

All testing and maintenance operations on the boiler require the control panel to be lowered. This will also require the removal of the casing.

18.1.1 Removing the front panel :

1. Remove the security screw and unlock the two case locking catches **A** *(see Figs. 45 & 46)*;

2. Remove the front panel from the rest of the casing *(see Fig. 47)*.

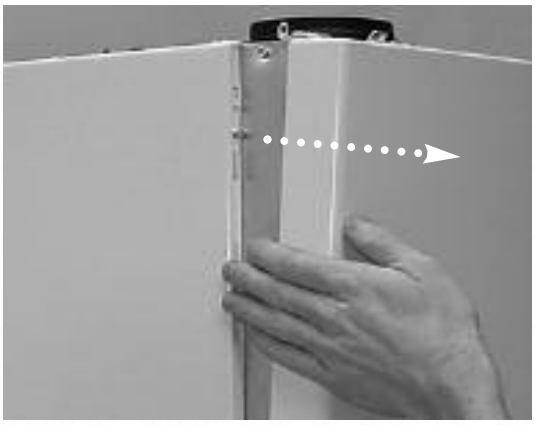
Fig. 47

18.1.2 Lowering the control panel :

1. Remove the front panel;

2. Unlock the two clamps locking and pivot the electrical box downward *(see Fig. 48)*.

Fig. 48

18.2 Access to the Combustion Chamber

18.2.1 Removing the air gas assembly

1. *I*solate the gas supply to the boiler;
2. Carry out step **18.1.1**;
3. Remove the silencer (Fig. 49)*;*

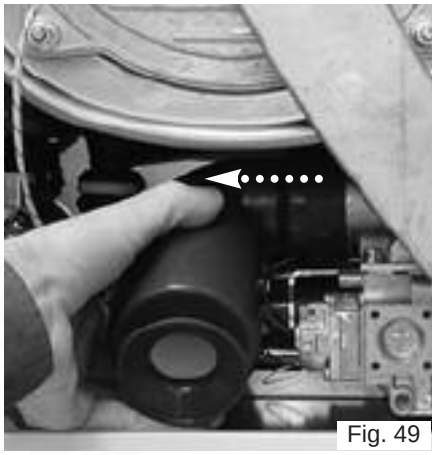
Fig. 49

4. Disconnect the detection electrode cable (Fig. 50);

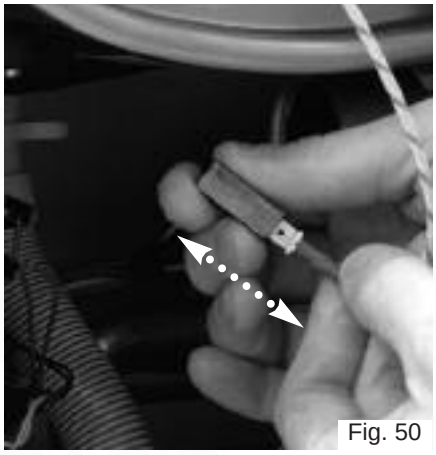
Fig. 50

5. Remove the earth cable from the ignition electrode (Fig. 51), and remove the ignition electrode cable from the ignitor (Fig. 52)

Fig. 51

Fig. 52

6. Unplug the gas valve and fan connectors (Figs. 53 and 54);

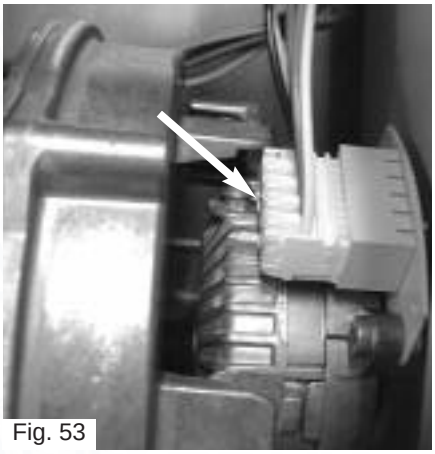
Fig. 53

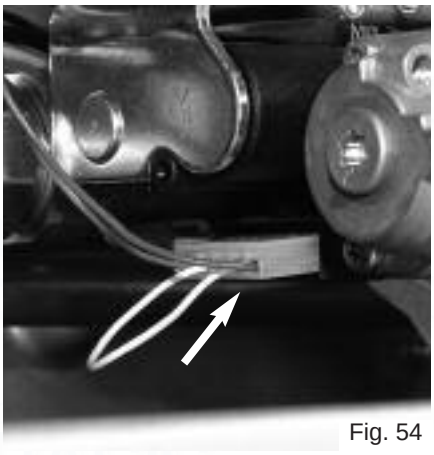
Fig. 54

7. Unscrew the 4 nuts **D** on the combustion chamber (Fig. 55);

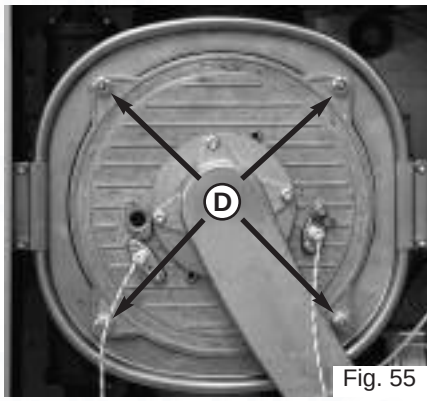

Fig. 55

8. Unscrew the gas valve nut **E** (Fig. 56);

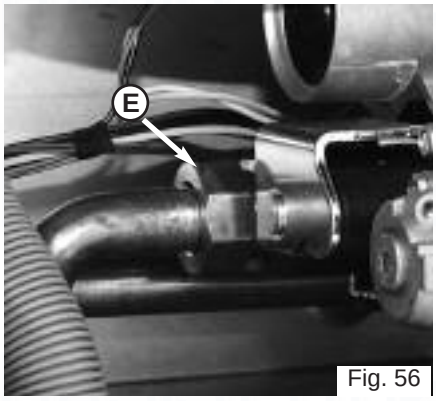

Fig. 56

9. Remove the air gas assembly and combustion chamber front (Fig. 57);
10. Reassemble in reverse order.

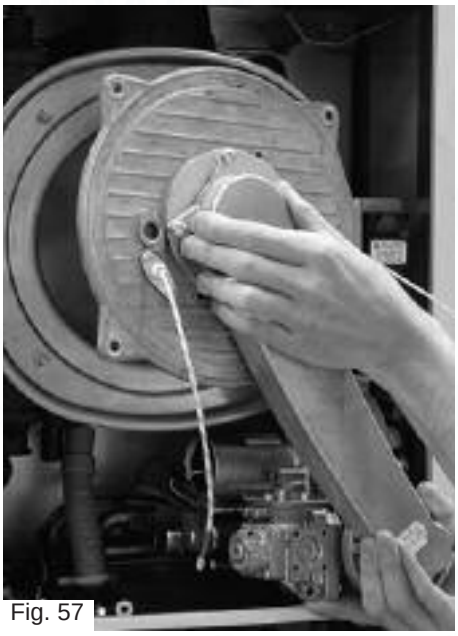
Fig. 57

18.2.2 Removing the burner

Do not remove the burner unless absoluly necessary.

1. Carry out step ***18.1.1*** and ***18.2.1*** (without removing the 4 nuts D);
2. Remove the 3 screws **F** from the air/gas manifold (Fig. 58);

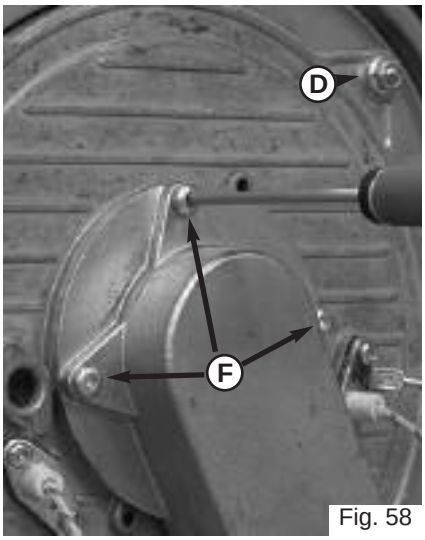

Fig. 58

3. Slide the burner out from the front, taking care not to damage the insulation (Fig. 59a 24 kW & 59b 30 kW);

Fig. 59a

Fig. 59b

4. Reassemble in reverse order and checking all seals are undamaged and the burner is positioned correctly (Fig. 60).
If necessary, replace the insulation too.

Fig. 60

18.2.3 Removing the detection electrode

1. Carry out step ***18.1.1***;
2. Disconnect the detection electrode cable (Fig. 61);

Fig. 61

3. Remove the 2 screws **G** from the electrode manifold (Fig. 62);

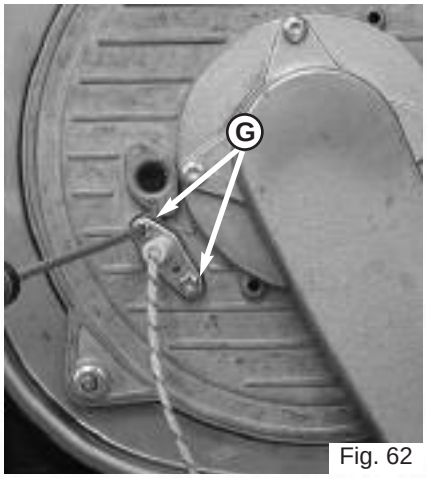

Fig. 62

4. Pull the electrode from the combustion chamber (Fig. 63);
5. Reassemble in reverse order.

Fig. 63

18.2.4 Removing the ignition electrode

1. Carry out step ***18.1.1***;
2. Remove the earth cable from the electrode (Fig. 64);

Fig. 64

3. Remove the electrode cable **H** from the ignitor (Fig. 65);

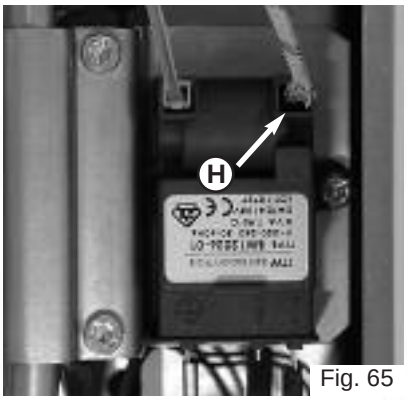

Fig. 65

4. Unscrew the 2 screws **I** on the electrode (Fig. 66);

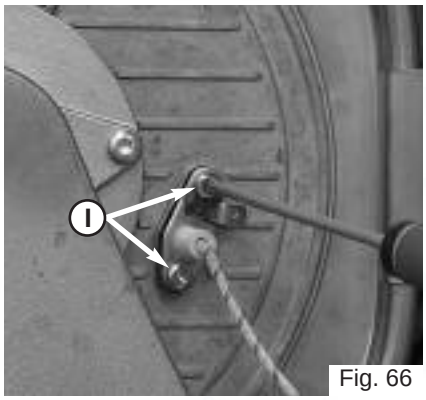

Fig. 66

18.2.5 Removing the fan

1. Carry out step ***18.1.1***;
2. Remove the air gas manifold as in step ***18.2.1*** (Fig. 67);

Fig. 67

3. Unscrew the two screws from the venturi **J** and remove with the gas valve (Fig. 68);

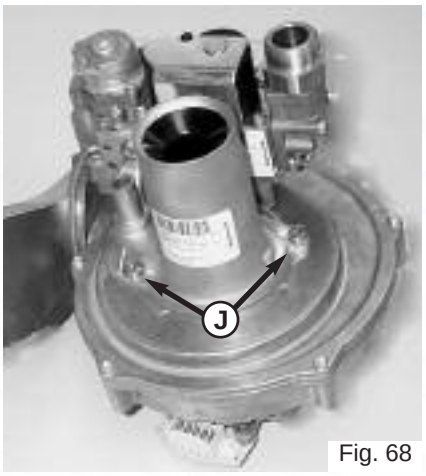

Fig. 68

4. Unscrew the three screws **K** on the air/gas pipe and remove (Fig. 69);
5. Reassemble in reverse order.

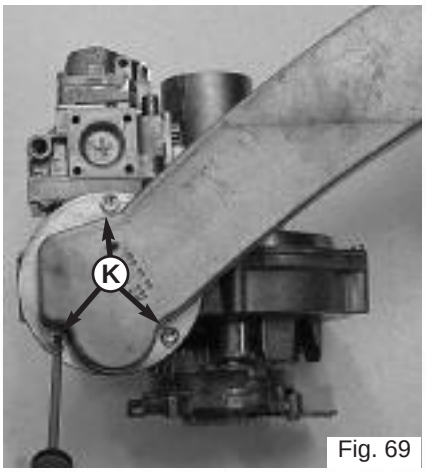

Fig. 69

18.2.6 Removing the gas valve

1. Carry out step ***18.1.1***;
2. Remove the air gas manifold as in ***18.2.1*** (Fig. 70);

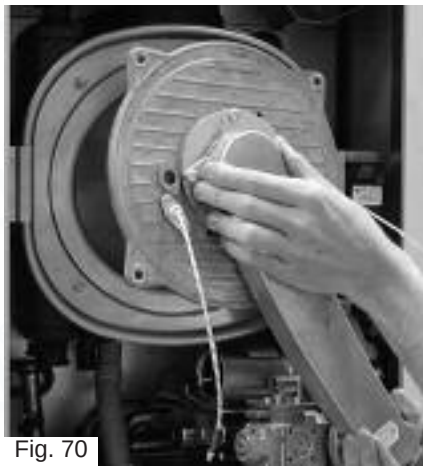

Fig. 70

3. Unscrew the three screws **L** on the air/gas pipe and remove (Fig. 71);

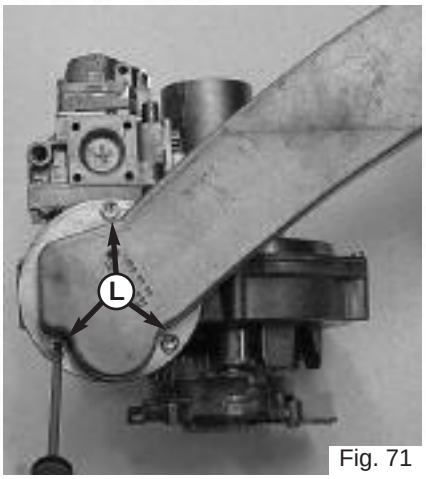

Fig. 71

4. Unscrew the three screws holding the gas valve on the venturi (Fig. 72);

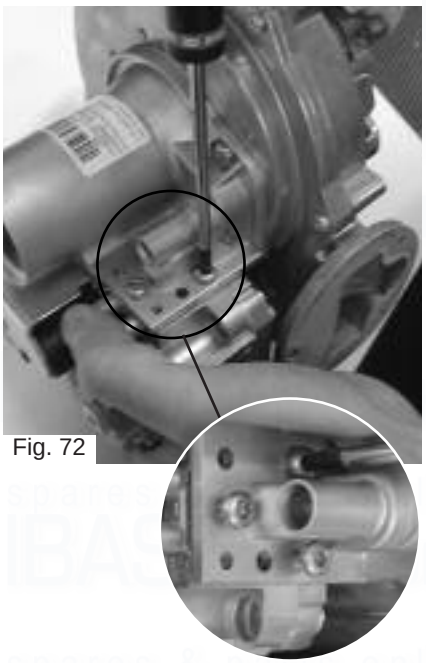

Fig. 72

5. Remove the gas valve from the venturi. (Fig. 73);
6. Reassemble in reverse order;
7. The gas valve settings will need to be adjusted (see Section 14.3 page 28);
8. Reinstate the gas supply and test for tightness on reassembly.

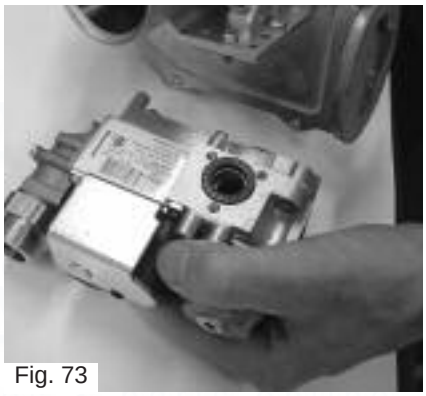

Fig. 73

18.2.7 Removing the heat exchanger

1. Carry out step ***18.1.1***;
2. Remove the air gas manifiold as in ***18.2.1*** (Fig. 74);

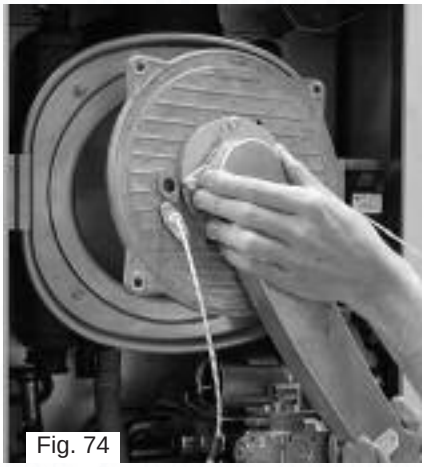
Fig. 74

3. Remove the flow pipe clip and unscrew the pump nut (Fig. 75a & 75b);

Fig. 75a

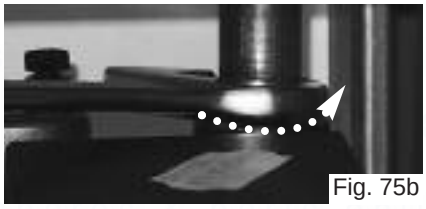
Fig. 75b

4. Remove the flow and return pipes and the condense drain pipe from the heat exchanger. (Fig. 75c);

Fig. 75c

5. Remove the two bolts securing the exchanger (Fig. 76);

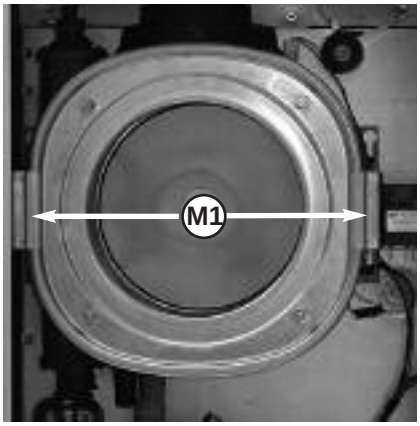

Fig. 76

6. Remove the screw **M2**; then rotate clockwise the bearing frame (Fig. 77);

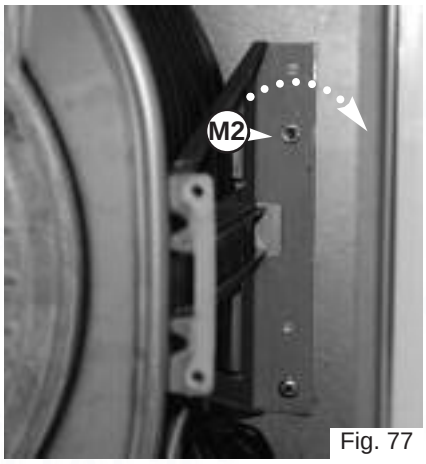

Fig. 77

7. Remove the heat exchanger by slightly rotating. (Fig. 78);
8. Reassemble in reverse order.

Fig. 78

18.2.8 Removing the spark generator

1. Carry out step ***18.1.1***;
2. Disconnect the ignition electrode, live, neutral and earth cables from the ignitor (Fig. 79);

Fig. 79

3. Remove the screw **N** from the ignitor and remove (Fig. 80);
4. Reassemble in reverse order.

Fig. 80

18.3 Access to the Water Circuit

Important! **Before any component is removed, the boiler must be drained of all water.**

18.3.1 Drain down

DHW : close the DHW inlet tap and open a tap on the installation / **CH** : Close the flow and return isolating valve and open the pressure relief valve.

18.3.2 Removing the 3 way valve

1. Carry out steps ***18.1.1*** and ***18.1.2***;
2. Disconnect the flow switch reed relay "**P1**";
3. Remove the clip "**P2**" and the 3 way valve motor *(see Figs. 81 and 82)*;
4. Remove the clips "**Q1**" "**Q2**" "**Q3**" "**Q4**" *(see Figs. 83 to 84)* and the two screws "**P3**" (Fig. 86);
5. Remove the 3 way valve body by pulling it toward you *(see Fig. 87)*;
6. Reassemble in reverse order;

* **See the paragraph 18.3.1 before removing the clips.**

Fig. 82

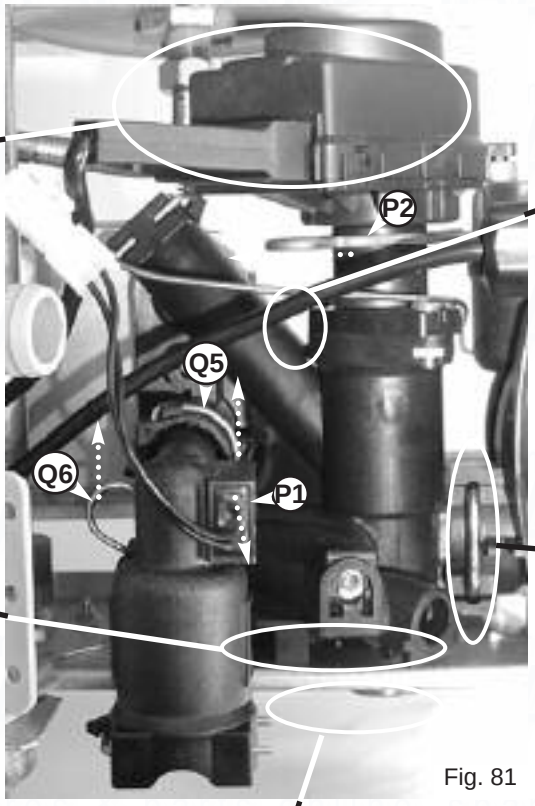

Fig. 81

Fig. 85

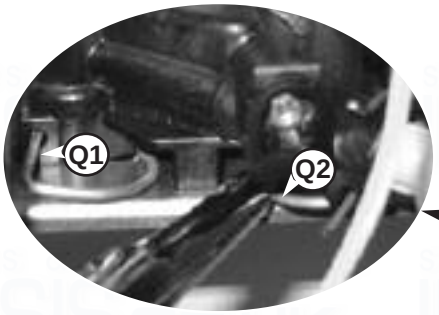

Fig. 83

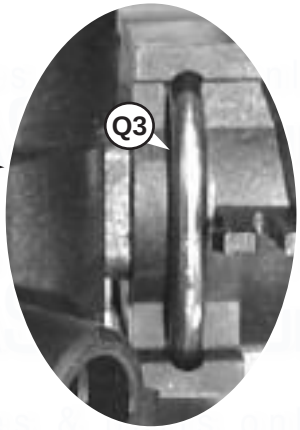

Fig. 84

Fig. 87

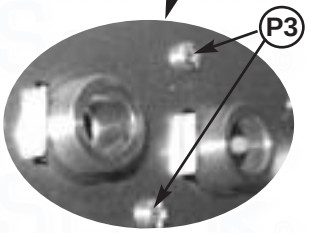

Fig. 86

18.3.3 Removing the float of the flow switch

1. Disconnect the flow switch reed relay "**P1**" *(see Fig. 81)*;
2. Remove the clips "**Q5**" and "**Q6**" *(see Fig. 81)*;;
3. Remove the clip "**Q5**" *(see Figs. 88 & 89);*
4. Pull down the cap and catch the float *(see Figs. 88 & 89);*
5. Reassemble in reverse order;

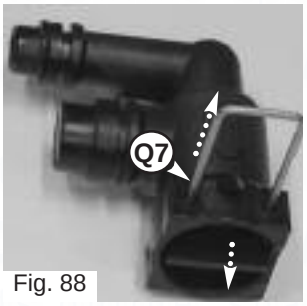

Fig. 88

Fig. 89

18.3.4 Removing the secondary heat exchanger

1. Carry out step ***18.1.1*** and ***18.1.2***;
2. Remove the 3 way valve motor as in step ***18.3.2***;
3. Disconnect the expansion vessel pipe.
4. Unscrew the two fixing screws **R** (see Figs. 90);
5. Unscrew the two fixing screws **R** and pull the heat exchanger toward you (see Figs. 90 & 91);
6. Reassemble in reverse order;
   The heat exchanger is so designed that it cannot be remounted incorrectly;

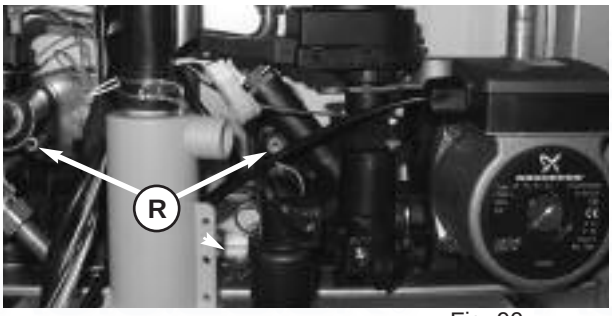

Fig. 90

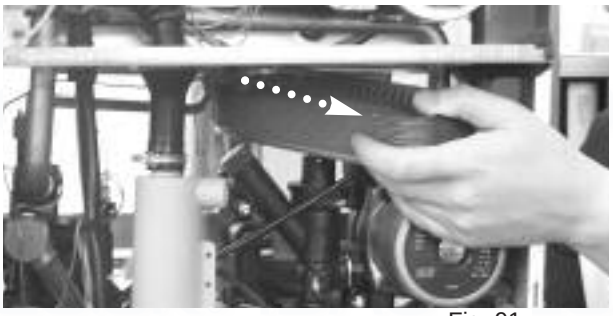
Fig. 91

18.3.5 Removing the pump

1. Carry out step ***18.1.1***;
2. Lower the electrical box cover as in step ***18.1.2;***
3. Remove the PCB cover as in step ***18.4.1***;
4. Remove the pump plug from the control board and earth plug from earth socket (see Fig. 92);
5. Unscrew the pump nut (see Fig. 93);

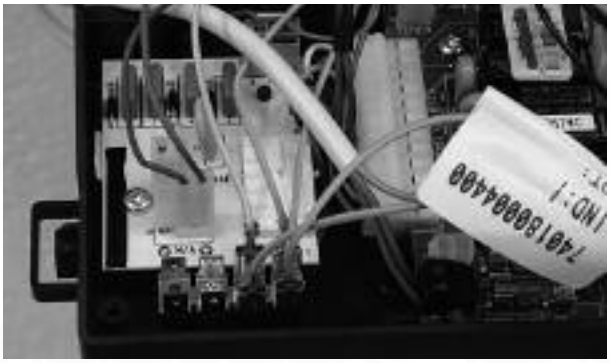
Fig. 92

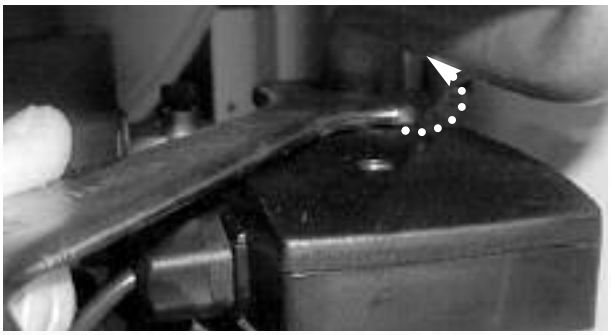
Fig. 93

6. Remove the clip **S2** on the pump volute (see Fig. 94);
7. Pull the pump toward you and remove the clip **S3** securing the pressure gauge (see Fig. 95);
8. Reassemble in reverse order.

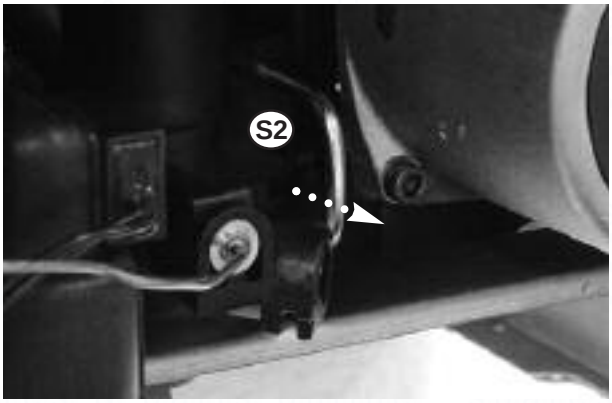

Fig. 94

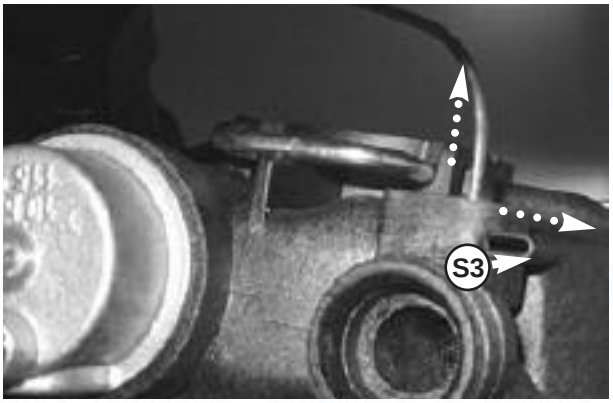

Fig. 95

18.3.6 Removing the pressure relief valve

1. Carry out step ***18.1.1*** and ***18.3.1***;
2. Remove the clip securing the valve (see Fig. 96) and pull it toward you;
3. Reassemble in reverse order; take care to ensure the valve is in the correct position;

Fig. 96

18.3.7 Removing the expansion vessel

1. Carry out step 18.3.1;
2. Isolate the gas supply and disconnect all pipe connections;
3. Remove the boiler from the wall
4. Unscrew the nut **U** (see Fig. 97);
5. Pull the expansion vessel to remove it (see Fig. 98);
6. Reassemble in reverse order.

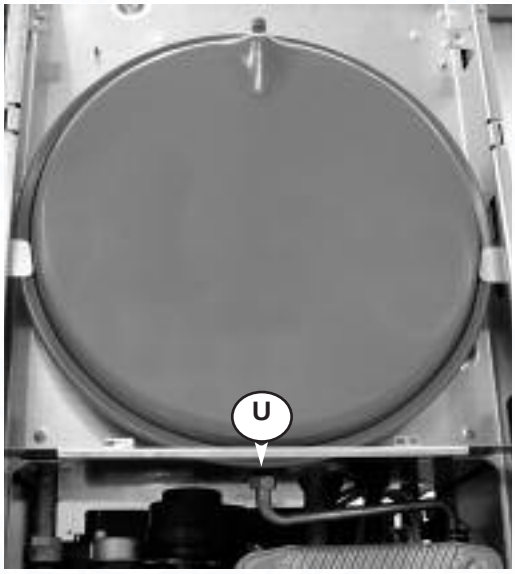

Fig. 97

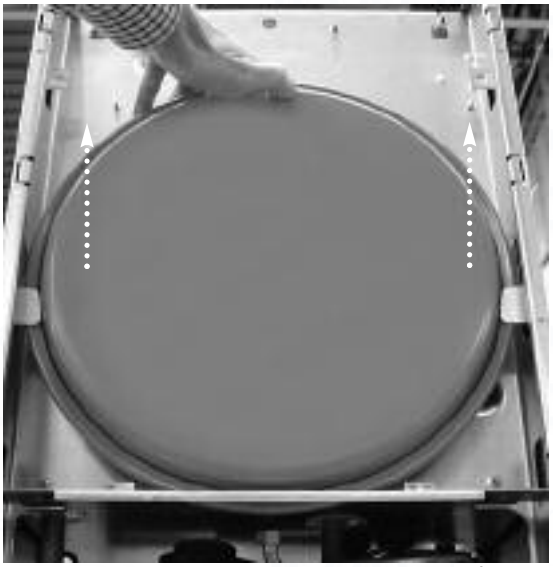

Fig. 98

18.3.8 Removing the overheat thermostat

1. Remove the casing as in step **18.1.1**;
2. Pull off the connections. Then remove the thermostat from the pipe by releasing it's securing clip (see Fig. 99).

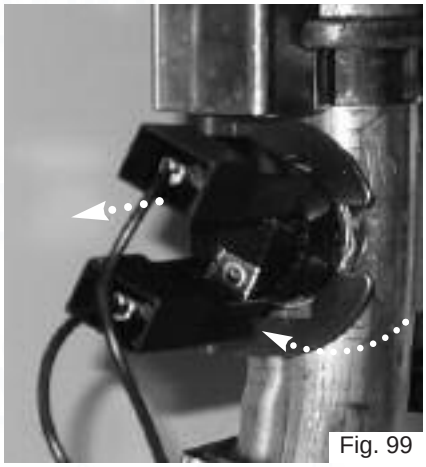

Fig. 99

18.3.9 Removing the temperature sensors (N.T.C's)

1. Remove the casing as in step **18.1.1**;
2. Pull off the NTC connections. Then remove the NTC from the pipe by releasing it's securing clip (see Fig. 100).

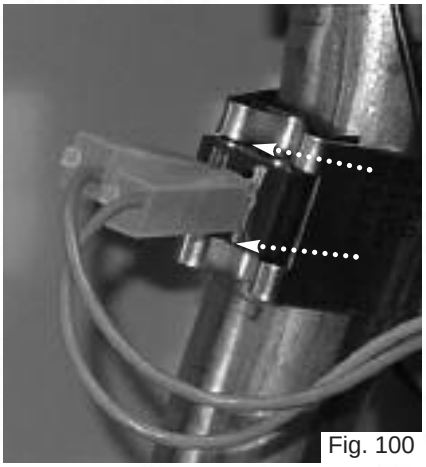

Fig. 100

18.3.10 Removing DHW sensor

1. Remove the casing as in step **18.1.1**;
2. Pull off the sensor connections. Then remove it by releasing it's clip (see Fig. 101).

Fig. 101

18.3.11 Removing the pressure gauge

1. Carry out steps ***18.1.1 and 18.3.1***;
2. Remove the pressure gauge by releasing the two clips **V** and pulling the pressure gauge out. (see Fig. 101)

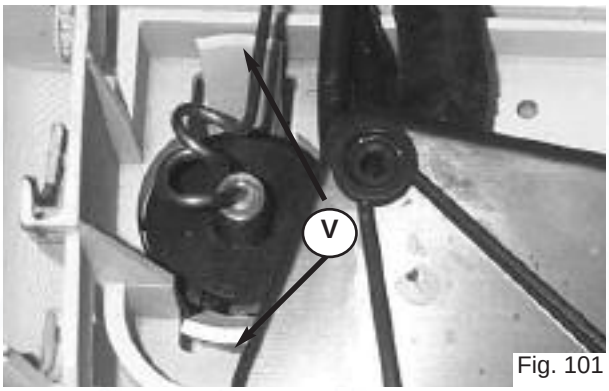

Fig. 101

18.3.12 Removing the pressure switch

1. Remove the casing as in step **18.1.1** and drain down as in step **18.3.1**;
2. Pull off the connections. Then remove the pressure switch by releasing it's securing clip (see Fig. 102).

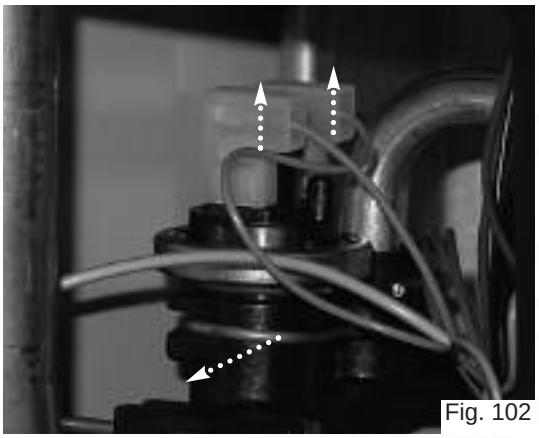
Fig. 102

18.3.13 Removing & cleaning the condensate trap

1. Unscrew the cap of the condensate trap (see Fig. 103)

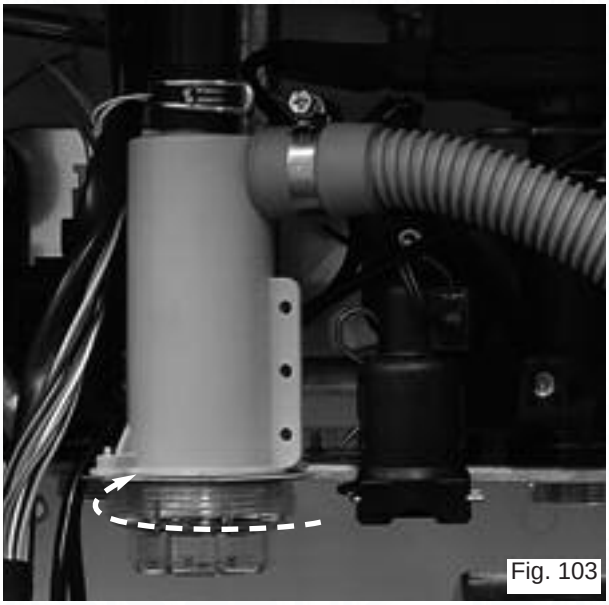
Fig. 103

2. Empty the condensate products and rinse the condensate trap with clean water (see Fig. 104)
3. Reassemble in reverse order and fill the condensate trap with 1/2 litre of water before restarting the boiler.

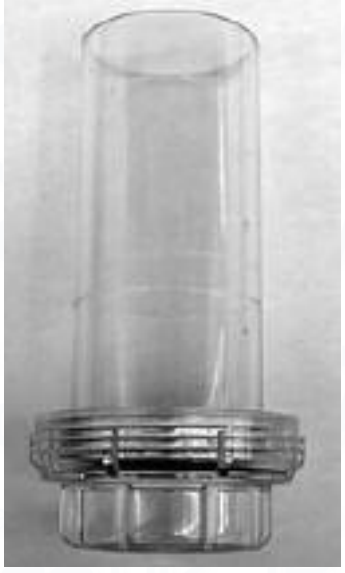
Fig. 104

18.4 Access to the Control System

18.4.1 Removing the P.C.B.s

1. Carry out steps ***18.1.1*** and ***18.1.2***;
2. Remove the two screws **W1** from the electrical box (see Fig. 105);

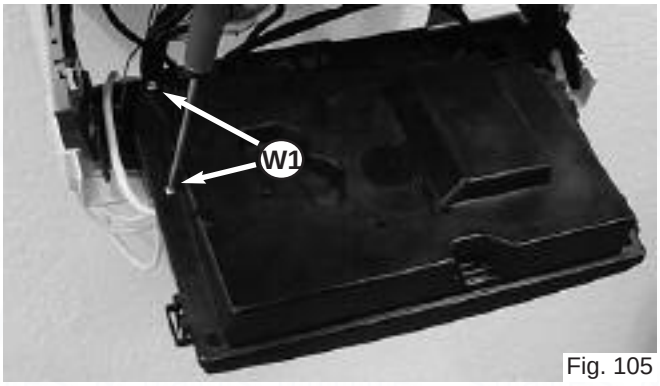

Fig. 105

3. Release the three clips **W2** and remove the electrical box cover (see Fig. 106);

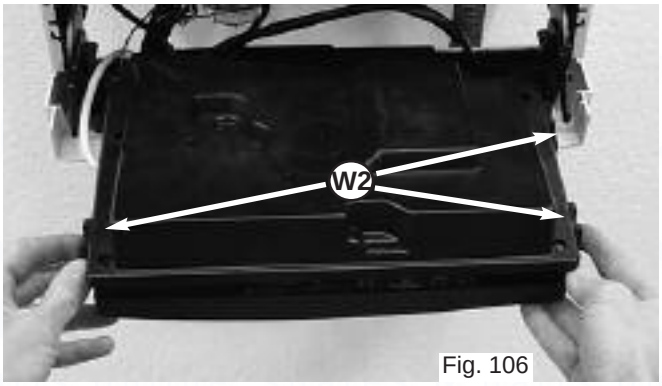

Fig. 106

4. Remove the two screws **W3** from the front control panel and lower the front control panel (see Fig. 107);

Fig. 107

5. Remove all electrical connections from the display PCB (see Fig. 108);

Fig. 108

6. To remove the display PCB, remove the two screw **W4** and lift the PCB out (see Fig. 109);
7. Reassemble in reverse order;

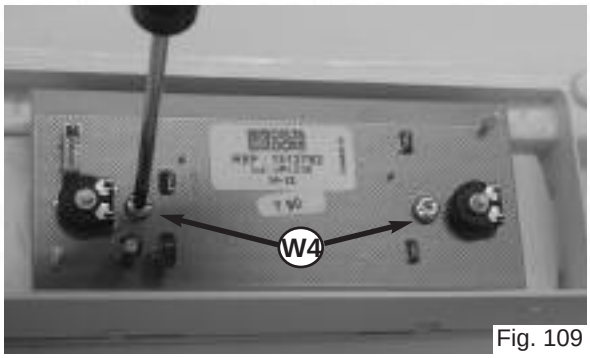

Fig. 109

8. To remove the main PCB disconnect all electrical connections and remove the two screws **W5** (see Fig. 110);
   Fit the correct EEPROM supplied with the replacement PCB;
9. Reassemble in reverse order.

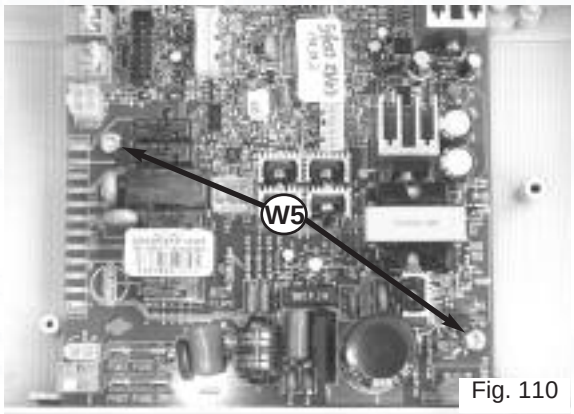

Fig. 110

18.4.2 Removing the fuses

1. Carry out step ***18.4.1***;
2. Remove the fuses "**X**" (see Fig. 111)
3. Reassemble in reverse order.

NOTE: FUSE RATING = 2AMP FAST FUSE

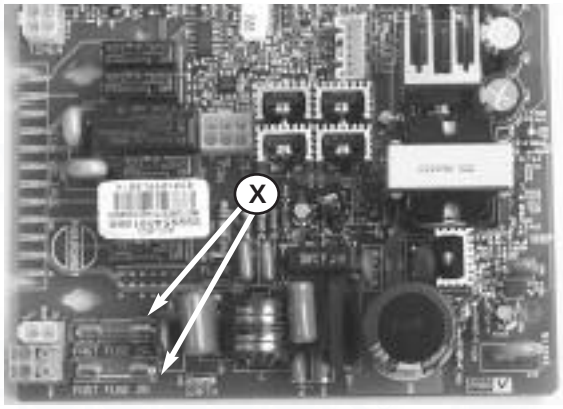

Fig. 111

18.4.3 Connecting the external sensor

1. Access the main PCB as in step ***18.4.1***;
2. Install the interface PCB supplied in the external sensot kit on the main PCB (see Fig. 112);
3. Connect the wires between the external sensor and the interface PCB* (see Fig. 112).

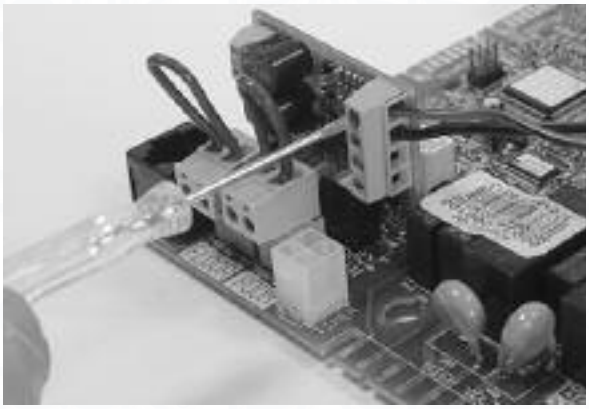
Fig. 112

* **ENSURE THAT THE WIRES FOR THE EXTERNAL SENSOR ARE CONNECTED TO THE TERMINALS INDICATED IN FIG. 112.**
NOTE: THE WIRES ARE NOT POLARITY SENSITIVE.
IMPORTANT!!
DO NOT FIT THE EXTERNAL SENSOR IN THE EVENT THAT THE BOILER IS BEING USED TO HEAT AN INDIRECT HOT WATER STORAGE CYLINDER.

19. Incorrect function

In case of problem, or when the boiler has displayed an error code, the display flashes 2 digits. Please refer to the table below to diagnose the fault.

For faults 01 and 03, **A** appears on the display, the boiler is locked and the reset button illuminates (28). To reset the boiler press the reset button **29**.

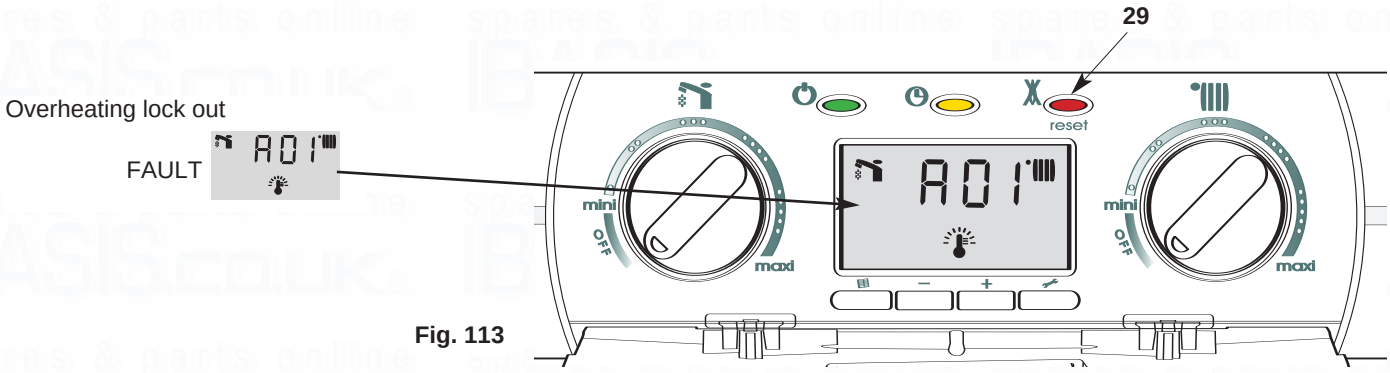

Fig. 113

Code	Fault description
A 01	Overheating lock out / Heat exchanger thermo fuse
A 03	No flame after safety timer
A 18	3 "flames in progress" disappearances in 1 operating cycle
A 37	CPU fault
A 39	MCU fault 1
A 40	MCU fault 2
A 41	Fan error
E 02	Pump protect (display after 40s.)
E 04	No flame detection
E 05	Anti freezing system, pump on
E 06	Anti freezing system, pump and burner on
E 07	No water circulation in primary circuit
E 08	No water in the primary circuit
E 09	DHW sensor open circuit
E 10	DHW sensor short circuit
E 11	Flow sensor open circuit
E 12	Flow sensor short circuit
E 13	Return sensor open circuit
E 14	Return sensor short circuit
E 15	Outdoor sensor open circuit (if fitted)
E 16	Outdoor sensor short circuit (if fitted)
E 18	Flame lift
E 20	Flame detect with gas valve off
E 29	Communication problem with offset unit
E 30	Communication problem with offset unit
E 33	Floor heating thermostat open circuit (if fitted) (ROOM THERMOSTAT FLOOR)
E 37	Communication problem with the main PCB
E 38	Reset button pressed 5 times in 15 minutes

19. Incorrect function (continued)

Fault	Cause	Solution
The boiler doesn't start	No gas, no water or no electricity	Control gas, water and electrical supply, fuses…
	Air in the gas pipe	Purge the air from the gas pipe
	Room thermostat switched off	Turn the room thermostat up
Red indicator alight	Overheat lockout (A01) No flame after safety time (A03) No flame detected (E04) Flame lift (E18)	Wait for a few minutes Press the reset button **29** (Fig. 113) the red led goes out and the boiler attempts to re-light. If the red indicator lights too frequently, please call your local service centre.
Noises in CH system	Air presence in CH system or. Insufficient pressure	Purge the system of air (Section 14.2, page 28) and increase the system pressure (Section 2, page 6)
Radiators rise in temperature During summer season	Gravity effect in the CH system	Close the heating flow isolating valve (**41** Fig. 2, page 5). Don't forget to open it again before starting the heating.
If after A01 fault and with cold boiler, The boiler doesn't start	Overheat lockout (A01)	Check the thermo fuse on the right top on the heat exchanger. With an open thermo fuse, a replacement of all the heat exchanger is required.

If these solutions do not cure the fault, call a qualified professional

20. Maintenance

20.1 General remarks

It is recommended that the following inspections be carried out on the boiler at least once a year;

1. Check the seals in the water group, and if necessary, replace the gasket and restore the seal to perfect working order;
2. Check the seals in the gas group, and if necessary replace the gaskets and restore the seal to perfect working order;
3. Visually check the overall condition of the boiler;
4. Visually check the combustion, and if necessary, disassemble and clean the burner;
5. Following inspection 3, disassemble and clean the combustion chamber as necessary;
6. Following inspection 4, disassemble and clean the injector, if necessary;
7. Clean the primary heat exchanger. (see Section 20.2);
8. Check and adjust the CO_2 emissions as necessary (see Section 14.3);
9. Check the correct operation of the heating safety devices:
   - Overheat thermostat
10. Check the correct operation of the flow switches;
11. Check the correct operation of the low pressure switch;
12. Check the diverter valve movement;
13. Check the correct operation of the gas group safety devices:
    - absence of gas or flame safety device (ionisation);
14. Check that the electrical connections are correct (as described in Section 13, page 27 Fig 38);
15. Check the efficiency of the production of domestic hot water (test the flow rate and temperature rise);
16. Carry out a general inspection of the boiler;
17. Check the flue and termination point;
18. Remove any oxide from the detection electrode by using an emery cloth.

20.2 Cleaning the primary exchanger

Cleaning the exhaust side

Remove the air gas assembly (Section 18.2.1). Check that the exhaust passages are free, if there are deposits present, clean the exchanger with compressed air or wash with water or a vinegar based detergent.

Cleaning the water side

Use detergents that dissolve CaCO3. Leave to act for a short time and then rinse.
Make sure that the detergent does not remain inside the exchanger.

20.3 Operational test

Unscrew the lower part of the condensate trap and clean it. Fill it with water and replace.

After carrying out the maintenance operation, fill the heating circuit to a pressure of approximately 1.5 bar and release the air from the system. Also fill the domestic hot water system.

- Place the boiler in operation.
- If necessary, release the air again from the heating system.
- Check the settings, seals and the correct functioning of the system for expelling the products of combustion and drawing combustion air.
- Check the settings and correct operation of all the control, regulation and monitoring components.
- Check that the burner ignites properly and carry out a visual check of the burner flame.
- Check that the 3 bar safety valve is operating correctly.
- Check the operation of the time control and room thermostat (if fitted).

NOTE: THESE CHECKS ARE NOT EXHAUSTIVE

ONCE THE BOILER HAS BEEN SERVICED IT IS NECESSARY TO COMPLETE THE SERVICE INTERVAL RECORD (SECTION 24, PAGE 58)

21. Short spares list

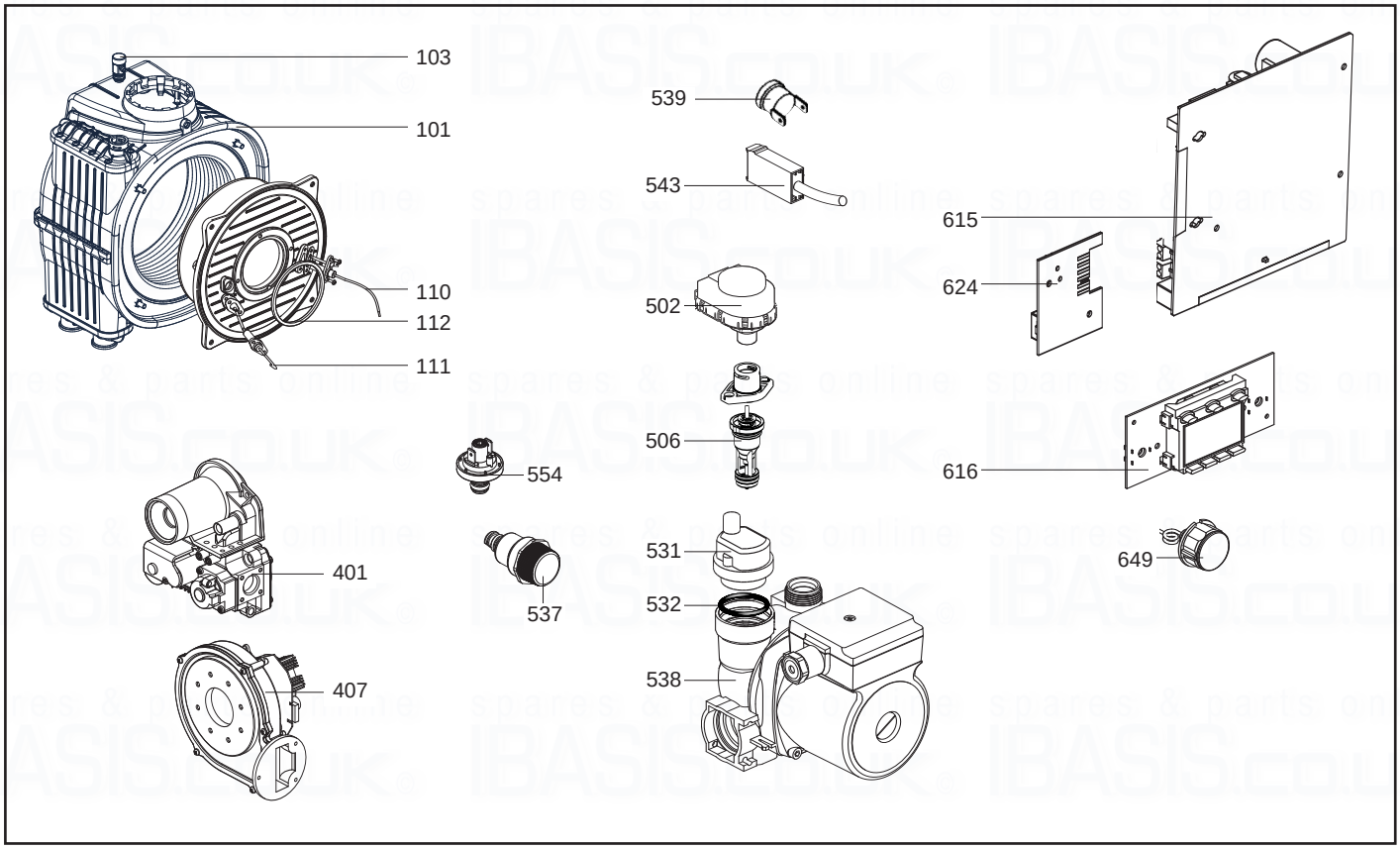

Key N	Description	Manf. Pt. N	Other	Type	COMBI A 24 FF	COMBI A 30 FF		Manf. date from	Manf. date to
0100	**BURNER ASSEMBLY**								
0101	BURNER 24KW	60000292			■				
	BURNER 30KW	60000293				■			
0103	SOUPAPE	60000295			■	■			
0110	IGNITION ELECTRODE	61317432			■	■			
0111	IONIZATION ELECTRODE	60000312			■	■			
0112	GASKET D:85-66.5-2.5	61314753			■	■			
0400	**GAS SECTION**								
0401	GAS VALVE	61307584		NAT	■				
	GAS VALVE	61310129		NAT		■			
0407	FAN ASSY	61314434			■	■			
0500	**HYDRAULIC BLOCK**								
0502	MOTOR - THREE-WAY VALVE	61302483			■	■			
0506	VALVE KIT	61311597			■	■			
0531	AIR SEPARATOR HEAD ASSEMBLY	61304608			■	■			
0532	GASKET KIT	61304618			■	■			
0537	PRESSURE RELIEF VALVE	61312668			■	■			
0538	PUMP + AIR SEPARATOR 15/50	61301964			■	■			
	PUMP + AIR SEPARATOR 15/60	61303461			■	■			
0539	OVERHEAT THERMOSTAT 100°C	61010572	277783		■	■			
0543	STOPPED WATER THROTTLE	61311745			■	■			
0554	PRESSURE SENSOR 0.8b	61310364			■	■			
0600	**ELECTRICAL BOX**								
0615	PRINTED CIRCUIT BOARD	60000284			■	■			
0616	PRINTED CIRCUIT BOARD	60000176			■	■			
0624	PRINTED CIRCUIT BOARD	61314958			■	■			
0649	PRESSURE GAUGE	61313561			■	■			

22. Technical data

Model				Combi A 24 MFFi		
CE certificate				1312-BP-4083		
Performance category				****		
NoX class				5		
Category				II2H3P		
Heating output	80°C/60°C		kW	5 to 21		
Heating output	50°C/30°C		kW	6 to 23		
Variable hot water power	Pn max		kW	25,1		
Nominal gas flow rate (15 °C-1013 mbar)				min	max	
Central Heating & DHW flow rate		Qn	kW	5,5	22	25
G 20 (NG H -Lacq)	34,02 MJ/m³ under 20 mbar	Vr	m³/h	0,58	2,33	2,65
G 31 (Propane)	46,4 MJ/kg 37 under mbar	Vr	kg/h	0,43	1,71	1,94
Membrane Diameter (mm)/marking						
G 20			mm	without		
G 31 (propane)			mm	4,4		
Adjustable heating outlet temperature:			°C	25 to 85		
Central heating minimum flow rate			l/h	300		
Central heating circuit maximum pressure	Pw max		bar	3		
Central heating expansion vessel capacity			L	6		
Expansion vessel inflation pressure			bar	0,7		
Adjustable hot water temperature			°C	40 to 60		
DHW ignition flow rate			l/min.	2		
DHW specific flow rate (ΔT: 30 K)		D	l/min.	12,0		
DHW start minimum pressure	Pw min		bar	0,3		
Maximum pressure of DHW circuit	Pw max		bar	10		
DHW expansion vessel		L		without		
Electric voltage				230 volt, single phase - 50 Hz		
Electrical input power		W		150		
Electrical protection				IPX 4D		
Fresh air flow rate required for combustion		V	m³h.	31		
Mass flow rate for combustion products			g/s	11,5		
Fume temperature (60-80)			°C	67		
Fume temperature (30-50)			°C	60		
CO2 G20			%	9		
CO2 G31			%	10		
Dimensions	Height / Width / Depth (mm)			720 / 390 / 296		
Weight			kg	37		
Flue duct type				C13 C33 C43 C53 B23		

This appliance is suitable for Natural gas or LPG. A gas conversion must be made by a competent person.

Model				Combi A 30 MFFi		
CE certificate				1312-BP-4084		
Performance category				****		
NoX class				5		
Category				II2H3P		
Heating output	80°C/60°C	Kw		6 to 27		
Heating output	50°C/30°C	Kw		7 to 29		
Variable hot water power	Pn max	Kw		30,2		
Nominal gas flow rate (15 °C-1013 mbar)				min	max	
Central Heating & DHW flow rate		Qn	kW	6,5	28	30
G 20 (NG H -Lacq)	34,02 MJ/m³ under 20 mbar	Vr	m³/h	0,69	2,96	3,17
G 31 (Propane)	46,4 MJ/kg 37 under mbar	Vr	kg/h	0,50	2,17	2,33
Membrane Diameter (mm)/marking						
G 20			mm	without		
G 31 (propane)			mm	4,6		
Adjustable heating outlet temperature:			°C	25 to 85		
Central heating minimum flow rate			l/h	300		
Central heating circuit maximum pressure	Pw max		bar	3		
Central heating expansion vessel capacity			L	6		
Expansion vessel inflation pressure			bar	0,7		
Adjustable hot water temperature			°C	40 to 60		
DHW ignition flow rate			l/min.	2		
DHW specific flow rate (ΔT: 30 K)		D	l/min.	15,0		
DHW start minimum pressure	Pw min		bar	0,3		
Maximum pressure of DHW circuit	Pw max		bar	10		
DHW expansion vessel		L		without		
Electric voltage				230 volt, single phase - 50 Hz		
Electrical input power		W		150		
Electrical protection				IPX 4D		
Fresh air flow rate required for combustion		V	m³h.	36		
Mass flow rate for combustion products				13,5		
Fume temperature (60-80)			°C	67		
Fume temperature (30-50)			°C	60		
CO2 G20			%	9		
CO2 G31			%	10		
Dimensions	Height / Width / Depth (mm)			720 / 390 / 360		
Weight			kg	40		
Flue duct type				C13 C33 C43 C53 B23		

This appliance is suitable for Natural gas or LPG. A gas conversion must be made by a competent person.

23. Benchmark Commissioning Checklist

BENCHMARK No. | | | | | | |

benchmark™ COLLECTIVE MARK

GAS BOILER COMMISSIONING CHECKLIST

BOILER SERIAL No. _____ NOTIFICATION No. _____

CONTROLS To comply with the Building Regulation, each section must have a tick in one or other of the boxes

TIME & TEMPERATURE CONTROL TO HEATING	ROOM T/STAT & PROGRAMMER/TIMER ☐	PROGRAMMABLE ROOMSTAT ☐
TIME & TEMPERATURE CONTROL TO HOT WATER	CYLINDER T/STAT & PROGRAMMER/TIMER ☐	COMBI BOILER ☐
HEATING ZONE VALVES	FITTED ☐	NOT REQUIRED ☐
HOT WATER ZONE VALVES	FITTED ☐	NOT REQUIRED ☐
THERMOSTATIC RADIATOR VALVES	FITTED ☐	
AUTOMATIC BYPASS TO SYSTEM	FITTED ☐	NOT REQUIRED ☐

FOR ALL BOILERS CONFIRM THE FOLLOWING

THE SYSTEM HAS BEEN FLUSHED IN ACCORDANCE WITH THE BOILER MANUFACTURER'S INSTRUCTIONS? ☐

THE SYSTEM CLEANER USED

THE INHIBITOR USED

FOR THE CENTRAL HEATING MODE, MEASURE & RECORD

GAS RATE	☐	m^3/hr	☐	ft^3/hr
BURNER OPERATING PRESSURE (IF APPLICABLE)	☐	N/A	☐	mbar
CENTRAL HEATING FLOW TEMPERATURE			☐	°C
CENTRAL HEATING RETURN TEMPERATURE			☐	°C

FOR COMBINATION BOILERS ONLY

HAS A WATER SCALE REDUCER BEEN FITTED? YES ☐ NO ☐

WHAT TYPE OF SCALE REDUCER HAS BEEN FITTED

FOR THE DOMESTIC HOT WATER MODE, MEASURE & RECORD

GAS RATE	☐	m^3/hr	☐	ft^3/hr
MAXIMUM BURNER OPERATING PRESSURE (IF APPLICABLE)	☐	N/A	☐	mbar
COLD WATER INLET TEMPERATURE			☐	°C
HOT WATER OUTLET TEMPERATURE			☐	°C
WATER FLOW RATE			☐	lts/min

FOR CONDENSING BOILERS ONLY CONFIRM THE FOLLOWING

THE CONDENSATE DRAIN HAS BEEN INSTALLED IN ACCORDANCE WITH THE MANUFACTURER'S INSTRUCTIONS? YES ☐

FOR ALL INSTALLATIONS CONFIRM THE FOLLOWING

THE HEATING AND HOT WATER SYSTEM COMPLIES WITH CURRENT BUILDING REGULATIONS ☐

THE APPLIANCE AND ASSOCIATED EQUIPMENT HAS BEEN INSTALLED AND COMMISSIONED IN ACCORDANCE WITH THE MANUFACTURER'S INSTRUCTIONS ☐

IF REQUIRED BY THE MANUFACTURER, HAVE YOU RECORDED A CO/CO2 RATIO READING? N/A ☐ YES ☐ CO/CO_2 RATIO

THE OPERATION OF THE APPLIANCE AND SYSTEM CONTROLS HAVE BEEN DEMONSTRATED TO THE CUSTOMER ☐

THE MANUFACTURER'S LITERATURE HAS BEEN LEFT WITH THE CUSTOMER ☐

COMMISSIONING ENG'S NAME PRINT _____ CORGI ID No. _____

SIGN _____ DATE _____

BASIS.co.uk. BASIS.co.uk. BASIS.co.uk.

spares & parts online spares & parts online spares & parts online

24. Service Interval Record

SERVICE INTERVAL RECORD

It is recommended that your heating system is serviced regularly
and that you complete the appropriate Service Interval Record Below.

Service Provider. Before completing the appropriate Service Interval Record below, please ensure you have carried out the service as described in the boiler manufacturer's instructions. Always use the manufacturer's specified spare part when replacing all controls

SERVICE 1 DATE
ENGINEER NAME
COMPANY NAME
TEL No.
CORGI ID CARD SERIAL No.
COMMENTS

SIGNATURE

SERVICE 2 DATE
ENGINEER NAME
COMPANY NAME
TEL No.
CORGI ID CARD SERIAL No.
COMMENTS

SIGNATURE

SERVICE 3 DATE
ENGINEER NAME
COMPANY NAME
TEL No.
CORGI ID CARD SERIAL No.
COMMENTS

SIGNATURE

SERVICE 4 DATE
ENGINEER NAME
COMPANY NAME
TEL No.
CORGI ID CARD SERIAL No.
COMMENTS

SIGNATURE

SERVICE 5 DATE
ENGINEER NAME
COMPANY NAME
TEL No.
CORGI ID CARD SERIAL No.
COMMENTS

SIGNATURE

SERVICE 6 DATE
ENGINEER NAME
COMPANY NAME
TEL No.
CORGI ID CARD SERIAL No.
COMMENTS

SIGNATURE

SERVICE 7 DATE
ENGINEER NAME
COMPANY NAME
TEL No.
CORGI ID CARD SERIAL No.
COMMENTS

SIGNATURE

SERVICE 8 DATE
ENGINEER NAME
COMPANY NAME
TEL No.
CORGI ID CARD SERIAL No.
COMMENTS

SIGNATURE

SERVICE 9 DATE
ENGINEER NAME
COMPANY NAME
TEL No.
CORGI ID CARD SERIAL No.
COMMENTS

SIGNATURE

SERVICE 10 DATE
ENGINEER NAME
COMPANY NAME
TEL No.
CORGI ID CARD SERIAL No.
COMMENTS

SIGNATURE

BASIS.co.uk BASIS.co.uk BASIS.co.uk

25. Notes

MTS are continuously improving their products and therefore reserve the right to change specifications without prior notice and accepts no liability for any errors or omission in the information contained in this document.

Manufacturer: MTS (SA) - France

Commercial subsidiary: MTS (GB) Limited
MTS Building
Hughenden Avenue
High Wycombe
Bucks HP13 5FT

Telephone: (01494) 755600
Fax: (01494) 459775
Internet: www.mtsgb.ltd.uk
E-mail: info@uk.mtsgroup.com

Technical Support Help Line: 0870 241 8180
Customer Service Help Desk: 0870 600 9888

420010028000 - 02/2006