EuroCombi

ARISTON

A/23 MFFI - A/27 MFFI

G.C.N. **47-116-10 / 47-116-12**

Installation Instructions

Type C Boilers

LEAVE THESE INSTRUCTIONS ADJACENT TO THE GAS METER

Country of destination: GB

spares & parts online BASICS.co.uk

TABLE OF CONTENTS

1. GENERAL INFORMATION

1.1 General Instructions
1.2 Technical Information
1.3 Overall View

2. INSTALLATION

2.1 Reference Standards
2.2 Siting the Appliance
2.3 Overall Dimensions
2.4 Clearances
2.5 Mounting the Appliance
2.6 Electrical Connection
2.7 Gas Connection
2.8 Water Connections
2.9 Flue Connection
2.10 Room Thermostat Connection
2.11 Electrical/System Diagrams
2.12 Water Circuit Diagrams

3. COMMISSIONING

3.1 Initial Preparation
3.2 Removing the Front Panel
3.3 Control Panel
3.4 Initial Start-up
3.5 Operational Adjustments
3.6 Combustion Analysis
3.7 Fume Discharge Monitoring
3.8 Boiler Safety Systems
3.9 Draining the System

4. GAS ADJUSTMENTS

Gas Adjustment Table
4.1 Changing the Type of Gas

5. MAINTENANCE

6. MISCELLANEOUS

6.1 Wiring Diagram for Two Heating Zones
6.2 Wiring Diagram for Connection to Ariston Unvented Cylinderl

1. GENERAL INFORMATION

This manual is an integral and essential part of the product. It should be kept with the appliance so that it can be consulted by the user and our authorised personnel.

Please carefully read the instructions and notices about the unit contained in this manual, as they provide important information regarding the safe installation, use and maintenance of the product.

For operating instructions please consult the separate User's Manual.

1.1 General Instructions

Read the instructions and recommendations in these Installation Instructions carefully to ensure proper installation, use and maintenance of the appliance.

Keep this manual in a safe place. You may need it for your own reference while our Servicing Centre technicians or your installer may need to consult it in the future.

This is a combined appliance for the production of central heating (C.H.) and domestic hot water (D.H.W.).

This appliance **must be used only** for the purpose for which it is designed.
The manufacturer declines all liability for damage caused by improper or negligent use.

No asbestos or other hazardous materials have been used in the fabrication of this product.

Before connecting the appliance, check that the information shown on the data plate and the table on pages 4-5 comply with the electric, water and gas mains of the property. You will find the data plate on the reverse of the control panel.
The gas with which this appliance operates is also shown on the label at the bottom of the boiler.

Do not install this appliance in a damp environment or close to equipment which spray water or other liquids.
Do not place objects on the appliance.
Do not allow children or inexperienced persons to use the appliance without supervision.

If you smell gas in the room, **do not turn on** light switches, use the telephone or any other object which might cause sparks.
Open doors and windows immediately to ventilate the room.
Shut the gas mains tap (on the gas meter) or the valve of the gas cylinder and call your Gas Supplier immediately.
If you are going away for a long period of time, remember to shut the mains gas tap or the gas cylinder valve.

Always disconnect the appliance either by unplugging it from the mains or turning off the mains switch before cleaning the appliance or carrying out maintenance.

In the case of faults or failure, switch off the appliance and turn off the gas tap. Do not tamper with the appliance.
For repairs, call your local Authorised Servicing Centre and request the use of original spare parts. For in-guarantee repairs contact MTS (GB) Limited.

Check the following at least once a year:
1 - Check the seal of water connections, replacing the gaskets if necessary.
2 - Check the seal of the gas connections, replacing the gaskets if necessary.
3 - Check the general condition of the appliance and of the combustion

chamber visually.

4 - Visual check of the combustion: clean burners if necessary.

5 - With reference to point 3, dismantle and clean the combustion chamber if necessary.

6 - With reference to point 4, dismantle and clean the injectors if necessary.

7 - Visual check of the primary heat exchanger:
- check for overheating of the exchangers fins;
- clean the exhaust side of the exchanger and fan if necessary.

8 - Regulate the gas pressure, ignition pressure, partial flame, maximum flame.

9 - Check proper operation of the heating safety system:
- maximum safety temperature;
- maximum safety pressure.

10 - Check the proper operation of the gas safety system:
- gas or flame safety device;
- gas valve safety device.

11 - Check that the electrical connections have been made in compliance with the instructions shown in the installation instructions.

12 - Check the efficiency of the hot water supply (flow and temperature).

13 - Check general operation of the appliance.

14 - Check the exhaust system for the combustion products.

1.2 Technical Information

		A/23 MFFI	A/27 MFFI
CE Certification			
Heat Input	max/min kW	25.6/11.0	29.8/12.0
Heat Output	max/min kW	23.1/9.2	27.3/10.1
Efficiency of Nominal Heat Input	%	90.2	91.6
Efficiency at 30% of Nominal Heat Input	%	87.8	88.3
Heat Loss to the Casing (³T=50°C)	%	1.2	1.3
Flue Heat Loss with Burner Operating	%	8.6	7.1
Flue Heat Loss with Burner Off	%	0.4	0.4
Maximum Discharge of Fumes (G20-G25)	Kg/h	59	62
Residual Discharge Head	mbar	1.15	1.4
Consumption at Nominal Capacity (G20-G25)	m^3/h	2.72/3.32	3.16/3.86
Gas Consumption after 10 Minutes*	m^3	0.32/0.39	0.37/0.45
(15°C, 1013 mbar) (G30-G31)	Kg/h	2.02/2.00	2.35/2.32
Temp. of exhaust fumes at nominal capacity (G20-G25)	°C	137	128
CO_2 Content	%	5.8	6.6
O_2 Content	%	9.2	8.0
CO Content	ppm	32	34
Minimum Ambient Temperature	°C	+5	+5
Head Loss on Water Side (max) (³T=20°C)	mbar	200	200
Residual Head of System	bar	0.25	0.25
Heating Temperature	max/min °C	82/42	82/42
Domestic Hot Water Temperature	max/min °C	56/36	56/36
D.H.W. Flow Rate ³T=35°C	l/min	9.5	11.2
D.H.W. Flow Rate ³T=35°C	gal/min	2.1	2.5
D.H.W. Minimum Flow Rate	l/min	2.6	2.6
Pressure of Domestic Hot Water	max/min bar	6/0.2	6/0.2
Expansion Vessel Capacity	l	7	7
Expansion Vessel Pre-load Pressure	bar	1	1
Maximum Water Content in System	l	145	145
Maximum Heating Pressure	bar	3	3
Nominal Pressure Natural Gas (G20-G25)	mbar	20-25	20-25
LPG (G30-G31)	mbar	30-37	30-37
Electrical Supply	V/Hz	230 / 50	230 / 50
Power Consumption	W	150	190
Protection Grade of Electrical System	IP	44	44
Internal Fuse Rating		FAST 2 AT	FAST 2 AT
Weight	Kg.	47	47
G.C. Number		**47-116-10**	**47-116-12**

*Calculated at 70% maximum output

1.3 Overall View

A/23 MFFI - A/27 MFFI

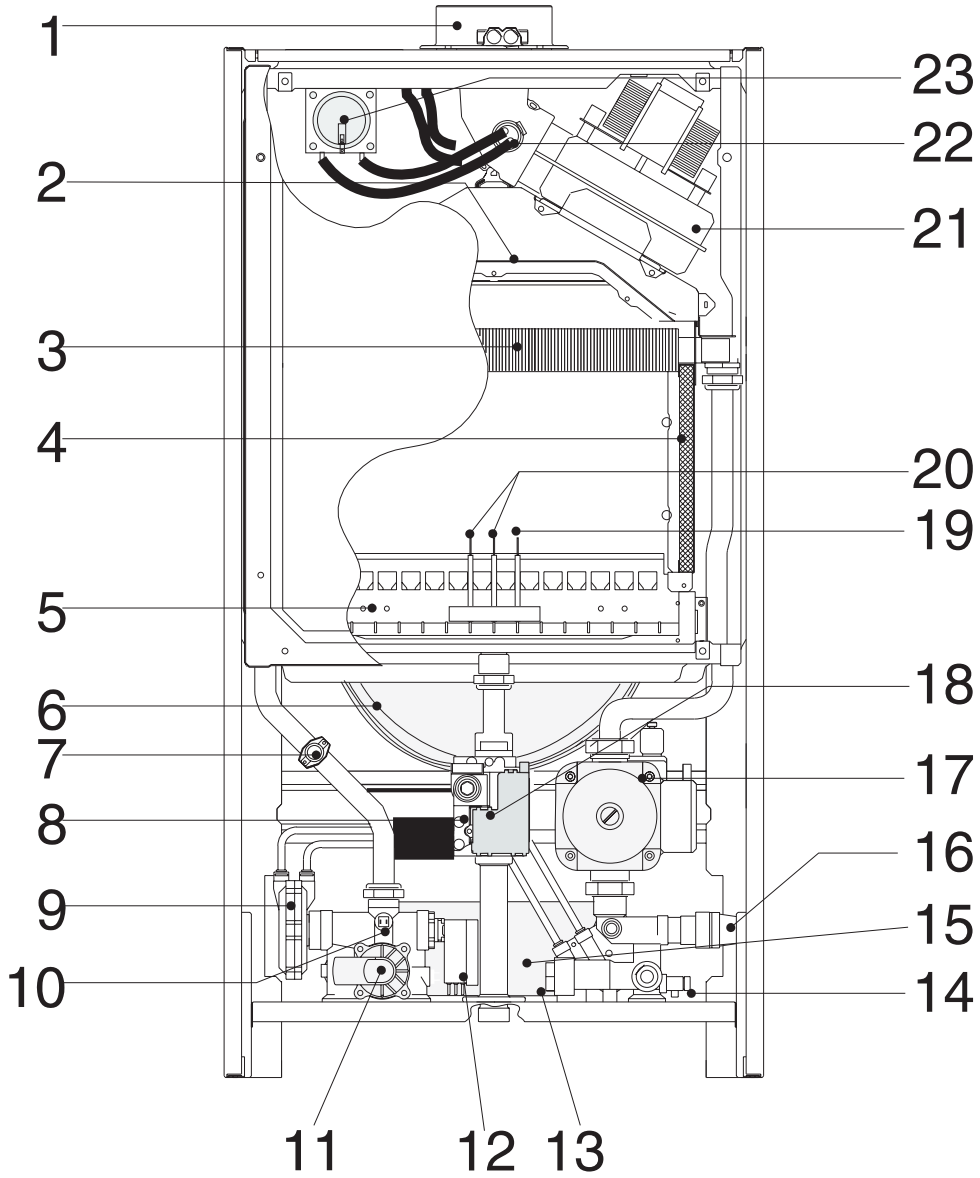

Fig. 1.1

Legend:

1. Flue Connector
2. Combustion Chamber Hood
3. Main Heat Exchanger
4. Combustion Chamber Insulation Panel
5. Burner
6. Expansion Vessel
7. Overheat Thermostat
8. Spark Generator
9. Diverter Valve
10. Main Circuit Temperature Probe
11. Main Circuit Flow Switch
12. Diverter Valve Microswitch
13. Filter Seat
14. Drain Valve
15. Secondary Heat Exchanger
16. Safety Valve (3 bar)
17. Circulation Pump with Automatic Air Release Valve
18. Gas Valve
19. Detection Electrodes
20. Ignition Electrodes
21. Fan
22. Venturi
23. Air Pressure Switch

2. INSTALLATION

The technical information and instructions provided herein below are intended for the installer so that the unit may be installed correctly and safely.

2.1 Reference Standards

The installation and initial start up of the boiler must be by a CORGI Approved Installer in compliance with the installation standards currently in effect, as well as with any and all local health and safety standards i.e. CORGI .

This appliance must be installed by a competent installer in accordance with the 1984 Gas Safety (installation & use) Regulations (as amended)

The installation of this appliance must be in accordance with the relevant requirements of the 1984 Gas Safety (installation & use) Regulations, the Local Building Regulations, the current I.E.E. Wiring Regulations, the byelaws of the local water authority, and in Scotland, in accordance with the Building Standards (Scotland) Regulation and Health and Safety document No. 635 “Electricity at work regs. 1989”.
Installation should also comply with the following British Standard Codes of Practice:

Low pressure pipes	BS 6891	1988
Boilers of rated input not exceeding 60 kW	BS 6798	1987
Forced circulation hot water system	BS 5449	1990
Installation of gas hot water supplies for domestic purposes (2nd family gases)	BS 5546	1990
Flues	BS 5440-1	1990
Air supply	BS 5440-2	1989

2.2 Siting the Appliance

The appliance may be installed in any room or indoor area, although particular attention is drawn to the requirements of the current I.E.E. Wiring Regulations, and in Scotland, the electrical provisions of the Building Regulations applicable in Scotland, with respect to the installation of the combined appliance in a room containing a bath or shower.
Where a room-sealed appliance is installed in a room containing a bath or shower the boiler and any electrical switch or appliance control, utilising mains electricity should be situated so that it cannot be touched by a person using the bath or shower.
The location must permit adequate space for servicing and air circulation around the appliance as indicated in paragraph 2.4.
The location must permit the provision of an adequate flue and termination.
For unusual locations special procedures may be necessary.
BS 6798-1987 gives detailed guidance on this aspect.
A compartment used to enclose the appliance must be designed specifically for this purpose. No specific ventilation requirements are needed for an installation within a cupboard
This appliance is not suitable for outdoor installation.

The type C appliances (in which the combustion circuit, air vent intake and combustion chamber are air-tight with respect to the room in which the appliance is installed) can be installed in any type of room.
There are no limitations with respect to ventilation and the volume of the room itself. The boiler must be installed on a solid, permanent wall to prevent access to the electrical parts (when live) through the aperture on the back frame.

2.3 Overall Dimensions

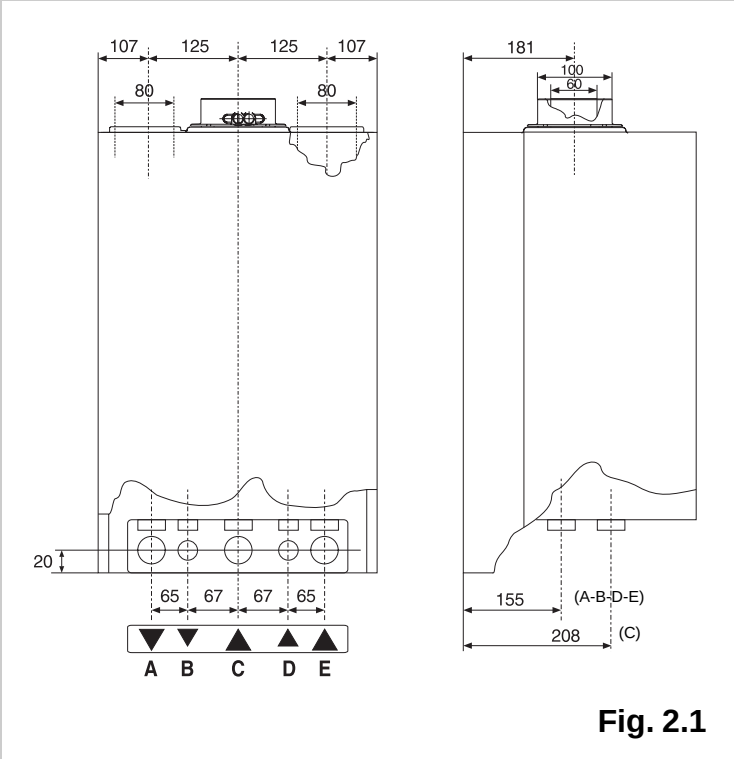

Fig. 2.1

Legend:

A = Central Heating Flow (3/4”)
B = Domestic Hot Water Outlet (1/2”)
C = Gas Inlet (3/4”)
D = Domestic Cold Water Inlet (1/2”)
E = Central Heating Return (3/4”)

2.4 Clearances

In order to allow for access to the interior of the boiler for maintenance purposes, the boiler must be installed in compliance with the minimum clearances indicated in the diagram below.

A/23 MFFI - A/27 MFFI

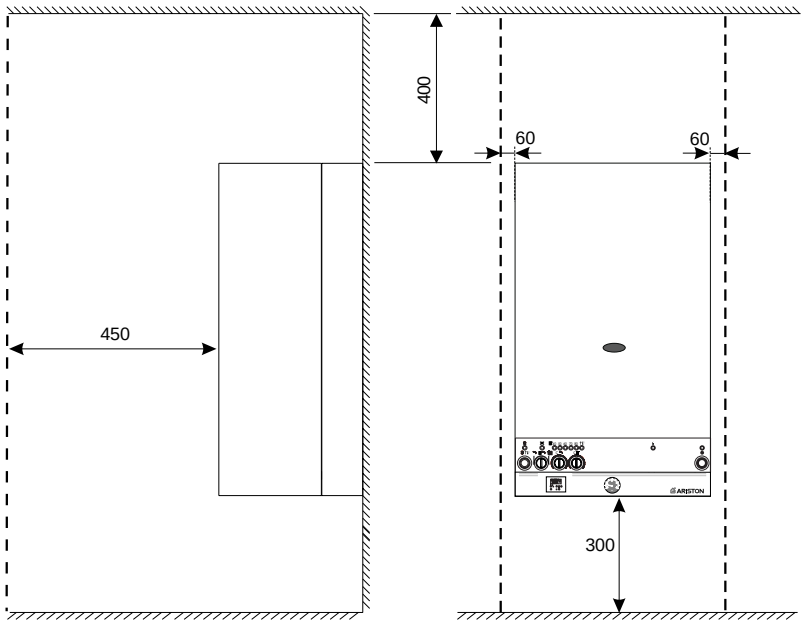

Fig. 2.2

2.5 Mounting the Appliance

Fasten the boiler in place using the template and anchors supplied with the unit. It is highly recommended that a spirit level be used to position the boiler so that it is perfectly level.
For additional information, please consult the instructions contained in the connection kit and the flue kit.

2.6 Electrical Connection

For safety purposes, have a competent person carefully check the electrical system in the property, as the manufacturer will not be held liable for damage caused by the failure to earth the appliance properly or by anomalies in the supply of power. Make sure that the residential electrical system is adequate for the maximum power absorbed by the unit, which is indicated on the rating plate. In addition, check that the section of cabling is appropriate for the power absorbed by the boiler.

The boiler operates with alternating current, as indicated in the technical data table (1.2), where the maximum absorbed power is also indicated. Make sure that the connections for the neutral and live wires correspond to the indications in the diagram. The appliance electrical connections are situated on the reverse of the control panel (see the servicing manual for further information)

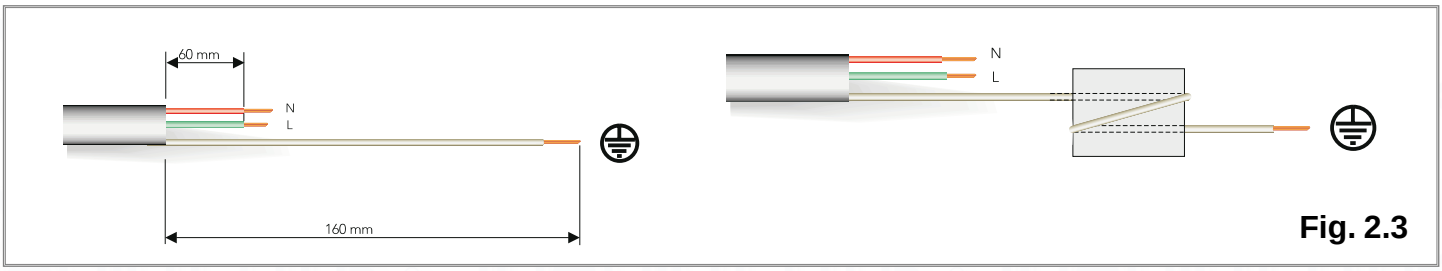

Fig. 2.3

Important!
In the event that the power supply cord must be changed, replace it with one with the same specifications. Make the connections to the terminal board located within the control panel, as follows:
- The yellow-green wire should be connected to the terminal marked with the earth symbol; make sure to re-use the ferrule mounted on the other supply cord;
- The blue wire should be connected to the terminal marked “N”;
- The brown wire should be connected to the terminal marked “L”.

Note: The diagrams for the electrical system are indicated in section 2.11.

Warning, this appliance must be earthed.
External wiring to the appliance must be carried out by a qualified technician and be in accordance with the current I.E.E. Regulations and applicable local regulations. The EuroCombi range of boilers are supplied for connection to a 230 V~ 50 Hz supply.
The supply must be fused at 3 A.
The method of connection to the electricity supply must facilitate complete electrical isolation of the appliance, by the use of a fused double pole isolator having a contact separation of at least 3 mm in all poles or alternatively, by **means of a 3 A** fused three pin plug and unswitched shuttered socket outlet both complying with BS 1363.
The point of connection to the electricity supply must be readily accessible and adjacent to the appliance unless the appliance is installed in a bathroom when this must be sited outside the bathroom.

2.7 Gas Connection

The local gas region contractor connects the gas meter to the service pipe.
If the gas supply for the boiler serves other appliances ensure that an adequate supply is available both to the boiler and the other appliances when they are in use at the same time.
Pipe work must be of an adequate size. Pipes of a smaller size than the boiler inlet connection should not be used.

2.9 Water Connections

A/23 MFFI - A/27 MFFI

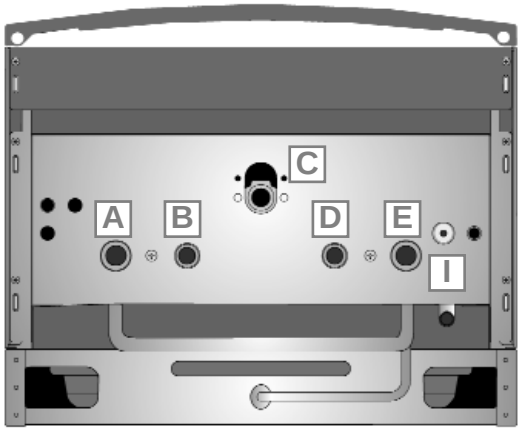

Fig. 2.4

Legend

A = Central Heating Flow
B = Domestic Hot Water Outlet
C = Gas Inlet
D = Domestic Cold Water Inlet
E = Central Heating Return
I = Safety Valve

Central Heating

Detailed recommendations are given in BS 6798:1987 and BS 5449-1:1990, the following notes are given for general guidance.

Pipe Work:

Copper tubing to BS EN 1057:1996 is recommended for water pipes. Jointing should be either with capillary soldered or compression fittings.

Where possible pipes should have a gradient to ensure air is carried naturally to air release points and water flows naturally to drain taps.

The appliance has a built-in automatic air release valve, however it should be ensured as far as possible that the appliance heat exchanger is not a natural collecting point for air.

Except where providing useful heat, pipes should be insulated to prevent heat loss and avoid freezing.

Particular attention should be paid to pipes passing through ventilated spaces in roofs and under floors.

By-pass:

The appliance includes an automatic by-pass valve, which protects the main heat exchanger in case of reduced or interrupted water circulation through the heating system, due to the closing of thermostatic valves or cock-type valves within the system.

System Design:

This boiler is suitable only for sealed systems.

Drain Cocks:

These must be located in accessible positions to permit the draining of the whole system. The taps must be at least 15mm nominal size and manufactured in accordance with BS 2870:1980.

Safety Valve Discharge:

The discharge should terminate facing downwards on the exterior of the building in a position where discharging (possibly boiling water & steam) will not create danger or nuisance, but in an easily visible position, and not cause damage to electrical components and wiring.

The discharge must not be over an entrance or a window or any other type of

public access.

Air Release Points:

These must be fitted at all high points where air naturally collects and must be sited to facilitate complete filling of the system.

The appliance has an integral sealed expansion vessel to accommodate the increase of water value when the system is heated.

It can accept up to 7 l (1.5 gal) of expansion water. If the heating circuit has an unusually high water content, calculate the total expansion and add an additional sealed expansion vessel with adequate capacity.

Mains Water Feed - Central Heating:

There must be no direct connection to the mains water supply even through a non-return valve, without the approval of the Local Water Authority.

Filling:

A temporary method for initially filling the system and replacing lost water during servicing in accordance with Water Supply Byelaw 14 must be provided.

Domestic Water

The domestic water must be in accordance with the relevant recommendation of BS 5546:1990. Copper tubing to BS EN 1057:1996 is recommended for water carrying pipe work and must be used for pipe work carrying drinking water.

Residual Head of the Boiler

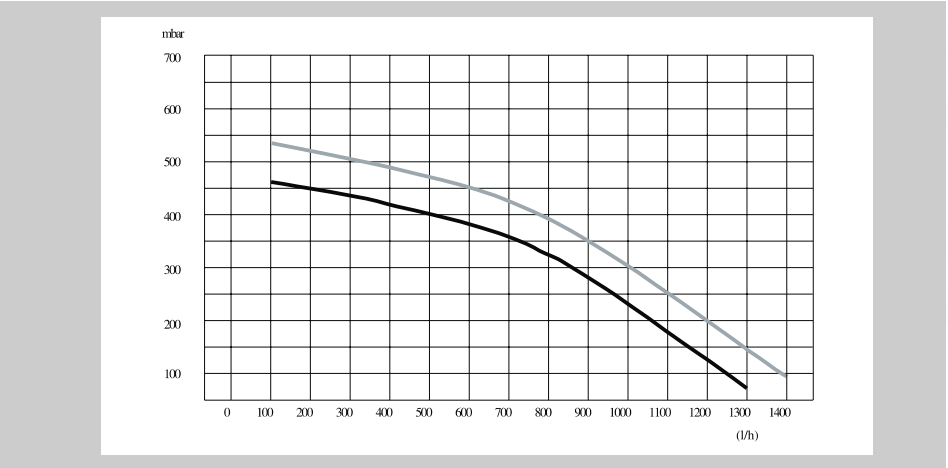

2.9 Flue Connections

Flue System

The provision for satisfactory flue termination must be made as described in BS 5440-1.

The appliance must be installed so that the flue terminal is exposed to outdoor air.

The terminal must not discharge into another room or space such as an outhouse or lean-to.

It is important that the position of the terminal allows a free passage of air across it at all times.

The terminal should be located with due regard for the damage or discolouration that might occur on buildings in the vicinity.

In cold or humid weather water vapour may condense on leaving the flue terminal.

The effect of such "steaming" must be considered.

If the terminal is less than 2 metres above a balcony, above ground or above a flat roof to which people have access, then a suitable terminal guard must be fitted. When ordering a terminal guard, quote the appliance model number.

A suitable terminal guard is available from:

TOWER FLUE COMPONENTS
Morley Road
Tonbridge
Kent TN9 1RA

The minimum acceptable spacing from the terminal to obstructions and ventilation openings are specified in Fig. 2.5.

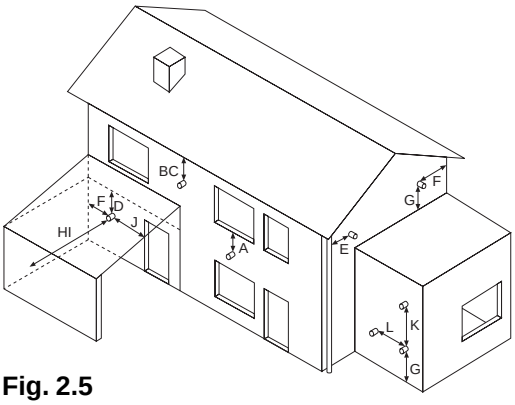

Fig. 2.5

TERMINAL POSITION	mm
A - Directly below an open window or other opening	300
B - Below gutters, solid pipes or drain pipes	75
C - Below eaves	200
D - Below balconies or car-port roof	200
E - From vertical drain pipes and soil pipes	75
F - From internal or external corners	300
G - Above ground or below balcony level	300
H - From a surface facing a terminal	600
I - From a terminal facing a terminal	1200
J - From an opening in the car port (e.g. door, window) into dwelling	1200
K - Vertically from a terminal in the same wall	1500
L - Horizontally from a terminal in the same wall	300

The boiler is designed to be connected to a coaxial flue discharge system.

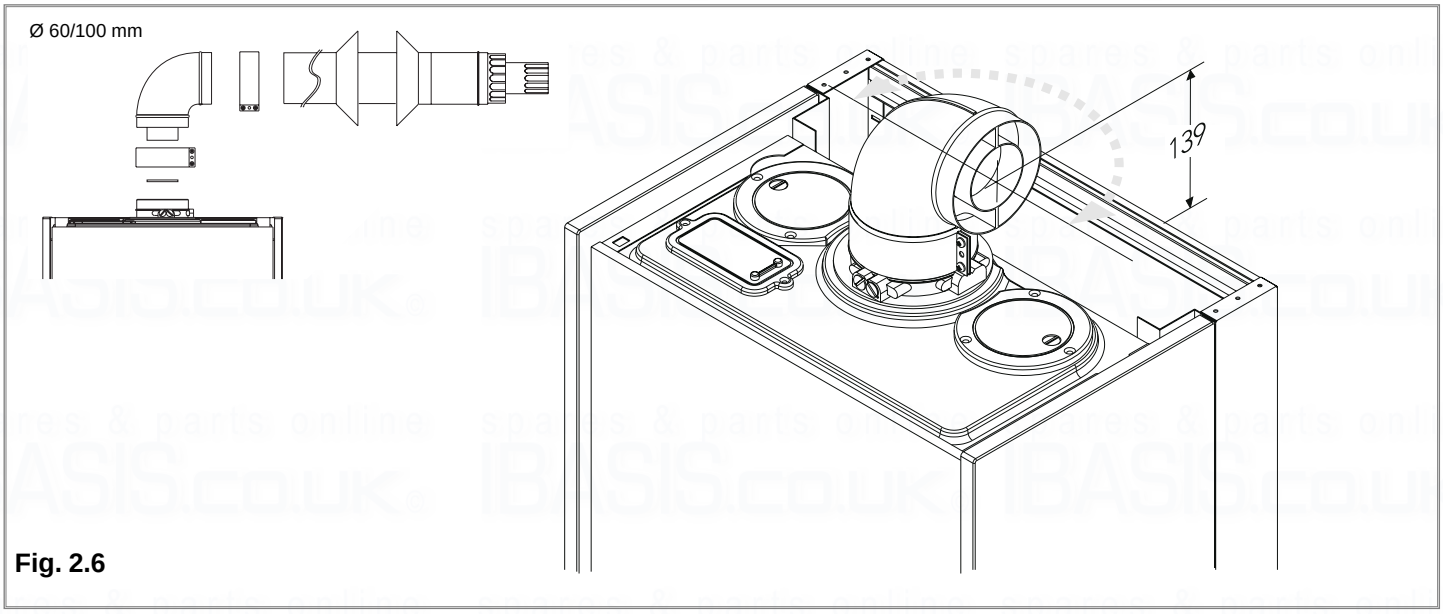

Fig. 2.6

In addition, it is also possible to use a twin-pipe (split) system by fitting a special adaptor to the flue discharge collar and using one of the apertures for the air vent intake located on the top part of the combustion chamber (A).

Fig. 2.7

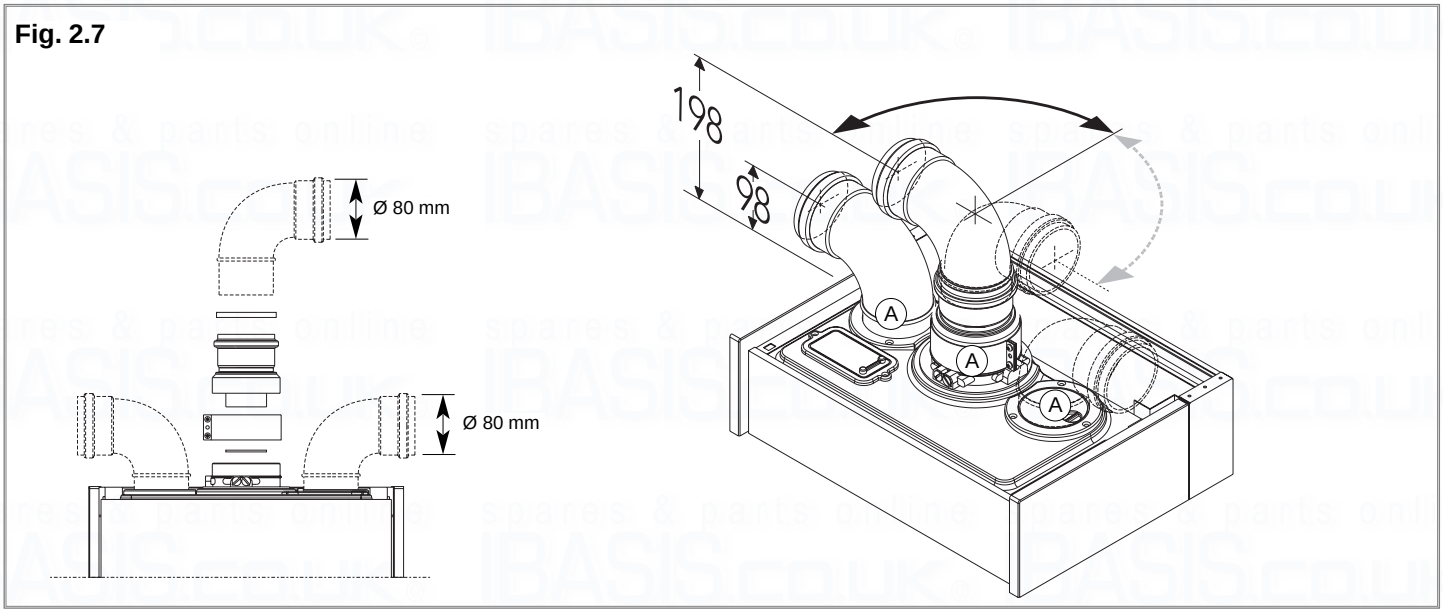

This procedure must be done as follows:

1 - Remove the air vent intake you want to use, in the area indicated in Fig. 2.8, by breaking the perforated ring.
2 - Use a tool to grasp the lid and remove it completely.
3 - Clean any burrs or sharp edges with a knife or an appropriate tool.

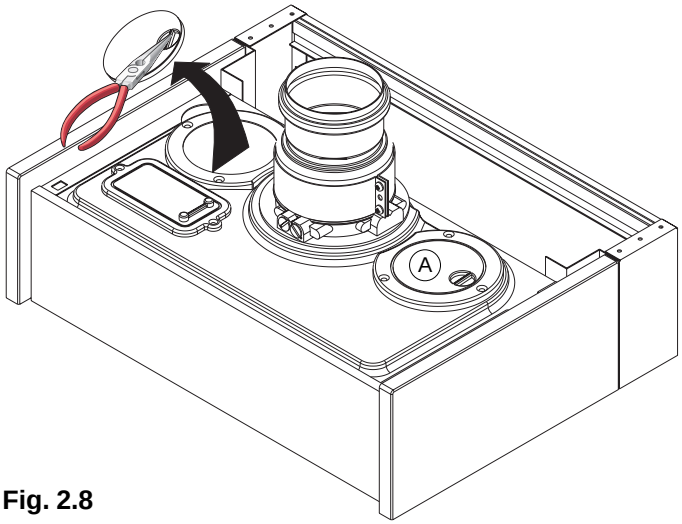

Fig. 2.8

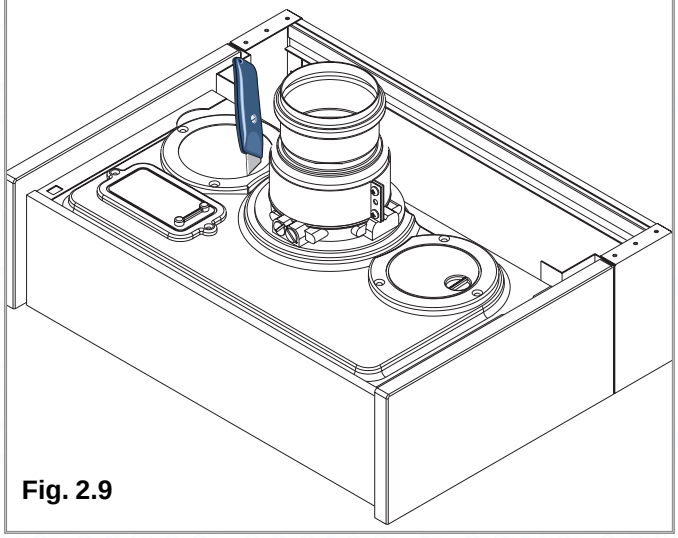

Fig. 2.9

In Fig. 2.10 below, several different types of flue systems are shown.
For additional information regarding the flue accessories, please consult the Flue Pipe Accessories manual.

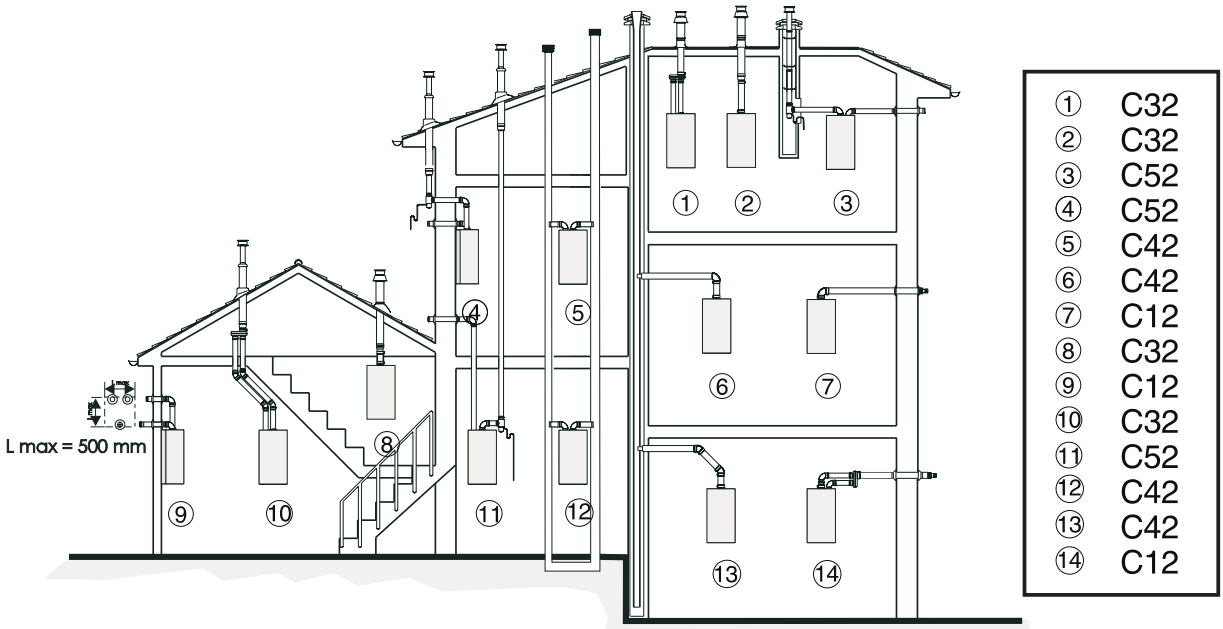

Fig. 2.10

	Exhaust Type	Maximum Extension Exhaust/Air		Diameter of Pipes (mm)	Use of a Restrictor on the Discharge Side	Risk of Condensation Forming
Coaxial System	C12 (xx)	4 m		ø 60 /100	L* < 0.5 m	
	C32 (xx)	4 m		ø 60 /100	L* < 0.5 m	
	C42 (xx)	4 m		ø 60 /100	L* < 0.5 m	
Twin Pipe Systems		**23 kW**	**27 kW**			
	C12 (xy)	54 m	46 m	ø 80	L < 7 m (23 kW) L < 5 m (27 kW)	L > 4 9 m (23 kW) L > 6.5 m (27 kW)
	C32 (xy)	54 m	46 m	ø 80	L < 7 m (23 kW) L < 5 m (27 kW)	L > 4.9 m (23 kW) L > 6.5m (27 kW)
	C42 (xy)	54 m	46 m	ø 80	L < 7 m (23 kW) L < 5 m (27 kW)	L > 4.9m (23 kW) L > 6.5m (27 kW)
	C52 (xy)	17 m	17 m	ø 80	L < 7 m (23 kW) L < 5 m (27 kW)	L > 4.9m (23 kW) L > 5.3m (27 kW)

(*) L = Length of Piping

In calculating the lengths of the pipes, the maximum length must also take into consideration the values for the exhaust/air intake end terminals, as well as 90° elbows for coaxial systems.

The C52 types must comply with the following requirements:

1. The discharge/intake vent pipes must have the same diameter of ø 80 mm.
2. The maximum combined flue length is 17 m. In this case the minimum length for the air intake pipe is 1 meter; the maximum length of vertical exhaust pipe must be a maximum of 12 m.
3. If an elbow is inserted into the discharge/ventilation system, the calculation of the overall extension must take into consideration the values for each curve, as indicated in the table.
4. The exhaust pipe must extend at least 0.5 m above the ridge of the roof if it is located on a side other than that for the air intake (this is not obligatory if the exhaust and air intake pipes are located on the same side of the building).

2.10 Room Thermostat Connection

In order to perform this procedure, remove boiler cover as indicated in section 3.2. Then proceed as follows:

1 Remove the screws “A” located on the bottom part of the boiler;
2 Widen the sides so that the control panel can be rotated.
3 Open the cover “B” on the left hand side of the compartment.
4 Insert the wire for the connection of the room thermostat into the wire holder “C”, as indicated in photo 3.

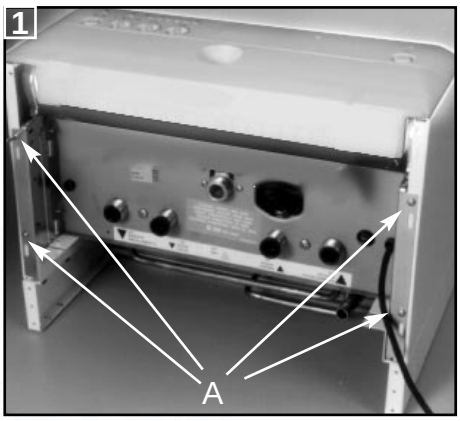

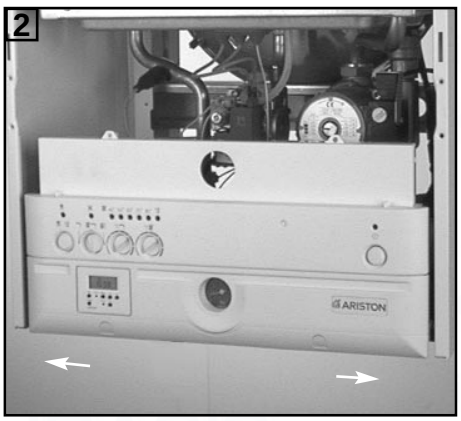

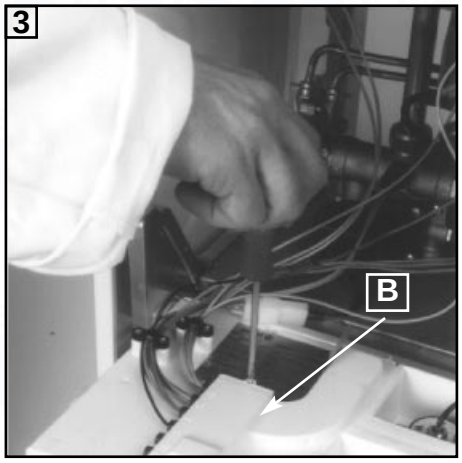

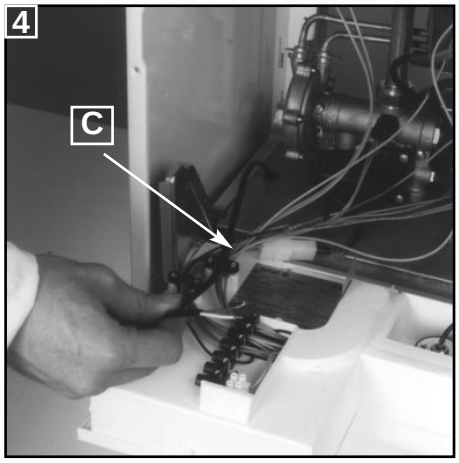

5 Remove the grommet “D” shown in photo 5, make a hole in it and pass the room thermostat wire through.
6 Remove the link located on the terminal and connect the wire.
7 Replace the grommet and the terminal to their original positions, close the cover on the grommet compartment and fasten the wire-clamp “C” in place.
8 If a remote time clock is to be fitted, disconnect the integral time clock plug from the P.C.B.
9 Using a volt-free switching time clock, connect the switching wires from the time clock following points 1-7 above.
10 If using a time clock and room thermostat, these must be connected in series as per points 1-9 above.

Note: Only a two-wire type room thermostat can be used.

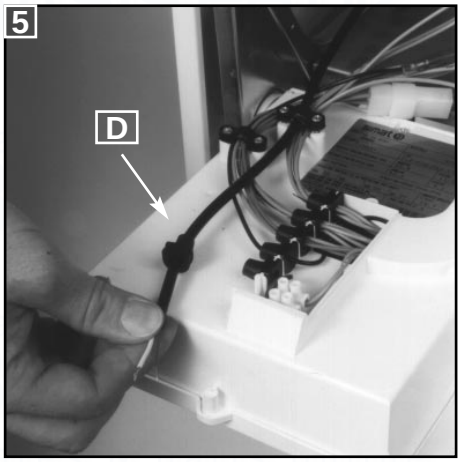

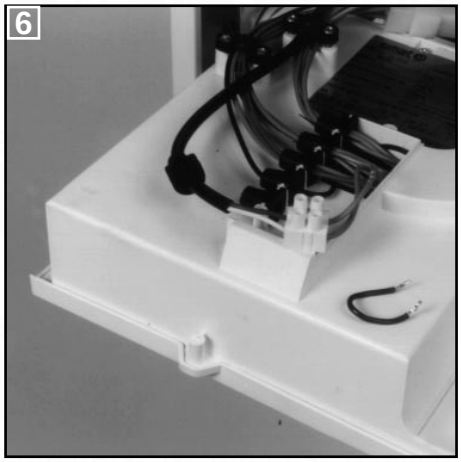

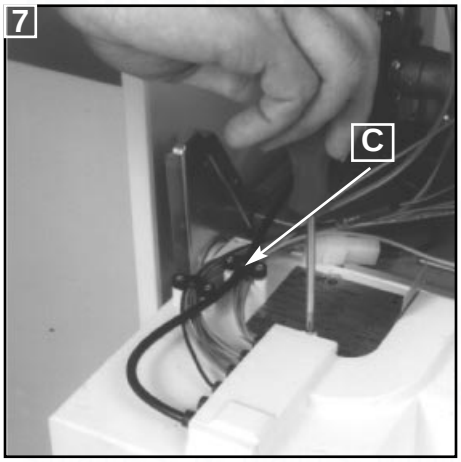

2.11 Electrical Diagram

Legend:

AT = High Voltage P.C.B.
BT = Low Voltage P.C.B.
B = Flame Failure L.E.D.
C = Insufficient Water Pressure L.E.D.
D = Water Temperature Indicator L.E.D.s
E = Overheat Thermostat Warning L.E.D.
F = System Reset Button
G = Selector Knob for Operating Mode
H = Domestic Hot Water Temp. Adjustment
I = Central Heating Temp. Adjustment
J = Wire Connector for Room Thermostat
K = Connector for Total Check System
M = Anti-cycling Device Adjustment for Heating
N = Soft-light Adjustment
O = Max Heating Temperature Adjustment
P = Time Clock Connection
Q = On/Off L.E.D.
R = On/Off Switch
S = Interface Wire for P.C.B.s
T = Relay Motorised Valve
U = Ignitor Relay
V = Gas Valve Relay
W = Fan Relay
X = Circulation Pump Relay
Aa = Adaptor (British Gas use only)
Y = Selector TCS2

A01 = Air Pressure Switch
A02 = Fan
A03 = Gas Valve
A04 = Ignitor
A05 = Motorised Valve
A06 = Circulation Pump
A07 = Flame Detector
A08 = Earth Terminal
A09 = Flame Detection Circuit
A10 = Flame Indicator L.E.D.
A11 = Transformer
A12 = Filter

B01 = Over Heat Thermostat
B02 = Room Thermostat
B03 = Gas Valve Modulator
B05 = Heating Sensor
B06 = Pressure Switch for Heating Circuit
B07 = Microswitch for Diverter Valve

Colours

Gry = Grey
Rd = Red
Bl = Blue
Grn/Yll = Yellow/Green
Wh = White
Brn = Brown
Blk = Black
Wh/Rd = White/Red

s.p.a.r.e.s. & p.a.r.t.s. o.n.l.i.n.e. BASIS.co.uk

A/23 MFFI - A/27 MFFI

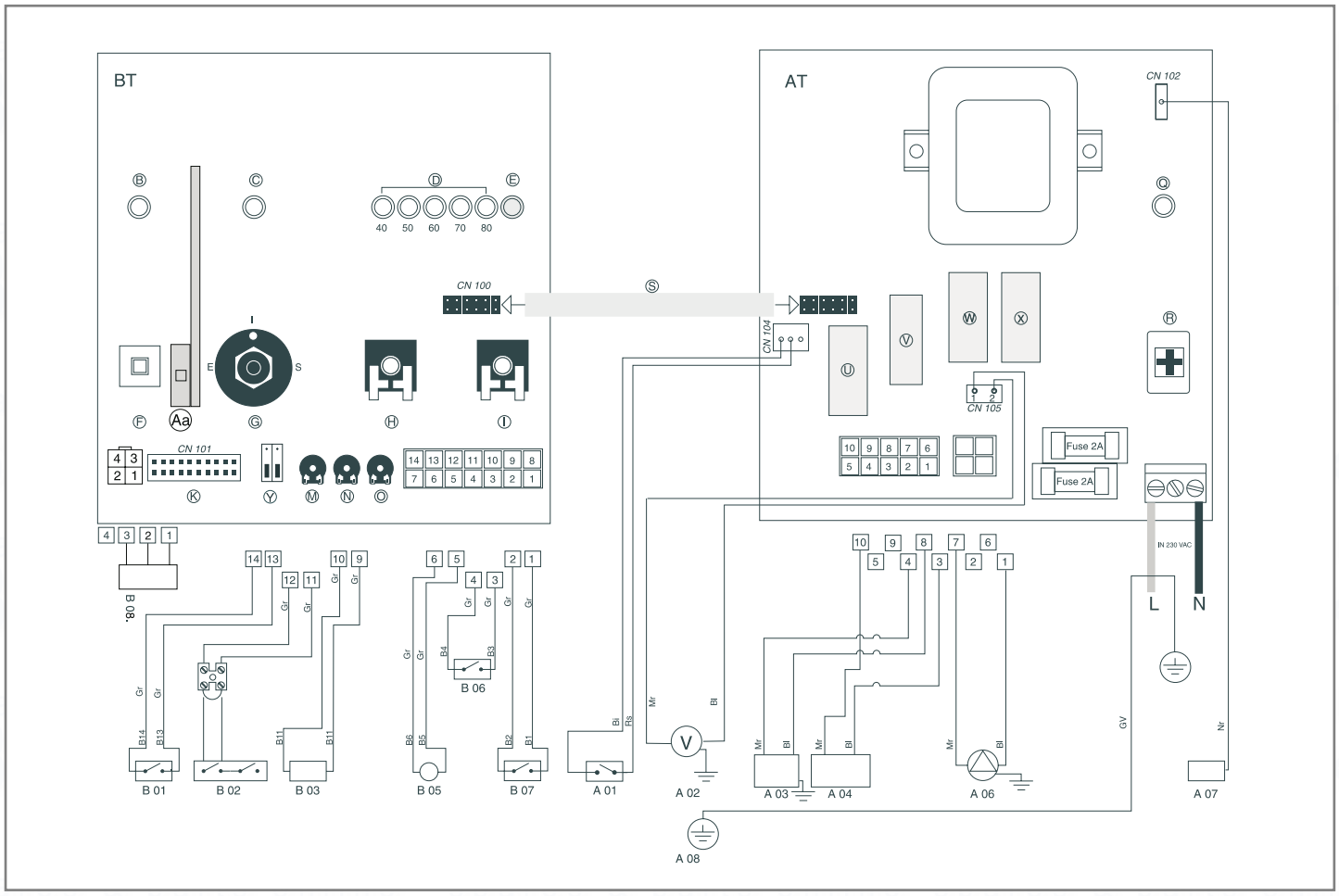

A/23 MFFI - A/27 MFFI

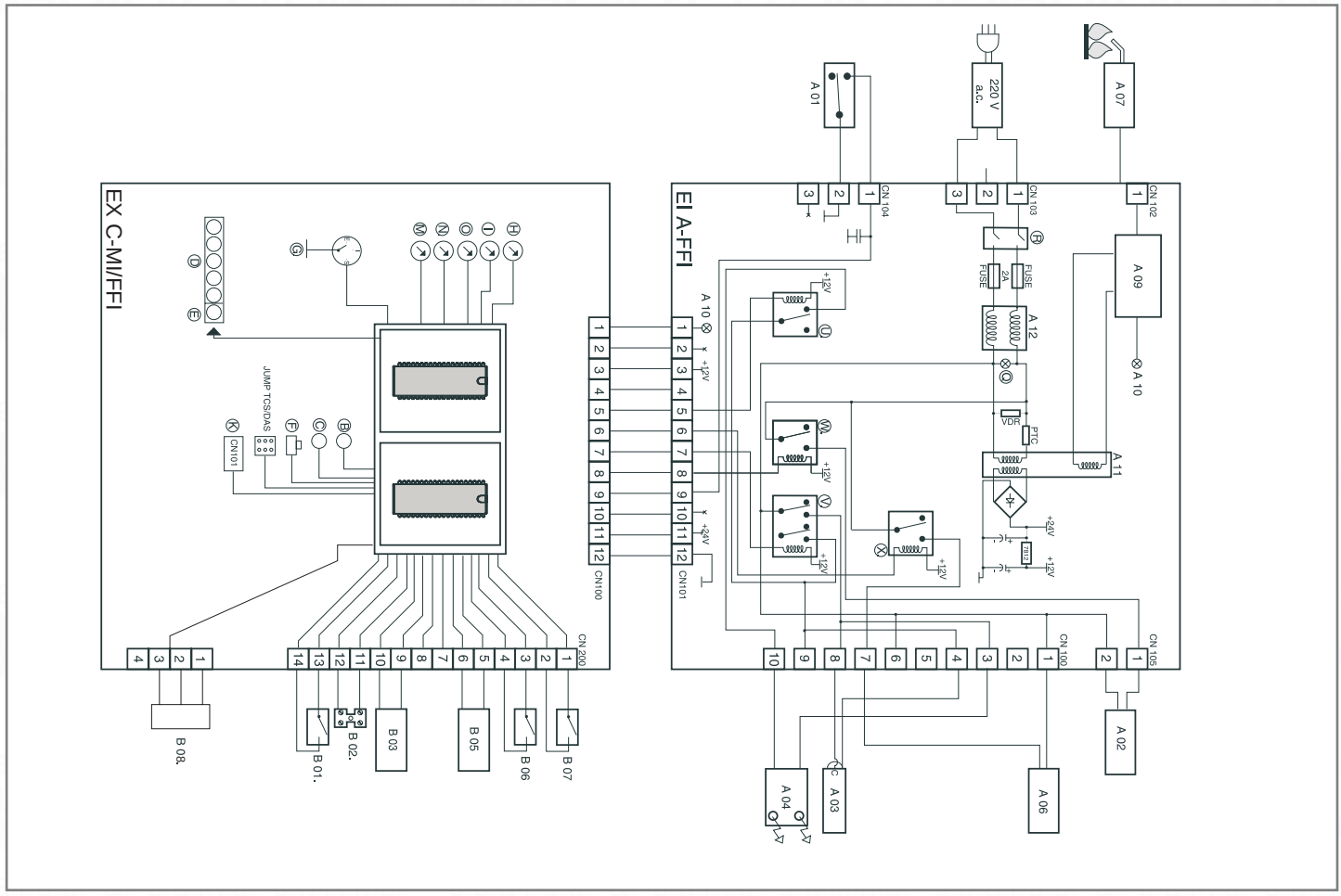

2.12 Water Circuit Diagram

A/23 MFFI - A/27 MFFI

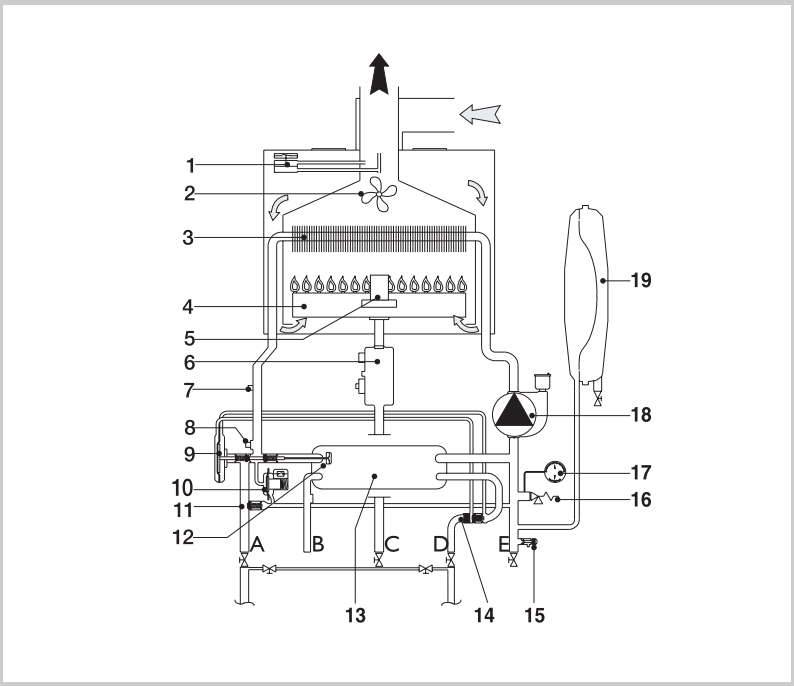

Legend

1. Air Pressure Switch
2. Fan
3. Main Heat Exchanger
4. Main Burner
5. Ignition Electrodes
   Detection Electrode
6. Gas Valve
7. Overheat Thermostat
8. Main Circuit Temperature Probe
9. Diverter Valve
10. Main Circuit Flow Switch including Safety Pressure Switch for Primary Circuit
11. Automatic By-pass
12. Microswitch for Diverter Valve
13. Secondary Heat Exchanger
14. Domestic Water Inlet Filter
15. Boiler Drain Valve
16. Safety Valve
17. Water Pressure Gauge
18. Circulation Pump with Automatic Air Release Valve
19. Expansion Vessel

3 COMMISSIONING

3.1 Initial Preparation

Preliminary electrical system checks to ensure electrical safety must be carried out by a competent person i.e. polarity, earth continuity, resistance to earth and short circuit.

Filling the Heating System:

Remove the panels of the case and lower the control panel (see point 3.2. for further information).
Open the central heating flow and return cocks supplied with the connection kit.
Unscrew the cap on the automatic air release valve one full turn and leave open permanently.
Close all air release valves on the central heating system.
Gradually open valve(s) at the filling point (filling-loop) connection to the central heating system until water is heard to flow, do not open fully.
Open each air release tap starting with the lower point and close it only when clear water, free of air, is visible.
Purge the air from the pump by unscrewing anticlockwise the pump plug and also manually rotate the pump shaft in the direction indicated by the pump label to ensure the pump is free.
Close the pump plug.
Continue filling the system until at least 1 bar registers on the pressure gauge.
Inspect the system for water soundness and remedy any leaks discovered.

Filling of the D.H.W. System:

Close all hot water draw-off taps.
Open the cold water inlet cock supplied with the connection kit.
Open slowly each draw-off tap and close it only when clear water, free of bubbles, is visible

Gas Supply:

Inspect the entire installation including the gas meter, test for soundness and purge, all as described in BS 6891:1988.
Open the gas cock (supplied with the connection kit) to the appliance and check the gas connector on the appliance for leaks.

When the installation and filling are completed turn on the central heating

system (sect. 3.4) and run it until the temperature has reached the boiler operating temperature. The system must then be immediately flushed through.
The flushing procedure must be in line with BS 7593:1992 Code of practice for treatment of water in domestic hot water central heating systems.
During this operation, we highly recommend the use of a central heating flushing detergent (Fernox Superfloc or equivalent), whose function is to dissolve any foreign matter that may be in the system.
Substances different from these could create serious problems to the pump or other components.
The use of an inhibitor in system such as Fernox MB-1 or equivalent is strongly recommended to prevent corrosion (sludge) damaging the boiler and system.
Failure to carry out this procedure may invalidate the appliance warranty.

3.2 Removing the Front Panel

To remove the front panel of the casing, proceed as follows:
1. Remove the screw “F” located on the top edge of the panel.
2. Lift and unhook the panel.

3.3 Control Panel

A/23 MFFI - A/27 MFFI

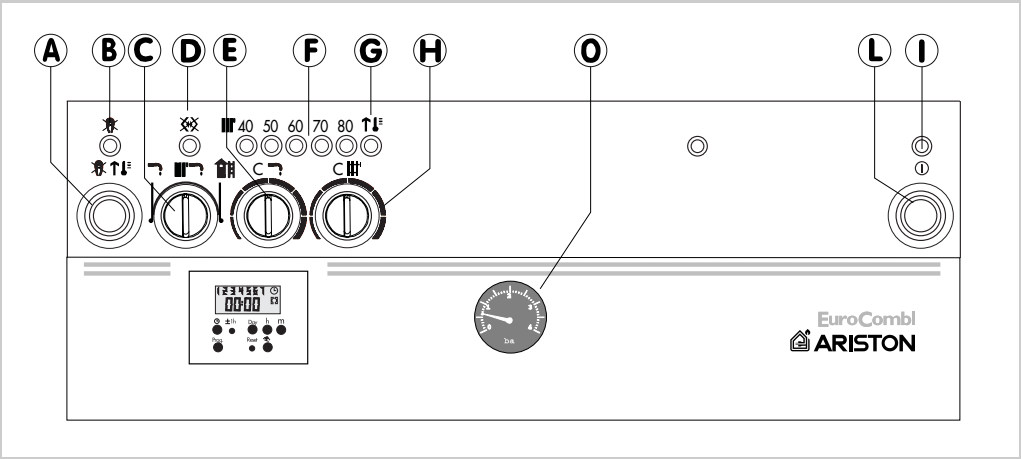

A - Ignition Lockout Reset Button/Safety (Overheat)Thermostat Reset
B - Ignition Lockout L.E.D.
C - Selector Knob for *Summer/Winter/Flue Analysis Modes**
D - Low System Water Level L.E.D.
E - Temperature Adjustment Knob for Domestic Hot Water
F - Heating System Thermometer
G - Safety (Overheat)Thermostat Intervention L.E.D.
H - Adjustment Knob for Heating Temperature
I - On/Off L.E.D.
L - On/Off Switch
O - System Pressure Gauge

** Warning the flue analysis mode must only be selected by a qualified service engineer.*

3.4 Initial Start-up

The checks to be run before initial start-up are as follows:

1. Make sure that:
   - the screw on the automatic air valve has been loosened when the system is full;
   - If the water pressure in the system is below 1 bar, bring it up to the appropriate level;
   - Check to see whether the gas cock is closed;
   - Make sure that the electrical connection has been made properly and that the earth wire is connected to an efficient earthing system;
   - Supply power to the boiler by pressing the On/Off switch <L> - the L.E.D. “I” will turn on - turn the selector knob “C” to the <*winter*> setting. This will start the circulation pump. After 7 seconds, the boiler will signal a shut-down due to failure ignition. Leave the boiler as it is until all of the air has been bled from the lines.
   - Loosen the cap on the head of the pump to eliminate any air pockets;
   - Repeat the procedure for bleeding the radiators of air;
   - Open the taps for a brief period;
   - Check the system pressure and, if it has dropped, open the filling-loop again to bring the pressure back up to 1 bar.
2. Check the exhaust flue for the fumes produced by combustion.
3. Make sure that all gate valves are open;
4. Turn on the gas cock and check the seals on the connections, including the one for the burner, making sure that the meter does not signal the passage of gas. Check the connections with a soap solution and eliminate any leaks.
5. Press the reset button “A” for the lighting system; the spark will light the main burner. If the burner does not light the first time, repeat the procedure.
6. Check the minimum and maximum pressure values for the gas going to the burner; adjust it if needed using the values indicated in the table in section 4.
   (See the relative section for burner pressure adjustment within the servicing manual).

3.5 Operational Adjustments

The boiler was designed to make it easy to regulate and check the various features. To access the areas where the adjustment and control devices are located, simply remove the plugs by pressing from the inside, unscrew the screws “A” and remove the bottom part of the instrument panel, rotating it upward.

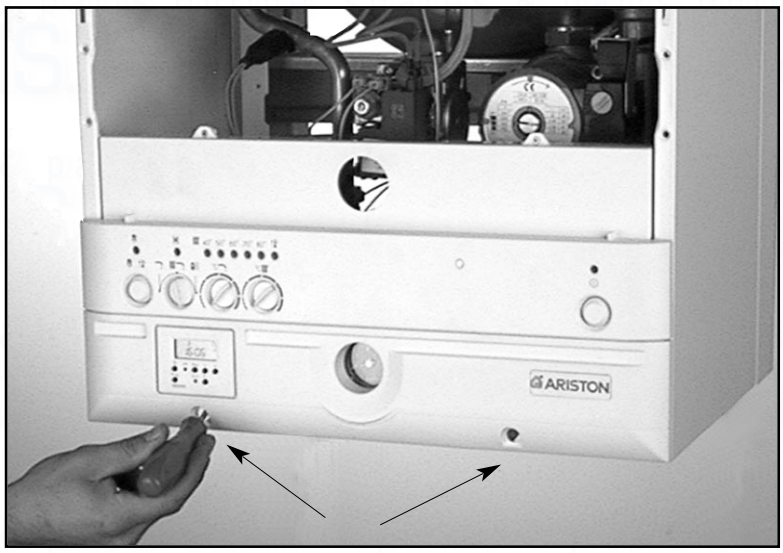

Right hand side service panel also provides access to:
- the power supply cord connector;
- the fuses.

Left hand side:
- the potentiometer for regulating the ignition delay (anti-cycling) feature, which can be set from 0 to 2 minutes (factory set at 1 minute);
- the potentiometer for regulating the soft-light feature, the setting for which can range from the minimum thermal power to the maximum:

G20	5.5 mm c.a.
G25	4.5 mm c.a.
G30-31	1.8 mm c.a.

- the potentiometer for the maximum thermal power for the heating system, maximum thermal power setting (factory set at the maximum value, unless indicated otherwise on the adhesive sticker located in proximity to the potentiometer);
- The connection for the diagnostic device (TCS-TCS2).

3.6 Combustion Analysis

The boiler is designed to make it easy to analyse the combustion by-products.

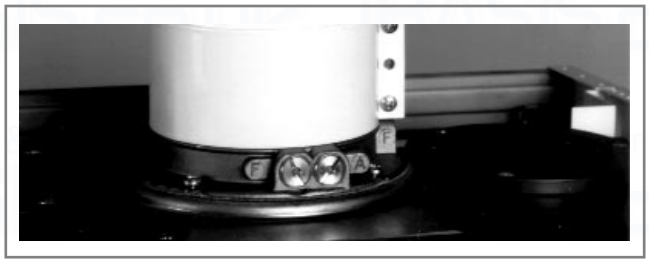

Using the especially designed apertures, readings can be taken on the temperature of the combustion by-products and of the combustion air, as well as of the concentrations of O_2 and CO_2, etc.

The best maximum-power test conditions for the heating system are when the selector “C” is turned to the flue analysis setting.

3.7 Fume Discharge Monitoring

The discharge/ventilation of the exhaust fumes can be monitored to check for losses in general pressure in the system. This is done to eliminate the cause of lighting failure with the main burner not indicated by a shutdown status.
With a differential manometer connected to the test socket on the combustion chamber, the DP value for the air pressure switch can be taken. The measured value should not be less than 10 mbar under maximum thermal power conditions (with the knob “C” on the flue test setting) in order for the unit to function properly and without interruption.

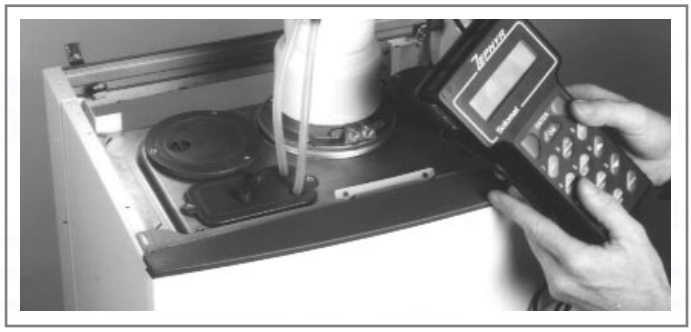

3.8 Boiler Safety Systems

The boiler is equipped with the following safety systems (see section 3.3 for references):

1 - Ignition Failure

This control signals an ignition failure on the burner 7 seconds after a lighting failure. The L.E.D. “B”.will turn on to signal the shutdown status.
The system can be reset by pressing and releasing the button “A” after checking to make sure that the gas valve is open. Repeat this process until the burner lights.

2 - Circulation Failure

This control signals that the safety pressure switch on the primary circuit has not sensed a pressure of at least 1 bar within 40 seconds of the activation of the circulation pump, it shuts off the boiler and lights the L.E.D. “D”. The system can be reset (after the pressure has been brought up to the proper level) by using the On/Off switch “L”.

3 - Overheating

This control shuts off the boiler in the case where the primary circuit reaches a temperature in excess of 110°C. The L.E.D. “G” will come on to signal this shut

off status. After the system has been allowed to cool, the system can be reset by pressing the button “A”.

4 - Limescale Build-up

This is an indirect control (actuated through the regulation of the temperature in the primary heat exchanger) on the formation of limescale in the secondary heat exchanger. Regardless of the flow rate and the temperature in the circuit for the domestic hot water, the temperature is limited to 62°C.

5 - Safety Shut-off

At the start of every lighting phase, the P.C.B. performs a series of internal controls. If a malfunction occurs, the boiler will shutdown until the problem has been resolved.

3.9 Draining the System

Draining the heating system.

The heating system must be emptied as follows:

- Turn off the boiler;
- Open the drain valve for the system and place a container below to catch the water that comes out;
- Empty the system at the lowest points (where present). If you plan on not using the heating system for an extended period of time, it is recommended that you add antifreeze with an ethylene glycol base to the water in the heating lines and radiators if the ambient temperature drops below 0°C during the winter.
  This makes repeated draining of the entire system unnecessary.

Draining the domestic hot water system.

Whenever there is the danger of the temperature dropping below the freezing point, the domestic hot water system must be drained as follows:

- Turn off the general water valve for the household plumbing system;
- Turn on all the hot and cold water taps;
- Empty the remaining water from the lowest points in the system (where present).

4. GAS ADJUSTMENTS

CATEGORY II2H3+		Methane Gas G20	Liquid Butane Gas G30	Liquid Propane Gas G31
Lower Wobbe Index (15°C;1013mbar)	MJ/m^{3}h	45.67	80.58	70.69
Nominal Delivery Pressure	mbar	20	30	37
Minimum Delivery Pressure	mbar	17	20	25
A/23 MFFI				
Main Burner: n. 13 jets (ø)	mm	1.,25	0.72	0.72
Consumption (15°C; 1013mbar)	mc/h	2.72	----	----
Consumption (15°C; 1013mbar)	Kg/h	----	2.02	2.02
Gas Cock Outlet Pressure min - max	mbar	11.4- 2.0	27.5 (*) - 5.2	35.0 (*) - 7.0
A/27 MFFI				
Main Burner: n. 15 jets (ø)		1.25	0.72	0.72
Consumption (15°C; 1013mbar)	mc/h	3.16	----	----
Consumption (15°C; 1013mbar)	Kg/h	----	2.35	2.32
Gas Cock Outlet Pressure: max - min	mbar	11.6-2.2	(*) - 4.8	(*) - 6.0

(1mbar = 10,197 column of water)

The outlet pressure of the gas cock is obtained by completely loosening the screw on the solenoid. The maximum pressure of the gas to the burner will be equal to the nominal delivery pressure minus the head loss within the gas valve.

4.1 Changing the Type of Gas

The boiler can be converted to use either methane (natural) gas (G20) or LPG (G30 - G31) by an Authorised Service Centre.

The operations that must be performed are the following:

1. Replace the jets on the main burner (see table in section 4);
2. Adjust the maximum and minimum thermal capacity values for the boiler (see table in section 4);
3. Replace the gas rating plate;
4. Adjust the maximum thermal power setting;

CATEGORY II2H3+	Methane Gas G20	Liquid Butane Gas G30	Liquid Propane Gas G31
Recommended Soft-Light Pressure (mbar)	5-5.5	17 - 18	18 - 19

5. Adjust the soft-light feature;
6. Adjust the ignition delay feature for the heating system (can be set from 0 to 2 mins.).

5. MAINTENANCE

It is recommended that the following checks be made on the boiler at least once a year:

1 - Check the seals for the water connections; replacement of any faulty seals.
2 - Check the gas seals; replacement of any faulty gas seals.
3 - Visual check of the entire unit.
4 - Visual check of the combustion process and cleaning of the burners if needed.
5 - If called for by check no. 3, dismantling and cleaning of the combustion chamber.
6 - If called for by check no. 4, dismantling and cleaning of the injectors.
7 - Visual check of the primary heat exchanger:
- check for overheating in the blade assembly;
- clean the exhaust fan if needed.

8 - Adjustment of the flow rate of the gas: flow rate for lighting, partial load and full load.
9 - Check of the heating safety systems:
- safety device for maximum temperature;
- safety device for maximum pressure.

10 - Check of the gas safety systems:
- safety device for lack of gas or flame (detection electrode);
- safety device for gas cock.

11 - Check of the electrical connection (make sure it complies with the instructions in the manual).
12 - Check of domestic hot water production efficiency (delivery rate and temperature)
13 - Check of the general performance of the unit.
14 - General check of the discharge/ventilation of the combustion by-products.

6. MISCELLANEOUS

6.1 Wiring Diagram for Two Heating Zones

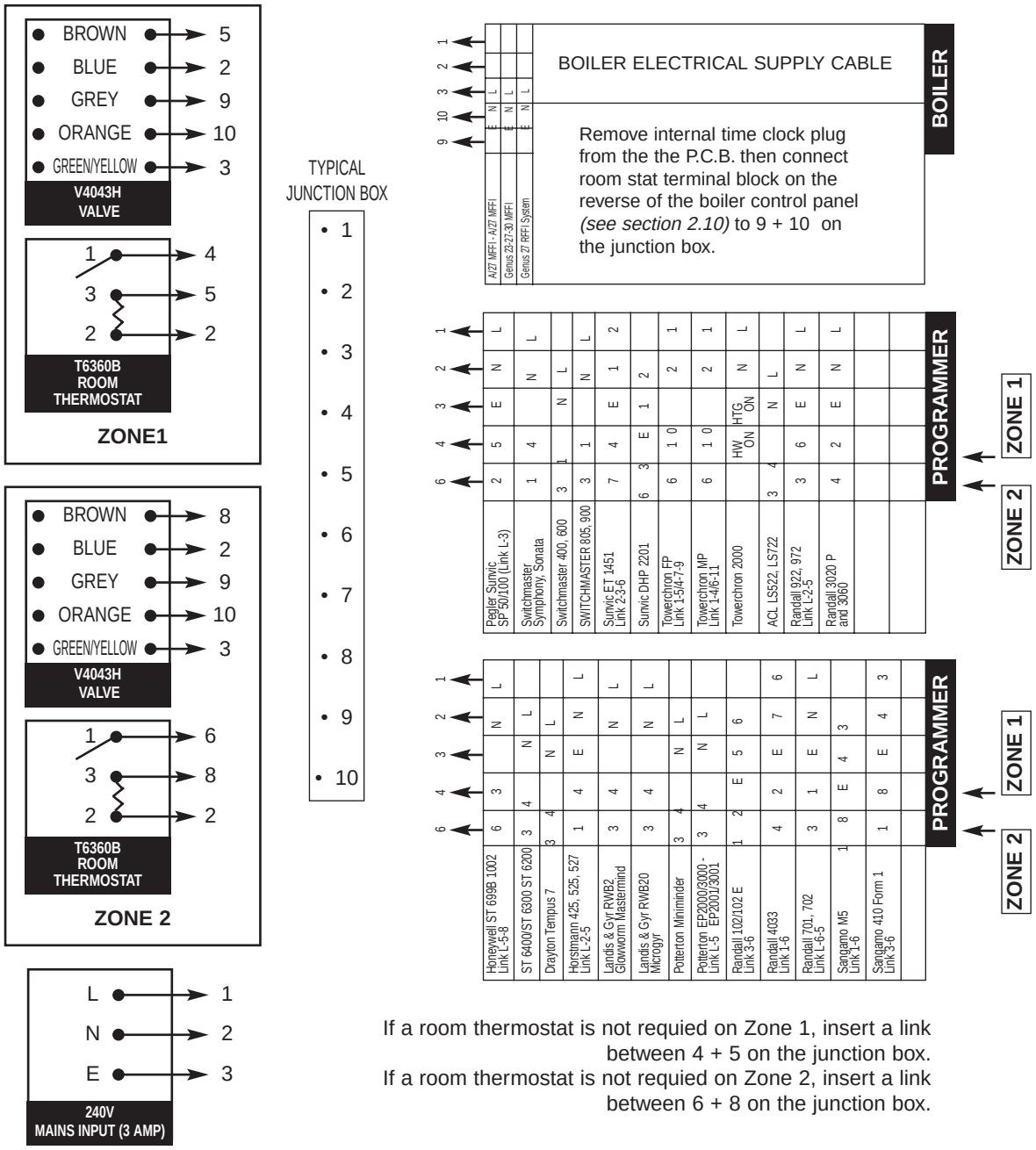

If a room thermostat is not requied on Zone 1, insert a link between 4 + 5 on the junction box.
If a room thermostat is not requied on Zone 2, insert a link between 6 + 8 on the junction box.

Based on Honeywell controls

6.2 Wiring Diagram for Connection to Ariston Unvented Cylinder

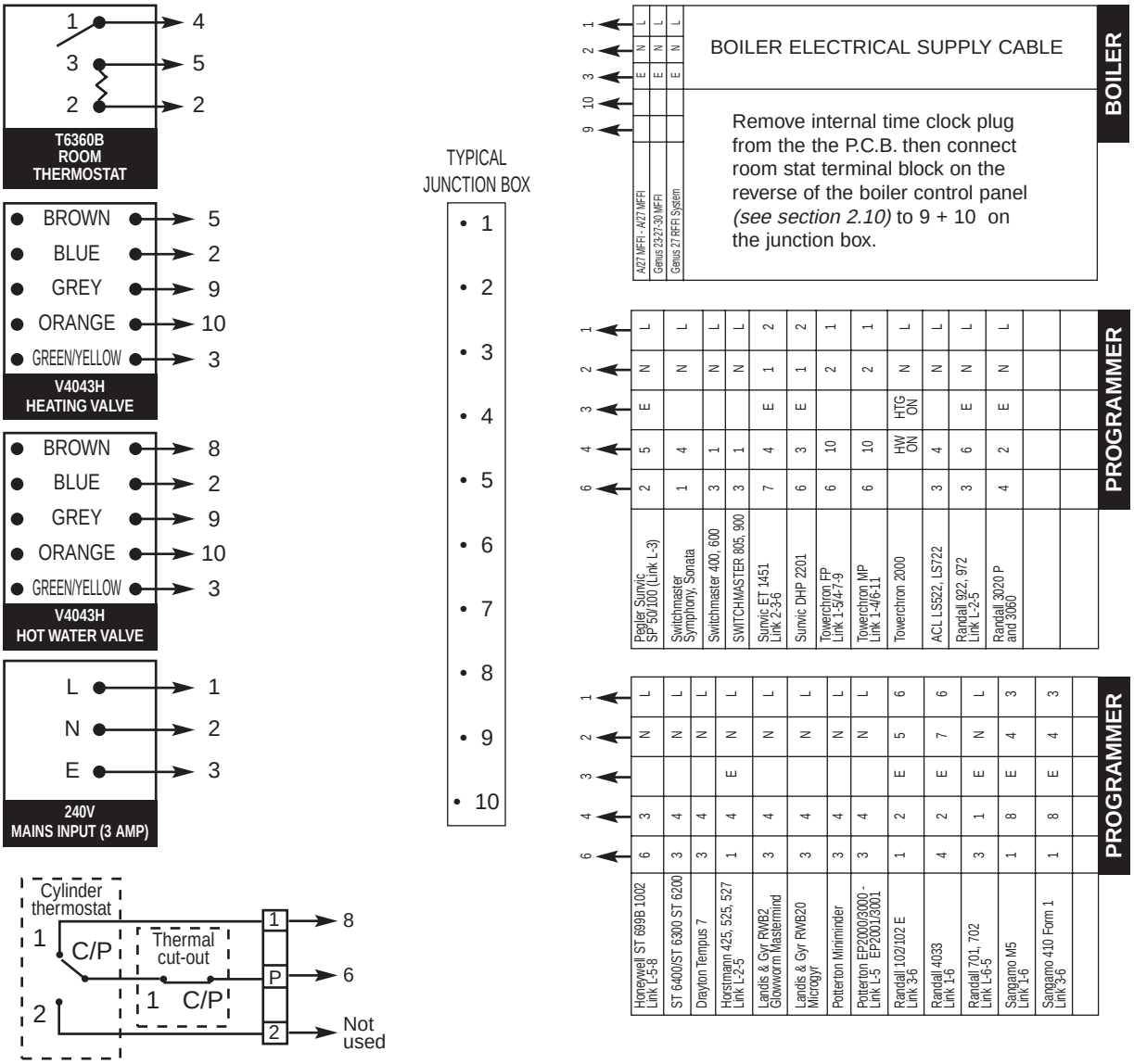

Based on Honeywell controls

NOTES

NOTES

spares & parts online
IBASIS.CO.UK

spares & parts online IBASIS.CO.UK

Manufacturer: **Merloni TermoSanitari SpA - Italy**

Commercial subsidiary: **MTS (GB) LIMITED**
MTS Building
Hughenden Avenue,
High Wycombe
Bucks HP13 5FT
Telephone: (01494) 755600 -
Fax: (01494) 459775
Technical Service Hotline: (01494) 539579

STAMPA: Azienda Grafica BIEFFE srl - Recanati

Cod. 23 99 84 1260 112 - B023