GENUS 30PLUS

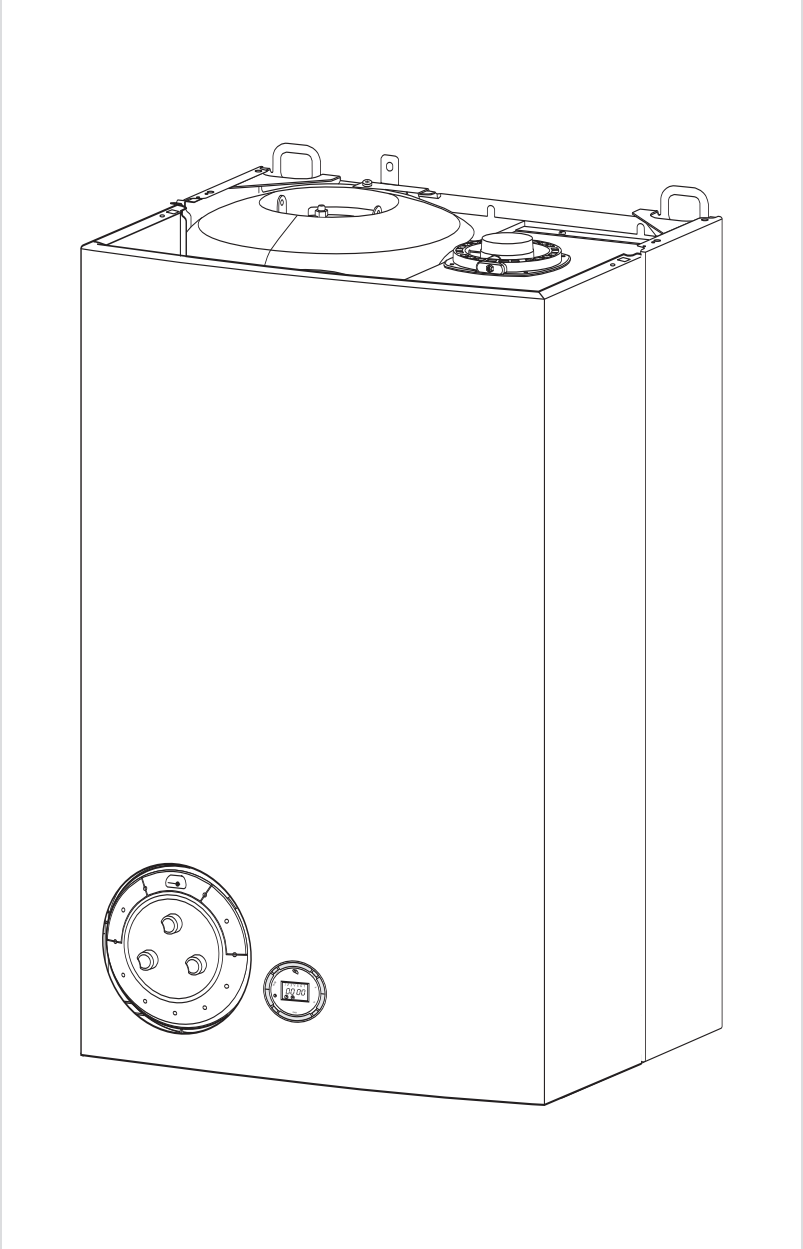

End User, Installation & Servicing Instructions Type C Boilers

G.C.N: **47-116-28**

LEAVE THESE INSTRUCTIONS WITH THE END USER

benchmark

The code of practice for the installation, commissioning & servicing of gas fires and wall heaters

GB IE

CE

ARISTON

spares & parts online IBASIS.CO.UK

TABLE OF CONTENTS

1. General Information

2. Control Panel

3. How to Use

4. Anti-Frost Device

5. Maintenance

6. Trouble Shooting

7. Filling Instructions

8. Time Clock
8.1 Setting the Mechanical Clock
8.2 Setting the Digital Clock

9. General Information for the Installer
9.1 Overall View

10. Installation
10.1 Delivery
10.2 Reference Standards
10.3 Siting the Appliance
10.4 Clearances
10.5 Overall View
10.6 Mounting the Appliance
10.7 Electrical Connection
10.8 Gas Connection
10.9 Water Connections

11. Connecting the Flue
11.1 Flue Connections
11.2 Fitting the Coaxial Flue (Ø 60/100 mm - Horizontal)
11.3 Fitting the Telescopic Flue (Ø 60/100 mm - Horizontal)
11.4 Fitting the Coaxial Flue (Ø 60/100 mm - Vertical)
11.5 Fitting the Twin Pipe (Ø 80/80 mm)

12. Electrical Connections

13. Electrical System Diagrams

14. Water Circuit Diagrams

15. Commissioning
15.1 Initial Preparation
15.2 Completion
15.3 Removal and Fitting of the Case - Servicing
15.4 Control Panel
15.5 Initial Start-Up
15.6 Sequence of Operation
15.7 Operational Adjustments
15.8 Combustion Analysis
15.9 Boiler Safety Systems

16. Gas Adjustments
16.1 Changing the Type of Gas

17. Maintenance

18. Servicing Instructions
18.1 Replacement of Parts

18.2 To Gain General Access
18.2.1 Removing the front panel
18.2.2 Removing the control panel

18.3 Access to the Control System
18.3.1 Removing the main PCB
18.3.2 Removing the display PCB
18.3.3 Removing the fuses
18.3.4 Removing the programmer

18.4 Access to the Sealed Chamber
18.4.1 Removing the sealed chamber front panel
18.4.2 Removing the combustion chamber front panel
18.4.3 Removing the burner
18.4.4 Removing the electrodes
18.4.5 Removing the burner manifold
18.4.6 Removing the main exchanger
18.4.7 Removing the air pressure switch
18.4.8 Removing the fan

18.5 Access to the Gas Valve
18.5.1 Removing the spark generator
18.5.2 Removing the gas valve

18.6 Access to the Water Circuit
18.6.1 Drain down
18.6.2 Removing the display PCB
18.6.3 Removing the heating return filter
18.6.4 Removing the by-pass
18.6.5 Removing the pressure relief valve (3 bar)
18.6.6 Removing the pressure relief valve (6 bar)
18.6.7 Removing the temperature & pressure relief valve (7 bar)
18.6.8 Removing the pump
18.6.9 Removing the expansion vessel
18.6.10 Removing the overheat thermostat
18.6.11 Removing the heating temperature sensor
18.6.12 Removing the tank temperature sensor
18.6.13 Removing the DHW flow switch
18.6.14 Removing the DHW expansion vessel
18.6.15 Removing the flow limiter
18.6.16 Removing the tank

19. Fault Finding Guide

20. Short Spares List

21. Technical Information

Dear Customer,

Thank you for choosing an ARISTON boiler.

We guarantee that your boiler is a reliable and technically sound product.

The following Instructions provide detailed instructions and recommendations for proper installation, use and maintenance.

Remember to keep this manual in a safe place for future reference e.g. by the gas meter.

Your local MTS Servicing Centre is at your complete disposal for all requirements.

MTS (GB) Limited

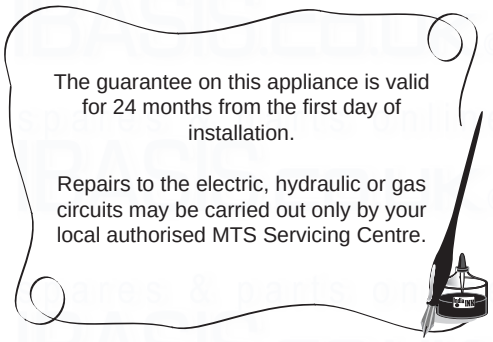

CAUTION

Installation, start-up, adjustments and maintenance must be performed by a competent person only, in accordance with the current Gas Safety (Installation & Use) Regulations and the instructions provided. Improper installation may cause damage or injury to individuals, animals and personal property, for which the manufacturer will not be held liable.
To ensure efficient and safe operation it is recommended that the boiler is serviced annually by a competent person.
If it is known or suspected that a fault exists on the appliance, it must not be used until the fault has been corrected by a competent person.

Every attempt has been made to avoid errors of any kind in this instruction manual, the Management invites customers to inform of any inaccuracies which they may find. This will help to improve our service.

IMPORTANT

Please read this manual carefully.

Please ensure this manual is kept with the appliance so that they can be used by the end-user, installer or our authorised engineer.

1. GENERAL INFORMATION

MTS (GB) Limited support the benchmark initiative. Your installer will give you, and show you how to use, a Log Book which will give you important information about your boiler and heating system. Please have this Log Book to hand whenever you contact a service engineer or us.

All CORGI Registered Installers carry a CORGI ID card, and have a registration number. Both should be recorded in your boiler Log Book. You can check your installer is CORGI registered by calling CORGI direct on :- (01256) 372300.

This is a combined appliance for the production of central heating (C.H.) and domestic hot water (D.H.W.). This appliance **must be used only** for the purpose for which it is designed. The manufacturer declines all liability for damage caused by improper or negligent use.

Do not allow children or inexperienced persons to use the appliance without supervision.

If you smell gas in the room, **do not turn on or off** light switches, use the telephone or any other object which might cause sparks.

Open doors and windows immediately to ventilate the room.

Shut the gas mains tap (on the gas meter) or the valve of the gas cylinder and call your Gas Supplier immediately.

If you are going away for a long period of time, remember to shut the mains gas tap or the gas cylinder valve.

Before any intervention within the boiler it is first necessary to cut off the electrical power supply by turning the external switch to the off position.

2. CONTROL PANEL

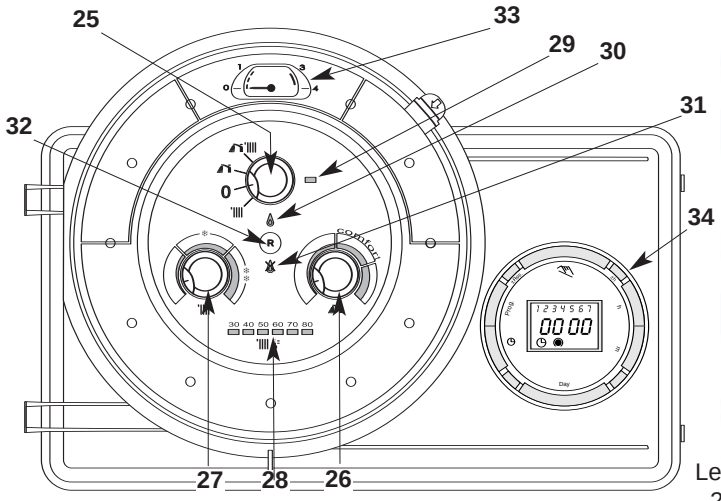

Legend:

25 - Selector Knob :

- Central Heating and Hot Water
- Hot Water Only
- O Stand-by
- Central Heating Only

26 - D.H.W. temperature control knob

27 - C.H. temperature control knob

28 - Heating temperature indicator and diagnostic indicator

29 - Green indicator - Power ON

30 - Orange indicator - Burner ON

31 - Red indicator - Lock out / flame failure

32 - Reset button

33 - Pressure gauge

34 - Time clock (digital model shown)

3. HOW TO USE

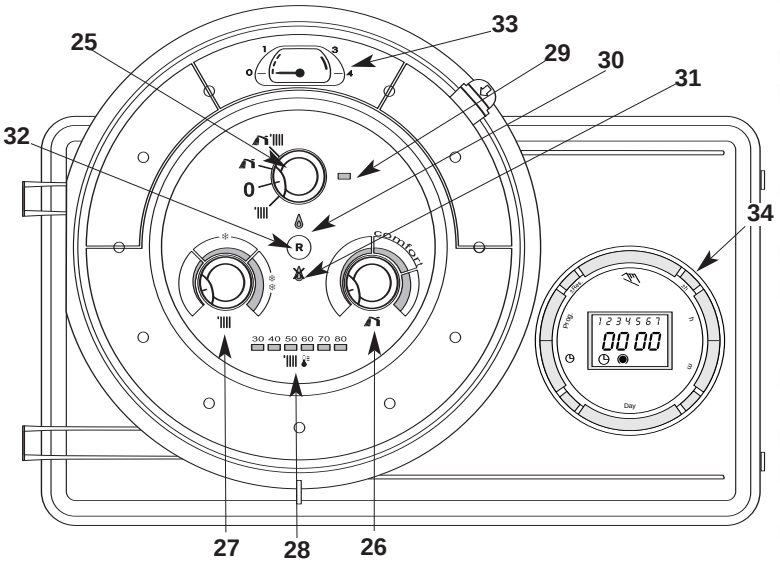

FIG. 3.1

FIG. 3.2

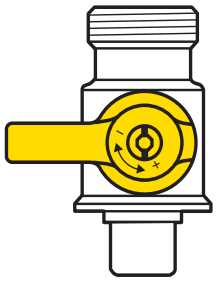

GAS COCK CLOSED

GAS COCK OPEN

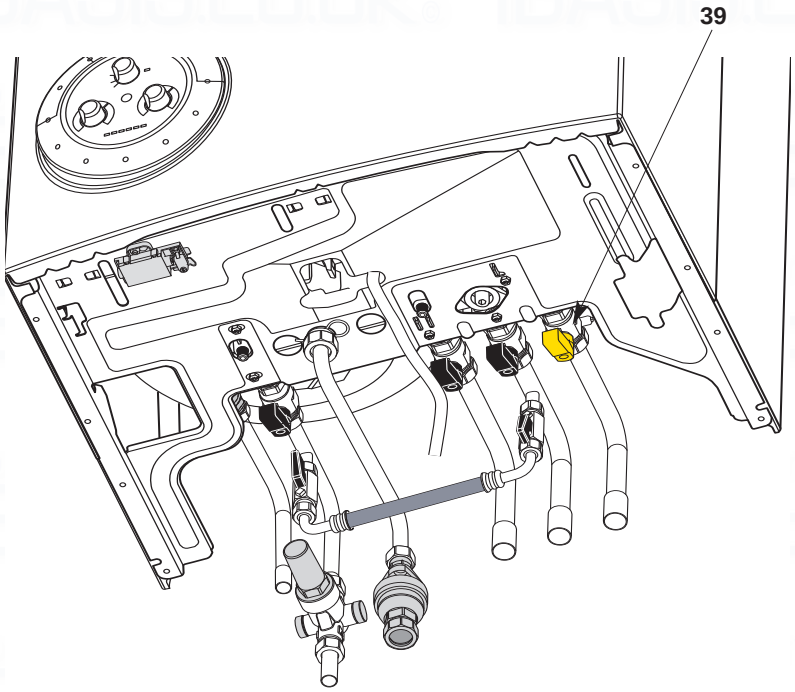

FIG. 3.3

Switching on

1. Check that the pressure in the heating system is adequate, i.e. the pressure gauge **33** shows 1 bar minimum and 1.5 bar maximum.
2. Check that the gas service tap **39 (Fig. 3.3)** is opened **(Figs. 3.1 and 3.2)** and that the mains power is on, the green indicator **29** will light.
   The boiler is now ready to use.

Note : If the boiler has been turned off for some time, the presence of air in the gas pipe may result in a lockout.

To obtain hot water only

- Turn the selector switch **25** to the « » position, the green LED **29** will light; the orange LED **30** will light to indicate that the burner is alight.
- To adjust the temperature of the domestic hot water, it is necessary to rotate the control knob **26** « » clockwise to increase and anti-clockwise to decrease the temperature until the desired temperature is achieved.

NOTE

On initial start-up, if the boiler has been switched off for any period of time or when the storage tank is emptied of hot water, it will be necessary for the storage tank to be heated before hot water can be drawn. It will also be necessary for occasional re-heating of the storage tank to maintain the temperature set on the hot water control knob **26** (this will happen automaticall as long as the boiler is powered, operating normally and the selector switch **25** is set to one of the hot water positions or).

To obtain central heating and domestic hot water

- Turn the selector switch **25** to the « » position, the green LED **29** will lightt; the orange LED **30** will light to indicate that the burner is alight.
- Upon a demand for domestic hot water the operation of the central heating will be interrupted until the hot water tank has been reheated to the set temperature.
- The control knob **27** « » allows you to adjust the water temperature in the central heating circuit according to seasonal requirements.
- Turn the control knob **27:**
- Clockwise in cold weather
- Anti-clockwise in mild weather (by turning the knob fully anti-clockwise, the Central Heating will switch off).
- The LEDs **28** will display the temperature of the water in the central heating circuit.
- Furthermore, your home must be fitted with a room thermostat, ensure it is set to the desired indoor temperature.
- The orange LED **30** will light each time the burner operates.

To obtain central heating only

- Turn the selector switch **25** to the « » position, the green LED **29** will light.
- Ensure that the time clock is on (see SECTION 8), and that the room thermostat is calling for heat.
- The control knob **27** « » allows you to adjust the water temperature in the central heating circuit according to seasonal requirements.
- Turn the control knob **27:**
- Clockwise in cold weather
- Anti-clockwise in mild weather (by turning the knob too far, the Central Heating will switch off).
- The LEDs **28** will display the temperature of the water in the central heating circuit.
- Furthermore, your home must be fitted with a room thermostat, set it to the desired indoor temperature.
- The orange LED **30** will light each time the burner operates.

Stopping the central heating

- Turn the selector switch **25** to the " " position. In this state the boiler will only produce domestic hot water, alternatively, you can turn the time clock off or turn the room thermostat down.

Stand-by mode

- Turn the selector switch **25** to the «**O** » position, the green LED **29** will remain alight. The appliance will remain in stand-by mode unless the anti-frost device is activated.

Turn off the appliance*

- Turn the selector switch **25** to the «**O**» position
- Turn off the external power supply to the boiler.

*** NOTE: IN THIS STATE THE APPLIANCES ANTI-FROST DEVICE IS INACTIVE**

4. ANTI-FROST DEVICE

The boiler is fitted with a device, which in the event that the water temperature falls below 8°C the pump activates and runs until a temperature of 18°C is attained. In the event that the water temperature falls below 3°C, the diverter valve switches to Domestic Hot Water and the burner fires on minimum power until a temperature of 33°C is attained.

This device is only activated when the boiler is operating perfectly and

- the system pressure is sufficient;
- the boiler is powered electrically;
- gas is available.

5. MAINTENANCE

Schedule an annual maintenance check-up for the boiler with a CORGI registered Service Engineeer in the UK and with a competent person as described in I.S.813 for IE.

Correct maintenance always results in savings in the cost of running the system.

6. TROUBLE SHOOTING

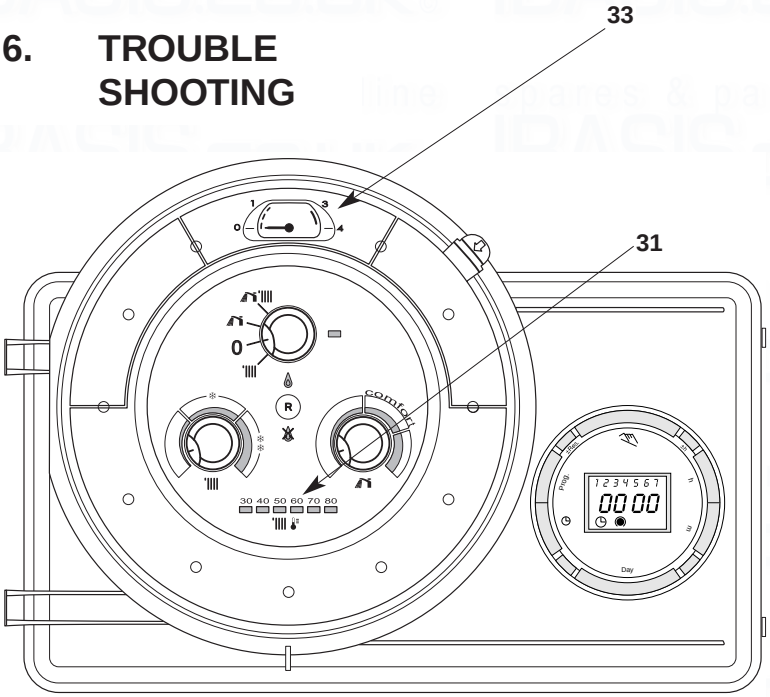

FIG. 6.1

Incorrect functions are signalled by the diagnostic indicator LED **31** display flashing. Contact your local authorised Servicing Centre (unless a low water fault is indicated, in which case refer to Section 7 for filling instructions).

7. FILLING INSTRUCTIONS

A method for initially filling the system and replacing lost water during servicing and initial filling (in accordance with current Water Regulations), is provided as an integral part of the connection kit (see Fig. 7.1).

To fill the system and replace lost water it is necessary to proceed as follows:

- Switch off the power to the boiler;
- Ensure that the flexible hose is connected to both the cold water inlet connection and the C.H. flow connection;
- Open the black lever on the valve for the C.H. return connection and slowly open the black handle on the valve for the cold water inlet until water is heard passing through the valves;
- Once the pressure gauge **33** (Fig. 6.1) reads between 1 and 1.5 bar close the levers on both the cold water connection and the C.H. return connection
- Switch the power to the boiler back on.

NOTE: THE FLEXIBLE HOSE MUST BE REMOVED ONCE THE SYSTEM HAS BEEN FILLED.

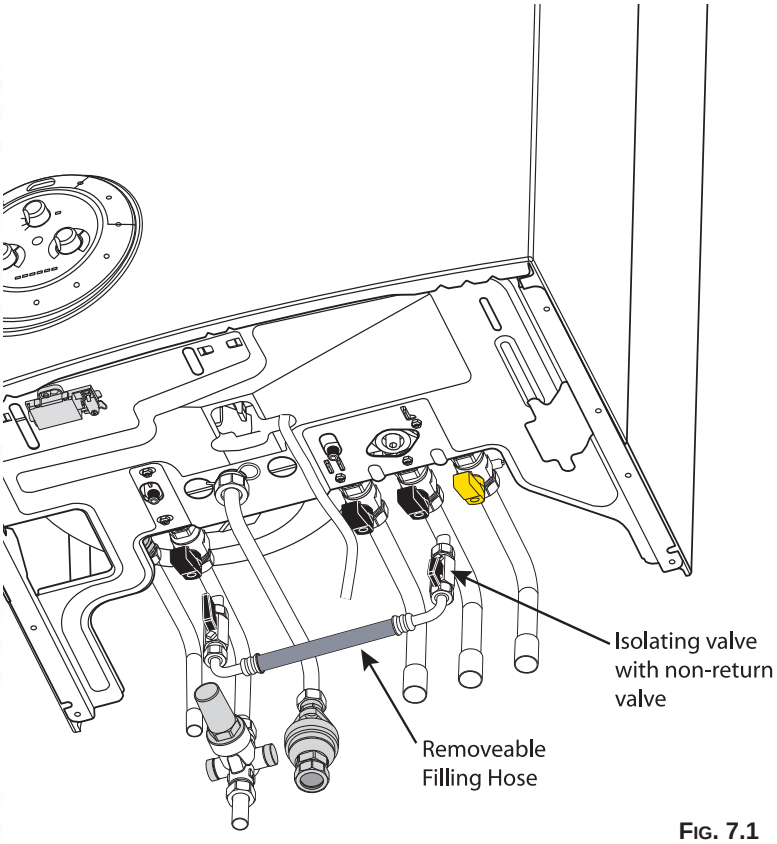

FIG. 7.1

8. TIME CLOCK

8.1 Setting the Mechanical Clock

1. General layout

The mechanical clock covers a 24 hour period. Each tappet represents 15 minutes **A** (Fig. 4). An override switch is located on the clock **B (Fig 8.1)**.

2. To set the time

To set the time of day, grasp the outer edge of the dial and turn slowly clockwise until the correct time is lined up with the arrow **C (Fig. 8.1)**.

3. To Set the "On" and "Off" times

The clock uses a 24hours system. e.g. 8 = 8.00 am and 18 = 6.00 pm "ON" periods are set by sliding all tappets between the "ON" time and the "OFF" time to the outer edge of the dial.The tappets remaining at the centre of the dial are the "OFF" periods.

4. For operation

Put the selector switch **B** to the ⏲ symbol to control the central heating by the clock. Put the switch **B** to «**I**» to select permanent operation or to «**0**» to turn the central heating off permanently.

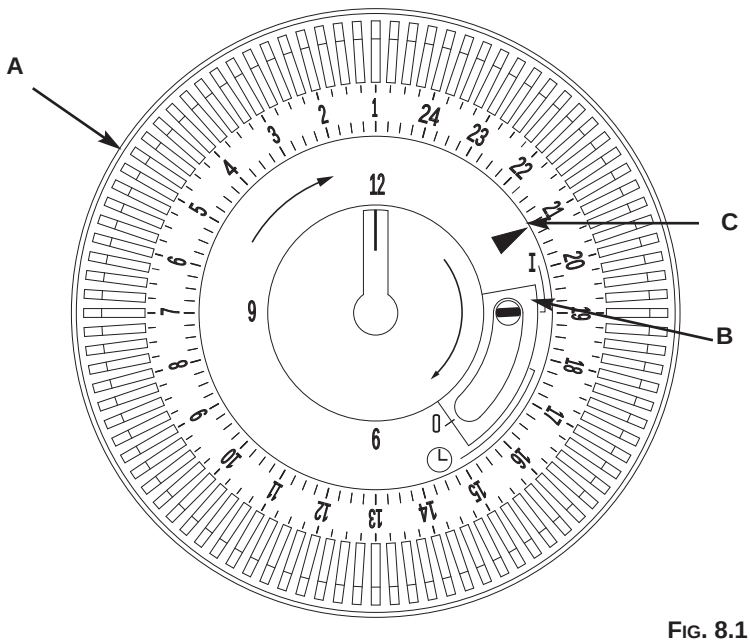

Fig. 8.1

8.2 Setting the Digital Clock

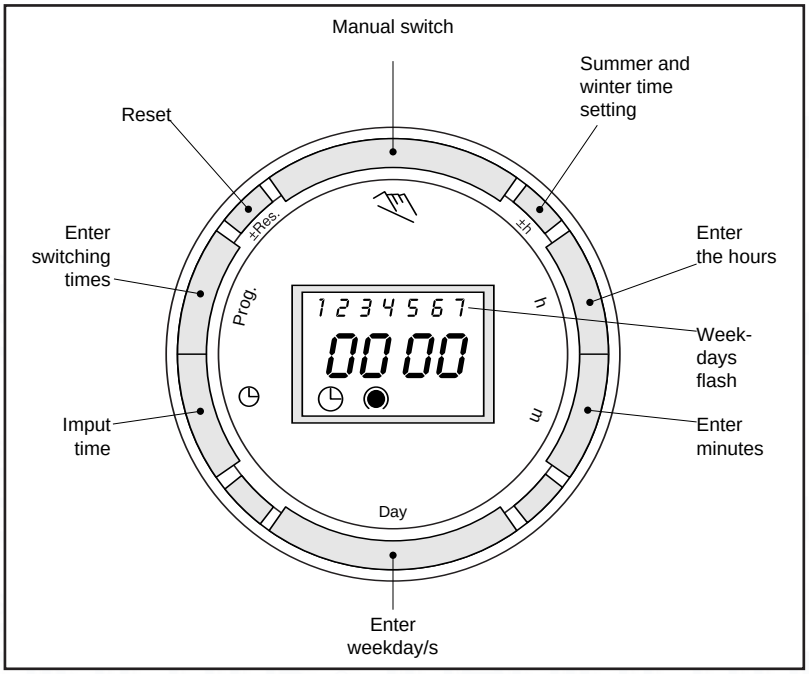

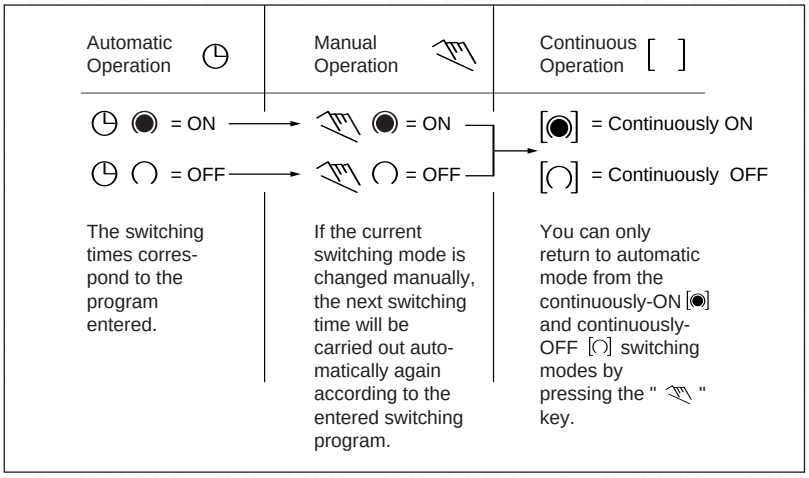

Operating the time switch

The steps marked with the symbol "►" are necessary to carry out a switching program.

Preparing for Operation

► Activate the "Res" switch (=RESET) to reset the time switch to its default setting (activate using a pencil or similar pointed instrument). Do this:
- every time you wish to "reset" the time switch
- to erase all switching times and the current time of day.

After approximately two seconds the following display appears:

► **Enter current time and weekday**

- Keep the "◷" key pressed down

During the summer time period press the +/- 1h key once.
Enter the hour using the "h" key
Enter the minutes using the "m" key
Enter the day using the "Day" key
1 = "Monday".....7 = Sunday
- Release the "◷" key.

► **Entering the switching times**

You have 20 memory locations available. Each switching time takes up one memory location.
Keep pressing the "Prog" key until a free memory location is shown in the display "– –:– –".

Programme ON or OFF with the “ ” key:

“○”= OFF; “◉”= ON

Enter the hour using “h”

Enter the minutes using “m”

If a switching command is to be carried out every day (1 2 3 4 5 6 7) then store using the “◷” key, otherwise select the day(s) it is to be carried out by using the “Day” key.

When the day selection is left blank, the programmed switching instruction operates at the same time every day

1 2 3 4 5 6 = Monday – Saturday
1 2 3 4 5 = Monday – Friday
6 7 =Saturday – Sunday

Selection of single days: 1 = Mon. ..... 2 =Tues.

Save the switching time with the “◷” key.

The time switch enters the automatic operating mode and displays the current time of day.

Begin any further entry of a switching time with the “Prog” switch. If your entry is incomplete, the segments not yet selected will blink in the display. After programming is completed, and you return the time clock to the current time display with the “◷” key, the time clock will not activate any switching instruction required for the current time. You may need to manually select the desired switching state with the “ ” key. Thereafter, as the unit encounters further switching instructions in the memory in real time, it will correctly activate all subsequent switching instructions.

Manual Override Switch “ ”

With the “ ” you can change the current setting at any time. The switching program already entered is not altered.

Reading the programmed switching times

Pressing the “Prog” key displays the programmed switching times until the first free memory location appears in the display “– – : – –”.

If you now press the “Prog” key once again, the number of free memory locations will be displayed, e.g. “**18**”. If all memory locations are occupied, the display “**00**” appears.

Changing the programmed switching times

Press the “Prog” key repeatedly until the switching time you want to change is displayed. You can now enter the new data. See point “**Entering the switching times**”.

Notes on storing switching times:

If you end your entry of the switching times by pressing the “Prog” key, then the switching time you have entered will be stored and the next memory location displayed.

In addition, a complete switching command is stored **automatically** after around 90 seconds provided **no other** key is pressed. The time switch then enters the automatic operating mode and displays the current time again.

Deleting individual switching times

Press the “Prog” key repeatedly until the switching time you wish to delete is shown in the display. Then set to “– –” using the “h” or “m” key and keep the “◷” key pressed down for around 3 seconds. The switching time is now erased and the current time is displayed.

AM / PM time display

If you press the “+/-1h” and “h” keys at the same time, the time display switches into the AM/PM mode.

9. GENERAL INFORMATION FOR THE INSTALLER

Read the instructions and recommendations in these Installation and Servicing Instructions carefully to ensure proper installation, use and maintenance of the appliance.

Keep this manual in a safe place. You may need it for your own reference while Servicing Technicians or your installer may need to consult it in the future.

This is a combined appliance for the production of central heating (C.H.) and domestic hot water (D.H.W.).

This appliance **must be used only** for the purpose for which it is designed.
The manufacturer declines all liability for damage caused by improper or negligent use.

No asbestos or other hazardous materials have been used in the fabrication of this product.

Before connecting the appliance, check that the information shown on the data plate and the Technical Information (Section 21) comply with the electric, water and gas mains of the property. You will find the data plate on the reverse of the control panel.

Do not install this appliance in a damp environment or close to equipment which spray water or other liquids.
Do not place objects on the appliance.
Do not allow children or inexperienced persons to use the appliance without supervision.

If you smell gas in the room, **do not turn on or off** light switches, use the telephone or any other object which might cause sparks.
Open doors and windows immediately to ventilate the room.
Shut the gas mains tap (at or adjacent to the gas meter) or the valve of the gas cylinder and call your Gas Supplier immediately.
If you are going away for a long period of time, remember to shut the mains gas tap or the gas cylinder valve.

Always disconnect the appliance either by unplugging it from the mains or turning off the mains switch before cleaning the appliance or carrying out maintenance.

In the case of faults or failure, switch off the appliance and turn off the gas tap. Do not tamper with the appliance.
For repairs, call your local Authorised Servicing Agent and request the use of original spare parts. For in-guarantee repairs contact MTS (GB) Limited.

Check the following at least once a year:

1 - Check the seal of water connections, replacing the gaskets if necessary.
2 - Check the seal of the gas connections, replacing the gaskets if necessary.
3 - Check the general condition of the appliance and of the combustion chamber visually.
4 - Visual check of the combustion: clean burners if necessary.
5 - With reference to point 3, dismantle and clean the combustion chamber if necessary.
6 - With reference to point 4, dismantle and clean the injectors if necessary.

7 - Visual check of the primary heat exchanger:
- check for overheating of the exchangers fins;
- clean the exhaust side of the exchanger and fan if necessary.

8 - Regulate the gas pressure, ignition pressure, partial flame, maximum flame.

9 - Check proper operation of the heating safety system:
- maximum safety temperature;
- maximum safety pressure.

10 - Check the proper operation of the gas safety system:
- gas or flame safety device;
- gas valve safety device.

11 - Check that the electrical connections have been made in compliance wit h the instructions shown in the Installation Instructions.

12 - Check the efficiency of the hot water supply (flow and temperature).

13 - Check pressure in the Domestic Expansion Vessel and top up as necessary.

14 - Check manually by turning the test knob the Temperature & Pressure Relief Valve.

15 - Check manually by turning the test knob the Expansion Relief Valve.

16 - Check discharge pipes from both the central heating and domestic hot water for obstructions.

17 - Check general operation of the appliance.

18 - Check the exhaust system for the combustion products.

19 - Check all unvented domestic hot water controls and systems

NOTE: These checks are not exhaustive

9.1 Overall View

1. - Steel chassis
2. - Expansion vessel (primary)
3. - Fan
4. - Main heat exchanger made of copper
5. - Sealed chamber
6. - Stainless steel multi-gas burner assembly comprising :
- removable burner manifold
- two ignition electrodes
- one flame detection electrode

7. - Gas section comprising :
- two safety valves
- one modulating valve

8. - Automatic air vent
9. - Stainless steel domestic hot water tank
10. - Pump
11. - Electrical box
12. - Igniter
13. - Overheating safety device
14. - Air pressure switch
15. - Tank thermistor
16. - Heating flow thermistor
17. - Heating return thermistor
18. -Three way valve
19. - Indirect coil
20. - DHW activator
21. - Hot water control thermistor
22. - DHW expansion vessel
23. - Programmer
24. - Safety valve T&P
K. - Flue kit fixing point (refer to Section 11)

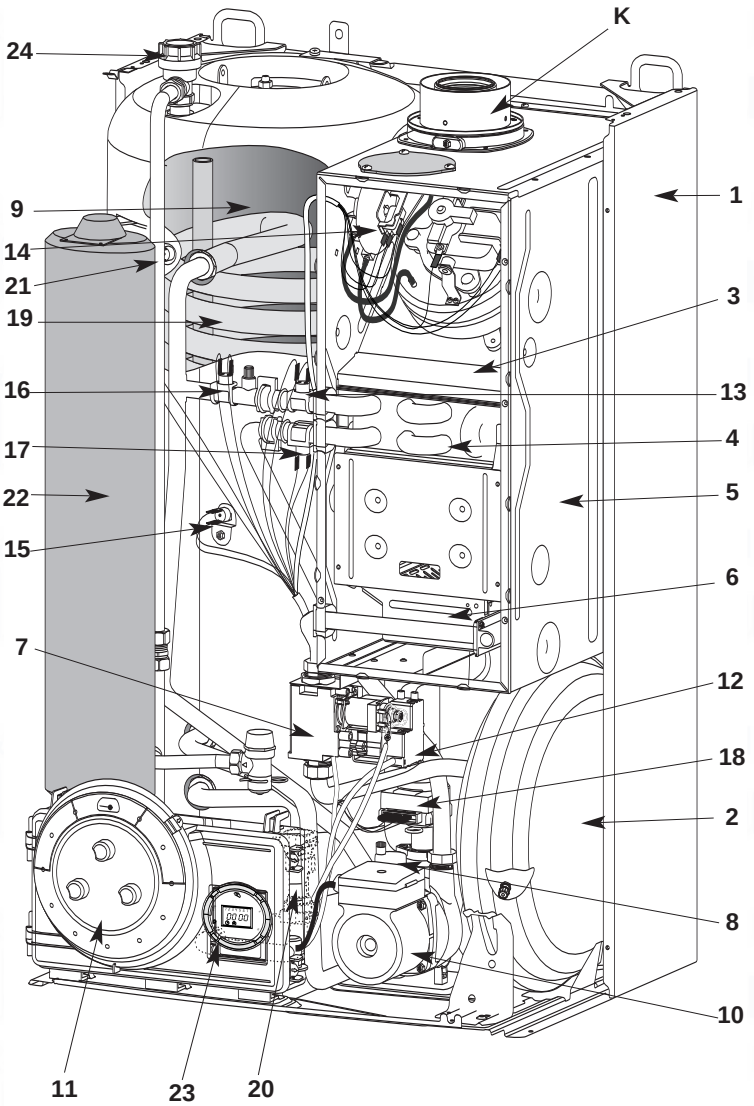

10. INSTALLATION

The technical information and instructions provided herein below are intended for the installer / Servicing Technician so that the unit may be installed and serviced correctly and safely.

10.1 Delivery

There will be two items:
1 - The fully assembled boiler
2 - A separately boxed connection kit

10.2 Reference Standards

WATER REGULATIONS

In GB it is necessary to comply with the Water Supply (Water Fittings) Regulations 1999, for Scotland, The Water Bylaws 2000, Scotland. The Genus 30 Plus is an approved product under the Water Regulations.

To comply with the Water Regulations, your attention is drawn to The Water Regulations guide published by the Water Regulations Advisory Scheme (WRAS) gives full details of the requirements.

In IE, the requirements given in the current edition of I.S.813 and the current Building Regulations must be followed.

BUILDING REGULATIONS

These are a statutory document and take priority over all other regulations and recommendations. The installation of an unvented hot water storage cylinder is classified as a "Controlled Service" and Regulation G3 applies. To meet the requirements of the Regulation, installation of an unvented system should be undertaken by a "competent installer".

All installations of unvented hot water storage systems having a capacity of more than 15 litres should be notified to the relevant Local Authority by means of Building Notice or by the submission of full plans. It is important to note that it is a criminal offence to install an unvented hot water storage system without notifying the Local Authority.

The installation of this appliance must be in accordance with the relevant requirements of the Local Building Regulations, the current I.E.E. Wiring Regulations, the bylaws of the local water authority, in Scotland, in accordance with the Building Standards (Scotland) Regulation and Health and Safety document No. 635 “Electricity at work regulations 1989” and in the Republic of Ireland with the current edition of I.S. 813, the Local Building Regulations (IE).

C.O.S.H.H.

Materials used in the manufacture of this appliance are non-hazardous and no special precautions are required when servicing.

Installation should also comply with the following British Standard Codes of Practice:

BS 7593	**Treatment of water in domestic hot water central heating systems**
BS 5546	**Installation of hot water supplies for domestic purposes**
BS 5440-1	**Flues**
BS 5440-2	**Air supply**
BS 5449	**Forced circulation hot water systems**
BS 6798	**Installation of gas fired hot water boilers of rated input not exceeding 60kW**
BS 6891	**Installation of low pressure gas pipe up to 28mm**
BS 7671	**IEE wiring regulations**
BS 7074	**Specification for expansion vessels**
BS 5482	**Installation of L.P.G.**

and in the Republic of Ireland in accordance with the following Codes of Practice:

I.S. 813	**Domestic Gas Installations**

The following BS Standards give valuable information;

BS 5546	**Installation of hot water supplies for domestic purposes**
BS 5449	**Forced circulation hot water systems**
BS 7074	**Specification for expansion vessels**
BS 7593	**Treatment of water in domestic hot water central heating systems**

WARNING!!
The addition of anything that may interfere with the normal operation of the appliance without express written permission of the manufacturer or his agent could invalidate the warranty. In GB this could also infringe the **GAS SAFETY (Installation and Use) REGULATIONS**.

In the Republic of Ireland the installation and initial start up of the appliance must be carried out by a Competent Person in accordance with the current edition of I.S.813 “Domestic Gas Installations” and the current Building Regulations, reference should also be made to the current ETCI rules for electrical installation.

10.3 Siting the Appliance

The appliance may be installed in any room or indoor area, although particular attention is drawn to the requirements of the current I.E.E. Wiring Regulations, in Scotland, the electrical provisions of the Building Regulations applicable in Scotland, and in the Republic of Ireland, the current edition of I.S.813, with respect to the installation of the combined appliance in a room containing a bath or shower. The location of the boiler in a room containing a bath or shower should only be considered if there is no alternative.

Where a room-sealed appliance is installed in a room containing a bath or shower reference should be made to the relevant requirements.

In GB this is the current I..E.E. WIRING REGULATIONS and BUILDING REGULATIONS. In IE reference should be made to the current edition of I.S.813 and the current ETCI rules.

If the boiler is to be sited into a timber framed building, reference must be made to the current edition of the Institution of Gas Engineers Publication IGE/UP/7 (Gas Installations in Timber Framed Housing).

The location must permit adequate space for servicing and air circulation around the appliance as indicated in Section 10.4.
The location must permit the provision of an adequate flue and termination.
For unusual locations special procedures may be necessary.
BS 6798-1987 gives detailed guidance on this aspect.
A compartment used to enclose the appliance must be designed specifically for this purpose. No specific ventilation requirements are needed for the installation within a cupboard.

This appliance is not suitable for outdoor installation.

The type C appliances (in which the combustion circuit, air vent intake and combustion chamber are air-tight with respect to the room in which the appliance is installed) can be installed in any type of room.

Secondary ventilation is not required with this boiler. The boiler must be installed on a solid, non-combustible, permanent wall to prevent access from the rear.

10.4 Clearances

In order to allow for access to the interior of the boiler for maintenance purposes, the boiler must be fitted with a clearance of 450mm in front 400mm below the boiler and 200mm above the boiler, and installed in compliance with the clearance requirements indicated in **Fig. 10.1**.

10.5 Overall Dimensions

Legend:

39 = Gas service tap
40 = Heating return
41 = Heating flow
42 = Water service tap
43 = Tank hot water flow
38 = Water tank discharge valve
44 = Central heating discharge valve

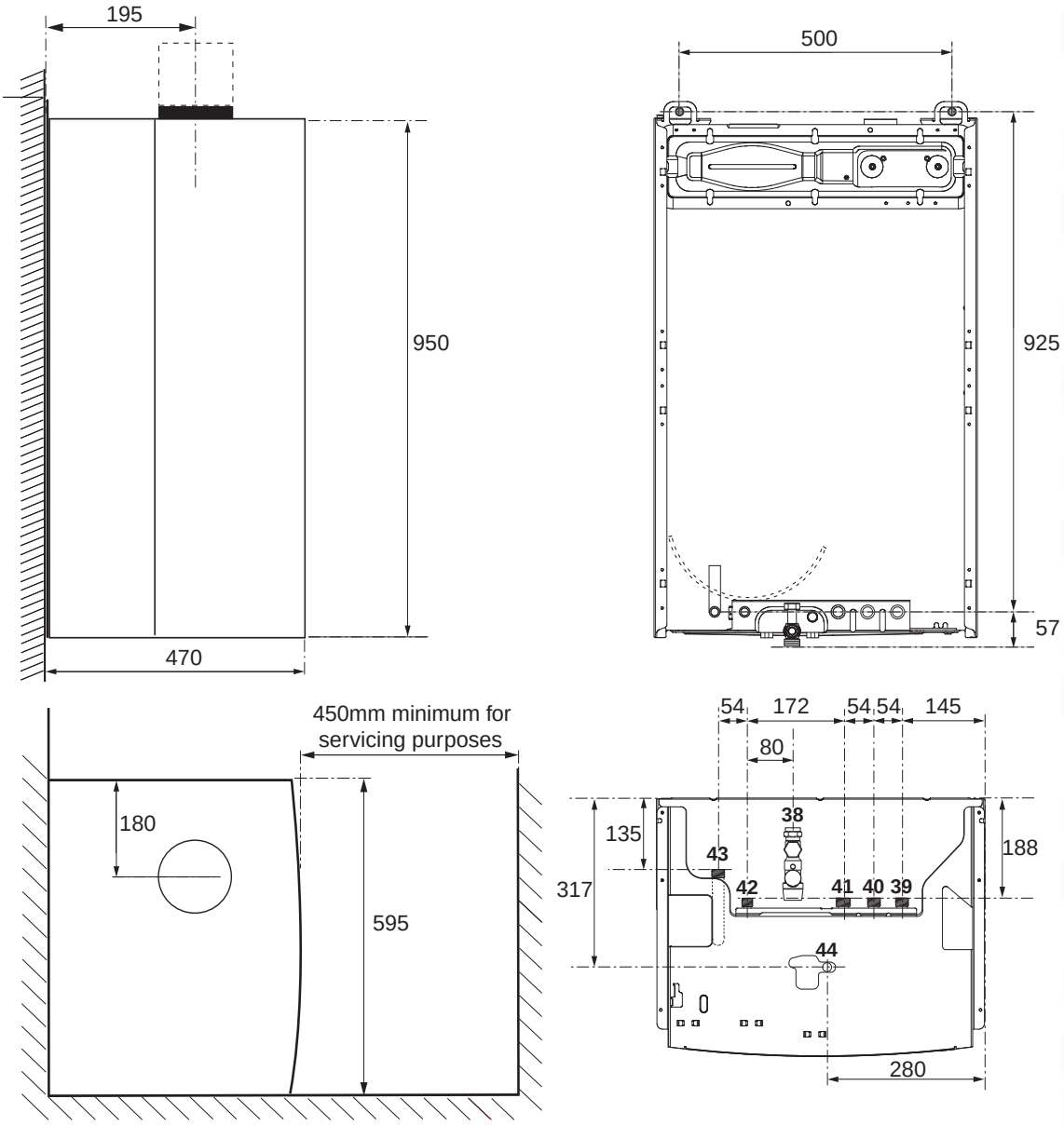

Fig. 10.1

10.6 Mounting the Appliance

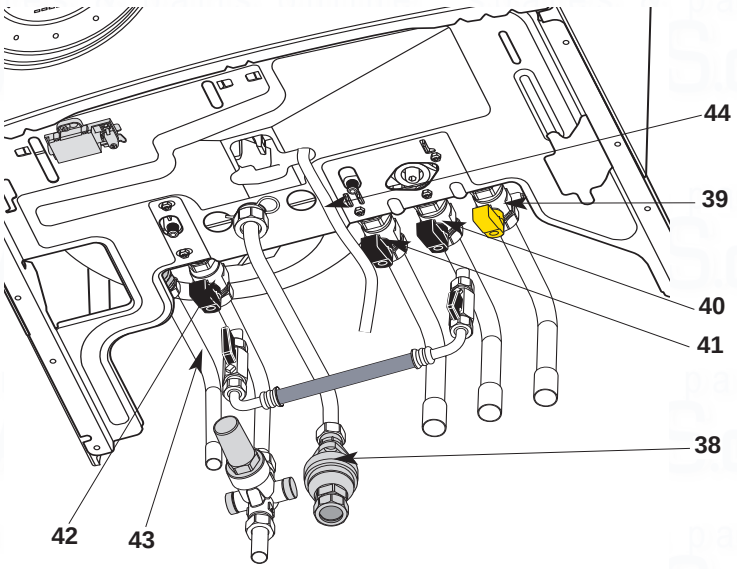

FIG. 10.2

Legend:

39 = Gas service tap
40 = Heating return
41 = Heating flow
42 = Water service tap
43 = Tank hot water flow
38 = Water tank valve
44 = Heating valve

After removing the boiler from its packaging, remove the template from the separate box containing the connection kit. NOTE: Pay particular attention to any test water that may spill from the appliance.

Place the template in the position the appliance is to be mounted and after ensuring it is hanging squarely, use it to drill the holes for the hanging bracket, connection kit and flue pipe(s) **NB:** For further information relating to the flue installation please refer to SECTION 11 FLUE CONNECTION. (If the appliance is to be fitted on a wall of combustible material, the wall **must** be protected by a sheet of fireproof material).
If the appliance is to be fitted into a timber framed building, guidance should be sought from the Institute of Gas Engineers document REF: IGE/UP/7.

10.6.1. Drill the wall and plug using those supplied with the connections kit, position the hanging bracket and secure with the wall bolts supplied, assemble the connection kit and secure to the wall. **NOTE:** It is highly recommended that a spirit level be used to position the appliance to ensure that it is perfectly level.
10.6.2. Position the appliance on the hanging bracket and connect the connection kit to the boiler connections. (see also Sections 10.8 Gas Connections, 10.9 Water Connections & FIG.10.2).

10.7 Electrical Connection

For safety purposes, have a competent person carefully check the electrical system in the property, as the manufacturer will not be held liable for damage caused by the failure to earth the appliance properly or by anomalies in the supply of power. Make sure that the residential electrical system is adequate for the maximum power absorbed by the unit, which is indicated on the rating plate. In addition, check that the section of cabling is appropriate for the power absorbed by the boiler.

The boiler operates with alternating current, as indicated in the Technical Information table (Section 21), where the maximum absorbed power is also indicated. Make sure that the connections for the neutral and live wires correspond to the indications in the diagram. The appliance electrical connections are situated on the reverse of the control panel (see the Servicing Instructions Section 18 for further information).

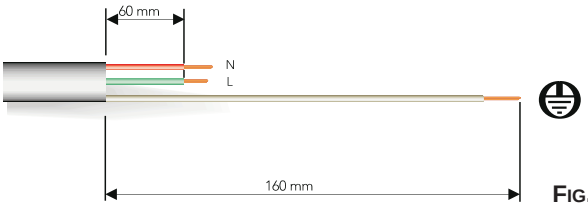

FIG. 10.3

Important!
In the event that the power supply cord must be changed, replace it with one with the same specifications. Make the connections to the terminal board located within the control panel, as follows:
- The yellow-green wire should be connected to the terminal marked with the earth symbol; make sure to re-use the ferrule mounted on the other supply cord;
- The blue wire should be connected to the terminal marked "N";
- The brown wire should be connected to the terminal marked "L".
Note: The diagrams for the electrical system are indicated in Section 13.

Warning, this appliance must be earthed.

External wiring must be correctly earthed, polarised and in accordance with relevant regulations / rules. In GB this is the current I.E.E. WIRING REGULATIONS. In IE reference should be made to the current edition of the ETCI rules. This boiler is supplied for connection to a 220 - 240 V~ 50 Hz supply.

The supply must be fused at 3 A.

The method of connection to the electricity supply must facilitate complete electrical isolation of the appliance, by the use of a fused double pole isolator having a contact separation of at least 3 mm in all poles or alternatively, by **means of a 3 A** fused three pin plug and unswitched shuttered socket outlet both complying with BS 1363.

The point of connection to the Electricity supply must be readily accessible and adjacent to the appliance unless the appliance is installed in a bathroom when this must be sited outside the bathroom.

10.8 Gas Connection

The local gas region contractor connects the gas meter to the service pipe.

The gas installation should be in accordance with the relevant standards. In GB this is BS6891 and in IE this is the current edition of I.S.813.

The connection the the appliance is a 22mm copper tail located at the rear of the gas service cock (Fig. 10.2).

If the gas supply for the boiler serves other appliances ensure that an adequate supply is available both to the boiler and the other appliances when they are in use at the same time.

Pipe work must be of an adequate size. Pipes of a smaller size than the boiler inlet connection should not be used.

10.9 Water Connections

Central Heating

Detailed recommendations are given in BS 6798:1987 and BS 5449-1:1990, the following notes are given for general guidance.

Pipe Work:

Copper tubing to BS EN 1057:1996 is recommended for water pipes. Jointing should be either with capillary soldered or compression fittings.

Where possible pipes should have a gradient to ensure air is carried naturally to air release points and water flows naturally to drain taps.

The appliance has a built-in automatic air release valve, however it should be ensured as far as possible that the appliance heat exchanger is not a natural collecting point for air.

Except where providing useful heat, pipes should be insulated to prevent heat loss and avoid freezing.

Particular attention should be paid to pipes passing through ventilated spaces in roofs and under floors.

By-pass:

The appliance includes an automatic by-pass valve, which protects the main heat exchanger in case of reduced or interrupted water circulation through the heating system, due to the closing of thermostatic valves or cock-type valves within the system.

System Design:

This boiler is suitable only for sealed systems.

Drain Cocks:

These must be located in accessible positions to permit the draining of the whole system. The taps must be at least 15mm nominal size an manufactured in accordance with BS 2870:1980.

Safety Valve Discharge (Primary Water):

The discharge should terminate facing downwards on the exterior of the building in a position where discharging (possibly boiling water & steam) will not create danger or nuisance, but in an easily visible position, and not cause damage to electrical components and wiring.

The discharge must not be over an entrance or a window or any other type of public access.

Mains Water Feed - Central Heating:

There must be no direct connection to the mains water supply even through a non-return valve, without the approval of the Local Water Authority, and must be in accordance with water supply regulations. Your attention is drawn to, for GB: Guidance G24.2 and recommendation R24.2 of the water regulations guide and for IE: the current edition of I.S.813.

Filling:

A temporary method for initially filling the system and replacing lost water during servicing and initial filling (complying to current water regulations and byelaws) is provided. The flexible hose must be removed once the system has been filled.

Domestic Hot Water

Storage Discharge Pipe Work

1) The tundish must be installed directly below the discharge outlet connection of the boiler. The tundish must also be in a position visible to the occupants, and positioned away from any electrical devices. The discharge pipe from the tundish should terminate outside in a safe place where there is no risk to persons in the vicinity of the discharge and to be of metal.
2) Discharge pipes from the temperature & pressure relief and expansion relief valve are joined together within the appliance.
3) The pipe diameter must be at least one pipe size larger than the nominal outlet size of the safety device unless it's total equivalent hydraulic resistance exceeds that of a straight pipe 9m long.

   i.e. Discharge pipes between 9m and 18m equivalent resistance length should be at least 2 sizes larger than the nominal outlet size of the safety device. Between 18m and 27m at least 3 sizes larger, and so on.

   Bends must be taken into account in calculating the flow resistance.

   See fig. 10.4 (page 18) and Table 1 (page 19).
4) The discharge pipe must have a vertical section of pipe at least 300m in length, below the tundish before any elbows or bends in the pipework.
5) The discharge pipe must be installed with a continuous fall.
6) The discharge must be visible at both the tundish and the final point of discharge, but where this is not possible or practically difficult; there should be clear visibility at one or other of these locations. Examples of acceptance are:

   i) Ideally below a fixed grating and above the water seal in a trapped gully.

   ii) Downward discharges at a low level; i.e. up to 100mm above external surfaces such as car parks, hard standings, grassed areas etc. These are acceptable providing that where children may play or otherwise come into contact with discharges, a wire cage or similar guard is positioned to prevent contact, whilst maintaining visibility.

iii) Discharges at high level; I.e. into a metal hopper and metal down pipe with the end of the discharge pipe clearly visible (tundish visible or not).

Or onto a roof capable of withstanding high temperature discharges of water 3m from any plastic guttering systems that would take such a discharge (tundish visible).

iv) Where a single pipe serves a number of discharges, such as in blocks of flats, the number served should be limited to not more than 6 systems so that any installation can be traced reasonably easily.

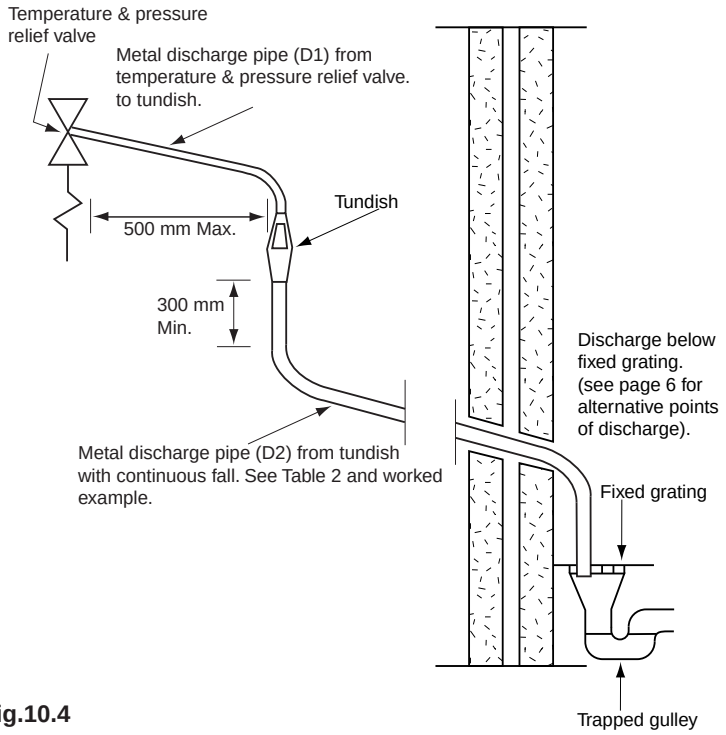

Fig.10.4

The single common discharge pipe should be at least one pipe size large than the largest individual discharge pipe to be connected.

If unvented hot water storage systems are installed where discharges from safety devices may not be apparent I.e. in dwellings occupied by the blind, infirm or disabled people, consideration should be given to the installation of an electronically operated device to warn when discharge takes place.

Note: The discharge will consist of scalding water and steam. Asphalt, roofing felt and non-metallic rainwater goods may be damaged by such discharges.

Warning

The outlet from the temperature & pressure relief valve must not be used for any other purpose.

The temperature & pressure relief valve must not be removed in any circumstances. Any of the above will totally invalidate the warranty.

Note

The discharge from the central heating and domestic hot water systems may be joined together after the tundish.

Air Release Points:

These must be fitted at all high points where air naturally collects and must be sited to facilitate complete filling of the system.

The appliance has an integral sealed expansion vessel to accommodate the increase of water value when the system is heated.

It can accept up to 7l (1.5 gal) of expansion water. If the heating circuit has an unusually high water content, calculate the total expansion and add an additional sealed expansion vessel with adequate capacity.

Domestic Water:

The domestic water must be in accordance with the relevant recommendation of BS 5546:1990. Copper tubing to BS EN 1057:1996 is recommended for water carrying pipe work and must be used for pipe work carrying drinking water. The domestic hot water temperature should be be adjusted to trip at 60˚C. This temperature will prevent the formation of limescale in hard water areas.

Note: This appliance is capable of producing domestic hot water of up to 70˚C. For extra security against scalding a thermostatic blending valve may be installed on the domestic hot water outlet.

Secondary Return:

The secondary return connection can be used as an option. A Non Return Valve (not supplied) must be fitted to prevent back flow and a Bronze Pump will be needed in conjunction with a Pipe Thermostat to circulate the hot water (neither of which are supplied).

Table 1. Sizing of copper discharge pipe "D2" for common temperature valve outlet sizes.

Valve outlet size	Minimum size of discharge pipe D1*	Minimum size of discharge pipe D2* from tundish	Maximum resistance allowed, expressed as a length of pipe (i.e. no elbow or bends)	Resistance created by each elbow or bend
G 1/2	15 mm	22 mm	Up to 9 m	0.8 m
		28 mm	Up to 18 m	1.0 m
		35 mm	Up to 27 m	1.4 m
G 3/4	22 mm	28 mm	Up to 9 m	1.0 m
		35 mm	Up to 18 m	1.4 m
		42 mm	Up to 27 m	1.7 m
G 1	28 mm	35 mm	Up to 9 m	1.4 m
		42 mm	Up to 18 m	1.7 m
		54 mm	Up to 27 m	2.3 m

Worked Example:

The example below is for a G 1/2 Temperature & Pressure Relief valve with a discharge pipe (D2) having 4 no. elbows and length of 7m from the Tundish to the point of discharge.From Table 1

Maximum resistance allowed for a straight length of 22mm copper discharge pipe (D2) from G 1/2 T & P valve is 9m.

Subtract the resistance for 4 no. 22mm elbows at 0.8m each = 3.2m.

Therefore the maximum permitted length equates to: 5.8m.

As 5.8m is less than the actual length of 7m therefore calculate the next largest size.

Maximum resistance allowed for a straight length of 28mm pipe (D2) from G 1/2 T & P valve equates to: 18m.

Subtract the resistance for 4 no. 28mm elbow at 1.0m each = 4m.

Therefore the maximum permitted length equates to: 14m

As the actual length is 7m, a 28mm (D2) copper pipe will be satisfactory.

Residual Head of the Boiler $\Delta T = 20^{\circ}C$

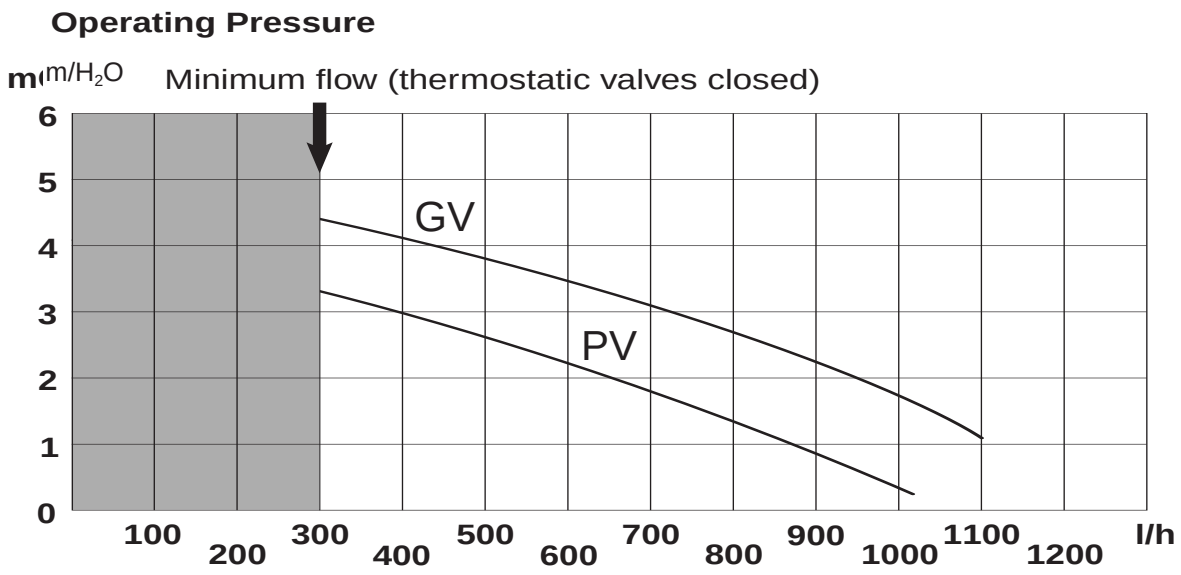

Fig. 10.5

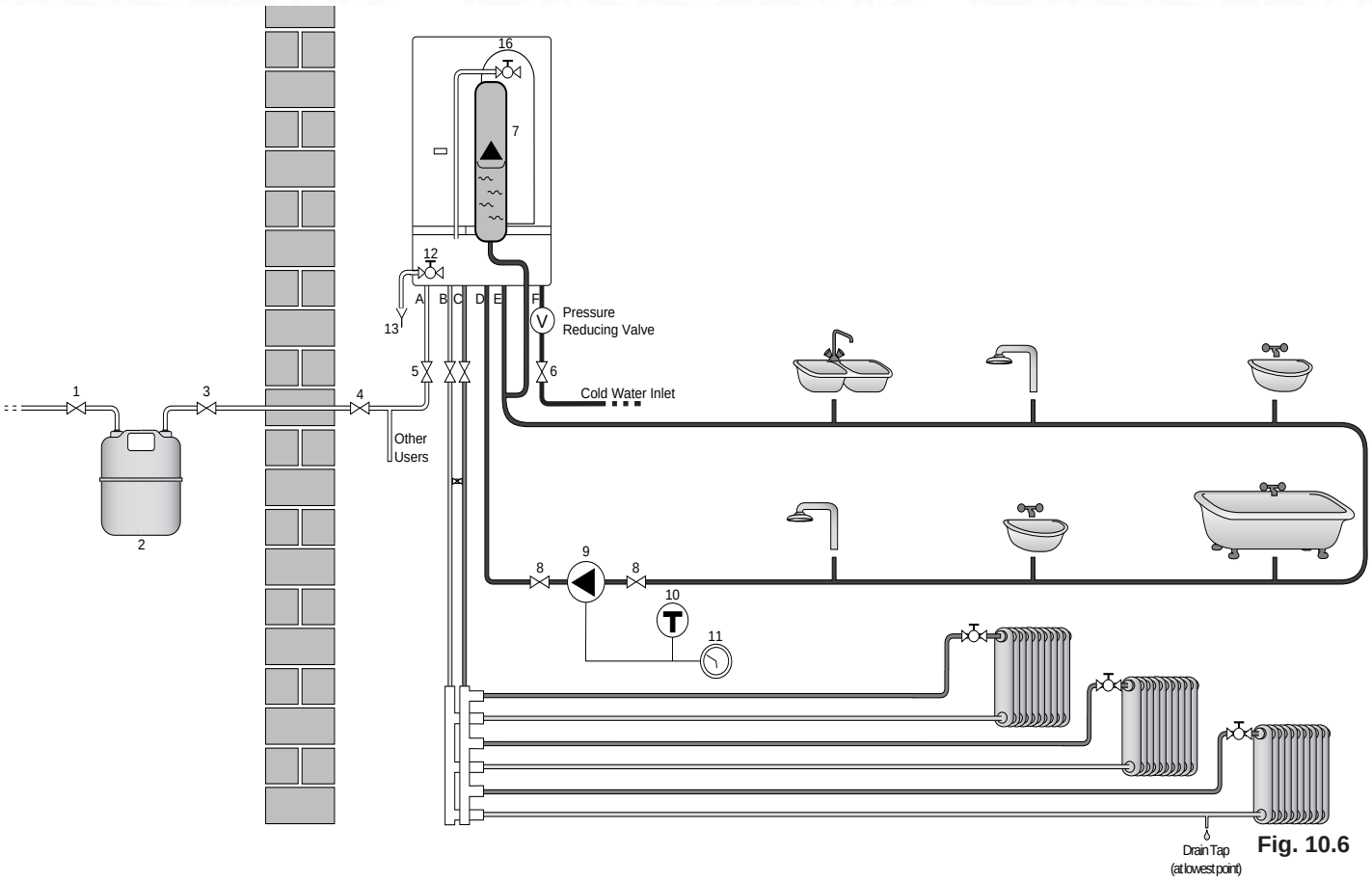

Fig. 10.6

A - Gas Inlet
B - C.H. Return
C - C.H. Flow
D - D.H.W. Secondary Return
E - D.H.W. Flow
F - C.W. Inlet
1 - Gas Meter Inlet Cock
2 - Gas Meter
3 - Gas Meter Outlet Cock
4 - Internal Gas Cock
5 - Appliance Gas Inlet Cock
6 - Cold Water Inlet Cock
7 - D.H.W. Expansion Vessel
8 - Cock
9 - Secondary Return Pump
10 - Thermostat
11 - Time Control Clock
12 - T&P Valve
13 - Tundish

NOTE: BOILER CONNECTIONS SHOWN FROM THE REAR OF THE APPLIANCE

11. Connecting the Flue

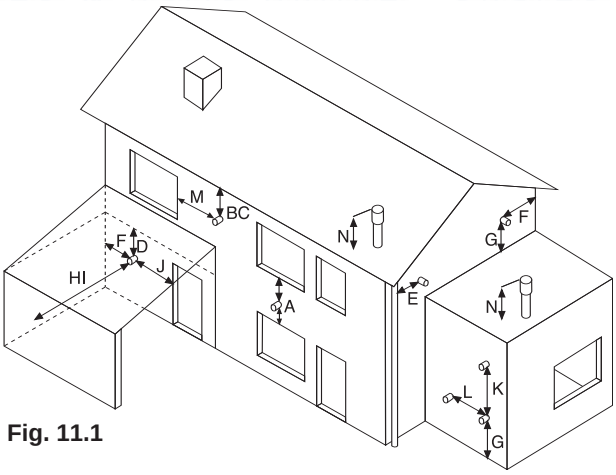

Fig. 11.1

TERMINAL POSITION		mm
A -	Directly above or below an openable window or other opening	300
B -	Below gutters, solid pipes or drain pipes	75
C -	Below eaves	200
D -	Below balconies or car-port roof	200
E -	From vertical drain pipes and soil pipes	150
F -	From internal or external corners	300
G -	Above ground or balcony level	300
H -	From a surface facing a terminal	600
I -	From a terminal facing a terminal	1200
J -	From an opening in the car port (e.g. door, window) into dwelling	1200
K -	Vertically from a terminal in the same wall	1500
L -	Horizontally from a terminal in the same wall	300
M -	Horizontally from an opening window	300
N -	Fixed by vertical flue terminal	

NOTE: THE FLUE MUST TERMINAL MUST BE AT LEAST 2 METRES FROM ANY OPENING IN A BUILDING OPPOSITE AND SHOULD NOT DISCHARGE ACROSS BOUNDARIES. IN ADDTION TO THIS, THE FLUE MUST NOT TERMINATE IN A PLACE LIKELY TO CAUSE NUISANCE.

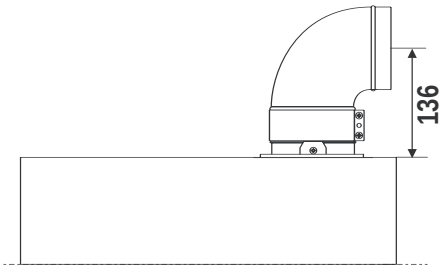

In addition, it is also possible to use a split system by fitting a special adapter to the flue discharge collar and using one of the apertures for the air vent intake located on the top part of the combustion chamber (Fig. 11.3) See Section 11.6.

11.1 Flue Connections

Flue System

The provision for satisfactory flue termination must be made as described in BS 5440-1, for IE recommendations I.S.813.

The appliance must be installed so that the flue terminal is exposed to outdoor air, consideration must be given to terminal discharges onto a pathway or passageway, check that the combustion discharges will not cause a nuisance and that the terminal will not obstruct the passageway.

The terminal must not discharge into another room or space such as an outhouse or lean-to.

It is important that the position of the terminal allows a free passage of air across it at all times.

If the terminal is fitted within 1 metre of a plastic gutter, within 500mm of a painted eave or a painted gutter, an aluminium shield of at least 1 metre long should be fitted to the underside of the gutter or painted surface. An air space of 5mm should be left between shield and gutter.

The terminal should be located with due regard for the damage or discolouration that might occur on buildings in the vicinity.

In cold or humid weather water vapour may condense on leaving the flue terminal. The effect of such “steaming” must be considered.

If the terminal is less than 2 metres above a balcony, above ground or above a flat roof to which people have access, then a suitable terminal guard must be fitted. When ordering a terminal guard, quote the appliance model number.

A suitable terminal guard is available from:

TOWER FLUE COMPONENTS
Morley Road
Tonbridge
Kent TN9 1RA

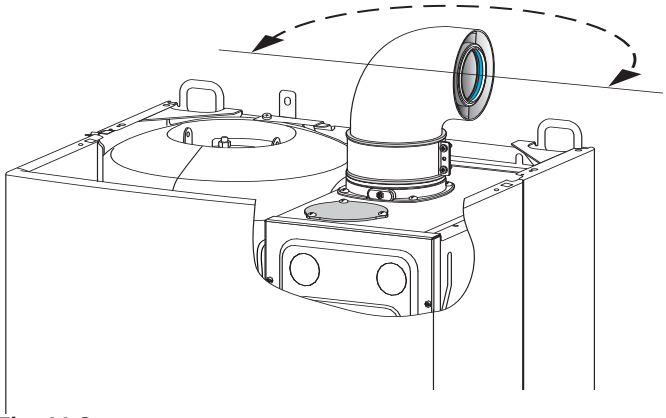

Fig. 11.2

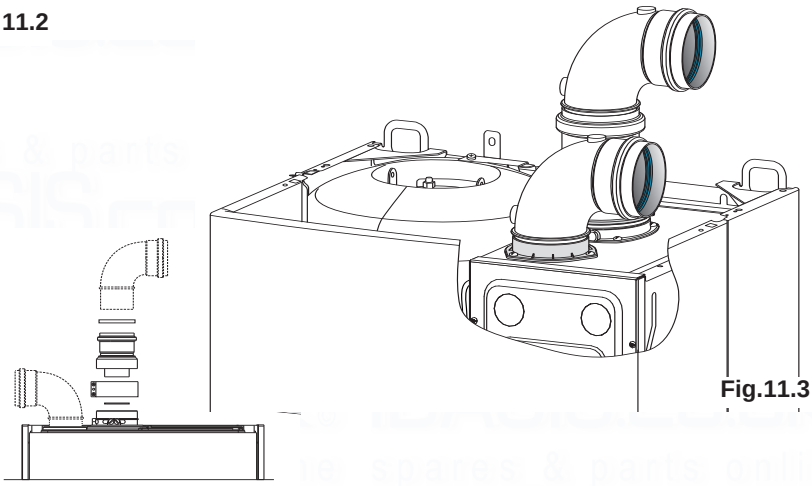

Fig.11.3

WARNING!!
The exhaust gas ducts must not be in contact with or close to inflammable material and should not pass through building structures or walls made of inflammable material.
When replacing an old appliance, the flue must be changed.

IMPORTANT!!
Ensure that the flue is not blocked.
Ensure that the flue is assembled correctly, is secure and is free of leaks.

The minimum acceptable spacing from the terminal to obstructions and ventilation openings are specified in Fig. 11.1

The boiler is designed to be connected to a coaxial flue discharge system.
The boiler must only be installed with a flue supplied by the boiler manufacturer.

These kits are supplied separately to the appliance in order to respond to different installation solutions. For more information with regard to the inlet/outlet accessories consult the flue guide and the following instructions. The boiler is predisposed for the connection to a concentric air intake and exhaust duct system.

Ø 60/100 mm

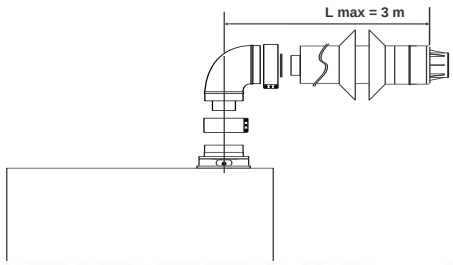

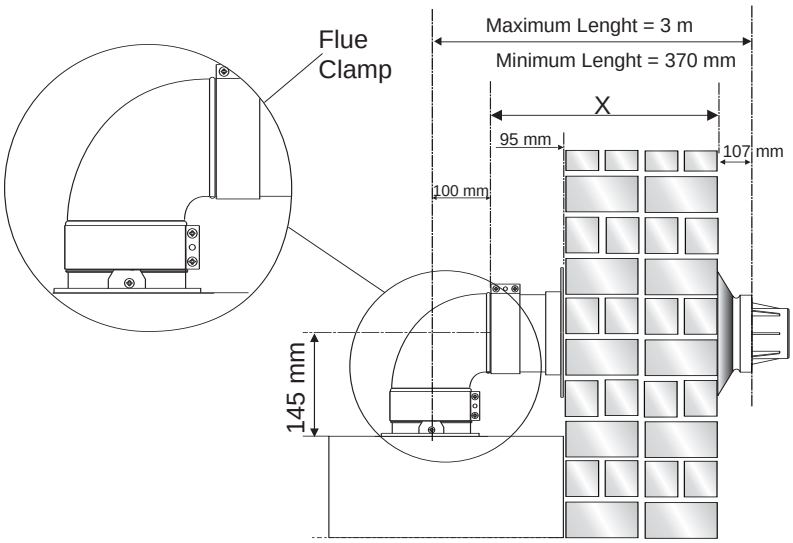

FIG. 11.4

11.2 Fitting the coaxial flue (Ø 60/100 Horizontal)

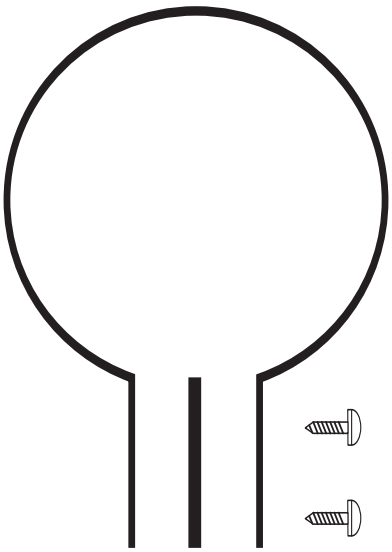

FIG. 11.5

WARNING!!
Consult the table on Page 28, to see if a restrictor is required for the type of flue system being used. Should it be necessary to fit the restrictor, it must be placed in the air inlet connection on the boilers exhaust terminal.

CONTENTS:
1x SILICONE O-RING (60mm)
1x ELBOW (90°)
2x WALL SEALS (INTERNAL & EXTERNAL)
1x ALUMINIUM FLUE PIPE INCLUDING TERMINAL (1 METRE - 60/100)
2x FLUE CLAMPS
4x SCREWS
2x RECTANGULAR FOAM PADS

Once the boiler has been positioned on the wall, insert the elbow into the socket and rotate to the required position. NOTE: It is possible to rotate the elbow 360° on its vertical axis.

Using the flue clamps, pads and screws supplied (Figs 11.4 & 11.5) secure the elbow to the boiler.

The 1 metre horizontal flue kit (705958) supplied is suitable for an exact **X dimension** of 823mm, and the 750mm horizontal flue kit (705785) is suitable for an exact **X dimension** of 573mm.

Measure the distance from the face of the external wall to the face of the flue elbow **(X - Fig 11.4),** add 22 mm to this measurement, you now have the total length of flue required (including the terminal), this figure must now be subtracted from 860mm, you now have the total amount to be cut from the plain end of the flue.

Cut the flue to the required length ensuring that the distance between the inner and the outer flue is maintained (Fig 11.6).

e.g.

X = 508mm + 22mm = 530mm

860 - 530 = 330mm (Length to be cut from the plain end of the flue).

Once cut to the required length, ensure that the flue is free from burrs and reassemble the flue. If fitting the flue from inside of the building attach the grey outer wall seal to the flue terminal and push through the flue through the hole, once the wall seal has passed through the hole, pull the flue back until the seal is flush with the wall. Alternatively, the flue can be installed from outside of the building, the grey outer seal being fitted last.

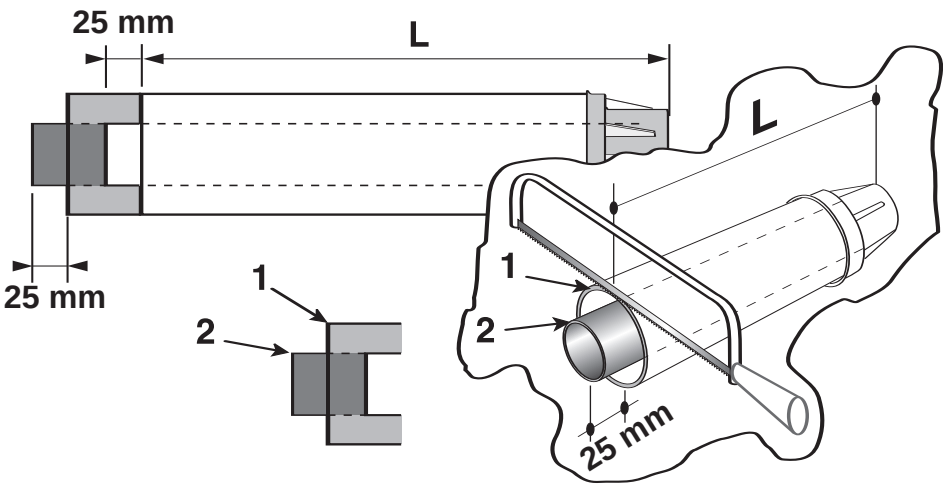

Fig 11.6

11.3 Fitting the telescopic flue (Ø 60/100 Horizontal)

CONTENTS:

1x SILICONE O-RING (60mm)

1x ELBOW (90°)

2x WALL SEALS (INTERNAL & EXTERNAL)

1x ALUMINIUM FLUE PIPE INCLUDING TERMINAL (TELESCOPIC - 60/100)

2x FLUE CLAMPS

8x SCREWS

2x SEALS

The telscopic flue is suitable for use with an exact minimum **X dimension** of 270mm and an exact maximum **X dimension** 470mm.

IMPORTANT!!

Do not extend the telescopic flue to an X dimension of more than 470mm. If longer lengths are required use extension pieces as necessary. Under no circumstances must the telescopic flue be cut.

The wall must then be made good around the flue (ensuring a fall of 1° is maintained away from the boiler to the flue terminal). Once made good, place the inner (white) wall seal over the flue and push up to the wall, secure the flue to the elbow by using the clamp supplied.

For each additional 90° elbow 1 metre must be removed from the total flue length (maximum 3 metres including the 1st elbow). For each additional 45° elbow 0.5 metre must be subtracted from the total flue length (Fig 11.8).

11.4 Fitting the coaxial flue (Ø 60/100 Vertical)

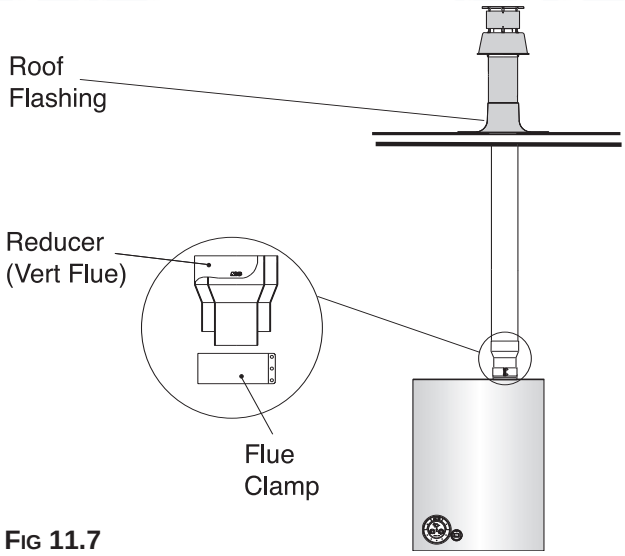

FIG 11.7

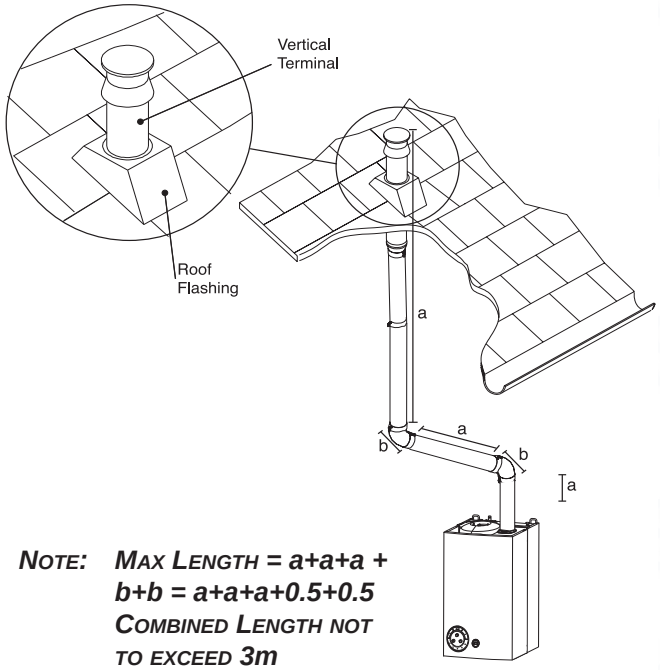

NOTE: ***MAX LENGTH = a+a+a + b+b = a+a+a+0.5+0.5 COMBINED LENGTH NOT TO EXCEED 3m***

FIG 11.8

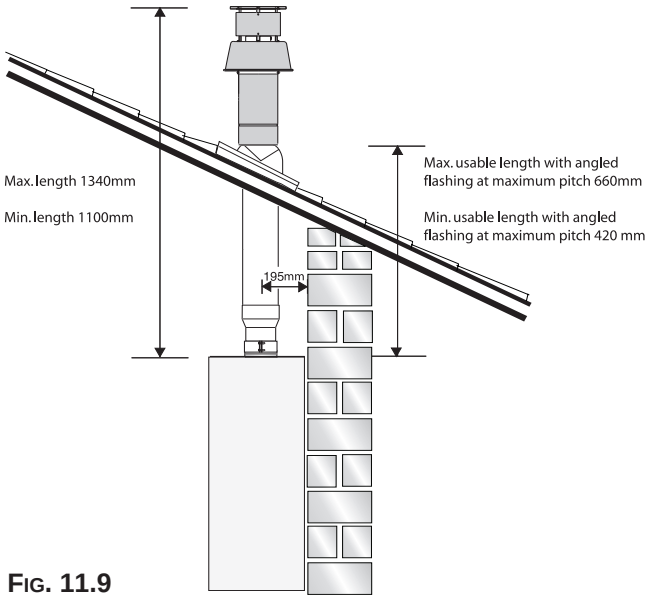

FIG. 11.9

CONTENTS:
1x SILICONE O-RING (60mm)
1x CONICAL ADAPTOR (60/100mm : 80/125mm)
1x VERTICAL FLUE KIT (80/125mm)
3x SCREWS

The vertical flue kit is supplied with a specially designed weather proof terminal fitted, it can be used either with a flat roof or a pitched roof. (see Figs. 11.7 and 11.9).
The Vertical flue kits maximum and minimum useable lengths with both flat and pitched roof flashings are indicated in Figs. 11.9 and 11.10 also**.**

Before proceeding to fit the flue, ensure that the maximum flue length has not been exceeded and that all elbows and bends have been taken into consideration, the maximum flue length is 3 metres, for each additional 90° elbow 1 metre must be subtracted from the total flue length, and for each 45° 0.5 metres must be subtracted from the total flue length **(the offset and height of 2 x 45° bends can be seen in Fig. 11.12).**

Mark the position of the flue hole in the ceiling and/or roof (see Fig. 11.9 for distance from wall to the centre of the flue).

Cut a 130mm diameter hole through the ceiling and/or roof and fit the flashing plate to the roof.
Should it be necessary to cut the flue ***DO NOT*** cut the outer white ar inlet tube, cut the aluminium exhaust flue 6mm longer than the outer white air tube when used at minimum length. ***DO NOT*** cut more that 250mm from the inner aluminium exhaust flue.

To connect the vertical flue kit directly to the boiler, place the adaptor (see Fig. 11.7) (supplied with vertical flue kit) onto the exhaust manifold and secure with the clamp, the vertical flue kit must then be inserted through the roof flashing from the outside, this will ensure that the correct clearance above the roof is provided as the terminal is a fixed height.

Should extensions be required, they are available in 1 metre **(Part No. 705786)**, 500mm **(Part No. 705790)** and 160mm lengths **(Part No. 705812)**, they must be connected directly to the boiler and secured with the clamp supplied before connecting the adaptor to allow the vertical flue kit to be fitted. In the event that extension pieces need to be shortened, they ***must*** only be cut at the male end and it must be ensured that the distance between the inner and outer flue are kept (Fig. 11.6).

When utilising the vertical flue system, action must be taken to ensure that the flue is supported adequately to prevent the weight being transferred to the appliance flue connection.

When the flue passes through a ceiling or wooden floor, there must be an air gap of 25mm between any part of the flue system and any combustible material. The use of a ceiling plate will facilitate this. Also when the flue passes from one room to another a fire stop must be fitted to prevent the passage of smoke or fire, irrespective of the structural material through which the flue passes.

11.5 Fitting the twin pipe (Ø80/80)

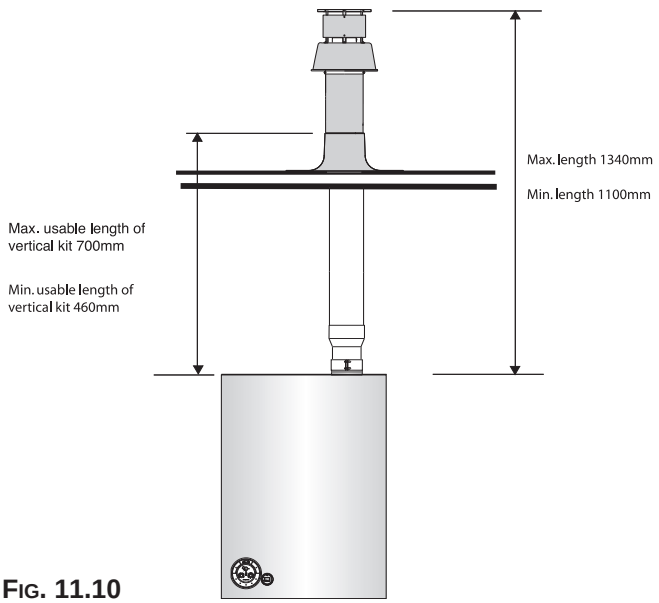

FIG. 11.10

Where it is not possible to terminate the flue within the distance permitted for coaxial flues, the twin flue pipe can be used by fitting a special adaptor to the flue connector and using the aperture for the air intake located on top of the combustion chamber.

Considerations necessary for twin flue installation;

It is most important to avoid any possible condense formation entering the appliance.

Condense may form when the exhaust pipe is longer than 6.6m. If this is the case, there are two options;

1) Where condense will form but can be negated with insulated flue, install the insulated flue ensuring it has a fall of 5mm in every metre away from the boiler.

2) The exhaust flue will have a fall of 3° back to the boiler and a suitable trap will be fitted on the exhaust as close to the boiler as possible, condense will then be suitably disposed of.

Where the flue runs through cold spots, i.e. loft areas, condense is likely to be formed, therefore in such cases a fall back to the boiler and a trap is required.

Always ensure that the flue is adequately supported, avoiding low points. (MTS supply suitable clamps as Part No. 705778).

To utilise the air intake it is necessary to:

1) Take the air intake cover off
2) Assemble the flange on the header supplied with the boiler
3) Insert the restrictor if necessary, on the tube or the elbow
4) Insert the header on the tube or the elbow up until the lower stop (you do not have to use the washer).
5) Insert the elbow/header in the boiler air intake hole and fasten it with screws

Minimum offset distance when using 2x 45° bends

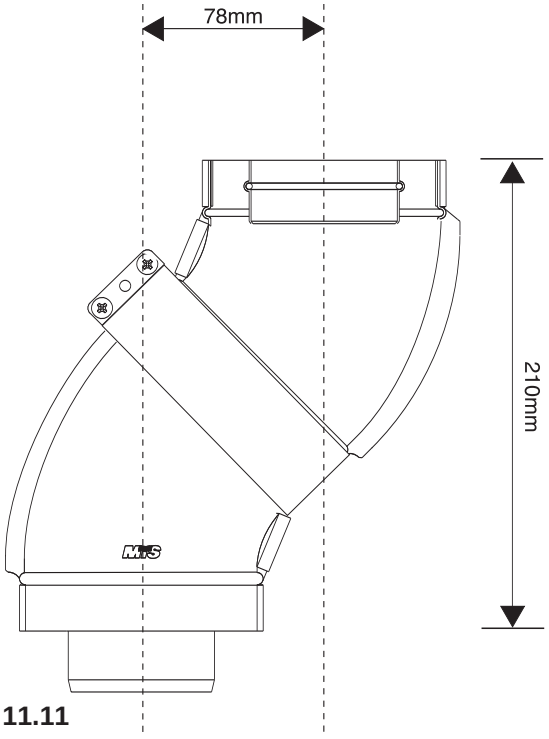

FIG. 11.11

The twin flue pipes can be fitted with or without additional elbows and need no clamps, simply ensure that the red o-ring is inserted in the female end of the flue pipe and push the extension piece fully into the previous section of flue pipe or elbow, check that the o-ring is not dislodged when assembling the flue.

Twin pipe can also be converted back to Coaxial flue to enable vertical termination with a coaxial kit by using the pipe bridge (Twin - Coaxial Adaptor - Part No. 705767). When running the twin flue pipe vertically, a condense trap must always be used on the exhaust pipe.

It is not recommended that the pipe bridge be used for horizontal termination, however in the unlikely event that this proves to be a necessity it is extremely important that the entire flue has a fall of 3° back to the boiler, is suitably trapped and where the 60mm inner flue of the concentric terminal connects to the pipe bridge, this point must be adequately sealed with silicone sealant to avoid condense leakage at this point.

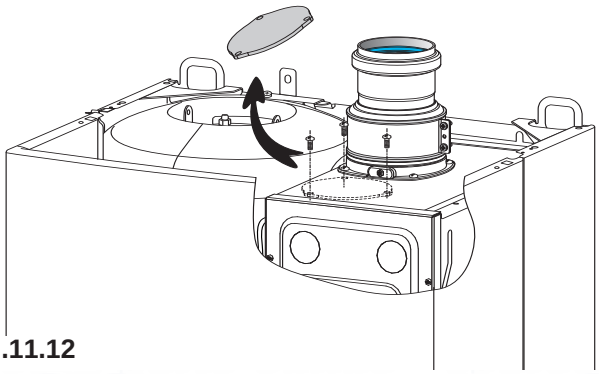

FIG.11.12

This procedure must be done as follows:

1 - Remove the air vent intake in the area indicated in Fig. 11.13, by breaking the perforated ring.
2 - Use a tool to grasp the lid and remove it completely.
3 - Clean any burrs or sharp edges with a knife or an appropriate tool.

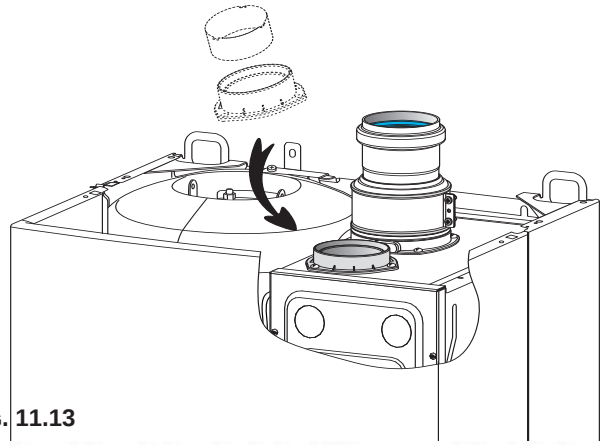

FIG. 11.13

NOTE: Vertical twin flue installations must have a trap on the exhaust. MTS supply a suitable condense trap Part No. 705774 and recommend that this be used in the event that the flue may form condense.

When siting the twin flue pipe, the air intake and exhaust terminals must terminate on the same wall, the centres of the terminals **must** be a minimum of 280 mm apart and the air intake **must** not be sited above the exhaust terminal (refer to Fig. 11.14). The air intake pipe can be run horizontally, however, the terminal and the final 1 metre of flue must be installed with a fall away from the boiler to avoid rain ingress.

It is also strongly recommended that the air intake pipe run be constructed of insulated pipe to prevent condense forming on the outside of the tube.

The maximum permissible flue length for twin flue is dependent on the type of run used.

For flue runs with the intake and exhaust pipes under the same atmospheric conditions (TYPE 4) the maximum length is 34 metres (30kW), for runs with the terminals under different atmospheric conditions (TYPE 5) the exhaust terminal **must** extend 0.5 metres above the ridge of the roof (this is not obligatory if the exhaust and air intake pipes are located on the same side of the building). For TYPE 5 also, the maximum permissible combined length is 56 metres (30kW).

The maximum length is reached by combining the total lengths of both the air intake and exhaust pipes. Therefore a maximum length of 56 metres for example, will allow a flue run of 28 metres for the air intake and 28 metres for the exhaust pipes, also for each 90° elbow 1.3 metres must be subtracted from the total length and for each 45° elbow 1 metre must be subtracted from the total flue length.

Some of the acceptable flue configurations are detailed page 28.

For further information relating to flue runs not illustrated, please contact the Technical Department on 0870 241 8180.

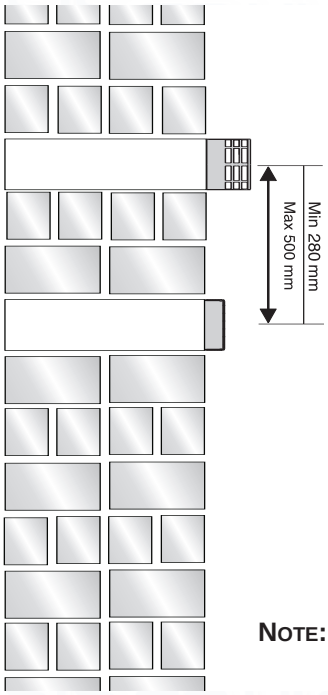

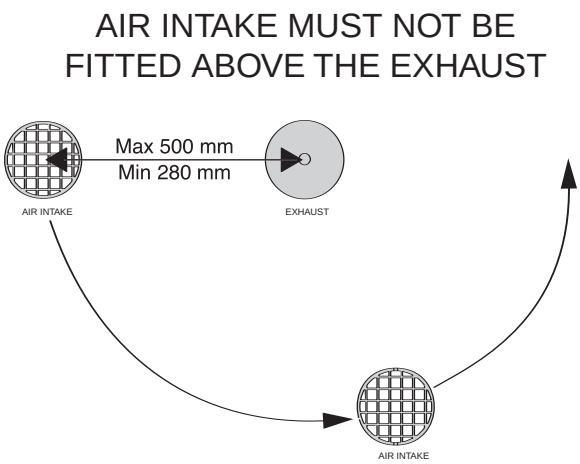

NOTE: IN THE EVENT THAT 280MM CENTRES CANNOT BE ACHEIVED, IT IS PERMISSIABLE TO EXTEND THE EXHAUST PIPE 300MM FROM THE WALL

FIG. 11.14

Concentric outlet 60/100	Restrictor ø 88.5	Without restrictor	Max. length
30 kW (Type 1, Type 2, Type 3)	L min. = 0.3 m L max. = 1 m	L min. = 1 m L max. = 3 m	3 m /

L = total length of gas intake and exhaust ducts.

Twin flue outlet 30 kW	Restrictor ø 42	Without restrictor	Risk of condense forming
Type 4 80/80	L min. > 0 m L max. = 4.5 m	L min. > 4.5 m L max. = 34 m	L > 6.6 m L > 6.6 m
Type 5 80/80 Air intake length 1 m.	L min. > 0 m L max. = 11.5 m	L min. > 11.5 m L max. = 56 m	L > 6.6 m L > 6.6 m

L = total length of gas intake and exhaust ducts.
If the exhaust gas duct length is longer than 6.6 m, you will need a condensate drain

For coaxial systems, the maximum development value L, mentioned in the table above also takes into accout an elbow.
For twin flue isystems the maximum development value L, mentioned in the table includes the exhaust gas/air intake terminal.
Type 5 outlets should respect the following instructions:
1- Keep the same ø 80 mm for the gas intakes and exhaust gas ducts.
2- If you need to insert elbows in the gas intake and exhaust gas ducts, you should consider for each one the equivalent length to be included in the calculation of developed length.
3- The exhaust gas duct should jut above the roof by at least 0.5 m.
4- The intake and exhaust gas ducts in Type 5 must be installed on the same wall, or where the exhaust is vertical and the air intake horizontal, the terminals must be on the same side of the building.

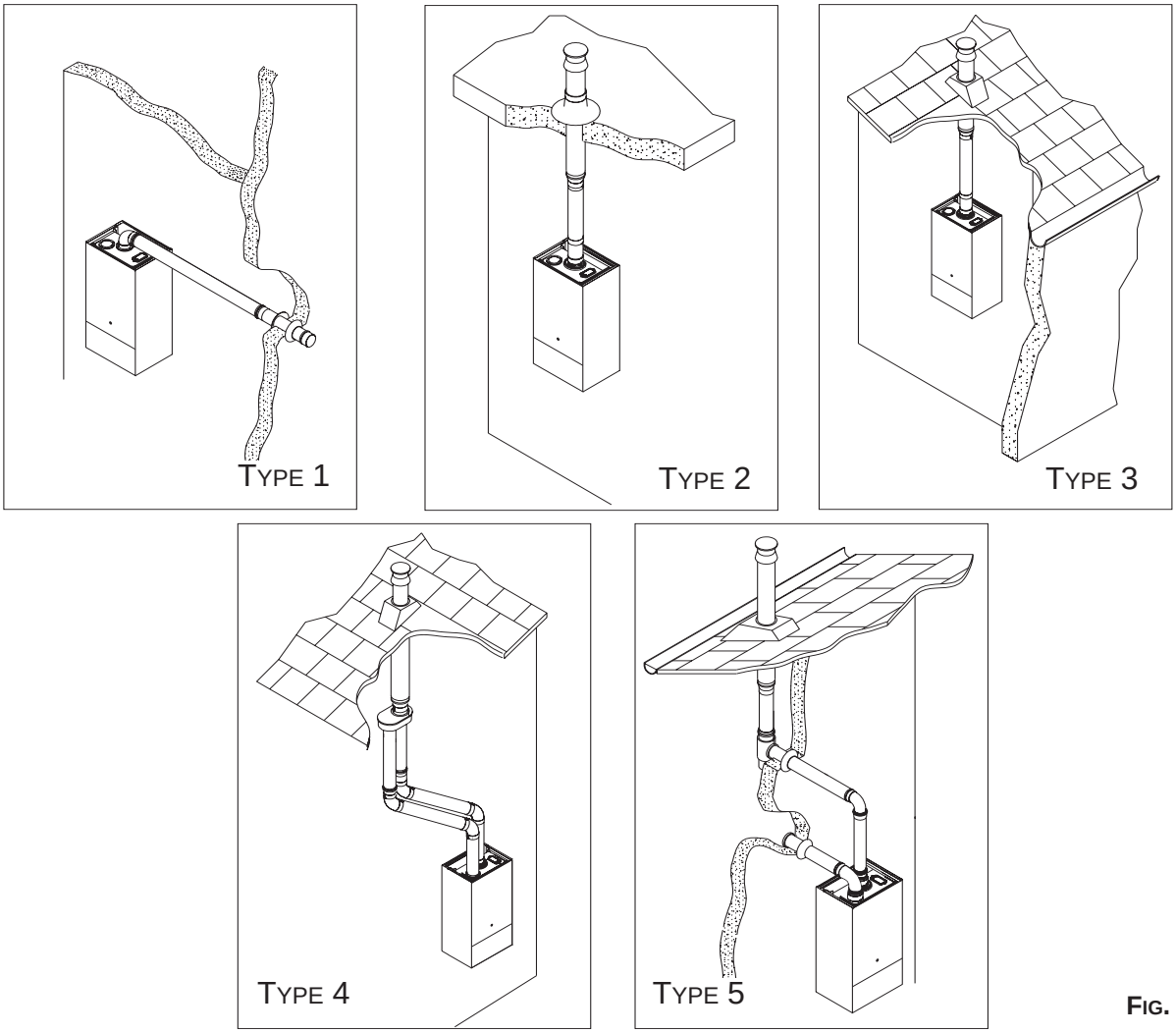

FIG. 11.15

NOTE: DRAWINGS ARE INDICATIVE OF FLUEING OPTIONS ONLY.

12. Electrical Connections

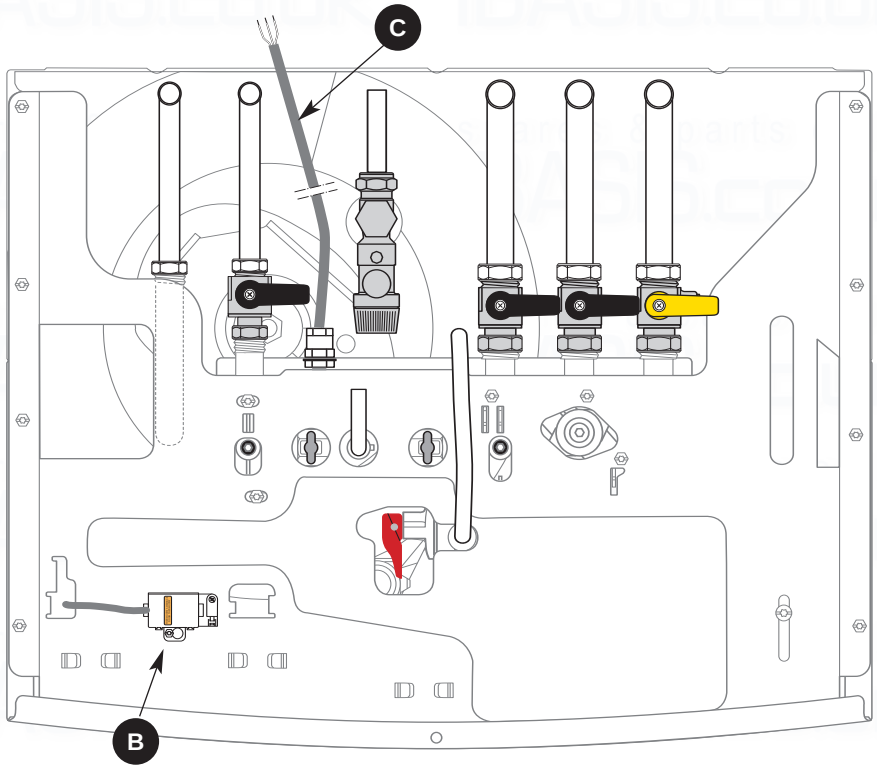

FIG. 12.1

The 220-240 V and earth connection are made by using the lead provided **C** (Fig. 12.1)

IMPORTANT!!

CONNECTION SHOULD BE MADE VIA A 3 AMP FUSED DOUBLE POLE ISOLATING SWITCH WITH CONTACT SEPERATION OF AT LEAST 3MM ON BOTH POLES. ALTERNATIVELY, A FUSED 3 AMP, 3 PIN PLUG AND UNSWITCHED SOCKET MAY BE USED, PROVIDED IT IS NOT USED IN A ROOM CONTAINING A BATH OR SHOWER. IT SHOULD ONLY SUPPLY THE APPLIANCE.

External Controls

Open the cover **B** with a screwdriver (Fig. 12.2)

The room thermostat is connected onto this connector **B** (Fig. 12.1)

- remove the bridge **S** (Fig. 12.3)
- connect the thermostat in place of the bridge **S** (Fig. 12.3)
- If a remote time clock is to be fitted, using a volt-free switching time clock, connect the wires from the time clock following the points above. (see also Fig. 12.4)

Note: Before connecting an external time clock, disconnect the internal time clock as described in Section 18.3.4 (page 45)

IMPORTANT!!

DO NOT RUN 240 V AND 24 V CABLES TOGETHER.

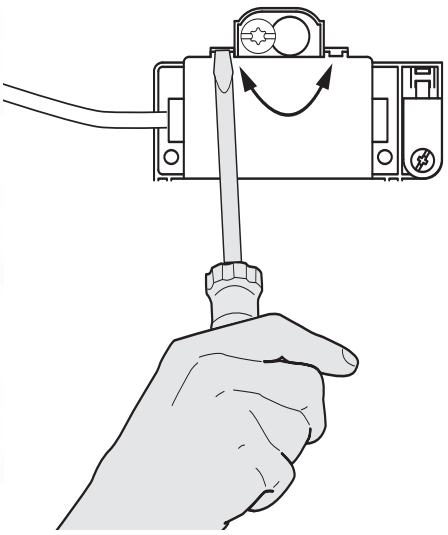

FIG. 12.2

Room thermostat Connector

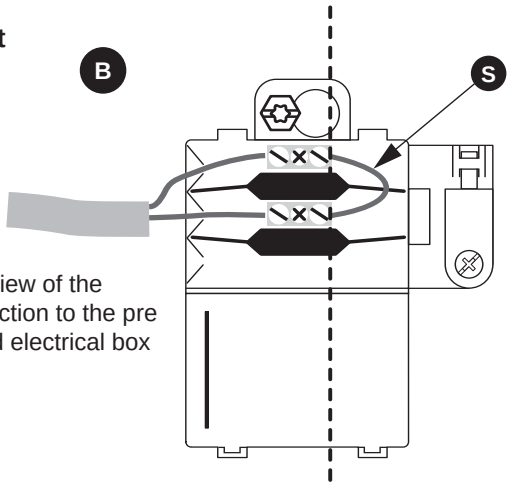

Side view of the connection to the pre cabled electrical box

FIG. 12.3

spares & parts online IBASIS.CO.UK

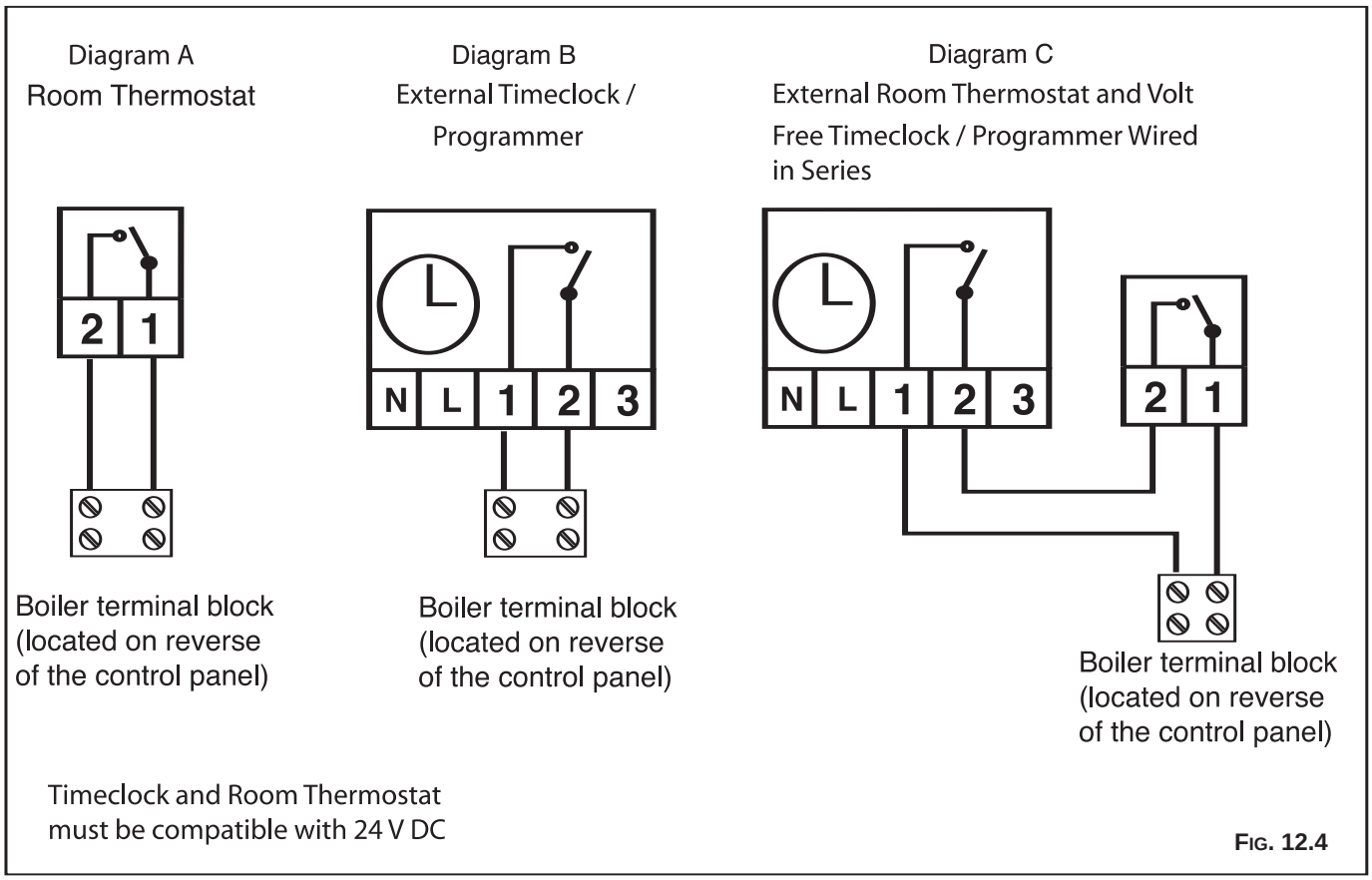

FIG. 12.4

13. Electrical/System Diagrams

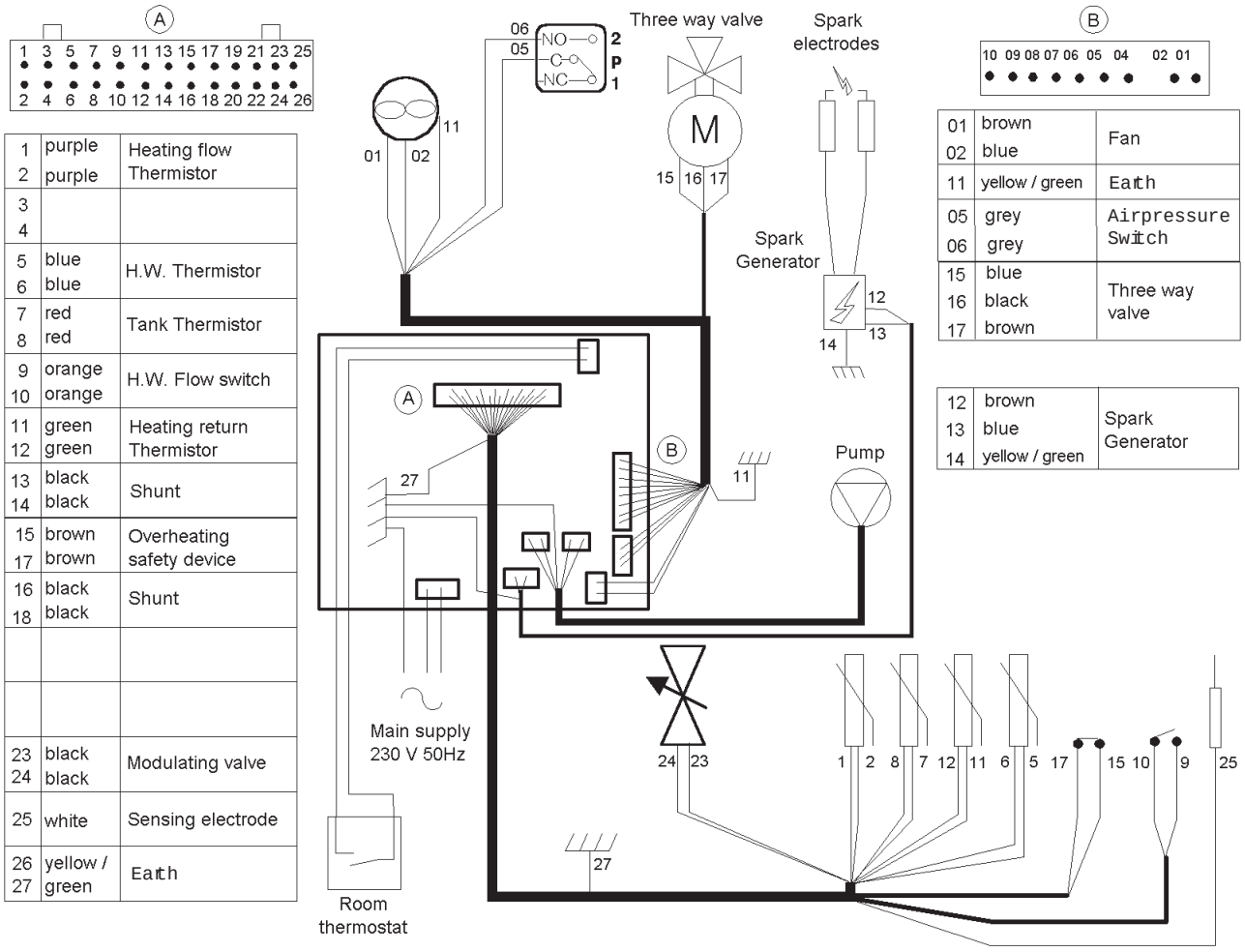

1 2	purple purple	Heating flow Thermistor
3 4		
5 6	blue blue	H.W. Thermistor
7 8	red red	Tank Thermistor
9 10	orange orange	H.W. Flow switch
11 12	green green	Heating return Thermistor
13 14	black black	Shunt
15 17	brown brown	Overheating safety device
16 18	black black	Shunt
23 24	black black	Modulating valve
25	white	Sensing electrode
26 27	yellow / green	Earth

01 02	brown blue	Fan
11	yellow / green	Earth
05 06	grey grey	Airpressure Switch
15 16 17	blue black brown	Three way valve

12 13 14	brown blue yellow / green	Spark Generator

14. Water circuit Diagrams

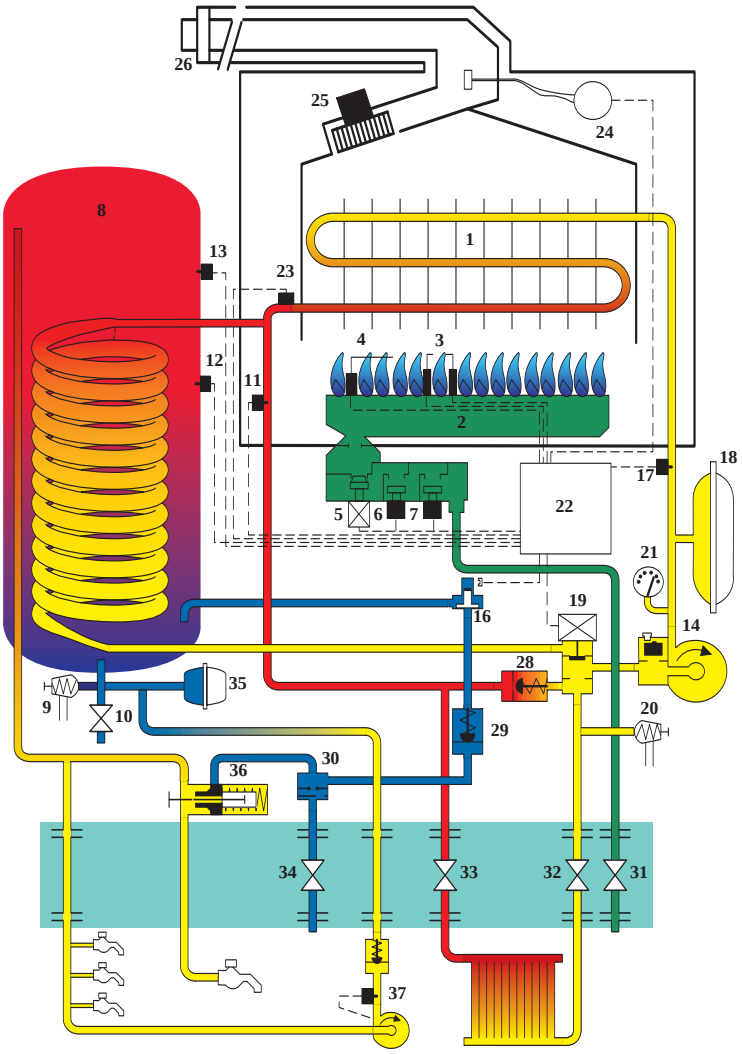

LEGEND :

1. - Main heat exchanger
2. - Burner
3. - Ignition electrodes
4. - Flame detection electrode
5. - Modulating valve
6. - Safety valve
7. - Safety valve
8. - Domestic hot water tank
9. - Water tank valve
10. - Water service tap
11. - Heating flow thermistor
12. - Tank thermistor
13. - Hot water control thermistor
14. - Pump
16. - DHW activator
17. - Heating return thermistor
18. - Heating expansion vessel
19. - Three way valve
20. - Heating safety valve
21. - Pressure gauge
22. - Electrical box
23. - Overheating safety device
24. - Air pressure switch
25. - Fan
26. - Flue pipe
27. - By-pass
28. - Non-return valve
29. - Flow limiter
30. - Filter
31. - Gas tap
32. - Heating return tap
33. - Heating flow tap
34. - Water service tap
35. - DHW expansion kit
36. - Thermostatic mixing kit (optional)
37. - D.H.W. circulation kit (optional)

15. COMMISSIONING

15.1 Initial Preparation

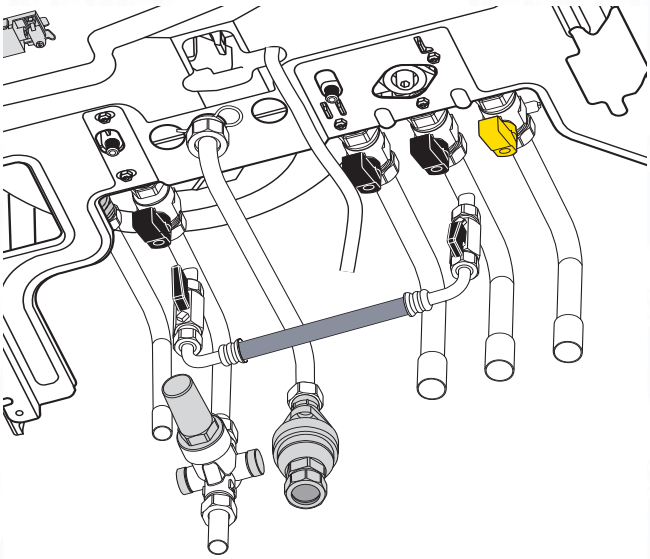

FIG. 15.1

MTS (GB) Limited support the benchmark initiative. Within the information pack you will find a copy of the benchmark Log Book. It is important that this is completed in the presence of your customer, they are shown how to use it, and it is signed by them. Please instruct your customer that they must have their benchmark Log Book with them whenever they contact a service engineer or us.

Preliminary electrical system checks to ensure electrical safety must be carried out by a competent person i.e. polarity, earth continuity, resistance to earth and short circuit.

FILLING THE HEATING SYSTEM:

Lower the control panel and remove the case panels (see **SECTION 15.3** for further information).

Open the central heating flow and return cocks supplied with the connection kit.
Unscrew the cap on the automatic air release valve one full turn and leave open permanently.
Close all air release valves on the central heating system.
Gradually open valve(s) at the filling point (filling-loop) connection to the central heating system until water is heard to flow, do not open fully.
Open each air release tap starting with the lowest point and close them only when clear water, free of air, is visible.

Purge the air from the pump by unscrewing the pump plug anticlockwise, also manually rotate the pump shaft in the direction indicated by the pump label to ensure the pump is free.

Refit the pump plug.
Continue filling the system until at least 1.5 bar registers on the pressure gauge.
Inspect the system for water soundness and remedy any leaks discovered.

FILLING OF THE D.H.W. SYSTEM:

Close all hot water draw-off taps.
Open the cold water inlet cock supplied with the connection kit.
Open slowly each draw-off tap and close them only when clear water, free of bubbles, is visible.

GAS SUPPLY:

Inspect the entire installation including the gas meter and test for soundness. The gas installation should be in accordance with the relevant standards. In GB this is BS6891 and in IE this is the current edition of I.S.813.

The connection to the appliance is a 15mm copper tail located at the rear of the gas service cock (Fig. 10.3).

If the gas supply for the boiler serves other appliances ensure that an adequate supply is available both to the boiler and the other appliances when they are in use at the same time.

Pipe work must be of an adequate size. Pipes less than the 22mm should not be used.
Open the gas cock (supplied with the connection kit) to the appliance and check the gas connections on the appliance for leaks.

When the installation and filling are completed, flush the system while cold, refill, turn on the Central Heating system (**Section 3**) and run it until the temperature has reached the boiler operating temperature.

The system must then be immediately flushed through.

The flushing procedure must be in line with BS 7593:1992 code of practice for treatment of water in domestic hot water central heating systems.

During this operation, we highly recommend the use of a central heating flushing detergent (Fernox Superfloc or equivalent), whose function is to dissolve any foreign matter that may be in the system.

Substances different from these could create serious problems to the pump or other components.

The use of an inhibitor in the system such as Fernox MB-1 or equivalent is strongly recommended to prevent corrosion (*sludge*) damaging the boiler and system, following the flushing procedure..

Failure to carry out this procedure may invalidate the appliance warranty.

15.2 Completion

For IE it is necessary to complete a “Declaration of Conformity” to indicate compliance to I.S.813. An example of this is given in the current edition of I.S.813. In addition it is necessary to complete the benchmark Log Book.

15.3 Removal and fitting of the case - Servicing

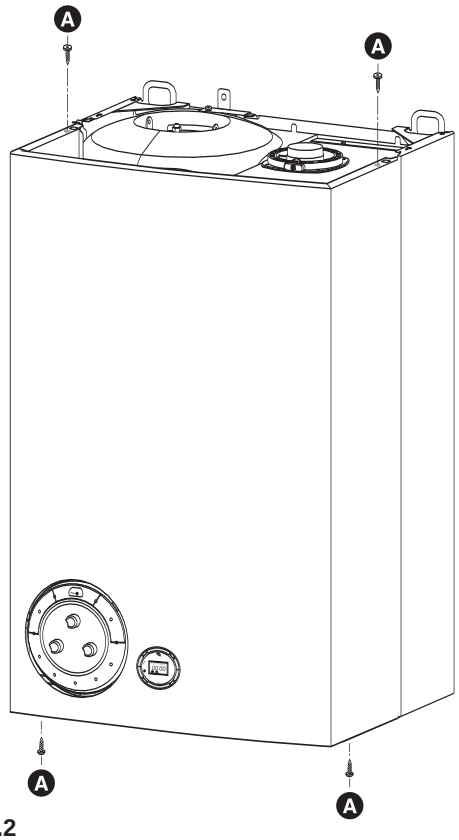

FIG. 15.2

Removal of the case

- undo the 4 case retaining screws (Fig. 15.1)
- disengage the clips
- remove the case

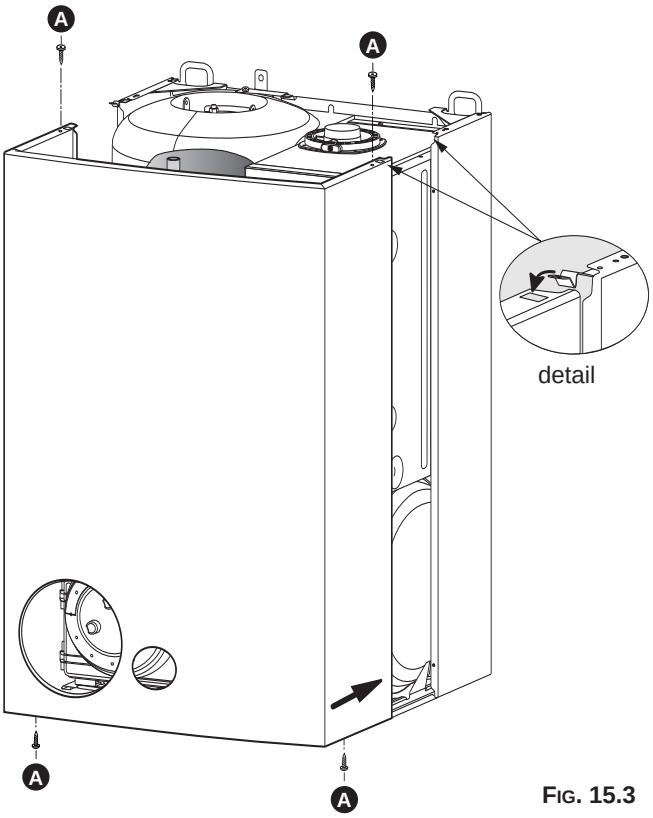

FIG. 15.3

Fitting the case

Remove the protective film from the front and rear of the case

- position the case (Fig. 15.2)
- engage both clips in the case (see detail)
- fasten the 4 retaining screws **A** on the front

Servicing

To maintain the unit, it is possible to move the electrical box without having to disconnect it. The electrical box is clipped onto the heating outlet pipe or onto the bottom of the chassis. (Fig. 15.3)

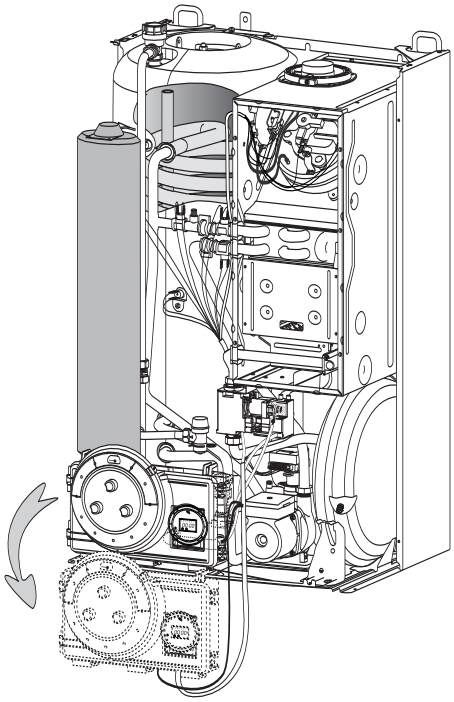

FIG. 15.4

15.4 Control Panel

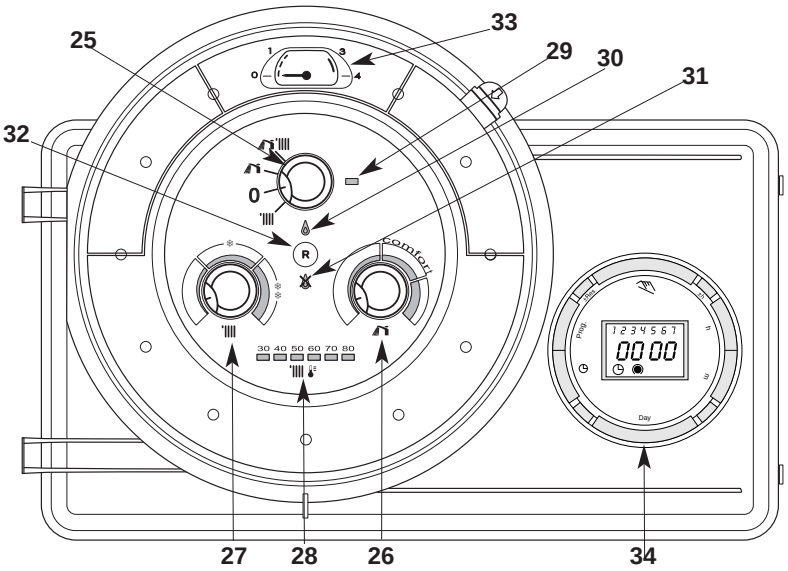

Legend:

25 - Selector Knob :

- Central Heating and Hot Water
- Hot Water Only
- O Stand-by
- Central Heating Only

26 - D.H.W. temperature control knob

27 - C.H. temperatre control knob

28 - Heating temperature indicator and diagnostic indicator

29 - Green indicator - Power ON

30 - Orange indicator - Burner ON

31 - Red indicator - Lock out / flame failure

32 - Reset button

33 - Pressure gauge

34 - Time clock

15.5 Initial Start-up

The checks to be run before initial start-up are as follows:

1. Make sure that:
   - the screw on the automatic air valve has been loosened when the system is full;
   - If the water pressure in the system is below 1.5 bar, bring it up to the appropriate level;
   - Check to ensure the gas cock is open;
   - Make sure that the electrical connection has been made properly and that the earth wire is connected to an efficient earthing system

To obtain hot water only

- Turn the selector switch **25** to the « » position, the green LED **29** will light; the orange LED **30** will light to indicate that the burner is alight.
- To adjust the temperature of the domestic hot water, it is necessary to rotate the control knob **26** « » clockwise to increase and anti-clockwise to decrease the temperature until the desired temperature is achieved.

To obtain central heating and domestic hot water

- Turn the selector switch **25** to the « » position, the green LED **29** will light; the orange LED **30** will light to indicate that the burner is alight.
- Upon a demand for domestic hot water the operation of the central heating will be interrupted until the hot water tank has been reheated to the set temperature.
- The control knob **27** « » allows you to adjust the water temperature in the central heating circuit according to seasonal requirements.
- Turn the control knob **27:**
- Clockwise in cold weather
- Anti-clockwise in mild weather (by turning the knob fully anti-clockwise, the Central Heating will switch off).
- The LEDs **28** will display the temperature of the water in the central heating circuit.
- Furthermore, if your home is fitted with a room thermostat, set it to the desired indoor temperature.
- The orange LED **30** will light each time the burner operates.

To obtain central heating only

- Turn the selector switch **25** to the « » position, the green LED **29** will light.
- Ensure that the time clock is on (see Section 4), and if fitted that the room thermostat is calling for heat.
- The control knob **27** « » allows you to adjust the water temperature in the central heating circuit according to seasonal requirements.
- Turn the control knob **27:**
- Clockwise in cold weather
- Anti-clockwise in mild weather (by turning the knob too far, the Central Heating will switch off).
- The LEDs **28** will display the temperature of the water in the central heating circuit.
- Furthermore, if your home is fitted with a room thermostat, set it to the desired indoor temperature.
- The orange LED **30** will light each time the burner operates.

Stopping the central heating

- Turn the selector switch **25** to the " " position. In this state the boiler will only produce domestic hot water,alternatively, you can turn the time clock off or if fitted turn the room thermostat down.

Stand-by mode

- Turn the selector switch **25** to the «**O** » position, the green LED **29** will remain alight. The appliance will remain in stand-by mode unless the anti-frost device is activated.

Turn off the appliance*

- Turn the selector switch **25** to the «**O**» position
- Turn off the external power supply to the boiler.

*** NOTE: IN THIS STATE THE APPLIANCES ANTI-FROST DEVICE IS INACTIVE**

The boiler is fitted with a device, which in the event that the water temperature falls below 8°C the pump activates and runs until a temperature of 18°C is attained. In the event that the water temperature falls below 3°C, the diverter valve switches to Domestic Hot Water and the burner fires on minimum power until a temperature of 33°C is attained.

This device is only activated when the boiler is operating perfectly and

- the system pressure is sufficient;
- the boiler is powered electrically;
- gas is available.

15.6 Sequence of Operation

Central Heating Mode

(Unless the hot water cylinder is being heated), when the time clock and room thermostat are calling for heat, the pump starts. When all other demands are in operation and the safety devices are satisfied (eg. fan and air pressure switch) the burner goes through an ignition sequence. Once the flame is detected by the ionisation system, for the initial 30 seconds of operation the electronics monitor the ΔT^{o} between the flow and return NTC's to ensure there is a correct flow through the appliance.

- If the ΔT^{o} is less than 40°C the central heating cycle continues.
- If the ΔT^{o} is equal to or more than 40°C, or if the return temperature is more than 10°C above the flow temperature then the burner switches off and the relevant error code is shown on the display.

The flow NTC adjusts the output of the boiler by modulating the burner between the minimum and maximum pressure.

By comparing the actual temperature in relation to the set point on the thermostat control knob. The thermostat control knob regulates the temperature to between approximately 40°C to 85°C.

Once the maximum set temperature has been achieved the burner switches off. To avoid rapid burner cycling the re-ignition of the burner can be delayed between 30 seconds and 3 minutes.

When the boiler switches off because either the time clock or room thermostat is satisfied there is a pump over run which is adjustable between 0 to 5 minutes to avoid residual heat build up.

Hot Water Mode (with no water flow rate)

When the storage temperature of the tank (measured by the uppper NTC on the tank) is 4°C or more below the set point of the hot water control thermostat the appliance operates to recover the storage temperature. The 3 way valve moves into the DHW position, the pump runs, the burner lights and the ionisation electrodes detect the prescence of a flame. The primary water is pumped around a calorifier in the storage cylinder and heats the water indirectly. The upper NTC continues to monitor the cylinder temperature and modulates the burner via the gas valve. The flow NTC limits the temperature to 85°C.

When the cylinder temperature is equal to the set temperature the burner switches off and the pump stops. If the primary water temperature is greater than or equal to 85°C the fan over runs until the primary temperature drops to 80°C to avoid residual heat build up.

Hot Water Mode (with water flow rate)

With a draw off rate equal to or greater than 1.9l/min:
When the domestic hot water flow switch detects a water flow rate the 3 way valve moves into the DHW position, the pump, fan and controls operate and the burner lights. The upper NTC on the cylinder regulates the temperature of the hot water by adjusting the modulation rate of the gas valve. If whilst drawing DHW the difference in temperature monitored between the upper NTC and the lower NTC on the cylinder is equal to or greater than 1°C the electronics increases the the output of the appliance to anticipate the reheating of the cylinder. The lower NTC is therefore used as a booster.

After drawing DHW the fan over runs if the primary water is equal to or greater than 85°C.

Hot Water Mode (with water flow rate)

With a draw off rate equal to or less than 1.9l/min:
With a DHW flow rate insufficient to operate the DHW flow switch the upper NTC measures the temperature of the water in the cylinder. If the ΔT^{o} is equal to or greater than 5°C in relation to the thermostat set point, the 3 way valve moves into the DHW position, the controls and systems operate and the burner lights. The upper NTC regulates the temperature of the DHW in relation to the thermostat set point. When the set point is reached the burner switches off and the fan over runs if the primary water temperature is equal to or greater than 85°C.

15.7 Operational Adjustments

SETTINGS

The boiler is delivered with all dip switches set to the **OFF** position with the exception of **B2** which is set to the **ON** position (Fig. 15.6). The maximum heating power can be adjusted by turning the potentiometer (**P1)** between the **Min** and **Max** position.

To do this it is first necessary to open the electrical box and proceed as follows:

Switch off the external power supply, remove the front panel (Section 18.2.1 and 18.2.2), Open the box by pressing the tab **P** (Fig. 15.5), the adjustment potentiometers are on the P.C.B. behind the tab **P**.

- **A1** Sets the pump to operate permanently or stop when the room thermostat is satisfied.
- **A2** Sets the operation of the pump to low or high speed for Central Heating operation.
- **A3** Adjusts the Anti-Cycle delay for the Central Heating from 30 seconds to 3 minutes.
- **A4** Sets the burner to fully modulating or step modulating (ON/OFF).
- **B1** Sets the maximum Central Heating Temperature to either 85°C or 90°C
- **B2** Selects or de-selects the programmer (For the UK and IE it **must** always be in the **ON** position).
- **B3** No function
- **B4** Sets the boiler to work in conjunction with the D.H.W. thermostatic cartridge kit, when in the on position the D.H.W. is set to a fixed temperature of 60°C regardless of the postion of the D.H.W. temperature control knob **26** (Fig. 3.1)

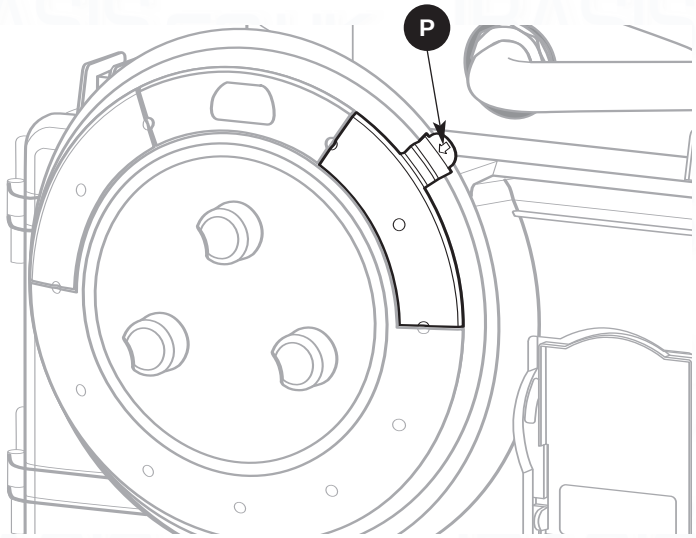

Fig. 15.5

Note : After the power has been cut to the boiler, or the P.C.B. has been reset the TAC is cancelled for 3 minutes.

- **P1** : Adjusts the Central Heating ouput power (see Section 16).
- **P2** : Adjusts the ignition pressure of the boiler (soft-light) between the minimum and maximum setting

The **J12** connector provided with a shunt is designed to connect to either a room thermostat or external programmer (see Section 12).

Once all adjustments have been completed, replace the tab **P** and reassemble the boiler.

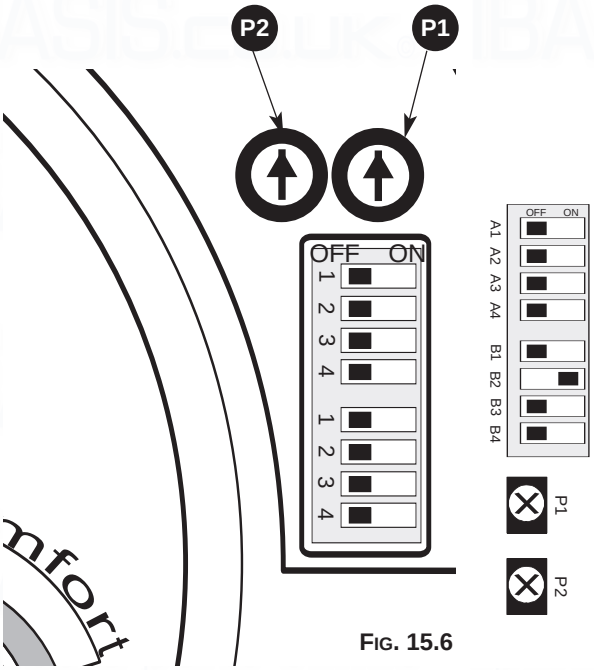

Fig. 15.6

Factory setting

OFF	ON
Pump stops when room thermostat is satisfied	Pump operates continuously
Pump operates at high speed	Pump operates at low speed
Anti-cycle 3 minutes	Anti-cycle 30 seconds
Burner fully modulating	Burner step modulating (On/Off)
Maximum heating temperature 85°C	Maximum heating temperature 90°C
Programmer disabled for Central Heating	Programmer enabled for Central Heating
D.H.W. thermostatic cartridge: not fitted	D.H.W. thermostatic cartridge: fitted

15.8 Combustion Analysis

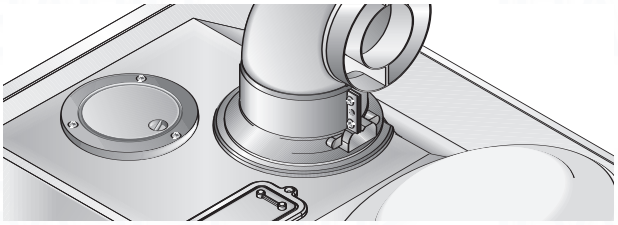

The boiler is designed to make it easy to analyse the combustion by-products.
Using the specially designed test points, readings can be taken on the temperature of the combustion by-products and of the combustion air, as well as of the concentrations of O_2 and CO_2, etc.
The best maximum-power test conditions for the heating system are obtained by turning the Selector Knob **25** (Section 15.4) to central heating only and turning the C.H. temperature control knob **27** to maximum.

15.9 Boiler Safety Systems

If a fault occurs in the appliance, one or more LEDs (28 Fig.3.1) flash according to the fault type listed in the table below.

Code						FAULT INFORMATION
30	40	50	60	70	80	
❍	❍	❍	❍	❍	●	Overheating safety feature
❍	❍	❍	❍	●	●	No flame detection
❍	❍	❍	●	❍	●	Anti-frost mode on (pump in operation)
❍	❍	❍	●	●	❍	Anti-frost mode on (burner and pump in operation)
❍	❍	❍	●	●	●	Lack of water circulation
❍	❍	●	❍	❍	❍	Primary water circulation defect
❍	❍	●	❍	❍	●	D.H.W. thermistor faulty (open cicrcuit)
❍	❍	●	❍	●	❍	D.H.W. thermistor faulty (short circuit)
❍	❍	●	❍	●	●	Central heating return thermistor faulty (open circuit)
❍	❍	●	●	❍	❍	Central heating return thermistor faulty (short circuit)
❍	❍	●	●	❍	●	Central heating flow thermistor faulty (open circuit)
❍	❍	●	●	●	❍	Central heating flow thermistor faulty (short circuit)
❍	●	❍	❍	❍	●	Low water pressure in the heating system
❍	●	❍	❍	●	❍	Re-ignition attempt
❍	●	❍	●	❍	❍	Wiring problem (or fuse 1.25 A)
❍	●	❍	●	❍	●	Fan on but does not activate air pressure switch
❍	●	❍	●	●	❍	Fan off but air pressure switch fails to return to off position
❍	●	❍	●	●	●	Low fan speed
❍	●	●	❍	❍	❍	Operating control fault of the fan
❍	●	●	❍	❍	●	Thermistor «**comfort**» (open circuit)
❍	●	●	❍	●	❍	Thermistor «**comfort**» (short circuit)
❍	●	●	❍	●	●	Cylinder temperature 5°C above set point
●	❍	❍	❍	❍	❍	Communication defect with the main PCB

❍ **= LED off**

● **= LED blinking**

16. Gas Adjustments

Fig. 16.1

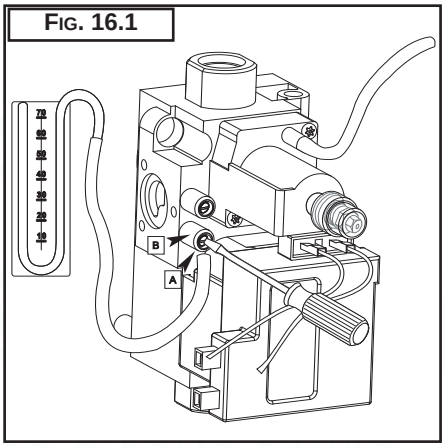

Fig. 16.2

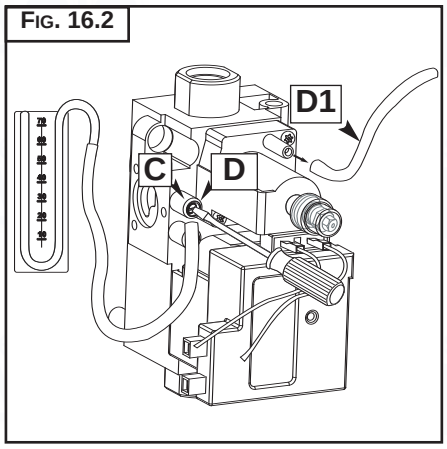

Fig. 16.3

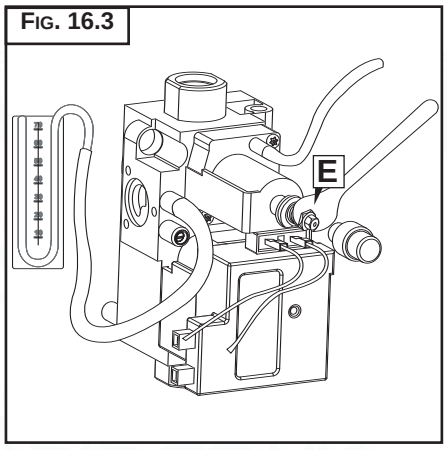

Fig. 16.4

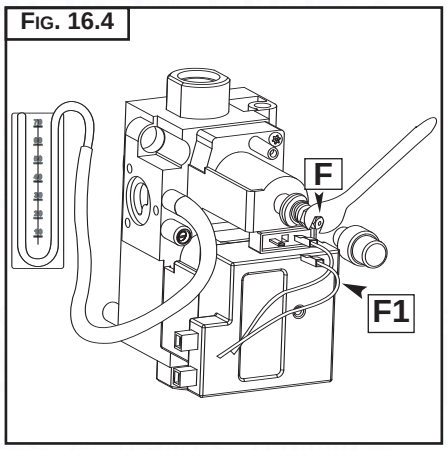

When converting to a gas different from the one for which the boiler is equipped, you should replace the parts delivered with the conversion kit, and make the gas valve adjustments as described below:

Setting the minimum and the maximum power of the boiler
Check that the supply pressure and dynamic pressure to the gas valve is a minimum of 20 mbar for natural gas. To do this, loosen the screw **"A"**.

Fit the pipe of the pressure gauge to the inlet pressure connection of the gas valve **"B"** check for the correct standing pressure, then operate the appliance and check for the correct working pressure. When you have completed this operation, replace the screw **"A"** securely into its housing to seal off the gas (check for tightness).
To check the pressure supplied by the gas valve to the burner, loosen the screw **"C"**. Fit the pipe of the pressure gauge to the pressure outlet test point of the gas valve **"D"**.

Disconnect the compensation pipe **"D1"** either from the gas valve or from the sealed chamber.

Turn the boiler on, and ensure that the hot water temperature control knob is set to maximum. Turn on the boiler by running a hot water tap. Adjust the 10mm nut **"E"** on the modureg to set the maximum gas pressure, turn the nut clockwise to increase and anti clockwise to decrease the pressure until the required pressure is achieved (see **Maximum Burner Pressure Table** page 41).

To set the minimum power, disconnect a supply terminal **"F1"** from the modureg and adjust screw **"F"** (ensure the 10mm nut is held in position). Turn the screw clockwise to increase the gas pressure and counter-clockwise to decrease the gas pressure (displayed on the pressure gauge) corresponding to the minimum power (see **Minimum Burner Pressure Table** page 41).

When you have completed the above operations, turn off the hot water tap, re-connect the supply terminal to the modureg on the gas valve and replace the cap on the screw of the modureg.

Setting the maximum heating circuit power
To set the maximum heating circuit power, turn the boiler on and turn the Central Heating temperature control knob to maximum, ensuring all extermal controls are calling for heat.

Remove the inspection panel of the P.C.B. and fit a small cross-head screwdriver in to potentiometer P1 (see page 38). Turn clockwise to increase the pressure or counter-clockwise to reduce the pressure. Adjust the setting to the required heating pressure value (displayed on the pressure gauge), as indicated in the tables shown on page 41.

Turn off the boiler by placing the main switch to the "OFF" position.

Adjusting the ignition output
The potentiometer P2 (Fig. 15.6) on the PCB permits this adjustment (**see Operational Adjustments on page 38**).

Disconnect the detection electrode **(see section 18.4.4)**.

Start the boiler and during the ignition sequence adjust the P2 potentiometer until the gas pressure reads the required gas pressure as per the table on page 41.

Genus 30 Plus			
Maximum Heating Circuit Power			
Gas :	**G20**	**PROPANE**	**BUTANE**
Output (kW)	Inlet Pressure (mbar)	Inlet Pressure (mbar)	Inlet Pressure (mbar)
8	0.7	7.1	5.6
12	1.6	15.3	11.5
16	2.8	21.7	15.2
20	4.4	29.5	21.3
24	6.3	30.2	23.5
28	8.6		

Once the gas pressure is set turn off the boiler and re-connect the detection electrode.

NB.: It may be necessary to reset the flame failure reset a number of times during this operation.

Remove the pipe from the test point and tighten the screw "**C**" to the pressure test point in order to seal off the gas. Carefully check the pressure test points for gas leaks (valve inlet and outlet), reconnect the compensation pipe **D1**.

IMPORTANT!
Whenever you disassemble and reassemble the gas connections, always check for leaks using a leak detection fluid.

NOTE: ALWAYS CHECK THE GAS RATES FOLLOWING ADJUSTMENT.

	Natural gas G20	Butane L.P.G. G30	Propane L.P.G. G31
Gas rate max.....	3.52 m³/h	2.63 kg/h	2.58 kg/h
Gas rate min.....	1.2 m³/h	0.89 kg/h	0.88 kg/h
Nominal inlet pressure	20 mbar	28 mbar	37 mbar
Burner injector diameter.....	1.23 mm	0.74 mm	0.74 mm
Gas valve restrictor diameter	9.0 mm	9.0 mm	9.0 mm

(1 mbar = 10.197mm column of water)
The outlet pressure of the gas cock is obtained by completely loosening the screw on the solenoid. The maximum pressure of the gas to the burner will be equal to the nominal delivery pressure minus the head loss within the gas valve.

16.1 Changing the Type of Gas

The boiler can be converted to use either methane (natural) gas (G20) or LPG (G30 - G31) by an Authorised Service Centre.

The operations that must be performed are the following:
1. Adjust the maximum and minimum thermal capacity values for the boiler (see table below).

Minimum Pressure		Nominal Pressure	
G20	G30-G31	G20	G30-G31
2.7	12.5	12.5	27.9

17. Maintenance

It is recommended that the following checks be made on the boiler at least once a year:

1 - Check the seals for the water connections; replacement of any faulty seals.
2 - Check the gas seals; replacement of any faulty gas seals.
3 - Visual check of the entire unit.
4 - Visual check of the combustion process and cleaning of the burners if needed.
5 - If called for by check no. 3, dismantling and cleaning of the combustion chamber.
6 - If called for by check no. 4, dismantling and cleaning of the injectors.
7 - Visual check of the primary heat exchanger:
- check for overheating in the blade assembly;
- clean the exhaust fan if needed.

8 - Adjustment of the flow rate of the gas: flow rate for lighting, partial load and full load.
9 - Check of the heating safety systems:
- safety device for maximum temperature;
- safety device for maximum pressure.

10 - Check of the gas safety systems:
- safety device for lack of gas or flame ionisation (detection electrode);
- safety device for gas cock.

11 - Check of the electrical connection (make sure it complies with the instructions in the manual).
12 - Check of domestic hot water production efficiency (delivery rate and temperature)
13 - Check pressure in the Domestic Expansion Vessel and top up as necessary.
14 - Check manually by turning the test knob of the Temperature & Pressure Relief Valve.
15 - Check manually by turning the test knob the Expansion Relief Valve.
16 - Check discharge pipes from both the central heating and domestic hot water for obstructions.
17 - Check of the general performance of the unit.
18 - General check of the discharge/ventilation of the combustion by products.

NOTE: THESE CHECKS ARE NOT EXHAUSTIVE

18. Servicing Instructions

To ensure efficient safe operation, it is recommended that the boiler is serviced annually by a competent person.

Before starting any servicing work, ensure both the gas and electrical supplies to the boiler are isolated and the boiler is cool.
Before and after servicing, a combustion analysis should be made via the flue sampling point (please refer to Section 15.8).

After servicing, preliminary electrical system checks must be carried out to ensure electrical safety (i.e. polarity, earth continuity, resistance to earth and short circuit).

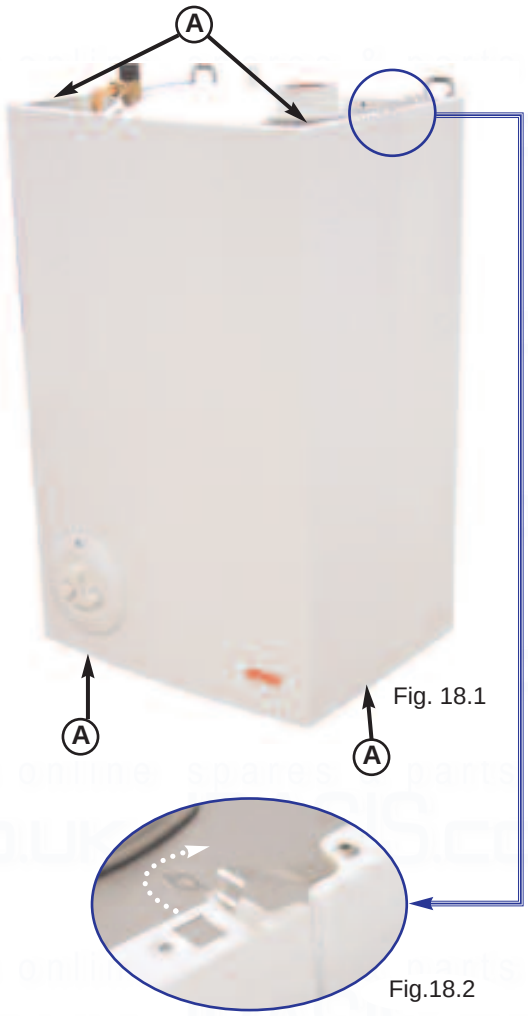

Fig. 18.1

Fig.18.2

18.1 Replacement of Parts

The life of individual components vary and they will need servicing or replacing as and when faults develop.
The fault finding sequence chart in Section 19 will help to locate which component is the cause of any malfunction, and instructions for removal, inspection and replacement of the individual parts are given in the following pages.

18.2 To Gain General Access

All testing and maintenance operations on the boiler require the control panel to be lowered. This will also require the removal of the casing.

18.2.1 Removing the front panel :

1. Remove the 4 retaining screws "**A**" *(see fig. 18.1)*;

2. Disengage the 2 clips *(see fig. 18.2);*

3. Remove the front panel from the rest of the casing *(see fig. 18.3).*

Fig. 18.3

18.2.2 Removing the control panel :

1. Remove the front panel as above;

2. Pull the control panel toward you to disengage it from the bottom of the chassis *(see fig. 18.4)*;

3. Clip the top of the control panel onto the bottom of the chassis. *(see fig. 18.5)*.

Fig. 18.4

Fig. 18.5

18.3 Access to the Control System

18.3.1 Removing the main P.C.B.

1. Isolate electricity and carry out step ***18.2.1*** ;
2. Open the control box by pushing on the 2 right clips "**B**" *(see Fig. 18.6)* ;
3. Push on the pressure gauge to disengage it *(see Fig. 18.7)* ;
4. Disconnect all the connectors on the P.C.B. ;
5. Remove the T20 screw in the middle of the P.C.B. , then pull the card toward you *(see Fig.18.8 and Fig 18.9)* ;
6. Reassemble in reverse order.

Fig. 18.6

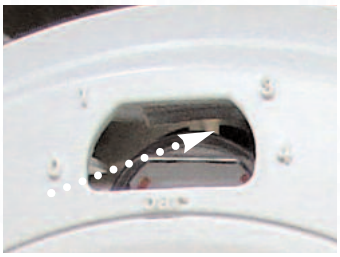

Fig. 18.7

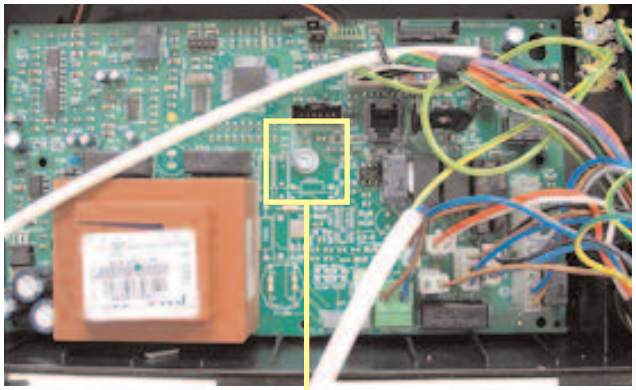

Fig. 18.8

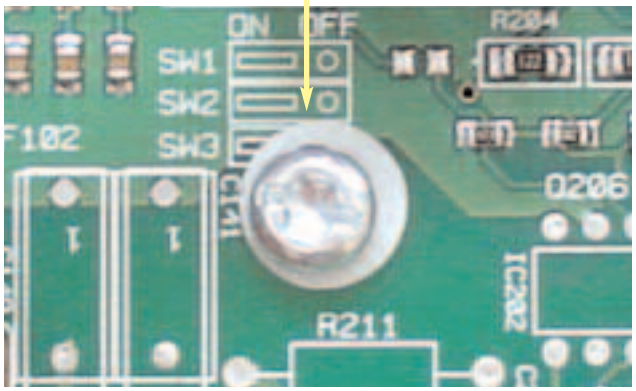

Fig. 18.9

18.3.2 Removing the display P.C.B.

1. Isolate electricity;
2. Carry out step ***18.2.1***;
3. Open the control box *(see Fig. 18.6)*;
4. Remove the three control knobs *(see Fig.18.10 & 18.11)*;
5. Remove the display card connector on the main P.C.B. *(see Fig.18.12);*
6. Remove the five T20 screws on the P.C.B., then pull the card toward you *(see Fig.18.13)*;
7. Reassemble in reverse order.

Fig. 18.10

Fig. 18.11

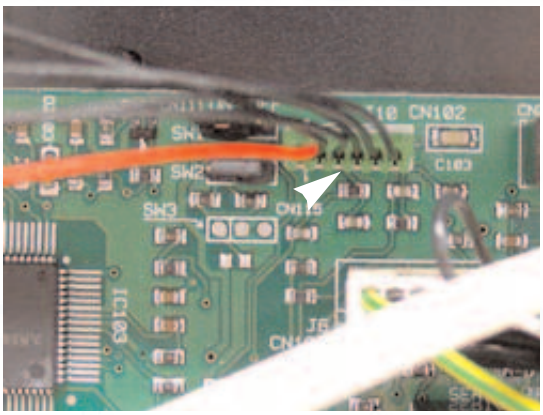

Fig. 18.12

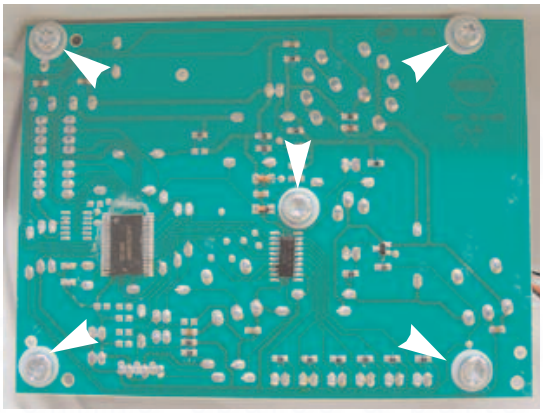

Fig. 18.13

18.3.3 Removing the fuses

1. Carry out step ***18.2.1*** ;
2. Open the electrical box as in step ***18.3.1*** *Fig.18. 6*
3. Remove the fuse box cover "**C**" *(see Fig. 18.14);*
4. Pull out the fuse *(see Fig. 18.15)*;
5. Reassemble in reverse order.

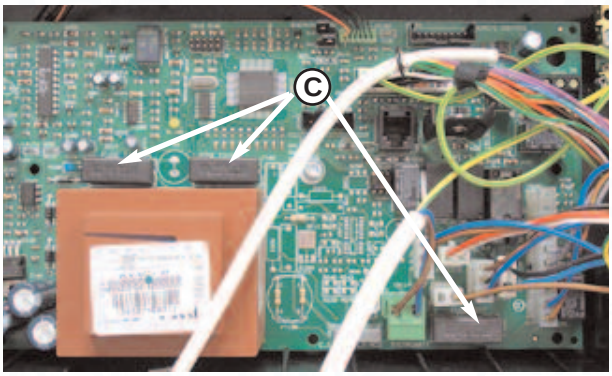

Fig. 18.14

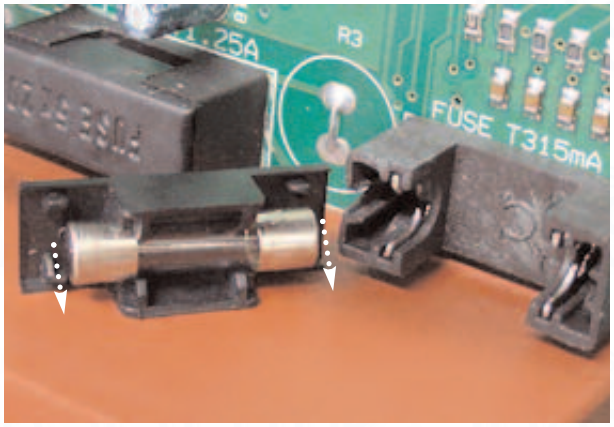

Fig. 18.15

18.3.4 Removing the time clock

1. Carry out step ***18.2.1*** ;
2. Open the electrical box as in step ***18.3.1*** *Fig. 18.6;*
3. Disconnect the programmer plug *(see Fig. 18.16);*
4. Push on the two clips to remove the programmer *(see Fig. 18.17);*
5. Reassemble in reverse order.

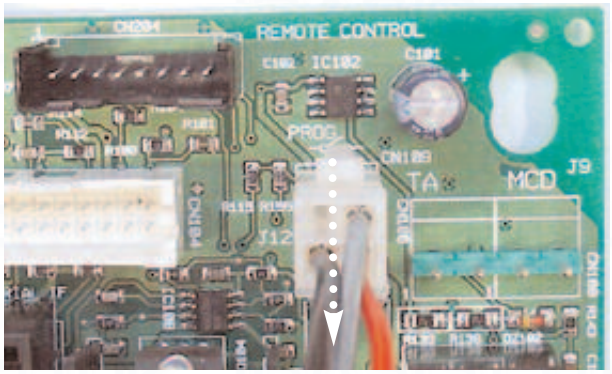

Fig. 18.16

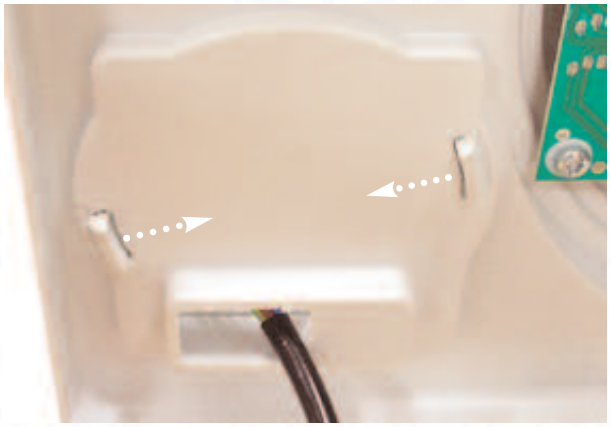

Fig. 18.17

18.4 Access to the Sealed Chamber

18.4.1 Removing the sealed chamber front panel

1. Carry out step ***18.2.1***;
2. Unscrew the six self tapping screws "**D**" to release the sealed chamber front panel and lift clear *(see Fig. 18.18);*
3. Reassemble in reverse order.

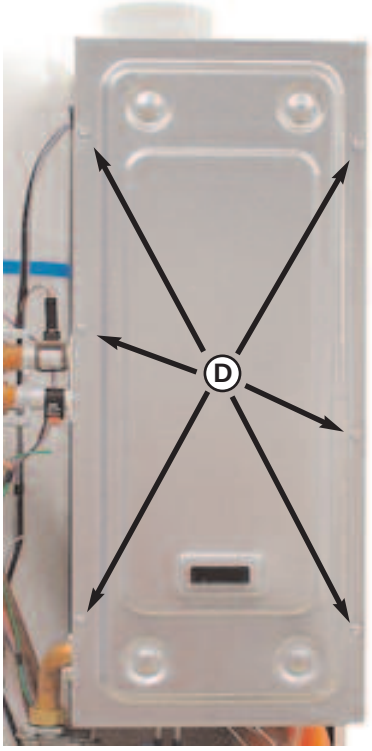

Fig. 18.18

18.4.2 Removing the combustion chamber front panel

1. Carry out steps ***18.2.1*** and ***18.4.1***;
2. Unscrew the four self tapping screws "**E**" to release the combustion chamber front panel and lift clear *(see Fig. 18.19);*
3. Reassemble in reverse order.

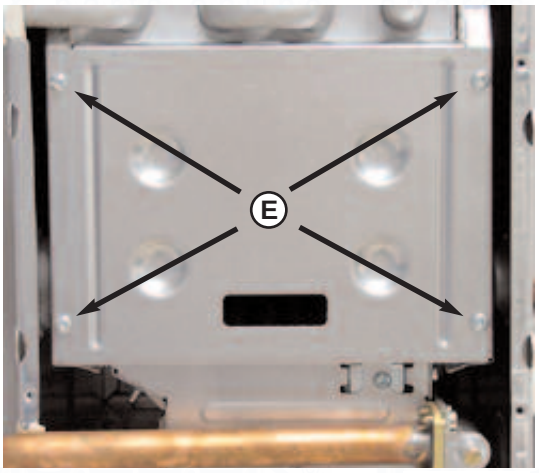

Fig. 18.19

18.4.3 Removing the burner

1. Carry out steps ***18.2.1***, ***18.4.1*** and ***18.4.2*** as above;
2. Disconnect the electrode wires *(see Fig. 18.20);*
3. Remove the two caps "**F**" from the bottom of the combustion chamber *(see Fig. 18.21, Fig 18.22);*
4. Remove the nut "**G**" between manifold and gas pipe *(see Fig. 18.23);*
5. Then, pull the burner toward you *(see Fig. 18.24)*;
6. Reassemble in reverse order and carry out combustion tests.

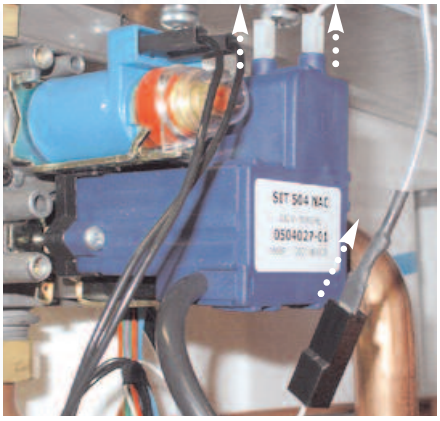

Fig. 18.20

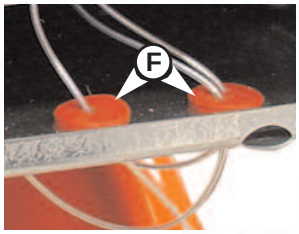

Fig. 18.21

Fig. 18.22

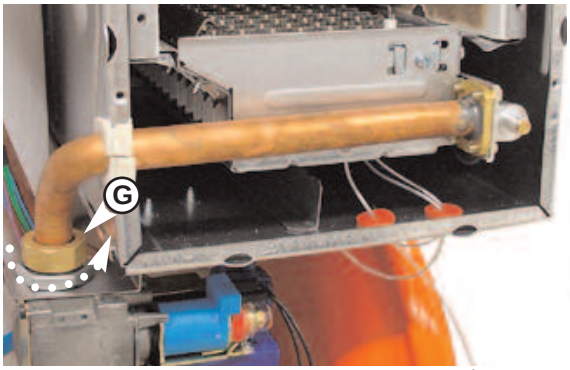

Fig. 18.23

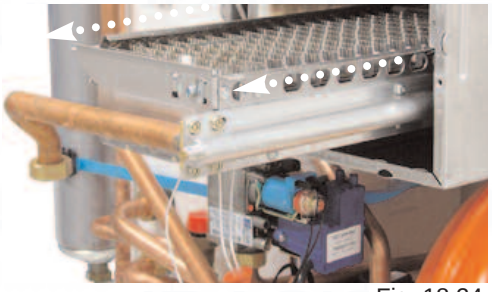

Fig. 18.24

18.4.4 Removing the electrodes

1. Carry out steps ***18.2.1***, ***18.4.1*** and ***18.4.2*** as above;
2. Disconnect the electrode wires *(see Fig. 18.20, Fig 18.21 & 18.22);*

3. **For the ionisation electrode :**
   Remove the screw "**H1**" *(see Fig. 18.25),* and pull it up *(see Fig. 18.26)*;

   For the ignition electrodes :
   It's necessary to disengage the burner in part as in step ***18.4.3***, and then remove the two self tapping screws "**H2**" *(see Fig. 18.25);*
   Pull up the electrodes *(see Fig. 18.27);*

4. Reassemble in reverse order.

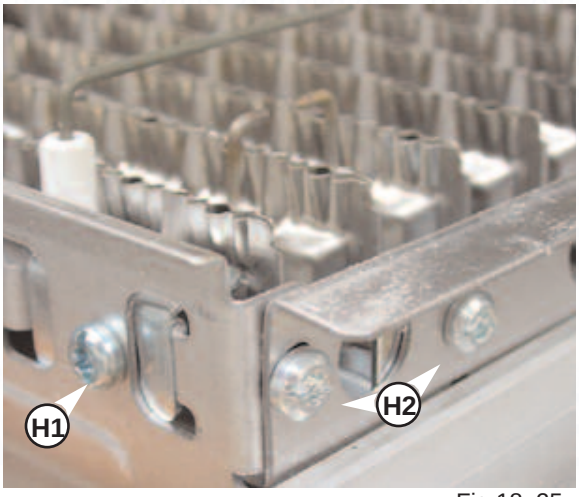

Fig.18. 25

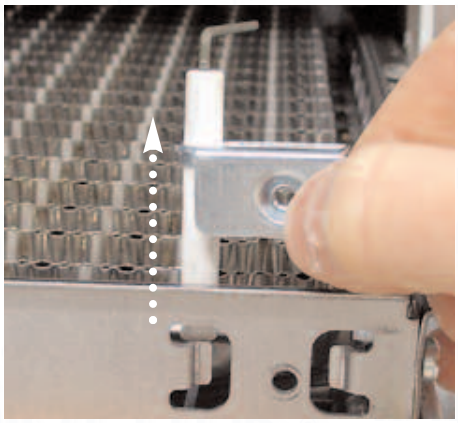
Fig.18. 26

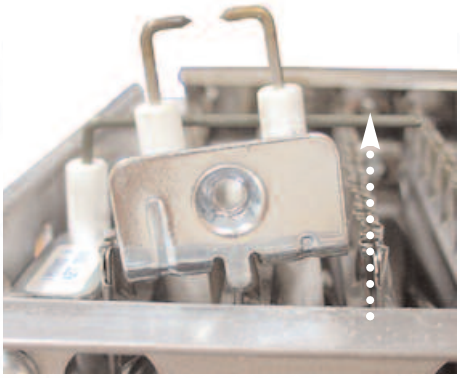
Fig.18. 27

18.4.5 Removing the burner manifold

1. Carry out steps ***18.2.1, 18.2.2, 18.4.1 and 18.4.2***;
2. Remove the burner as in step ***18.4.3***;
3. Remove the 3 screws " **I** " securing the manifold and lift clear *(see Fig. 18.28)*;
4. Reassemble in reverse order positioning the stop lug in the correct postion.*(see Fig. 18.29)*.

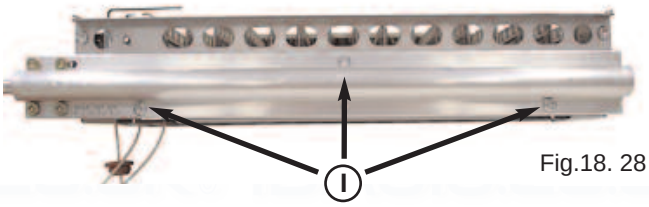

Fig.18. 28

Fig.18. 29

18.4.6 Removing the main heat exchanger

1. Carry out steps ***18.2.1***, and ***18.4.1*** as above;
2. Drain the boiler (only heating circuit) as in step ***18.6.1***;
3. Remove the NTC clips "**J1**" and overheat sensor clip "**J2**" *(see Fig. 18.30 and 18.31)*;
4. Remove the 2 clips "**J3**" securing the heat exchanger *(see Fig. 18.30 and 18.31)*;
5. Unscrew the nut "**J4**" from the tank *(see Fig. 18.30 and 18.31)*;
6. Pull the heat exchanger toward you to remove it *(see Fig. 18.32);*
7. Reassemble in reverse order, do not forget to grease o rings before reassembly.

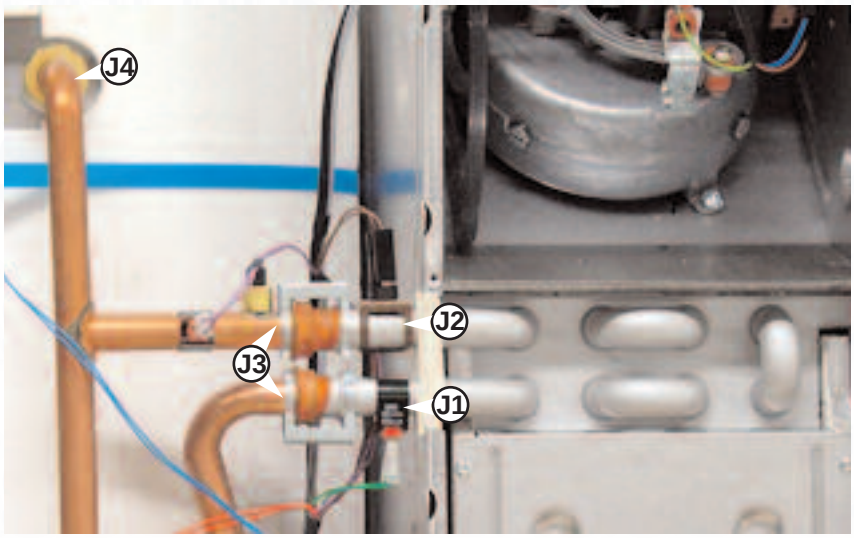

Fig. 18.30

Fig. 18.31

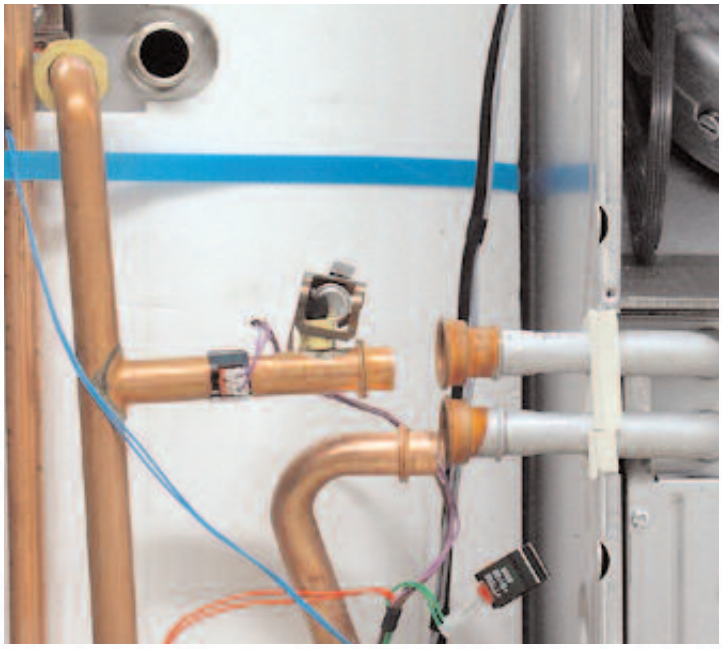

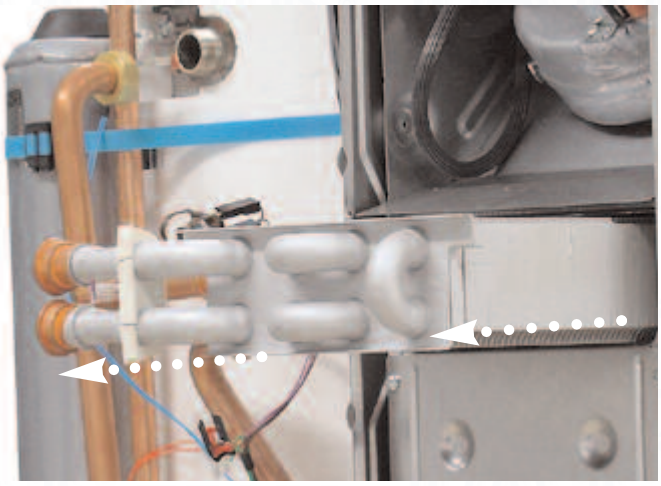

Fig. 18.32

18.4.7 Removing the air pressure switch

1. Carry out steps ***18.2.1*** and ***18.4.1***;
2. Disconnect the wire connectors "**K1**" *(see Fig. 18.33)*;
3. Disconnect the pressure pipes "**K2**" noting positions *(see Fig. 18.33)*;
4. Rotate the the pressure switch clockwise to disengage it *(see Fig. 18.34)*;
5 Reassemble in reverse order ensuring that the wiring is reconnected.

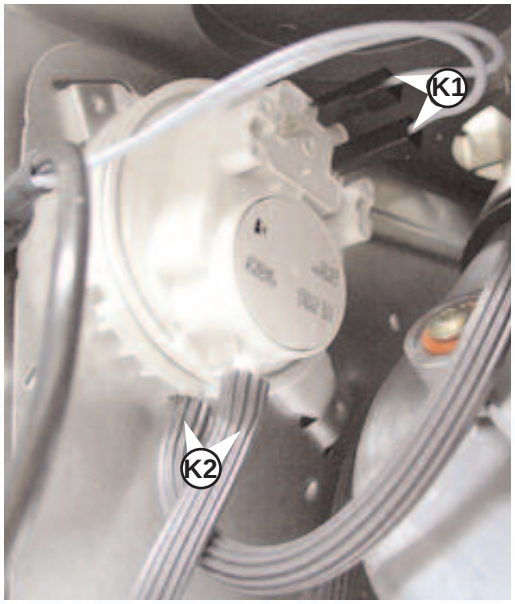

Fig. 18.33

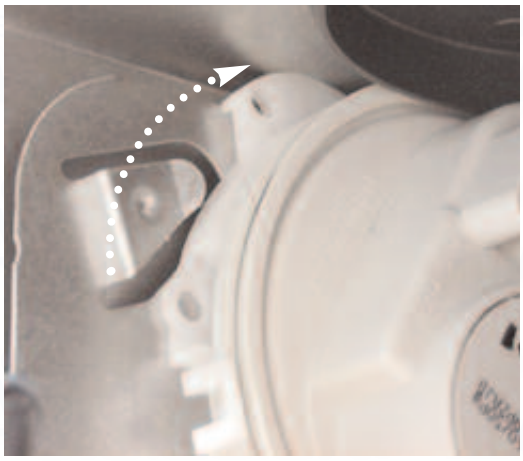
Fig. 18.34

18.4.8 Removing the fan

1. Carry out steps ***18.2.1*** and ***18.4.1***;
2. Disconnect the wire connectors "**L1**" and the earth wire "**L2**"
   (see Fig. 18.35);
3. Remove the screw "**M**" fixing the fan on the flue outlet, *(see Fig. 18.35)*;
4. Slide the fan to disengage from flue outlet and lift clear *(see Fig. 18.35, 18.36, 18.37)*;
5. Disconnect the pressure pipes noting positions *(see Fig. 18.38)*;
6. Reassemble in reverse order ensuring that the wiring is reconnected correctly and the screw tightened.

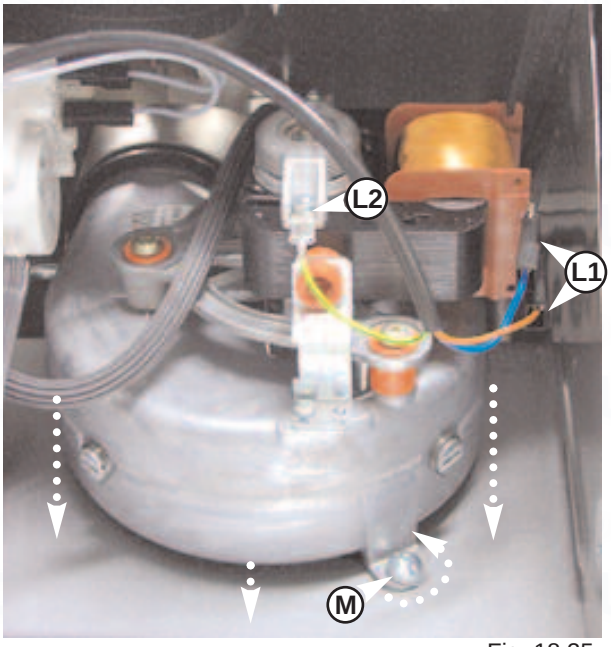

Fig. 18.35

Fig. 18.36

Fig. 18.37

Fig. 18.38

18.5 Access to the Gas Valve

18.5.1 Removing the spark generator

1. Carry out step ***18.2.1*** ;
2. Open the control box by pushing on the 2 right clips as in step ***18.3.1*** *Fig 18.6;*
3. Disconnect electrical connections "**N1**" on the P.C.B. *(see Fig. 18.42)* ;
4. Disconnect the electrodes wires "**N2**" and remove the screw "**N3**" *(see Fig. 18.43)* ;
5. Remove the spark generator by pulling it toward the right *(see Fig.18.43)*;
6. Reassemble in reverse order.

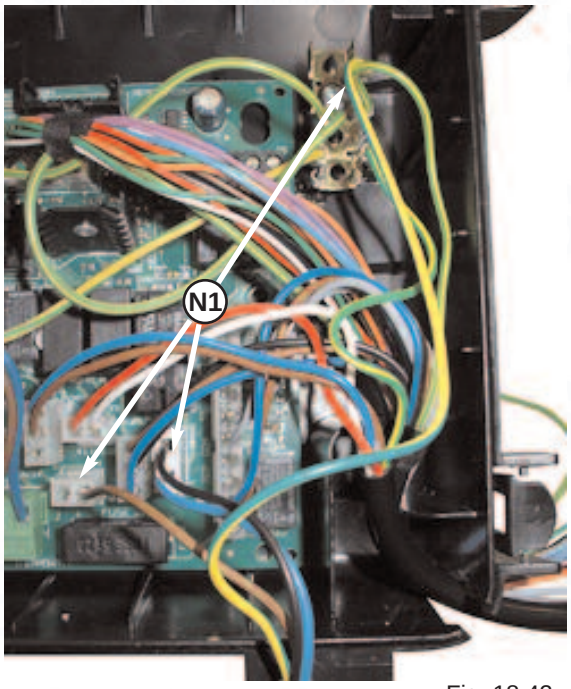

Fig. 18.42

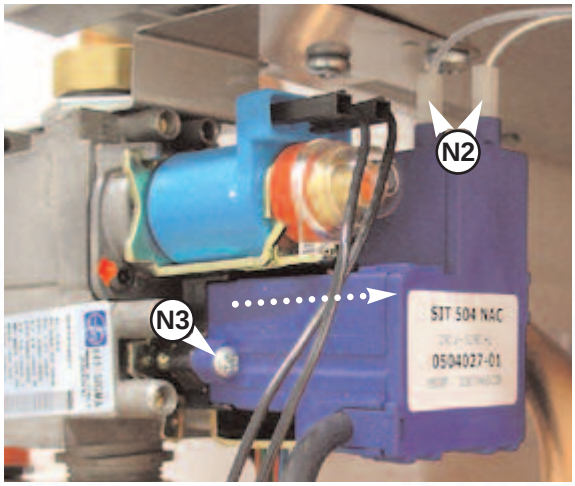

Fig. 18.43

18.5.2 Removing the gas valve

Important. ensure gas supply to boiler is turned off

1. Carry out step ***18.2.1*** ;
2. Remove the spark generator by only removing the screw "**N3**" and pull it toward the right as in *Fig.18.43*;
3. Disconnect the wires from the modulator coil "**O1**"*(see Fig. 18.44)* ;
4. Undo the 2 gas pipe nuts "**O2**" (spanner 30) and the nut "**O3**" securing the gas valve from the combustion chamber *(see Fig.18.45)*;
5. Pull the gas valve toward you *(see Fig.18.46);*
6. Reassemble in reverse order replacing the gaskets.

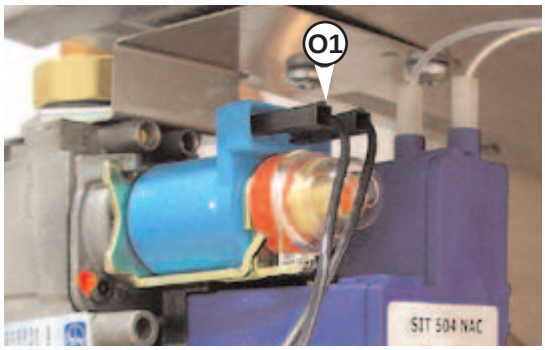

Fig. 18.44

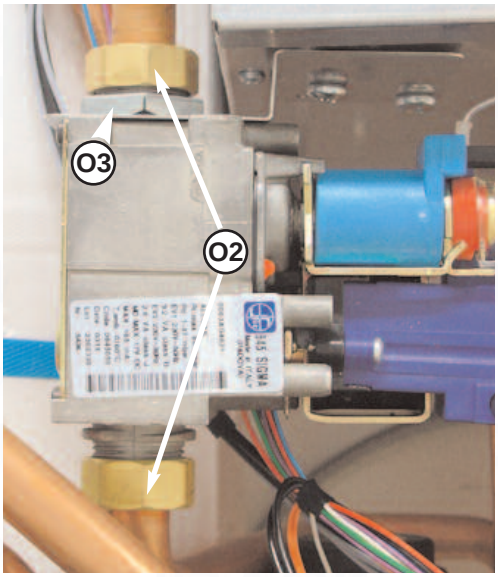

Fig. 18.45

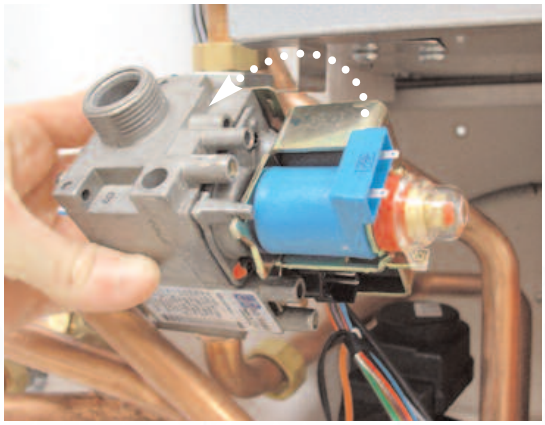

Fig. 18.46

18.6 Access to the Water Circuit

Important ! **Before any component is removed (except the 3 way valve motor), the boiler must be drained of all water.**

18.6.1 Drain down

For the primary circuit :

1. Carry out step ***18.2.1*** ;
2. Open the pressure relief valve (on the pump) *(see Fig. 18.47)* or the drain screw "**P1**" on the right hydraulic block *(see Fig.18.48)*;

For the D.H.W. circuit :

1. Close the water inlet tap;
2. Open a D.H.W. hot water tap;
3. Open the drain screw "**P2**" on the boiler *(see Fig. 18.48)* To drain the tank more quickly remove the cap on the tank *(see Fig. 18.49)*;

Important!! Take care when removing the cap to drain the cylinder

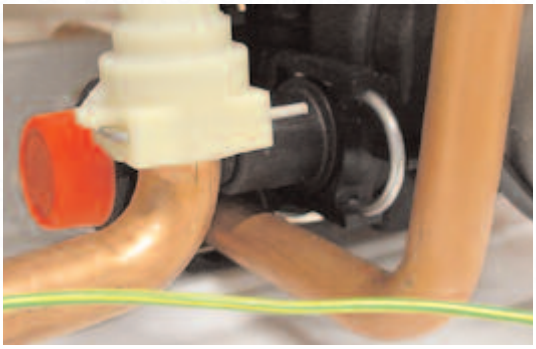

Fig. 18.47

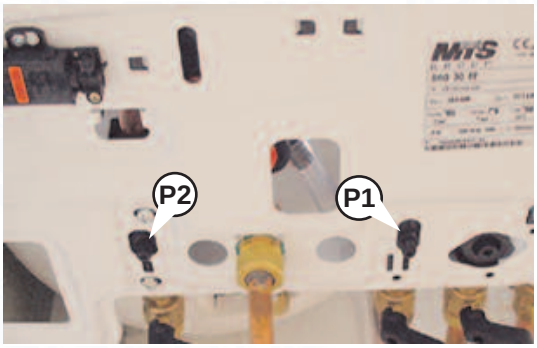

Fig. 18.48

Fig. 18.49

18.6.2 Removing the 3 way valve

1. Carry out steps ***18.2.1*** and ***18.2.2*** ;
2. Remove the clip "**Q1**" and the three way valve motor *(see Fig. 18.50)* ;
3. Remove the two screws "**Q2**" *(see Fig. 18.51)*;
4. Then pull up the three way valve shutter *(see Fig. 18.52);*
5. Reassemble in reverse order.

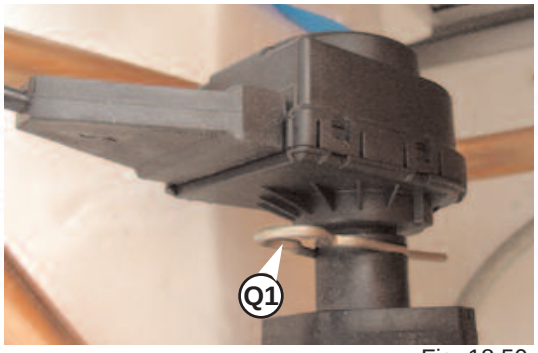

Fig. 18.50

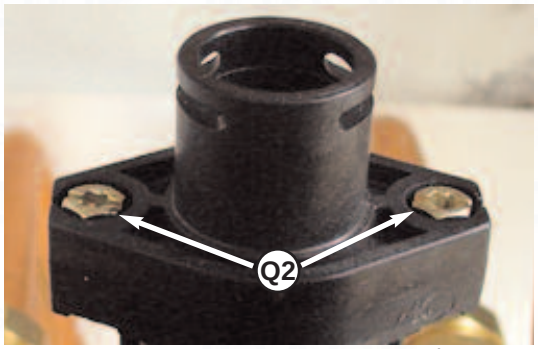

Fig. 18.51

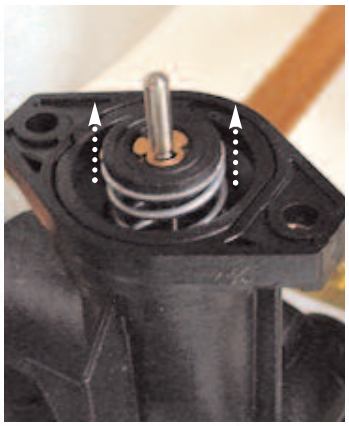

Fig. 18.52

Fig. 18.53

18.6.3 Removing the heating return filter

1. Unscrew 1/4 ball screw "**R**" *(see Fig. 18.58)*;
2. Pull it down *(see Fig. 18.59)*;
3. Reassemble in reverse order.

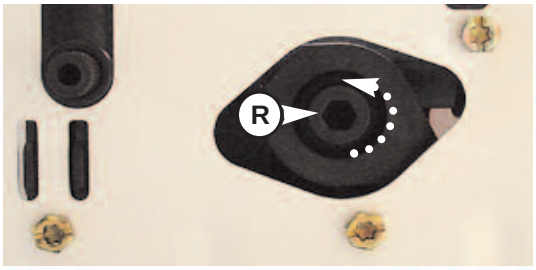

Fig. 18.58

Fig. 18.59

18.6.4 Removing the by-pass

1. Carry out steps ***18.2.1*** and ***18.2.2***;
2. Remove the heating filter as in step ***18.6.3*** ;
3. Remove the clip and pull out the By-pass *(see Fig. 18.60)*;
4. Reassemble in reverse order.

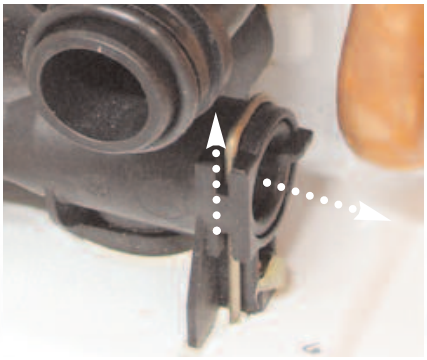

Fig. 18.60

Fig. 18.61

18.6.5 Removing the pressure relief valve (3 bar)

1. Carry out steps ***18.2.1*** and ***18.2.2***;
2. Remove the clip securing the valve and disconnect the safety valve outlet *(see Fig. 18.62)* and pull it toward the left;
3. Disconnect the flexible pipe *(see Fig. 18.63)*;
4. Reassemble in reverse order.

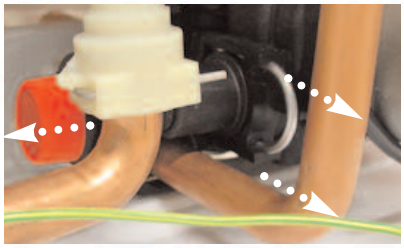

Fig. 18.62

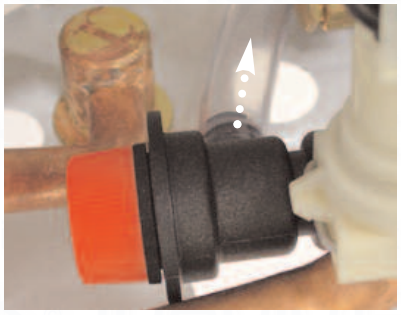

Fig. 18.63

18.6.6 Removing the pressure relief valve (6 bar)

1. Carry out steps ***18.2.1*** and ***18.2.2***;
2. Remove the clip securing the valve and unscrew the nut *(see Fg. 18.64)*;
3. Reassemble in reverse order.

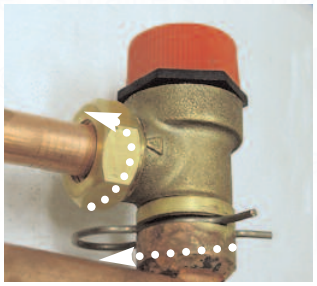

Fig. 18.64

18.6.7 Removing the temperature and pressure relief valve (7 bar)

1. Unscrew the nut and then unscrew the valve *(see Fig. 18.65)*;
2. Reassemble in reverse order.

Fig. 18.65

18.6.8 Removing the pump

1. Carry out step ***18.2.1***;
2. Open the electrical box cover as in step ***18.3.1*** *Fig. 18.6*
3. Remove the pump plug from the control board and earth plug from earth socket "**S**" *(see Fig. 18.66);*
4. Remove the pressure relief valve 3 bar as in step ***18.6.5***;
5. Unscrew the pump nut "**T1**" and remove the clip "**T2**" on the pump volute *(see Fig. 18.67 & Fig 18.68);*
6. Pull the pump toward you and remove the clip "**T3**" securing the pressure gauge *(see Fig. 18.69);*
7. Reassemble in reverse order.

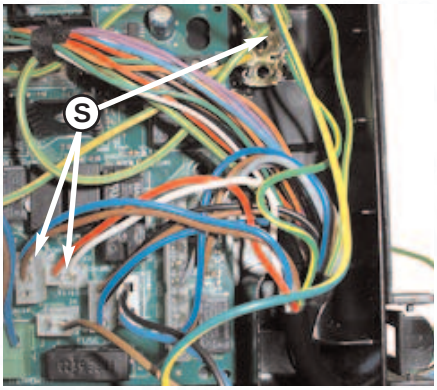

Fig. 18.66

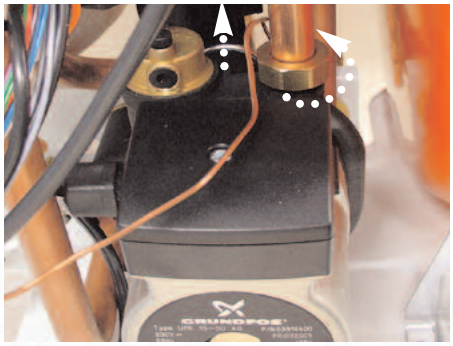
Fig. 18.67

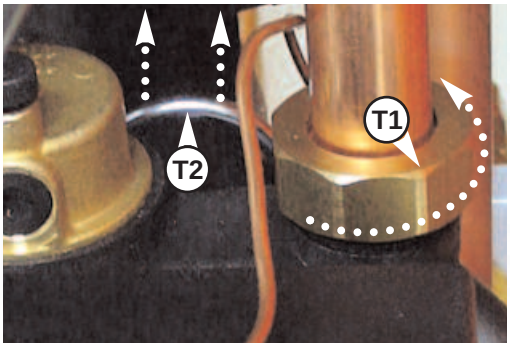

Fig. 18.68

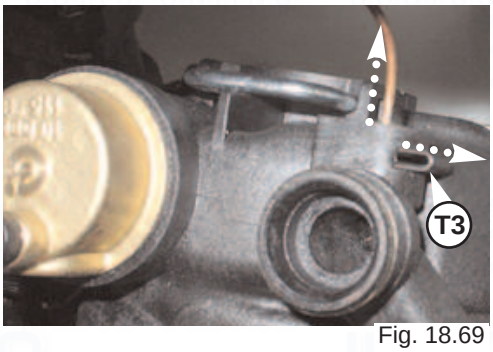

Fig. 18.69

18.6.9 Removing the expansion vessel

1. Carry out step ***18.2.1***;
2. Remove the screw "**U1**" *(see Fig. 18.70)*;
3. Pull the expansion vessel toward you and remove the nut "**U2**" with a No.17 spanner *(see Fig. 18.71)*;
4. To ensure the easiest access to the hydraulic parts, hang the expansion vessel on the chassis without removing the nut *(see Fig. 18.72)*;
5. Reassemble in reverse order.

Fig. 18.70

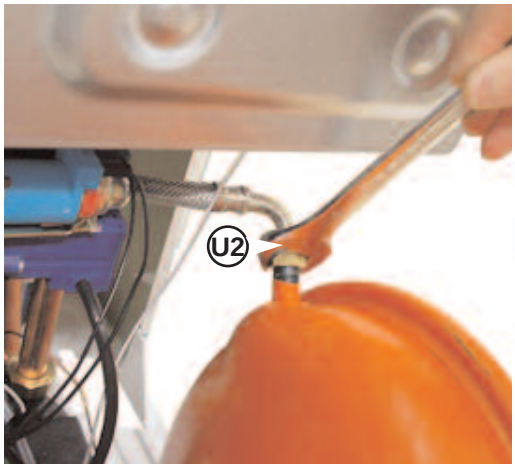

Fig. 18.71

Fig. 18.72

18.6.10. Removing the overheat thermostat

1. Remove the casing as in step **18.2.1** ;
2. Pull off the thermostat connections. Then remove the thermostat from the pipe by releasing it's securing clip *(see Fig. 18.73)*.

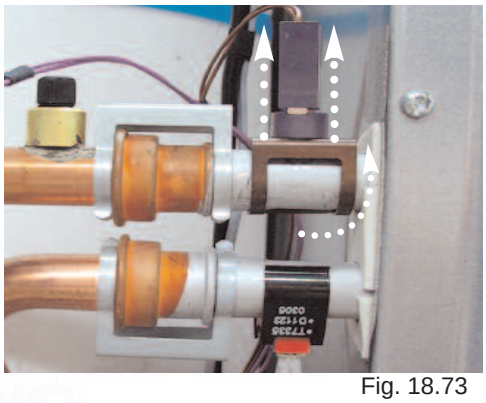

Fig. 18.73

18.6.11 Removing the heating temperature sensor

1. Remove the casing as in step **18.2.1** ;
2. Pull off the NTC connections. Then remove the NTC from the pipes by releasing clips *(see Fig. 18.74)*.

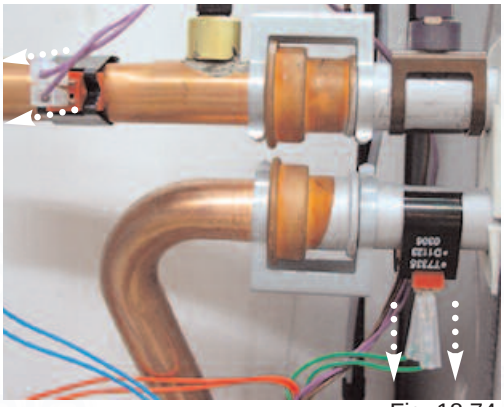

Fig. 18.74

18.6.12 Removing the tank temperature sensor

1. Remove the casing as in step **18.2.1** ;
2. Pull off the NTC connections. Then remove the NTC from the tank by removing the screws *(see Fig. 18.75)*.

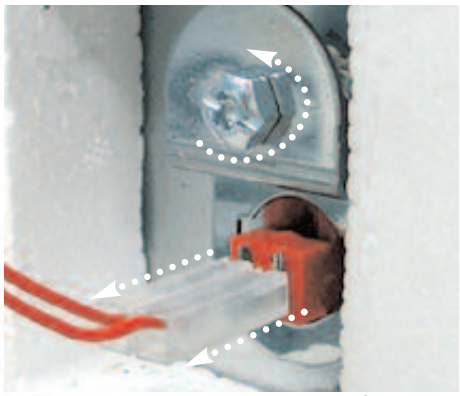

Fig.18.75

18.6.13 Removing the flow switch

1. Remove the casing as in step **18.2.1** ;
2. Remove electrical connection and the two clips fixing the flow switch *(see Fig. 18.76)*;
3. Pull down the lower pipe and remove the flow switch;
4. Reassemble in reverse order, the arrow must be positioned correctly *(see Fig. 18.77 and 18.78)*.
5. Reassemble in reverse order

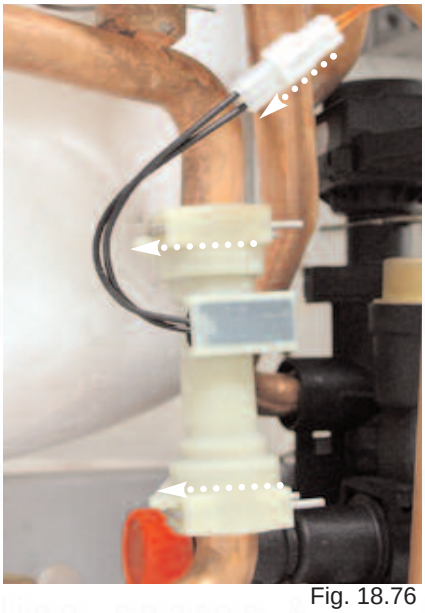

Fig. 18.76

Fig. 18.77

Fig. 18.78

18.6.14 Removing the D.H.W. expansion vessel

1. Remove the casing as in step ***18.2.1*** ;
2. Remove the clip *(see Fig. 18.79 & 18.80)*;
3. Pull up the first tie on the top of the expansion vessel *(see Fig. 18.81)* ;
4. Pull up the expansion vessel to disengage it from the second tie;
5. Reassemble in reverse order.

Fig. 18.79

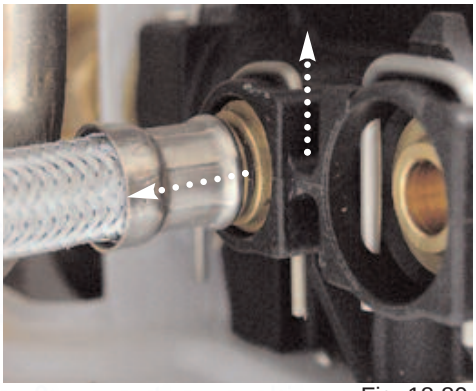

Fig. 18.80

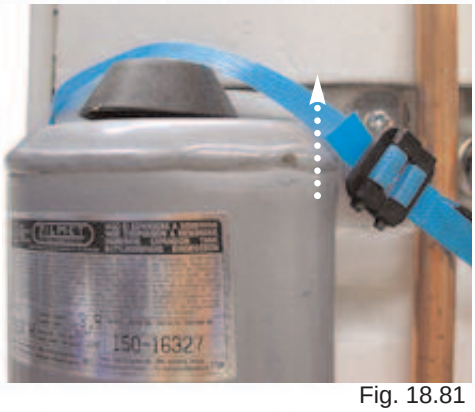

Fig. 18.81

18.6.15 Removing the flow limiter

1. Carry out steps **18.2.1** and **18.2.2**;
2. Remove the two clips and remove the pipe *(see Fig. 18.82)*;
3. Remove the two screws *(see Fig. 18.83)* and pull the block toward you;
4. Remove the limiter from the block *(see Fig.18.84)*;
5. Reassemble in reverse order.

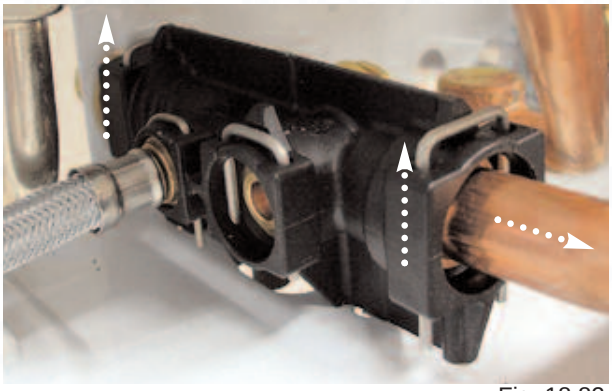

Fig. 18.82

Fig. 18.83

Fig. 18.84

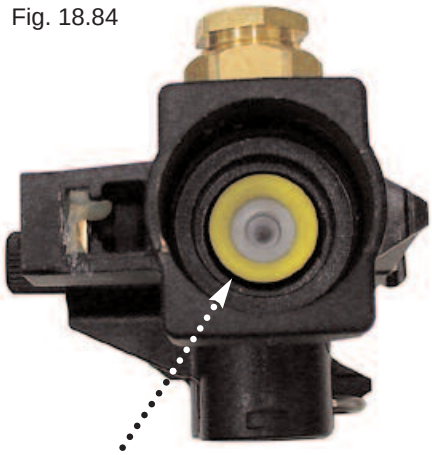

Fig. 18.85

18.6.16 Removing the tank

1. Remove the casing as in steps ***18.2.1*** *and* ***18.2.2***;
2. Remove all clips, nuts (No. 30 spanner) and eletrical connections (NTC) from the tank *(see Fig. 18.86 & 18.87)*;
3. Remove the clip on the bottom of the boiler to disengage the pipe between the chassis and the thermal valve *(see Fig. 18.88)*;
4. Disconnect the D.H.W expansion vessel from the left hydraulic block *(see Fig. 18.80)*;
5. Remove the two screws **V** on the left side panel *(see Fig. 18.89)*;
6. Remove the nut (No. 10 spanner) on the top of the tank *(see Fig. 18.90)*;
7. Pull up the tank to disengage it, and then toward you to remove it.
8. Reassemble in reverse order

Fig.18. 86

Fig. 18.87

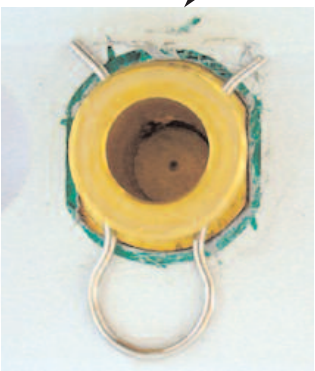

Fig. 18.88

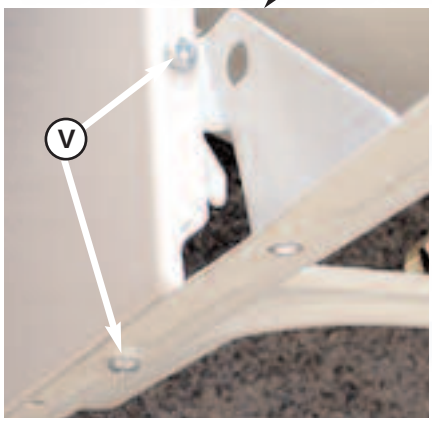

Fig. 18.89

Fig. 18.90

19. FAULT FINDING GUIDE (Flow-chart)

It is possible to detect and correct defects by using the standard fault finding diagrams described in this chapter.

NOTE: THESE CHECKS ARE NOT EXHAUSTIVE.

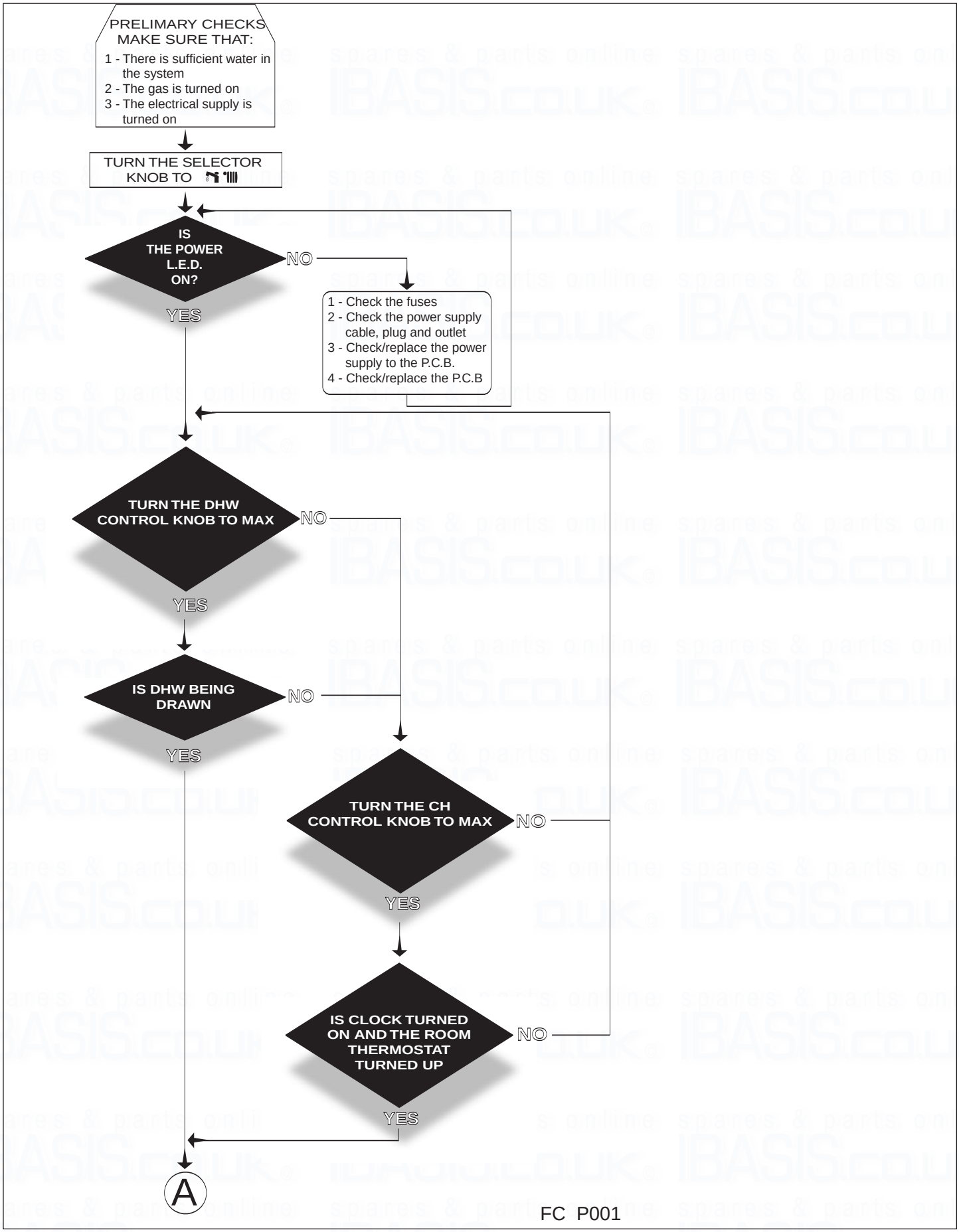

FC P001

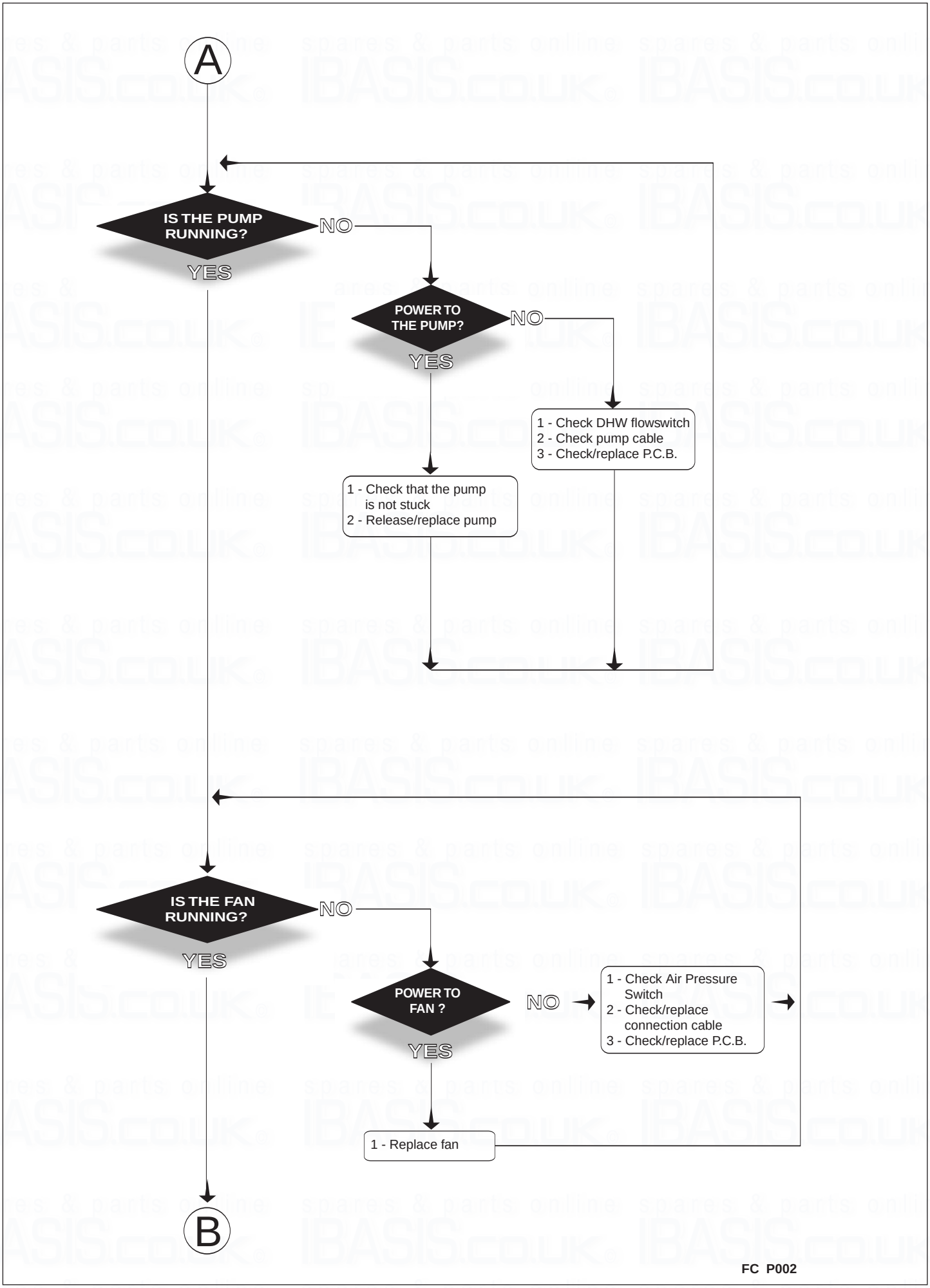
A
IS THE PUMP RUNNING?
NO
YES
POWER TO THE PUMP?
NO
YES
1 - Check DHW flowswitch
2 - Check pump cable
3 - Check/replace P.C.B.
1 - Check that the pump is not stuck
2 - Release/replace pump
IS THE FAN RUNNING?
NO
YES
POWER TO FAN ?
NO
YES
1 - Check Air Pressure Switch
2 - Check/replace connection cable
3 - Check/replace P.C.B.
1 - Replace fan
B
FC P002

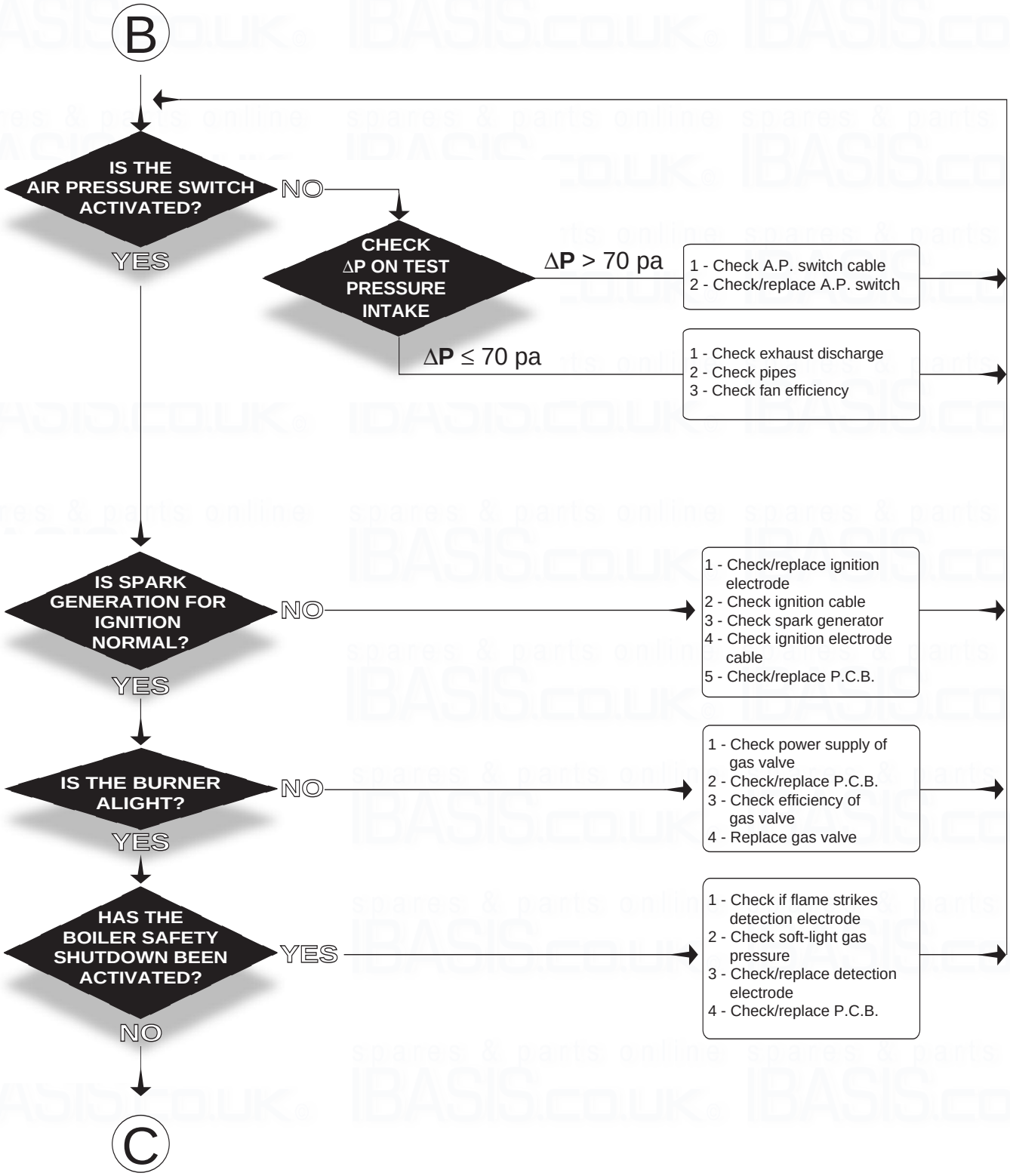
B
IS THE AIR PRESSURE SWITCH ACTIVATED?
NO
YES
CHECK ΔP ON TEST PRESSURE INTAKE
ΔP > 70 pa
1 - Check A.P. switch cable
2 - Check/replace A.P. switch
ΔP ≤ 70 pa
1 - Check exhaust discharge
2 - Check pipes
3 - Check fan efficiency
IS SPARK GENERATION FOR IGNITION NORMAL?
NO
1 - Check/replace ignition electrode
2 - Check ignition cable
3 - Check spark generator
4 - Check ignition electrode cable
5 - Check/replace P.C.B.
YES
IS THE BURNER ALIGHT?
NO
1 - Check power supply of gas valve
2 - Check/replace P.C.B.
3 - Check efficiency of gas valve
4 - Replace gas valve
YES
HAS THE BOILER SAFETY SHUTDOWN BEEN ACTIVATED?
YES
1 - Check if flame strikes detection electrode
2 - Check soft-light gas pressure
3 - Check/replace detection electrode
4 - Check/replace P.C.B.
NO
C

FC P005

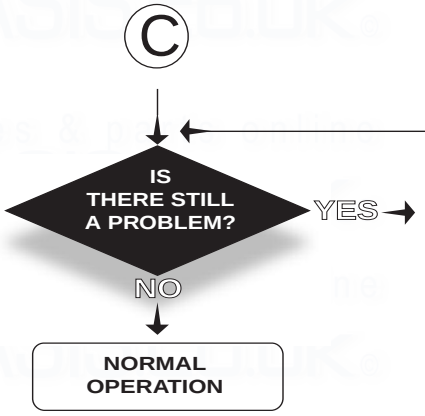

	FAULTS	POSSIBILE CAUSES
1	Drawing D.H.W: When you turn on a tap burner switches off	- check temperature probes - faulty D.H.W. flow switch
2	Drawing D.H.W: radiators heat up in summer mode	- faulty 3-way valve
3	Drawing D.H.W: insufficient hot water temperature	- check temperature probes - check gas pressures - check water flow rate
4	Drawing D.H.W: noisy operation	- primary heat exchanger faulty or lime-scale deposits - low heating system water pressure - check gas pressures - check temperature probes
5	Decrease/increase heating circuit pressure	- check for leaks on the heating circuit - faulty filling-loop - expansion vessel faulty
6	Repeated shutdowns	- faulty detection electrodes - check gas settings - check flame detection electric circuit
7	Repeated intervention of safety thermostat	- check temperature probes - overheat thermostat not calibrated correctly - air in primary water circuit
8	When cold water tap turned off, the boiler ignites	- drop in pressure in the water mains, with consequent water hammer
9	Insufficient radiator temperature	- check C.H. temperature probe - check by-pass - check gas pressures

FC P006

20. Short Spares List

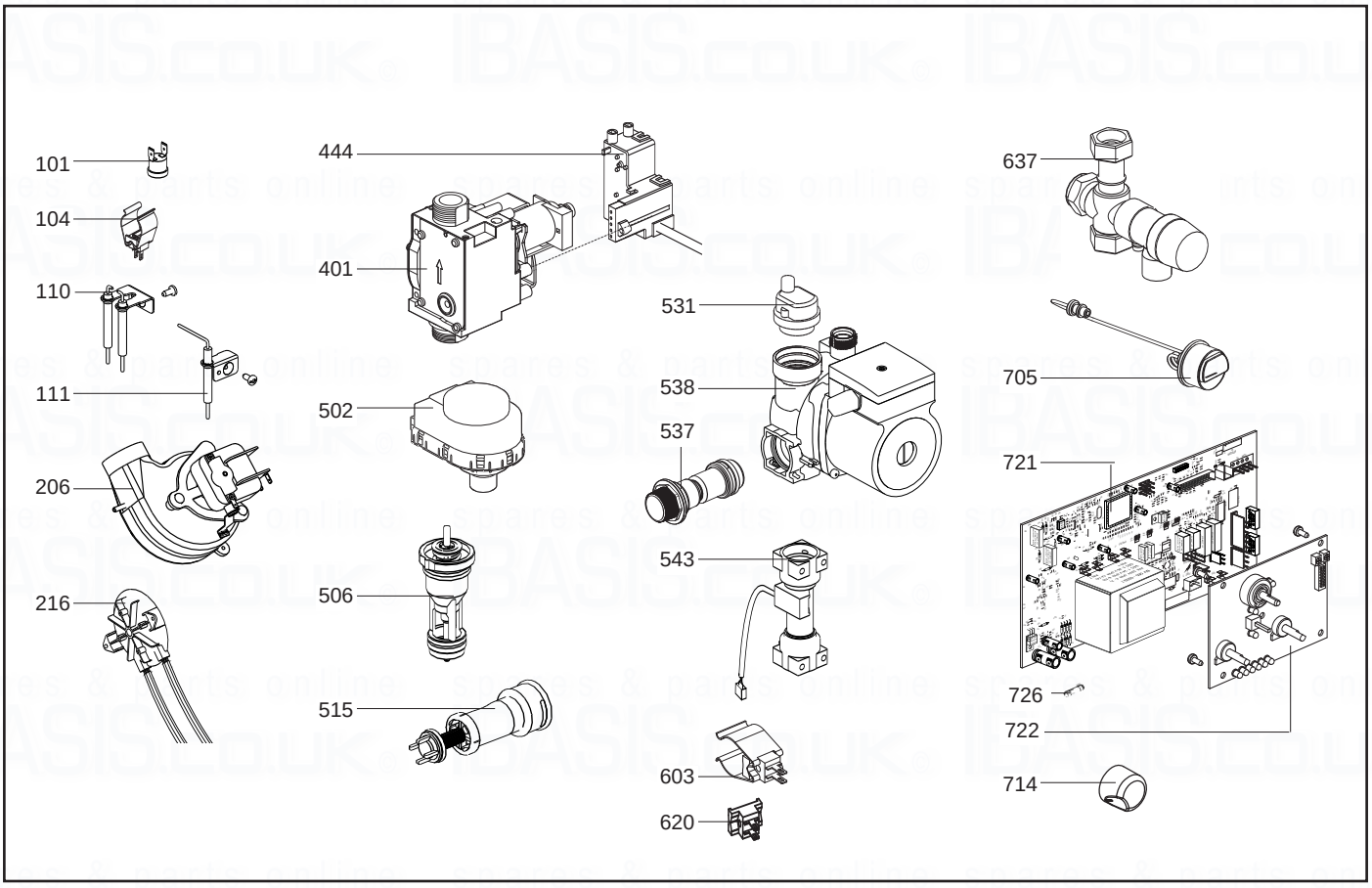

Key N°	Description	G.C N°	Manf. Pt. N°	Type	GENUS 30 BFFI	Manf. date from	Manf. date to
101	OVERHEAT THERMOSTAT 100°C	277783	61010572		■		
104	THERMISTOR		990686		■		
110	IGNITION ELECTRODE		61305840		■		
111	DETECTION ELECTRODE		61303302		■		
206	FAN		61307665		■		
216	AIR PRESSURE SWITCH (30kW)		61307665		■		
401	GAS VALVE (NAT)		61314591	NAT	■		
444	SPARK GENERATOR		61311269		■		
502	MOTOR (3-WAY VALVE)		61302483		■		
506	BODY (3-WAY VALVE)		61303330		■		
515	BY-PASS		61305111		■		
531	AUTO AIR VENT		61304608		■		
537	SAFETY VALVE (3 BAR)		61305113		■		
538	PUMP & AUTO AIR VENT (15/50)		61301964		■		
	PUMP & AUTO AIR VENT (15/60)		61303461		■		
543	D.H.W. FLOW SWITCH		61304982		■		
603	THERMISTOR		990686		■		
620	THERMISTOR		61312187		■		
637	SAFETY VALVE (7 BAR)		61314112		■		
705	PRESSURE GAUGE		61305005		■		
714	CONTROL KNOB		992027		■		
721	MAIN P.C.B.		61314513		■		
722	CONTROL P.C.B.		992024		■		
726	FUSE (250V 2A)	277883	61003456		■		
	FUSE (250V 1.25A)	277884	61003635		■		
	FUSE (250V 0.315A)		61307845		■		

03/04

spares & parts online
IBASIS.CO.UK

spares & parts online
IBASIS.CO.UK

21. Technical Information

		GENUS 30 PLUS
CE Certification		1312BN3612
Thermal Capacity	max/min kW	29.8/12.0
Thermal Power	max/min kW	30/7.8
Efficiency of Nominal Thermal Capacity	%	90.7
Efficiency at 30% of Nominal Thermal Capacity	%	84.4
Residual Discharge Head	mbar	1.3
Consumption at Nominal Capacity (G20-G25)	m^3/h	3.16
(15°C, 1013 mbar) (G30-G31)	Kg/h	2.35/2.32
Temp. of Exhaust Fumes at Nominal Capacity with Methane	°C	150
CO_2 Content	%	6.1
Nox	mg/kWh	168
CO Content	ppm	90
Minimum Ambient Temperature	°C	+5
Heating Temperature (approx)	max/min °C	82/42
Temperature & Pressure Relief Valve Setting	bar/°C	7/90
Stored D.H.W. Cylinder Capacity	l	50
Stored D.H.W. min/max Temperature (approx)	max/min °C	40/70
Specific flow rate* (IN 10' ΔT=30°C)	l/min	18
Time Taken to Raise Tempertature from 15°C to 65°C**	min	12
Time Taken to Raise 70% of the Stored Volume to 65°C**	min	8
D.H.W. Expansion Vessel Capacity	l	3.5
D.H.W. Expansion Vessel Pre-load Charge	bar	3.5
D.H.W. Operating Pressure	bar	3.5
Maximum Supply Pressure to Pressure Reducing Valve	bar	16
Heating Expansion Vessel Capacity	l	7
Heating Expansion Vessel Pre-load Charge	bar	1
Maximum Water Content in System	l	145
Maximum Heating Pressure	bar	3
Nominal Pressure Natural Gas (G20)	mbar	20
LPG (G30-G31)	mbar	30-37
Electrical Supply	V/Hz	220-240 / 50
Power Consumption	W	150
Protection Grade of Electrical System	IP	44
Internal Fuse Rating		FAST 2 AT
Weight (empty)	Kg	59
Maximum Flue Length (horizontal and vertical)	Coaxial Flue	3 metres
	Twin Flue (type 4)	34 metres
	Twin Flue (type 5)	56 metres
Dimensions (mm - height / width / depth)		950 x 595 x 470
Noise Level max/min power	dba	47.1 / 43.9
SEDBUK	Band	D
GC Number		**47-116-28**

*BS EN 625 **Figures obtained by WRc in accordance with Test Criteria 1-50-220 & 1-50-222

Manufacturer: **Chaffoteaux & Maury - France**

Commercial subsidiaries:

MTS (GB) Limited
MTS Building
Hughenden Avenue
High Wycombe
Bucks HP13 5FT

Telephone: (01494) 755600

Fax: (01494) 459775

Internet: www.mtsgroup.com/uk

E-mail: info@uk.mtsgroup.com

Technical Advice: 0870 241 8180

Customer Service: 0870 600 9888

MTS Heating Limited
Damastown Industrial Park
Damastown Avenue
Mulhuddart
Dublin 15

Telephone: (01) 810 3723

Fax: (01) 810 3727

Internet: www.mtsgroup.com/ie

E-mail: info@ie.mtsgroup.com

Technical Advice: (01) 437 0121

Customer Service: (01) 437 0121

1312485 - 04/2004