GENUS HE 35 Plus

GENUS HE 35 Plus BFFi

Installation and Servicing Instructions Type C Boilers

G.C.N: 47-116-57 (35 kW)

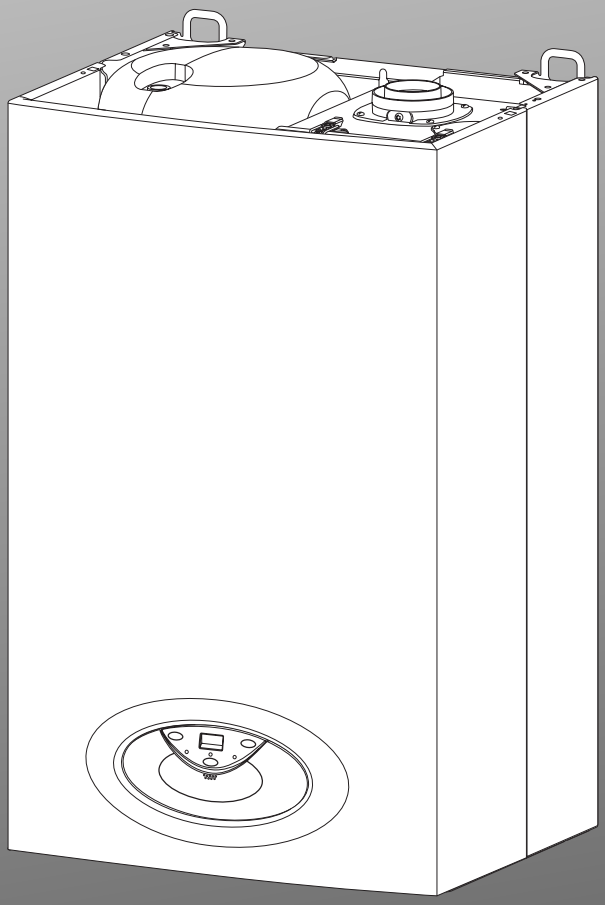

LEAVE THESE INSTRUCTIONS WITH THE END-USER

benchmark™ COLLECTIVE MARK

The code of practice for the installation, commissioning & servicing of central heating systems

ARISTON

Country of destination **GB** **IE**

CE

TABLE OF CONTENTS

1. General Information

2. Control Panel

3. How to Use

4. Anti-Frost Device

5. Maintenance

6. Trouble Shooting

7. Filling Instructions

8. Time Clock
8.1 Setting the Mechanical Clock
8.2 Setting the Digital Clock

9. General Information for the Installer
9.1 Overall View

10. Installation
10.1 Delivery
10.2 Reference Standards
10.3 Siting the Appliance
10.4 Clearances
10.5 Overall View
10.6 Mounting the Appliance
10.7 Electrical Connection
10.8 Gas Connection
10.9 Water Connections

11. Connecting the Flue

11.1 Fitting the Coaxial Flue (Ø 60/100 mm - Horizontal)
11.2 Fitting the Coaxial Flue (Ø 60/100 mm - Vertical)
11.3 Fitting the 5” Flue (Ø 80/125 mm - Vertical)
11.4 Fitting the Twin Pipe (Ø 80/80 mm)

12. Electrical Connections

13. Electrical System Diagrams

14. Water Circuit Diagrams

15. Commissioning
15.1 Initial Preparation
15.2 Completion
15.3 Removal and Fitting of the Case - Servicing
15.4 Pressurisation
15.5 Commissioning
15.6 Settings
15.7 Operating Faults

16. Gas Convertion

17. Maintenance

18. Servicing Instructions
18.1 Replacement of Parts

18.2 To Gain General Access
18.2.1 Removing the front panel
18.2.2 Removing the control panel

18.3 Access to the Control System
18.3.1 Removing the main PCB
18.3.2 Removing the display PCB
18.3.3 Removing the fuses
18.3.4 Removing the time clock

18.4 Access to the Combustion Chamber
18.4.1 Removing the combustion chamber front panel
18.4.2 Removing the air gas assembly
18.4.3 Removing the burner
18.4.4 Removing the detection electrode
18.4.5 Removing the ignition electrode
18.4.6 Removing the fan
18.4.7 Removing the gas valve
18.4.8 Removing the heat exchanger
18.4.9 Removing the spark generator

18.5 Access to the Water Circuit
18.5.1 Drain down
18.5.2 Removing the 3 way valve

18.5.3 Removing the heating return filter
18.5.4 Removing the by-pass
18.5.5 Removing the pressure relief valve (3 bar)
18.5.6 Removing the pressure relief valve (7 bar)
18.5.7 Removing the temperature & pressure relief valve (7 bar)
18.5.8 Removing & cleaning the condensate trap
18.5.9 Removing the pressure gauge
18.5.10 Removing the pump
18.5.11 Removing the heating expansion vessel
18.5.12 Removing the DHW expansion vessel
18.5.13 Removing the overheat thermostat
18.5.14 Removing the temperature sensors (N.T.C’s)
18.5.15 Removing the tank temperature sensor
18.5.16 Removing the water pressure gauge
18.5.17 Removing the flow switch
18.5.18 Removing the DHW temperature sensor
18.5.19 Removing the non return valve
18.5.20 Removing the plate heat exchanger
18.5.21 Removing the tank

19. Fault Finding Guide

20. Short Spares List

21. Technical Information

1. GENERAL INFORMATION

These instructions are suitable for the GENUS HE 35 Plus boilers :

Do not forget the Log Book!

MTS supports Benchmark, the heating industry code to ensure the correct installation, commissioning and servicing of domestic central heating systems.

To The Householder

Make sure you have a completed Log Book for your boiler. This provides a record of the commissioning of your boiler.

It contains important information about your particular installation that may be required by service engineers. The Log Book will also provide contact details for the installer should you need guidance in the use of this appliance or if there are any problems.

As with your car, your boiler will work more reliably and efficiently if regularly serviced. We recommend an annual service check. The service history of the appliance will be recorded on the Log Book.

In the unlikely event of any problems with your boiler or system you should first contact your installer. If your installer cannot resolve the problem he should telephone our national service helpline.

A charge may be made if MTS Service is called out to resolve a non-product related fault.

Your statutory rights are not affected.

To The Installer

As part of the commissioning of this appliance it is vital that the Log Book is completed and given to the Householder. Please ensure that your customer is aware of the importance of keeping the Log Book safe as a record of the installation and the appliance service history.

Please ensure that your customer is aware of the correct operation of the system, boiler and controls.

MTS recommend the use of protective clothing, when installing and working on the appliance i.e. gloves.

CUSTOMER CARE

MTS, as a leading manufacturer of domestic and commercial water heating appliances is committed to providing high quality products and a high quality after sales service.

Advice on installation or servicing can also be obtained by contacting the MTS Technical and Customer Service Departments at High Wycombe.

TECHNICAL DEPARTMENT		CUSTOMER SERVICE DEPARTMENT	
Tel:	0870 241 8180	Tel:	0870 600 9888
Fax:	01494 459775	Fax:	01494 459775

GUARANTEE

The manufacturer's guarantee is for 2 years from the date of purchase. The guarantee is invalidated if the appliance is not installed in accordance with the recommendations made herein or in a manner not approved by the manufacturer. To assist us in providing you with an efficient after sales service, please return the guarantee registration card enclosed with the boiler without delay.

CAUTION

In the United Kingdom, installation, start-up, adjustments and maintenance, must be performed by a competent person only, in accordance with the current Gas Safety (Installation & Use) Regulations and the instructions provided.

In the Republic of Ireland, the installation and initial start up of the appliance must be carried out by a Competent Person in accordance with the current edition of I.S.813 "Domestic Gas Installations", the current Buidling Regulations, reference should also be made to the current ETCI rules for electrical installation.

All CORGI registered installers carry a CORGI ID card, and have a registration number. Both should be recorded in your boiler Log Book. You can check your installer is CORGI registered by calling CORGI direct on:- (01256) 372300.

Improper installation may cause damage or injury to individuals, animals and personal property for which the manufacturer will not be held liable. To ensure efficient and safe operation it is recommended that the boiler is serviced annually by a competent person.

If it is known that a fault exists on the appliance, it must not be used until the fault has been corrected by a competent person.

This instruction booklet is especially designed for appliances installed in the UK and the Republic of Ireland

2. CONTROL PANEL

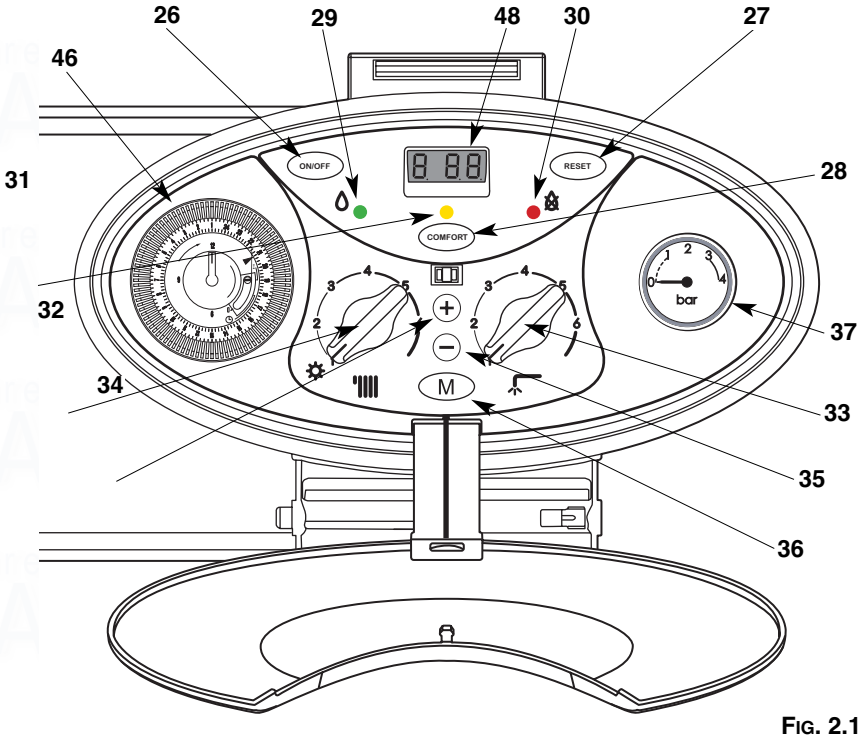

FIG. 2.1

Control panel (Fig. 2.1)

26. - **On/off** push button
27. - **Reset** push button
28. - domestic hot water function and **COMFORT** tank on/off button
29. - burner operation green indicator light
30. - red indicator lock-out light
31. - yellow indicator - **Comfort** button
32. - Central Heating control knob stop/mini/maxi
33. - DHW control knob /mini/maxi
34. - Increasing button **+**
35. - Reducing button **-**
36. - Menu button
37. - Pressure gauge
46. - Time clock
48. - Display

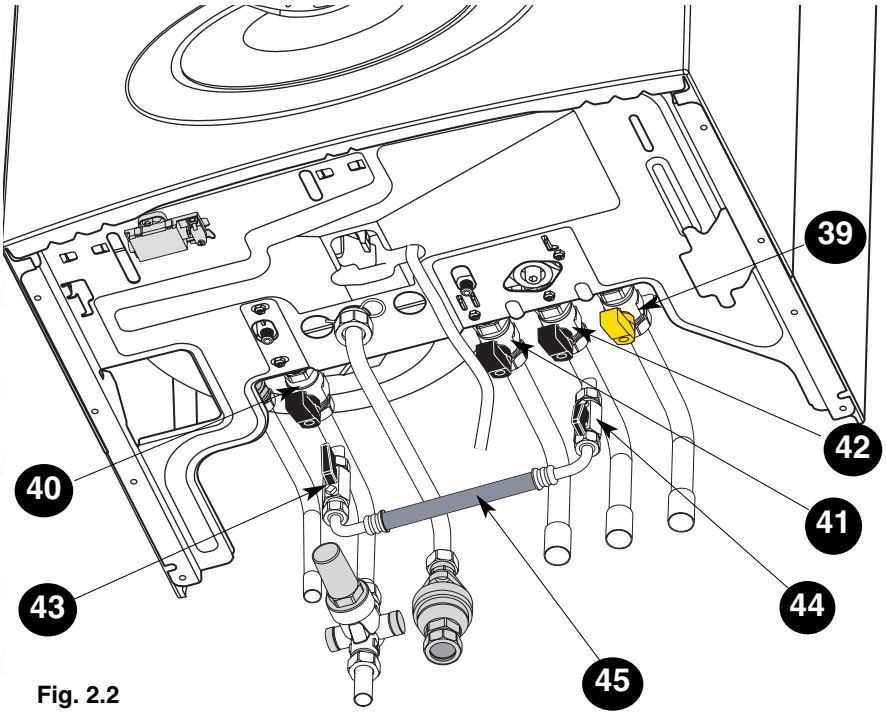

Fig. 2.2

Connecting bracket

Taps shown in Open position (Fig. 2.2)

39 : Gas service tap
40 : Water service tap
41 : Central heating flow isolating valve
42 : Central heating return isolating valve
43 & 44: Filling taps
45 : Filling loop

** Warning the flue analysis mode must only be selected by a qualified service engineer.*

3. HOW TO USE

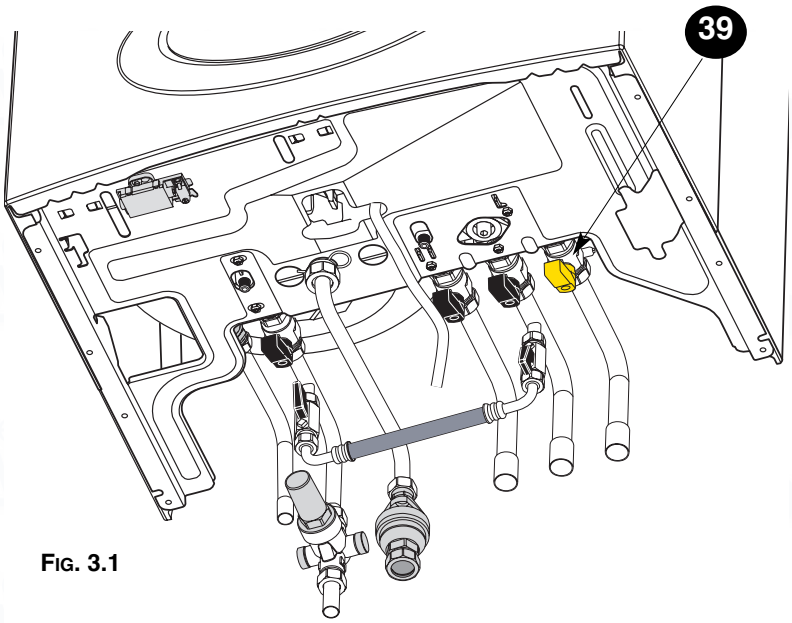

FIG. 3.1

Switching on

1. Check that the pressure in heating system is adequate, i.e. the pressure gauge **37** shows 1 bar minimum and 1.5 bar maximum.
2. Check that the gas service tap **39 (Fig. 3.1)** is opened **(Figs. 3.2 and 3.3)** and that the mains power is on, **On/Off** push button **26** Power ON.
   The boiler is now ready to use.

Note : If the boiler has been turned off for some time, the presence of air in the gas pipe may result in a lockout.

FIG. 3.2

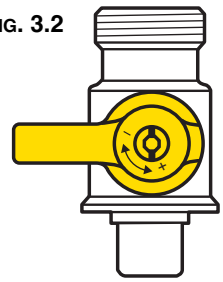

GAS COCK CLOSED

FIG. 3.3

GAS COCK OPEN

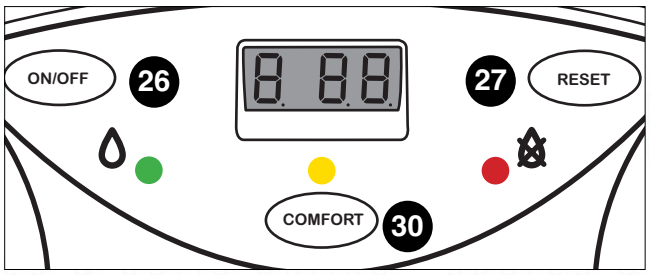

Ignition procedure

Press the button ON/OFF **26**, the electronic control unit will ignite the burner without any manual intervention (only when there is a demand for Domestic hot water or heating). If the burner does not ignite within the safety period, the screen will display error code A01 and the warning light **30** will come on.

To reinitialise the ignition system, press the button RESET **27**.
If ignition fails again, verify that the gas tap is open before calling a qualified technician.

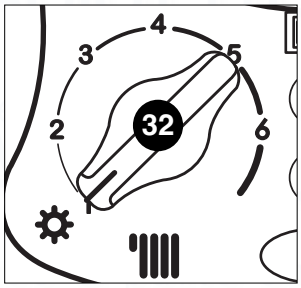

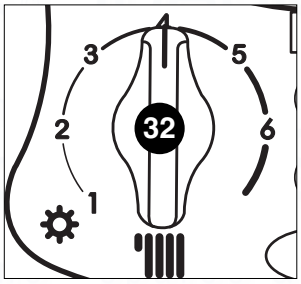

Summer and winter operation

The boiler produces hot water for heating and Domestic hot water. **Winter** operation means the production of hot water for heating and the production of Domestic hot water. **Summer** operation means the production of Domestic hot water only. The boiler control panel allows selection of winter or **summer** operation.

Keep the knob **32** in the ☼ position to select summer operation. To select **winter** operation, turn the knob **32** to a position between the minimum value and the maximum value.

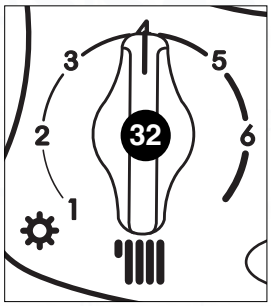

Heating temperature control

To adjust the heating water temperature, use the knob **32**, position the pointer between the minimum and maximum values; the temperature obtained can vary between 42°C and 82°C or 25°C and 75°C.
The heating command is activated by a mechanical programmer, or the room thermostat or a remote unit.

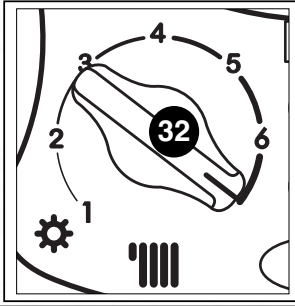

Installation with regulation by external temperature

(Only activated if the external sensor is installed)

In this case, by turning the knob **32**, it is possible to change the heating outlet temperature and therefore the ambient temperature of your home. When the knob is turned, the display indicates **P6** and the heating outlet temperature can be varied by - 20 °C to 20 °C.
However, the boiler can be controlled by the timeswitch, a Clima Manager remote control or a room thermostat.
As soon as the desired temperature is reached, the burner is switched off and the circulation pump stops or goes into post-circulation mode.

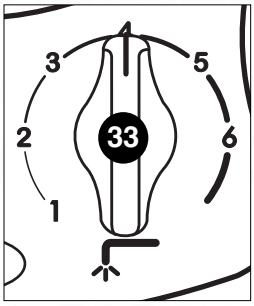

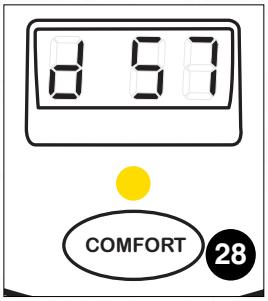

Regulation of Domestic hot water

To obtain Domestic hot water, press the button COMFORT **COMFORT 28** (yellow LED comes on)

To adjust the Domestic hot water temperature in winter or summer operation, use the knob **33**. It is possible to determine the temperature of water stored in the tank between 40°C and 70°C.

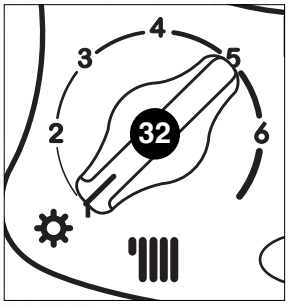

Interruption of heating

To interrupt heating, turn the knob **32** to the **sun** position ☼.
The boiler will continue to operate in the summer position to provide Domestic hot water only.

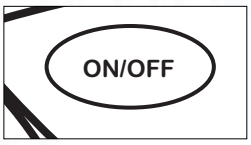

Switch-off procedure

To switch the boiler off, press the button ON/OFF **26**. Close the gas tap located under the boiler and move the boiler external power supply switch to the OFF position.

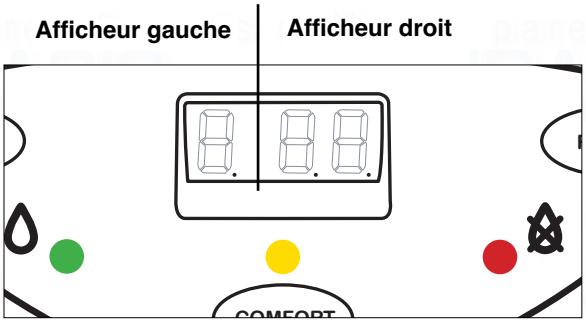

Display: display of current operations

During operation of the boiler, in other words when it is performing its normal functions, the left side of the display shows a series of characters referring to the operations, as indicated below:

O No heating command
C Heating
c pump in post-circulation mode for heating
d Domestic hot water
h Pump in post-circulation mode for Domestic hot water
b Tank reheating

On the right, the display shows (2 characters):
- in heating mode: heating installation output temperature
- in Domestic hot water distribution mode: drawing-off temperature.
- in tank reheating mode: tank temperature or drawing-off temperature.

4. ANTI-FROST DEVICE

The boiler is fitted with a device, which in the event that the water temperature falls below 8°C the pump activates and runs until a temperature of 18°C is attained. In the event that the water temperature falls below 3°C, the diverter valve switches to Domestic Hot Water and the burner fires on minimum power until a temperature of 33°C is attained.s

This device is only activated when the boiler is operating perfectly and
- the system pressure is sufficient;
- the boiler is powered electrically;
- gas is available.

5. MAINTENANCE

Schedule an annual maintenance check-up for the boiler with a CORGI registered Service Engineeer in the UK and with a competent person as described in I.S.813 for IE.

Correct maintenance always results in savings in the cost of running the system.

6. TROUBLE SHOOTING

This boiler is fitted with safety devices which are activated in certain situations and cause the boiler to stop operating.

CONDITIONS FOR STOPPAGE OF THE BOILER

There are two types of stoppage:
- Operating failure (A)
- Safety stop (E)

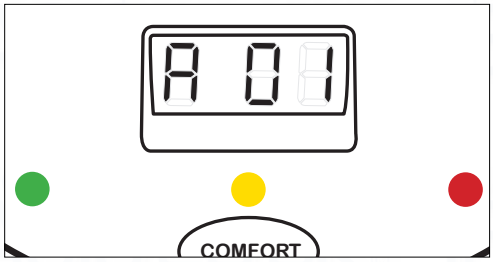

OPERATING STOPPAGE "A"

This type of stoppage is displayed in the form of a number preceded by a letter (A) as shown in the following table.
To clear this type of stoppage, press the reset button (**Reset**).
In the table, each error code is associated with the problem causing it to appear.

In the case of error ***A 02***, before calling a qualified technician, check the pressure gauge to see if the water pressure in the appliance is 1 bar. If necessary, restore the pressure using the filling valve located under the boiler and perform an ON/OFF operation by pressing the button. If the pressure falls frequently in the appliance, have a plumber check for water leaks.

N.B. Warning! The boiler is always connected to an electrical supply.

AFFICHEUR	CAUSE
A01	*Three ignition attempts*
A03	*The output temperature exceeds 105°C during operation*
A07	*Too many flame separations over a period during operation*
A17	*Input water circulation fault*
A18	*No water circulation*
A33	*Fan problem*
A97	*Electronic control problem*
A98	*Electronic control problem*
A99	*Electronic control problem*

IMPORTANT
If this type of failure occurs too often, call an approved after sales technical service. For safety reasons, the boiler will only allow 5 reignition attempts in 15 minutes (pressing of the RESET button). After the fifth attempt, the boiler goes into safety shutdown mode E 99.
This is therefore not a problem in the case of sporadic or isolated stoppages.

SAFETY SHUTDOWN "E"
In the event of a safety shutdown, indicated by display of the letter E followed by a number, there is no need to take action. The boiler will automatically attempt to reset and restart. If this does not occur, call a qualified technician. Switch off the boiler as described in the previous paragraph, close the gas tap and move the external electrical supply switch to the OFF position.

Antilocking of pump and three-way valve
To prevent locking of the components, the appliance performs a self-test every 24 hours: the pump starts up for 3 seconds and the diverting valve is operated.

7. FILLING INSTRUCTIONS

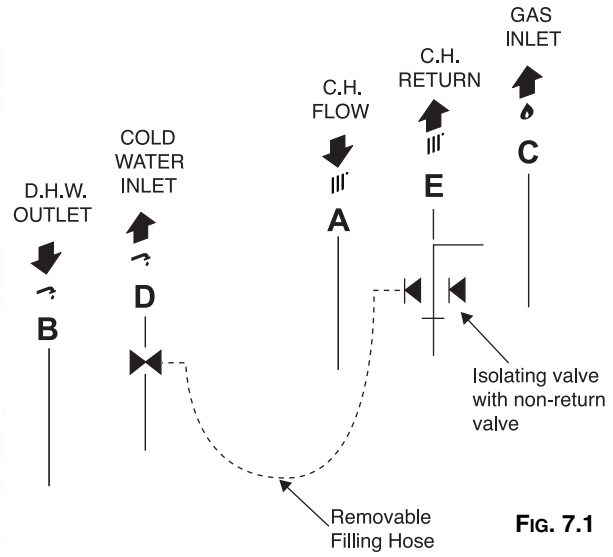

FIG. 7.1

A method for initially filling the system and replacing lost water during servicing and initial filling (in accordance with current Water Regulations), is provided as an integral part of the connection kit (see Fig. 3.1).

To fill the system and replace lost water it is necessary to proceed as follows:

- Switch off the power to the boiler;
- Ensure that the flexible hose is connected to both the cold water inlet connection and the C.H. flow connection;
- Open the black lever on the valve for the C.H. flow connection and slowly open the black handle on the valve for the cold water inlet until water is heard passing through the valves;
- Once the pressure gauge **37** (Fig. 2.1) reads between 1 and 1.5 bar close the levers on both the cold water connection and the C.H. flow connection
- Switch the power to the boiler back on.

NOTE: THE FLEXIBLE HOSE MUST BE REMOVED ONCE THE SYSTEM HAS BEEN FILLED.

8. TIME CLOCK

8.1 Setting the Mechanical Clock

1. General layout

The mechanical clock covers a 24 hour period. Each tappet represents 15 minutes **A (Fig 8.1)**. An override switch is located on the clock **B (Fig 8.1)**.

2. To set the time

To set the time of day, grasp the outer edge of the dial and turn slowly clockwise until the correct time is lined up with the arrow **C (Fig. 8.1)**.

3. To Set the "On" and "Off" times

The clock uses a 24hours system. e.g. 8 = 8.00 am and 18 = 6.00 pm "ON" periods are set by sliding all tappets between the "ON" time and the "OFF" time to the outer edge of the dial.The tappets remaining at the centre of the dial are the "OFF" periods.

4. For operation

Put the selector switch **B** to the ⏲ symbol to control the central heating by the clock. Put the switch **B** to «**I**» to select permanent operation or to «**0**» to turn the central heating off permanently.

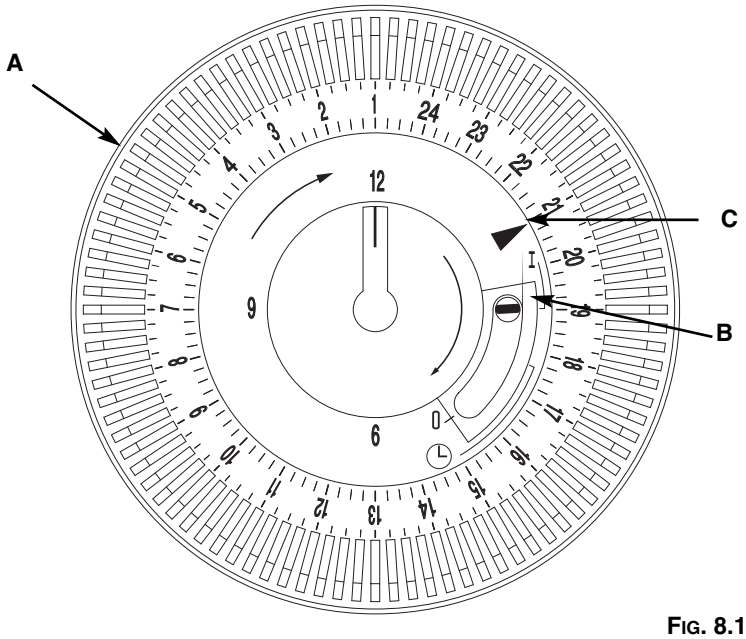

Fig. 8.1

8.2 Setting the Digital Clock

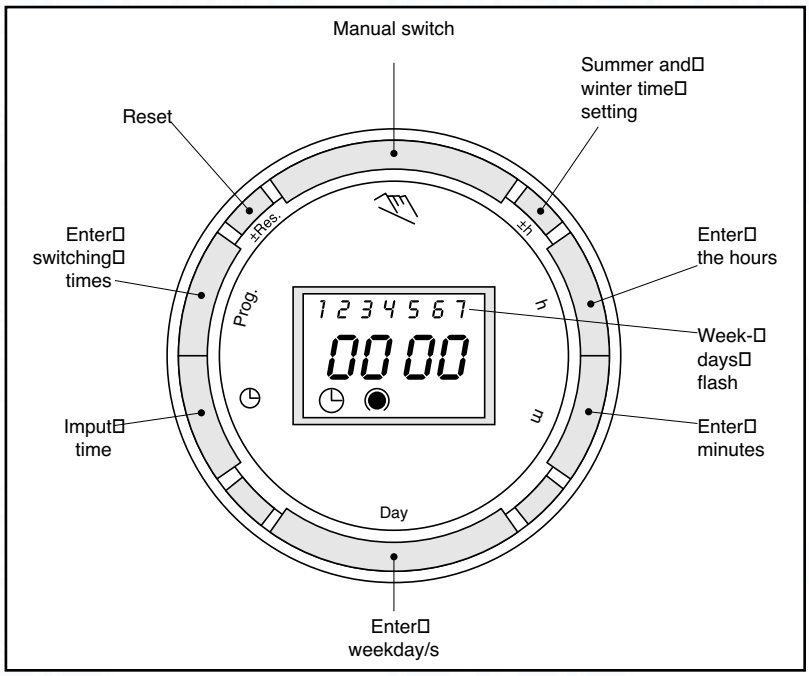

Automatic Operation	Manual Operation	Continuous Operation
= ON	= ON	= Continuously ON
= OFF	= OFF	= Continuously OFF
The switching times correspond to the program entered.	If the current switching mode is changed manually, the next switching time will be carried out automatically again according to the entered switching program.	You can only return to automatic mode from the continuously-ON and continuously-OFF switching modes by pressing the " " key.

Operating the time switch

The step marked with the symbol "►" are necessary to carry out a switching program.

Preparing for Operation

► Activate the "Res" switch (=RESET) to reset the time switch to its default setting (activate using a pencil or similar pointed instrument). Do this:
- every time you wish to "reset" the time switch
- to erase all switching times and the current time of day.

After approximately two seconds the following display appears:

► **Enter current time and weekday**
- Keep the "◷" key pressed down

During the summer time period press the +/- 1h key once.
Enter the hour using the "h" key
Enter the minutes using the "m" key
Enter the day using the "Day" key
1 = "Monday".....7 = Sunday
- Release the "◷" key.

► **Entering the switching times**

You have 20 memory locations available. Each switching time takes up one memory location.
Keep pressing the "Prog" key until a free memory location is shown in the display "– –:– –".

Programme ON or OFF with the “ ” key:

“○”= OFF; “◉”= ON

Enter the hour using “h”

Enter the minutes using “m”

If a switching command is to be carried out every day (1 2 3 4 5 6 7) then store using the “◷” key, otherwise select the day(s) it is to be carried out by using the “Day” key.

When the day selection is left blank, the programmed switching instruction operates at the same time every day

1 2 3 4 5 6 = Monday – Saturday

1 2 3 4 5 = Monday – Friday

6 7 =Saturday – Sunday

Selection of single days: 1 = Mon. ..... 2 =Tues.

Save the switching time with the “◷” key.

The time switch enters the automatic operating mode and displays the current time of day.

Begin any further entry of a switching time with the “Prog” switch. If your entry is incomplete, the segments not yet selected will blink in the display. After programming is completed, and you return the time clock to the current time display with the “◷” key, the time clock will not activate any switching instruction required for the current time. You may need to manually select the desired switching state with the “ ” key. Thereafter, as the unit encounters further switching instructions in the memory in real time, it will correctly activate all subsequent switching instructions.

Manual Override Switch “ ”

With the “ ” you can change the current setting at any time. The switching program already entered is not altered.

Reading the programmed switching times

Pressing the “Prog” key displays the programmed switching times until the first free memory location appears in the display “– – : – –”.

If you now press the “Prog” key once again, the number of free memory locations will be displayed, e.g. “**18**”. If all memory locations are occupied, the display “**00**” appears.

Changing the programmed switching times

Press the “Prog” key repeatedly until the switching time you want to change is displayed. You can now enter the new data. See point “**Entering the switching times**”.

Notes on storing switching times:

If you end your entry of the switching times by pressing the “Prog” key, then the switching time you have entered will be stored and the next memory location displayed.

In addition, a complete switching command is stored **automatically** after around 90 seconds provided **no other** key is pressed. The time switch then enters the automatic operating mode and displays the current time again.

Deleting individual switching times

Press the “Prog” key repeatedly until the switching time you wish to delete is shown in the display. Then set to “– –” using the “h” or “m” key and keep the “◷” key pressed down for around 3 seconds. The switching time is now erased and the current time is displayed.

AM / PM time display

If you press the “+/-1h” and “h” keys at the same time, the time display switches into the AM/PM mode.

9. GENERAL INFORMATION FOR THE INSTALLER

Read the instructions and recommendations in these Installation and Servicing Instructions carefully to ensure proper installation, use and maintenance of the appliance.

Keep this manual in a safe place. You may need it for your own reference while Servicing Technicians or your installer may need to consult it in the future.

This is a combined appliance for the production of central heating (C.H.) and domestic hot water (D.H.W.).

This appliance **must be used only** for the purpose for which it is designed.
The manufacturer declines all liability for damage caused by improper or negligent use.

No asbestos or other hazardous materials have been used in the fabrication of this product.

Before connecting the appliance, check that the information shown on the data plate and the Technical Information (Section 21) comply with the electric, water and gas mains of the property. You will find the data plate on the reverse of the control panel.

Do not install this appliance in a damp environment or close to equipment which spray water or other liquids.
Do not place objects on the appliance.
Do not allow children or inexperienced persons to use the appliance without supervision.

If you smell gas in the room, **do not turn on or off** light switches, use the telephone or any other object which might cause sparks.
Open doors and windows immediately to ventilate the room.
Shut the gas mains tap (at or adjacent to the gas meter) or the valve of the gas cylinder and call your Gas Supplier immediately.
If you are going away for a long period of time, remember to shut the mains gas tap or the gas cylinder valve.

Always disconnect the appliance either by unplugging it from the mains or turning off the mains switch before cleaning the appliance or carrying out maintenance.

In the case of faults or failure, switch off the appliance and turn off the gas tap. Do not tamper with the appliance.
For repairs, call your local Authorised Servicing Agent and request the use of original spare parts. For in-guarantee repairs contact MTS (GB) Limited.

Check the following at least once a year:

1 - Check the seal of water connections, replacing the gaskets if necessary.
2 - Check the seal of the gas connections, replacing the gaskets if necessary.
3 - Check the general condition of the appliance and of the combustion chamber visually.
4 - Visual check of the combustion: clean burners if necessary.
5 - With reference to point 3, dismantle and clean the combustion chamber if necessary.
6 - With reference to point 4, dismantle and clean the injectors if necessary.
7 - Visual check of the primary heat exchanger:
- check for overheating of the exchangers fins;
- clean the exhaust side of the exchanger and fan if necessary.

8 - Regulate the gas pressure, ignition pressure, partial flame, maximum flame.
9 - Check proper operation of the heating safety system:
- maximum safety temperature;
- maximum safety pressure.

10 - Check the proper operation of the gas safety system:
- gas or flame safety device;
- gas valve safety device.

11 - Check that the electrical connections have been made in compliance wit h the instructions shown in the Installation Instructions.
12 - Check the efficiency of the hot water supply (flow and temperature).
13 - Check pressure in the Domestic Expansion Vessel and top up as necessary.
14 - Check manually by turning the test knob the Temperature & Pressure Relief Valve.
15 - Check manually by turning the test knob the Expansion Relief Valve.
16 - Check discharge pipes from both the central heating and domestic hot water for obstructions.
17 - Check general operation of the appliance.
18 - Check the exhaust system for the combustion products.
19 - Check all unvented domestic hot water controls and systems

NOTE: These checks are not exhaustive

9.1 Overall View

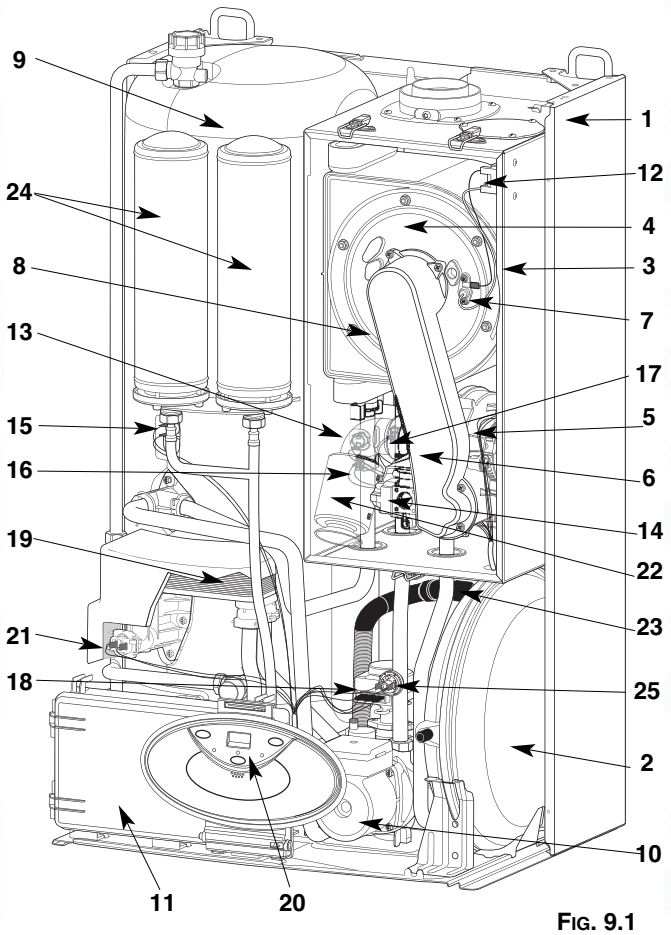

Fig. 9.1

1. - sheet steel casing
2. - pressurised expansion tank
3.- sealed casing
4. - burner/exchanger assembly
5. - 24 V fan
6. - air/gas connection assembly
7. - ignition electrodes
8. - flame detection electrode
9. - stainless steel Domestic hot water tank
10. - circulation pump
11.- electronic control unit
12. - ignition transformer
13.- overheat cut-off
14. - gas valve
15. - tank sensor
16. - heating outlet sensor
17. - heating return sensor
18.- distributor valve
19. - stainless steel plate Domestic hot water exchanger
20. - Domestic hot water flow rate controller
21. - Domestic hot water sensor
22. - silencer
23. - siphon
24. - Domestic hot water expansion cylinder
25. - pressure switch

10. INSTALLATION

The technical information and instructions provided herein below are intended for the installer / Servicing Technician so that the unit may be installed and serviced correctly and safely.

10.1 Delivery

There will be two items:
1 - The fully assembled boiler
2 - A separately boxed connection kit

10.2 Reference Standards

WATER REGULATIONS

In GB it is necessary to comply with the Water Supply (Water Fittings) Regulations 1999, for Scotland, The Water Bylaws 2000, Scotland. The Genus 30 Plus is an approved product under the Water Regulations.

To comply with the Water Regulations, you attention is drawn to The Water Regulations guide published by the Water Regulations Advisory Scheme (WRAS) gives full details of the requirements.

In IE, the requirements given in the current edition of I.S.813 and the current Building Regulations must be followed.

BUILDING REGULATIONS

These are a statutory document and take priority over all other regulations and recommendations. The installation of an unvented hot water storage cylinder is classified as a "Controlled Service" and Regulation G3 applies. To meet the requirements of the Regulation, installation of an unvented system should be undertaken by a "competent installer".

All installations of unvented hot water storage systems having a capacity of more than 15 litres should be notified to the relevant Local Authority by means of Building Notice or by the submission of full plans. It is important to note that it is a criminal offence to install an unvented hot water storage system without notifying the Local Authority.

The installation of this appliance must be in accordance with the relevant requirements of the Local Building Regulations, the current I.E.E. Wiring Regulations, the bylaws of the local water authority, in Scotland, in accordance with the Building Standards (Scotland) Regulation and Health and Safety document No. 635 “Electricity at work regulations 1989” and in the Republic of Ireland with the current edition of I.S. 813, the Local Building Regulations (IE).

C.O.S.H.H.

Materials used in the manufacture of this appliance are non-hazardous and no special precautions are required when servicing.

Installation should also comply with the following British Standard Codes of Practice:

BS 7593	**Treatment of water in domestic hot water central heating systems**
BS 5546	**Installation of hot water supplies for domestic purposes**
BS 5440-1	**Flues**
BS 5440-2	**Air supply**
BS 5449	**Forced circulation hot water systems**
BS 6798	**Installation of gas fired hot water boilers of rated input not exceeding 60kW**
BS 6891	**Installation of low pressure gas pipe up to 28mm**
BS 7671	**IEE wiring regulations**
BS 7074	**Specification for expansion vessels**
BS 5482	**Installation of L.P.G.**

and in the Republic of Ireland in accordance with the following Codes of Practice:

I.S. 813	**Domestic Gas Installations**

The following BS Standards give valuable information;

BS 5546	**Installation of hot water supplies for domestic purposes**
BS 5449	**Forced circulation hot water systems**
BS 7074	**Specification for expansion vessels**
BS 7593	**Treatment of water in domestic hot water central heating systems**

WARNING!!
The addition of anything that may interfere with the normal operation of the appliance without express written permission of the manufacturer or his agent could invalidate the warranty. In GB this could also infringe the **GAS SAFETY(Installation and Use) REGULATIONS**.

In the Republic of Ireland the installation and initial start up of the appliance must be carried out by a Competent Person in accordance with the current edition of I.S.813 “Domestic Gas Installations”, the current Building Regulations, reference should also be made to the current ETCI rules for electrical installation.

10.3 Siting the Appliance

The appliance may be installed in any room or indoor area, although particular attention is drawn to the requirements of the current I.E.E. Wiring Regulations, in Scotland, the electrical provisions of the Building Regulations applicable in Scotland, and in the Republic of Ireland, the current edition of I.S.813, with respect to the installation of the combined appliance in a room containing a bath or shower. The location of the boiler in a room containing a bath or shower should only be considered if there is no alternative.

Where a room-sealed appliance is installed in a room containing a bath or shower reference should be made to the relevant requirements.

In GB this is the current I..E.E. WIRING REGULATIONS and BUILDING REGULATIONS. In IE reference should be made to the current edition of I.S.813 and the current ETCI rules.

If the boiler is to be sited into a timber framed building, reference must be made to the current edition of the Institution of Gas Engineers Publication IGE/UP/7 (Gas Installations in Timber Framed Housing).

The location must permit adequate space for servicing and air circulation around the appliance as indicated in Section 10.4.
The location must permit the provision of an adequate flue and termination.
For unusual locations special procedures may be necessary.
BS 6798-1987 gives detailed guidance on this aspect.
A compartment used to enclose the appliance must be designed specifically for this purpose. No specific ventilation requirements are needed for the installation within a cupboard.

This appliance is not suitable for outdoor installation.

The type C appliances (in which the combustion circuit, air vent intake and combustion chamber are air-tight with respect to the room in which the appliance is installed) can be installed in any type of room.

Secondary ventilation is not required with this boiler. The boiler must be installed on a solid, non-combustible, permanent wall to prevent access from the rear.

10.4 Clearances

In order to allow for access to the interior of the boiler for maintenance purposes, the boiler must be fitted with a clearance of 450 mm in front 400 mm below the boiler and 200mm above the boiler, and installed in compliance with the clearance requirements indicated in **Fig. 10.1**.

10.5 Overall Dimensions

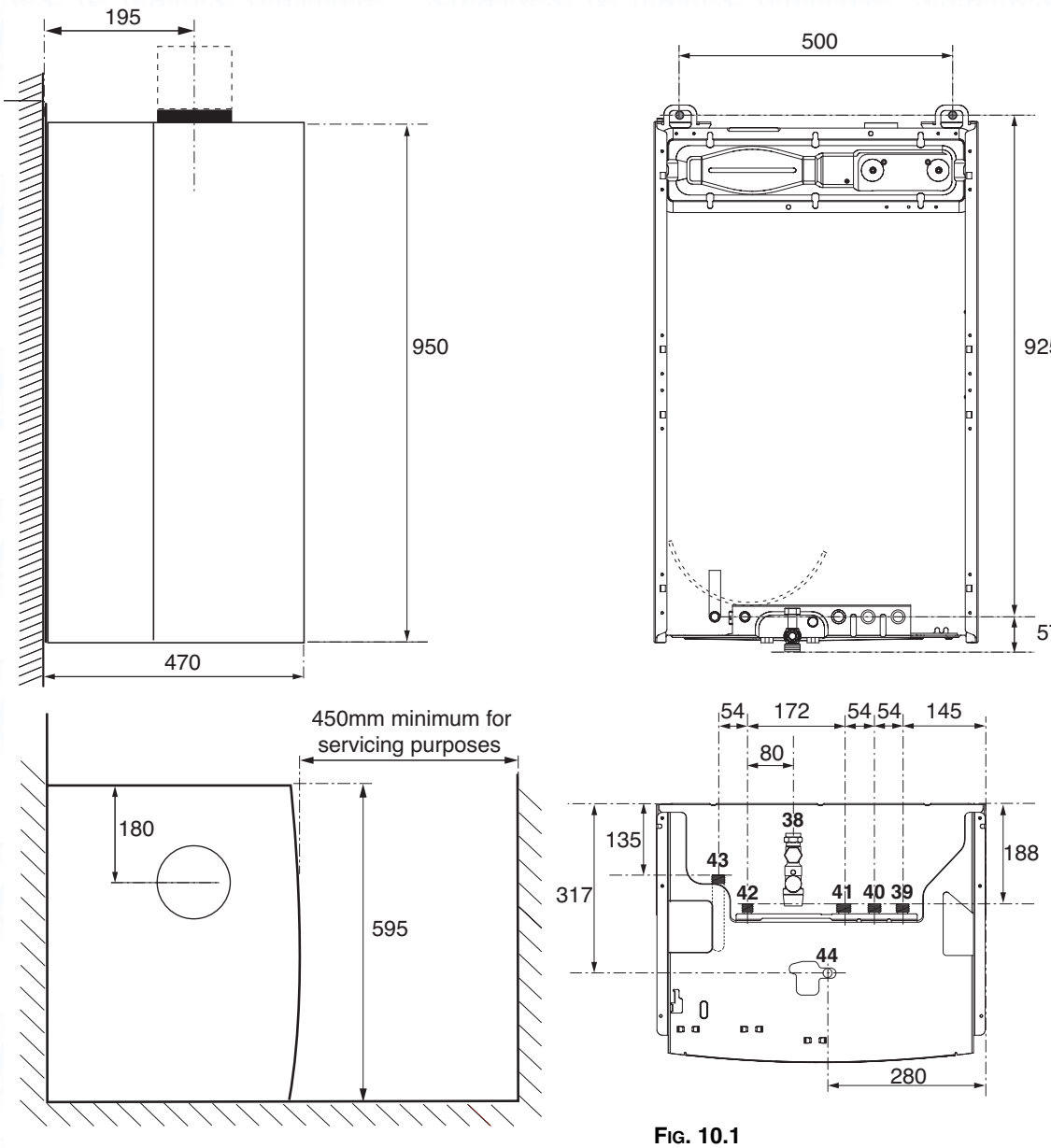

Legend:

39 = Gas service tap
40 = Heating return
41 = Heating flow
42 = Water service tap
43 = Tank hot water flow
38 = Water tank discharge valve
44 = Central heating discharge valve

Fig. 10.1

10.6 Mounting the Appliance

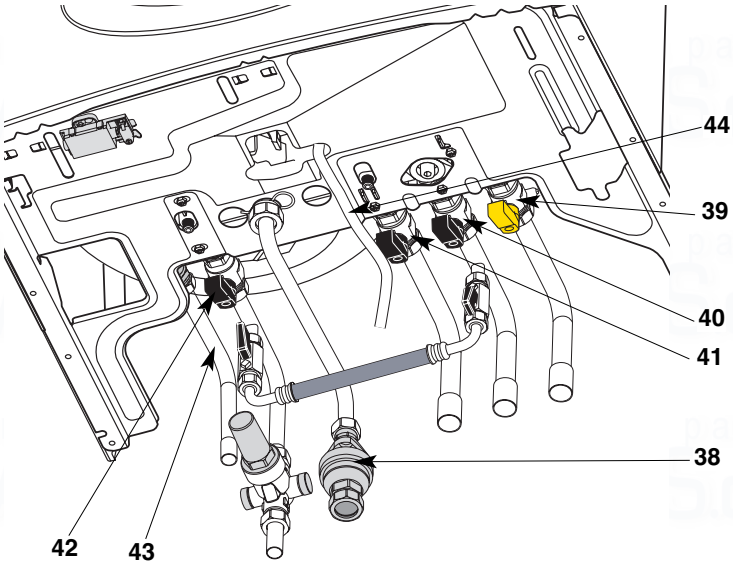

Legend:

39 = Gas service tap
40 = Heating return
41 = Heating flow
42 = Water service tap
43 = Tank hot water flow
38 = Water tank valve
44 = Heating valve

FIG. 10.2

After removing the boiler from its packaging, remove the template from the separate box containing the connection kit. NOTE: Pay particular attention to any test water that may spill from the appliance.

Place the template in the position the appliance is to be mounted and after ensuring it is hanging squarely, use it to drill the holes for the hanging bracket, connection kit and flue pipe(s) **NB:** For further information relating to the flue installation please refer to Section 11 FLUE CONNECTION. (If the appliance is to be fitted on a wall of combustible material, the wall **must** be protected by a sheet of fireproof material).
If the appliance is to be fitted into a timber framed building, guidance should be sought from the Institute of Gas Engineers document REF: IGE/UP/7.

10.6.1. Drill the wall and plug using those supplied with the connections kit, position the hanging bracket and secure with the wall bolts supplied, assembl the connection kit and secure to the wall. **NOTE:** It is highly recommended that a spirit level be used to position the appliance to ensure that it is perfectly level.

10.6.2. Position the appliance on the hanging bracket and connect the connection kit to the boiler connections. (see also Sections 10.8 Gas Connections, 10.9 Water Connections & FIG.10.2).

10.7 Electrical Connection

For safety purposes, have a competent person carefully check the electrical system in the property, as the manufacturer will not be held liable for damage caused by the failure to earth the appliance properly or by anomalies in the supply of power. Make sure that the residential electrical system is adequate for the maximum power absorbed by the unit, which is indicated on the rating plate. In addition, check that the section of cabling is appropriate for the power absorbed by the boiler.

The boiler operates with alternating current, as indicated in the Technical Information table (Section 21), where the maximum absorbed power is also indicated. Make sure that the connections for the neutral and live wires correspond to the indications in the diagram. The appliance electrical connections are situated on the reverse of the control panel (see the Servicing Instructions Section 18 for further information).

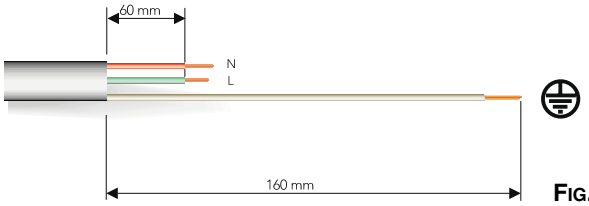

FIG. 10.3

Important!
In the event that the power supply cord must be changed, replace it with one with the same specifications. Make the connections to the terminal board located within the control panel, as follows:
- The yellow-green wire should be connected to the terminal marked with the earth symbol; make sure to re-use the ferrule mounted on the other supply cord;
- The blue wire should be connected to the terminal marked "N";
- The brown wire should be connected to the terminal marked "L".
Note: The diagrams for the electrical system are indicated in Section 13.

Warning, this appliance must be earthed.

External wiring must be correctly earthed, polarised and in accordance with relevant regulations / rules. In GB this is the current I.E.E. WIRING REGULATIONS. In IE reference should be made to the current edition of the ETCI rules. This boiler is supplied for connection to a 220 - 240 V~ 50 Hz supply.

The supply must be fused at 3 A.

The method of connection to the electricity supply must facilitate complete electrical isolation of the appliance, by the use of a fused double pole isolator having a contact separation of at least 3 mm in all poles or alternatively, by **means of a 3 A** fused three pin plug and unswitched shuttered socket outlet both complying with BS 1363.

The point of connection to the Electricity supply must be readily accessible and adjacent to the appliance unless the appliance is installed in a bathroom when this must be sited outside the bathroom.

10.8 Gas Connection

The local gas region contractor connects the gas meter to the service pipe.

The gas installation should be in accordance with the relevant standards. In GB this is BS6891 and in IE this is the current edition of I.S.813.

The connection the the appliance is a 22 mm copper tail located at the rear of the gas service cock (Fig. 10.2).

If the gas supply for the boiler serves other appliances ensure that an adequate supply is available both to the boiler and the other appliances when they are in use at the same time.

Pipe work must be of an adequate size. Pipes of a smaller size than the boiler inlet connection should not be used.

10.9 Water Connections

Central Heating

Detailed recommendations are given in BS 6798:1987 and BS 5449-1:1990, the following notes are given for general guidance.

Pipe Work:

Copper tubing to BS EN 1057:1996 is recommended for water pipes. Jointing should be either with capillary soldered or compression fittings.

Where possible pipes should have a gradient to ensure air is carried naturally to air release points and water flows naturally to drain taps.

The appliance has a built-in automatic air release valve, however it should be ensured as far as possible that the appliance heat exchanger is not a natural collecting point for air.

Except where providing useful heat, pipes should be insulated to prevent heat loss and avoid freezing.

Particular attention should be paid to pipes passing through ventilated spaces in roofs and under floors.

By-pass:

The appliance includes an automatic by-pass valve, which protects the main heat exchanger in case of reduced or interrupted water circulation through the heating system, due to the closing of thermostatic valves or cock-type valves within the system.

System Design:

This boiler is suitable only for sealed systems.

Drain Cocks:

These must be located in accessible positions to permit the draining of the whole system. The taps must be at least 15 mm nominal size an manufactured in accordance with BS 2870:1980.

Safety Valve Discharge (Primary Water):

The discharge should terminate facing downwards on the exterior of the building in a position where discharging (possibly boiling water & steam) will not create danger or nuisance, but in an easily visible position, and not cause damage to electrical components and wiring.

The discharge must not be over an entrance or a window or any other type of public access.

Mains Water Feed - Central Heating:

There must be no direct connection to the mains water supply even through a non-return valve, without the approval of the Local Water Authority, and must be in accordance with water supply regulations. Your attention is drawn to, for GB: Guidance G24.2 and recommendation R24.2 of the water regulations guide and for IE: the current edition of I.S.813.

Filling:

A temporary method for initially filling the system and replacing lost water during servicing and initial filling (complying to current water regulations and byelaws) is provided. The flexible hose must be removed once the system has been filled.

Domestic Hot Water

Storage Discharge Pipe Work

1) The tundish must be installed directly below the discharge outlet connection of the boiler. The tundish must also be in a position visible to the occupants, and positioned away from any electrical devices. The discharge pipe from the tundish should terminate outside in a safe place where there is no risk to persons in the vicinity of the discharge and to be of metal.
2) Discharge pipes from the temperature & pressure relief and expansion relief valve are joined together within the appliance.
3) The pipe diameter must be at least one pipe size larger than the nominal outlet size of the safety device unless it's total equivalent hydraulic resistance exceeds that of a straight pipe 9m long.

   i.e. Discharge pipes between 9m and 18m equivalent resistance length should be at least 2 sizes larger than the nominal outlet size of the safety device. Between 18 m and 27 m at least 3 sizes larger, and so on.

   Bends must be taken into account in calculating the flow resistance.

   See fig. 10.4 (page 19) and Table 1 (page 20).
4) The discharge pipe must have a vertical section of pipe at least 300 m in length, below the tundish before any elbows or bends in the pipework.
5) The discharge pipe must be installed with a continuous fall.
6) The discharge must be visible at both the tundish and the final point of discharge, but where this is not possible or practically difficult; there should be clear visibility at one or other of these locations. Examples of acceptance are:

   i) Ideally below a fixed grating and above the water seal in a trapped gully.

   ii) Downward discharges at a low level; i.e. up to 100 mm above external surfaces such as car parks, hard standings, grassed areas etc. These are acceptable providing that where children may play or otherwise come into contact with discharges, a wire cage or similar guard is positioned to prevent contact, whilst maintaining visibility.

iii) Discharges at high level; I.e. into a metal hopper and metal down pipe with the end of the discharge pipe clearly visible (tundish visible or not).

Or onto a roof capable of withstanding high temperature discharges of water 3 m from any plastic guttering systems that would take such a discharge (tundish visible).

iv) Where a single pipe serves a number of discharges, such as in blocks of flats, the number served should be limited to not more than 6 systems so that any installation can be traced reasonably easily.

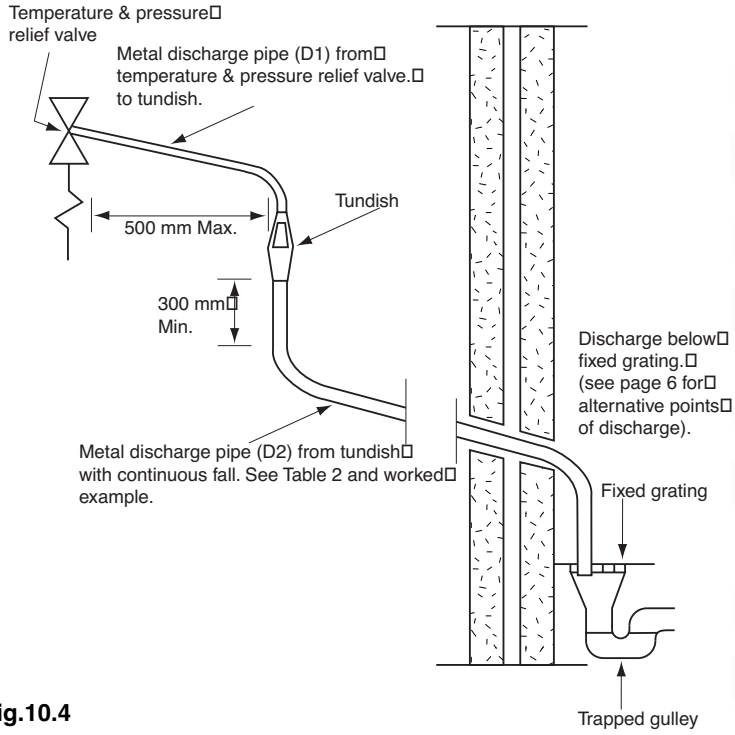

Fig.10.4

The single common discharge pipe should be at least one pipe size large than the largest individual discharge pipe to be connected.

If unvented hot water storage systems are installed where discharges from safety devices may not be apparent I.e. in dwellings occupied by the blind, infirm or disabled people, consideration should be given to the installation of an electronically operated device to warn when discharge takes place.

Note: The discharge will consist of scalding water and steam. Asphalt, roofing felt and non-metallic rainwater goods may be damaged by such discharges.

Warning

The outlet from the temperature & pressure relief valve must not be used for any other purpose.

The temperature & pressure relief valve must not be removed in any circumstances. Any of the above will totally invalidate the warranty.

Note

The discharge from the central heating and domestic hot water systems may be joined together after the tundish.

Air Release Points:

These must be fitted at all high points where air naturally collects and must be sited to facilitate complete filling of the system.

The appliance has an integral sealed expansion vessel to accommodate the increase of water value when the system is heated.

It can accept up to 7l (1.5 gal) of expansion water. If the heating circuit has an unusually high water content, calculate the total expansion and add an additional sealed expansion vessel with adequate capacity.

Domestic Water:

The domestic water must be in accordance with the relevant recommendation of BS 5546:1990. Copper tubing to BS EN 1057:1996 is recommended for water carrying pipe work and must be used for pipe work carrying drinking water. The domestic hot water temperature should be be adjusted to trip at 60˚C. This temperature will prevent the formation of limescale in hard water areas.

Note: This appliance is capable of producing domestic hot water of up to 70˚C. For extra security against scalding a thermostatic blending valve may be installed on the domestic hot water outlet.

Secondary Return:

The secondary return connection can be used as an option. A Non Return Valve (not supplied) must be fitted to prevent back flow and a Bronze Pump will be needed in conjunction with a Pipe Thermostat to circulate the hot water (neither of which are supplied).

Table 1. Sizing of copper discharge pipe "D2" for common temperature valve outlet sizes.

Valve outlet size	Minimum size of discharge pipe D1*	Minimum size of discharge pipe D2* from tundish	Maximum resistance allowed, expressed as a length of pipe (i.e. no elbow or bends)	Resistance created by each elbow or bend
G 1/2	15 mm	22 mm	Up to 9 m	0.8 m
		28 mm	Up to 18 m	1.0 m
		35 mm	Up to 27 m	1.4 m
G 3/4	22 mm	28 mm	Up to 9 m	1.0 m
		35 mm	Up to 18 m	1.4 m
		42 mm	Up to 27 m	1.7 m
G 1	28 mm	35 mm	Up to 9 m	1.4 m
		42 mm	Up to 18 m	1.7 m
		54 mm	Up to 27 m	2.3 m

Worked Example:

The example below is for a G 1/2 Temperature & Pressure Relief valve with a discharge pipe (D2) having 4 no. elbows and length of 7 m from the Tundish to the point of discharge.From Table 1

Maximum resistance allowed for a straight length of 22 mm copper discharge pipe (D2) from G 1/2 T & P valve is 9m.

Subtract the resistance for 4 no. 22 mm elbows at 0.8m each = 3.2 m.

Therefore the maximum permitted length equates to: 5.8 m.

As 5.8m is less than the actual length of 7 m therefore calculate the next largest size.

Maximum resistance allowed for a straight length of 28 mm pipe (D2) from G 1/2 T & P valve equates to: 18 m.

Subtract the resistance for 4 no. 28 mm elbow at 1.0m each = 4 m.

Therefore the maximum permitted length equates to: 14 m

As the actual length is 7 m, a 28 mm (D2) copper pipe will be satisfactory.

Residual Head of the Boiler ΔT = 20°C

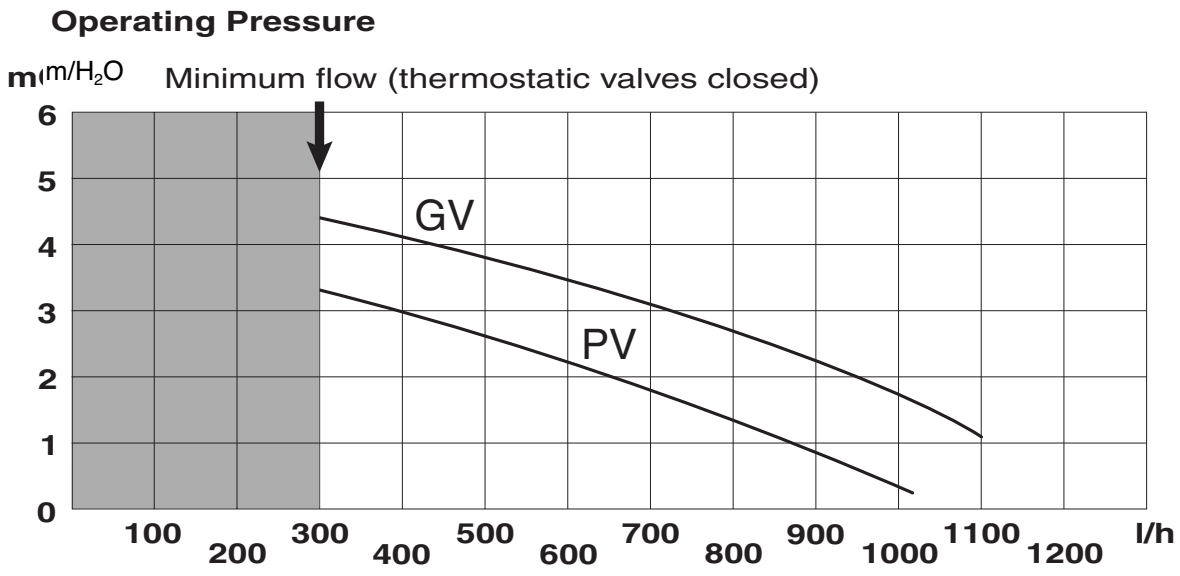

Fig. 10.5

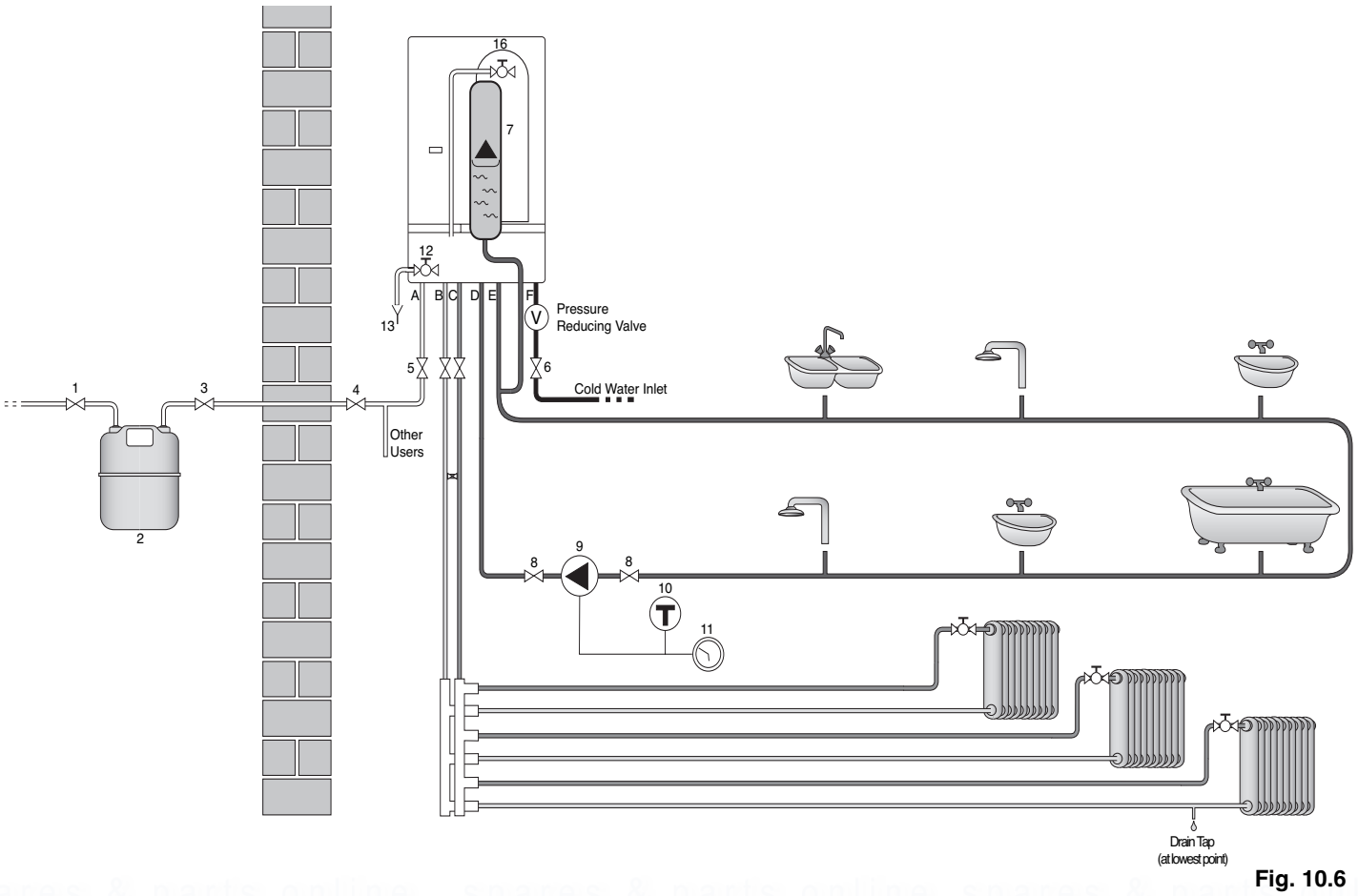

Fig. 10.6

A - Gas Inlet
B - C.H. Return
C - C.H. Flow
D - D.H.W. Secondary Return
E - D.H.W. Flow
F - C.W. Inlet
1 - Gas Meter Inlet Cock
2 - Gas Meter
3 - Gas Meter Outlet Cock
4 - Internal Gas Cock
5 - Appliance Gas Inlet Cock
6 - Cold Water Inlet Cock
7 - D.H.W. Expansion Vessel
8 - Cock
9 - Secondary Return Pump
10 - Thermostat
11 - Time Control Clock
12 - T&P Valve
13 - Tundish

11. Connecting the Flue

The boiler should only be installed with a flue system supplied by MTS (GB) Limited.
These kits are supplied separately to the appliance in order to respond to different installation solutions. For more information with regard to the inlet/outlet accessories consult the accessory catalogue. The boiler is supplied ready for connection to a concentric flue system.

NOTE: SEE PAGE 28 FOR MAXIMUM AND MINIMUM FLUE RUNS (TABLES A, B AND C)

IMPORTANT!!
BEFORE CONNECTING THE FLUE, ENSURE THAT 1/4 LITRE OF WATER HAS BEEN POURED INTO THE EXHAUST CONNECTION TO FILL THE CONDENSATE TRAP. SHOULD THE TRAP BE EMPTY THERE IS A TEMPORARY RISK OF FLUE GASSES ESCAPING INTO THE ROOM.

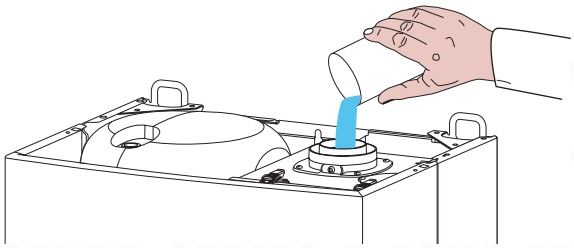

Warning
The exhaust gas ducts must not be in contact with or close to inflammable material and must not pass through building structures or walls made of inflammable material.
When replacing an old appliance, the flue system must be changed.

Important
Ensure that the flue is not blocked.
Ensure that the flue is supported and assembled in accordance with these instructions.

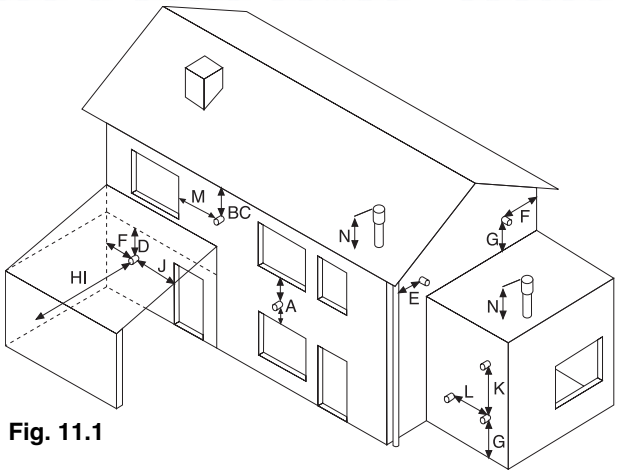

Fig. 11.1

TERMINAL POSITION		mm
A -	Directly above or below an openable window or other opening	300
B -	Below gutters, solid pipes or drain pipes	75
C -	Below eaves	200
D -	Below balconies or car-port roof	200
E -	From vertical drain pipes and soil pipes	150
F -	From internal or external corners	300
G -	Above ground or balcony level	300
H -	From a surface facing a terminal	600
I -	From a terminal facing a terminal	1200
J -	From an opening in the car port (e.g. door, window) into dwelling	1200
K -	Vertically from a terminal in the same wall	1500
L -	Horizontally from a terminal in the same wall	300
M -	Horizontally from an opening window	300
N -	Fixed by vertical flue terminal	

Installation without extension

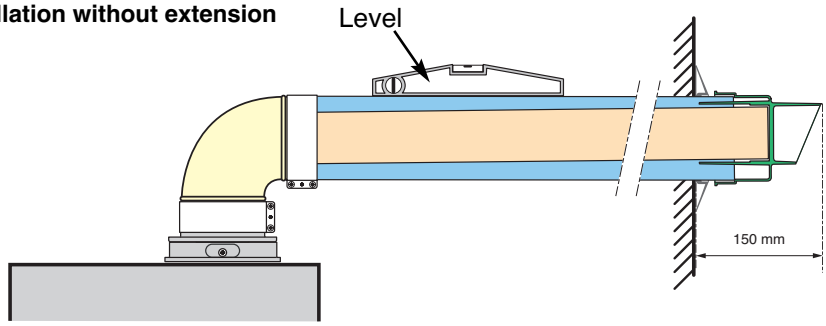

Installation with extension

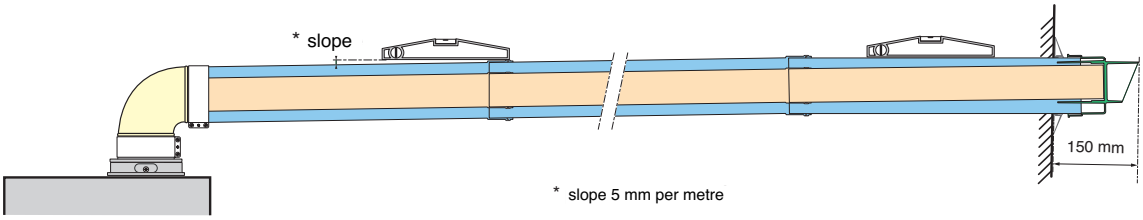

NOTE: THE FLUE MUST TERMINAL MUST BE AT LEAST 2 METRES FROM ANY OPENING IN A BUILDING OPPOSITE AND SHOULD NOT DISCHARGE ACROSS BOUNDARIES. IN ADDTION TO THIS, THE FLUE MUST NOT TERMINATE IN A PLACE LIKELY TO CAUSE NUISANCE.

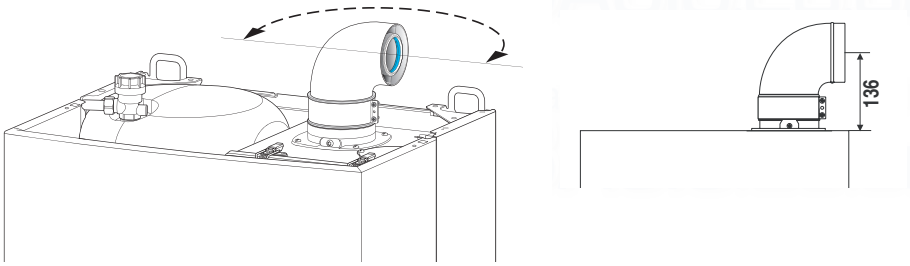

Fig. 11.2

In addition, it is also possible to use a split system by fitting a special adapter to the flue discharge collar and using one of the apertures for the air vent intake located on the top part of the combustion chamber.

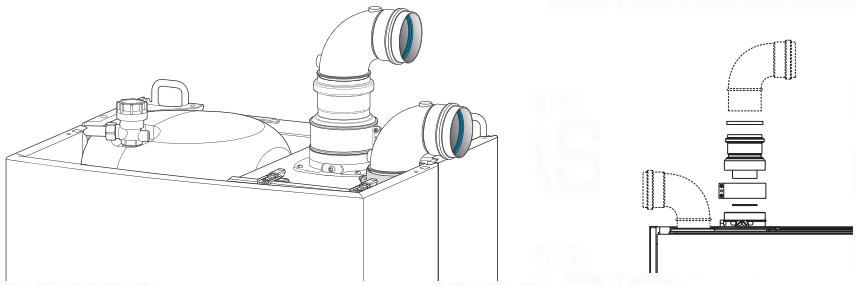

Fig.11.3

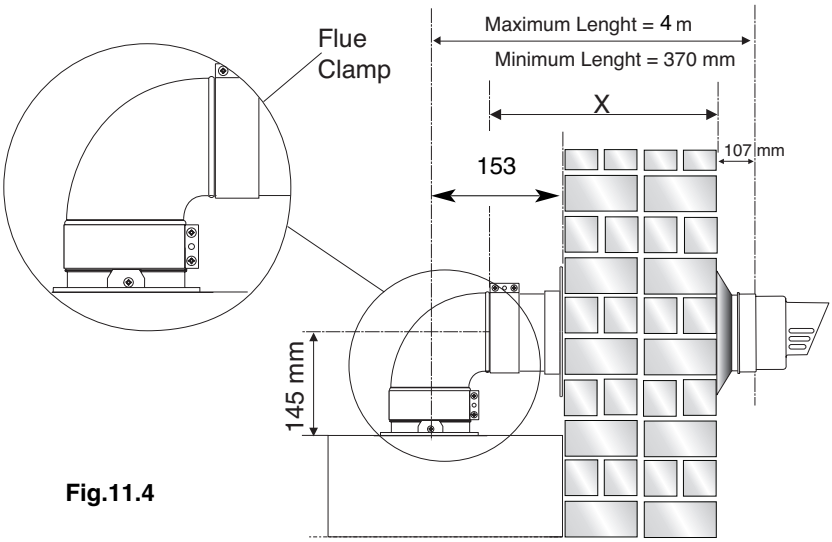

Fig.11.4

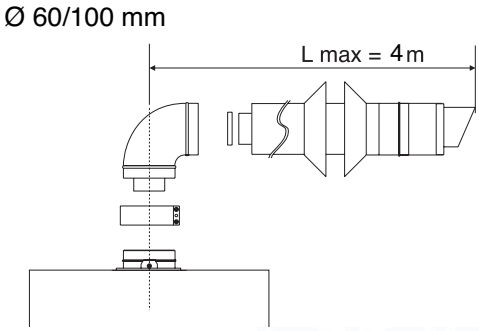

11.1 Fitting the coaxial flue (Ø 60/100 Horizontal)

Contents:
1x Silicone O-Ring (60mm)
1x Elbow (90°)
2x Wall Seals (Internal & External)
1x Flue Pipe including Terminal (1 metre - 60/100)
1x Flue Clamp
1x Screws
1x Seal

Once the boiler has been positioned on the wall, insert the elbow into the socket and rotate to the required position. NOTE: It is possible to rotate the elbow 360° on its vertical axis.

Using the flue clamp, seals and screws supplied **(Fig 11.5)** secure the elbow to the boiler.

The 1 metre horizontal flue kit (3318073) supplied is suitable for an exact **X dimension** of 815mm.

Measure the distance from the face of the external wall to the face of the flue elbow **(X - Fig 11.4),** this figure must now be subtracted from 815mm, you now have the total amount to be cut from the plain end of the flue.

Draw a circle around the outer flue and cut the flue to the required length taking care not to cut the inner flue, next cut the inner flue ensuring that the length between the inner and outer flue is maintained. **(Fig 11.5)**.
e.g.
X = 555mm
815-555 = 260mm (Length to be cut from the plain end of the flue).

Once cut to the required length, ensure that the flue is free from burrs and reassemble the flue. If fitting the flue from inside of the building attach the grey outer wall seal to the flue terminal and push the flue through the hole, once the wall seal has passed through the hole, pull the flue back until the seal is flush with the wall. Alternatively, the flue can be installed from outside of the building, the grey outer seal being fitted last.

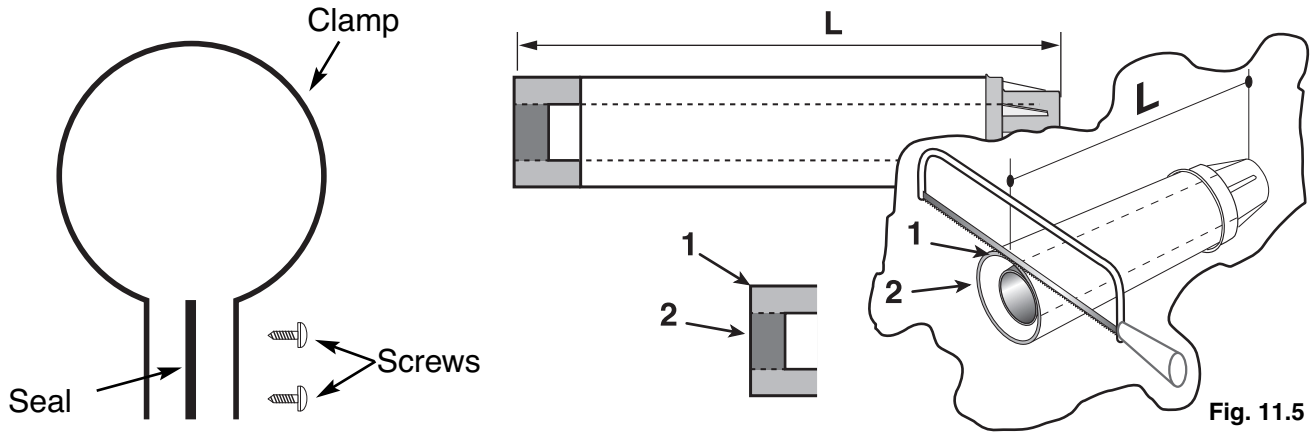

Fig. 11.5

11.2 Fitting the Coaxial Flue (Ø 60 / 100 Vertical)

NOTE: SEE PAGE 28 FOR MAXIMUM AND MINIMUM FLUE RUNS.

CONTENTS:
1X SILICONE O-RING (60 mm)
1X CONICAL ADAPTOR (60/100 mm)
1X VERTICAL FLUE KIT (80/125 mm)
3X SCREWS

The vertical flue kit is supplied with a specially designed weather proof terminal fitted, it can be used either with a flat roof or a pitched roof.

The Vertical flue kits useable lengths with the pitched roof flashings are indicated in **Fig. 11.6**.

Before proceeding to fit the flue, ensure that the maximum flue length has not been exceeded (See the tables on Page 20) and that all elbows and bends have been taken into consideration, the maximum flue length is 4 metres, for each additional 90° elbow 1 metre must be subtracted from the total flue length, and for each 45° 0.5 metres must be subtracted from the total flue length **(the height of the vertical adaptor and a 45° bend can be seen in Fig. 11.7)**.

Mark the position of the flue hole in the ceiling and/or roof (see **Fig. 11.6** for distance from wall to the centre of the flue).

Cut a 120 mm diameter hole through the ceiling and/or roof and fit the flashing plate to the roof.

DO NOT cut the vertical flue kit.

To connect the vertical flue kit directly to the boiler, place the vertical starter kit **(Part No. 3318079)** (see **Figs. 11.6 & 11.7**) onto the exhaust manifold and secure with the clamp, fit the vertical adaptor onto the vertical starter kit (note: there is no need to use a clamp to secure this as it is a push fit connection), the vertical flue kit must then be inserted through the roof flashing, this will ensure that the correct clearance above the roof is provided as the terminal is a fixed height.

Should extensions be required, they are available in 1 metre **(Part No. 3318077)**, 500 mm **(Part No. 3318078)** and 160 mm lengths, they must be connected directly to the vertical starter kit before connecting the adaptor to allow the vertical flue kit to be fitted. In the event that extension pieces need to be shortened, they ***must*** only be cut at the male end and it must be ensured that the inner and outer flue remain flush.

When utilising the vertical flue system, action must be taken to ensure that the flue is supported adequately to prevent the weight being transferred to the appliance flue connection by using 1 flue bracket per extension.

When the flue passes through a ceiling or wooden floor, there must be an air gap of 25 mm between any part of the flue system and any combustible material. The use of a ceiling plate will facilitate this. Also when the flue passes from one room to another a fire stop must be fitted to prevent the passage of smoke or fire, irrespective of the structural material through which the flue passes.

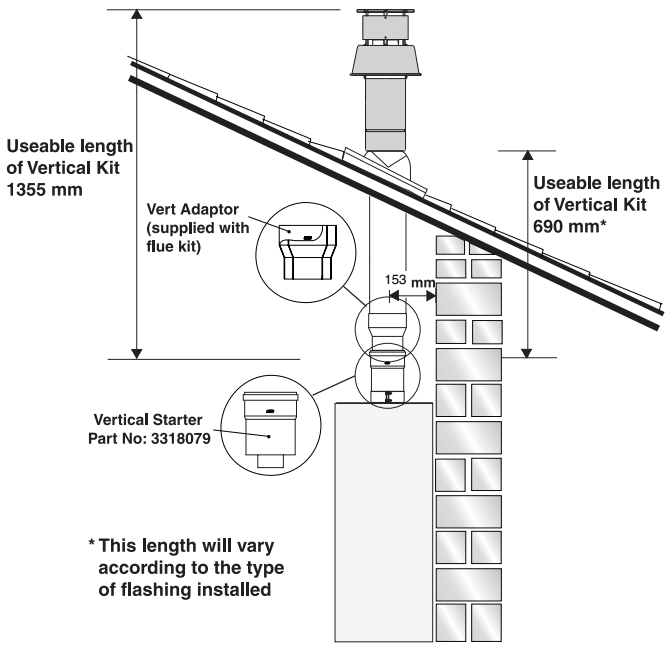

Fig. 11.6

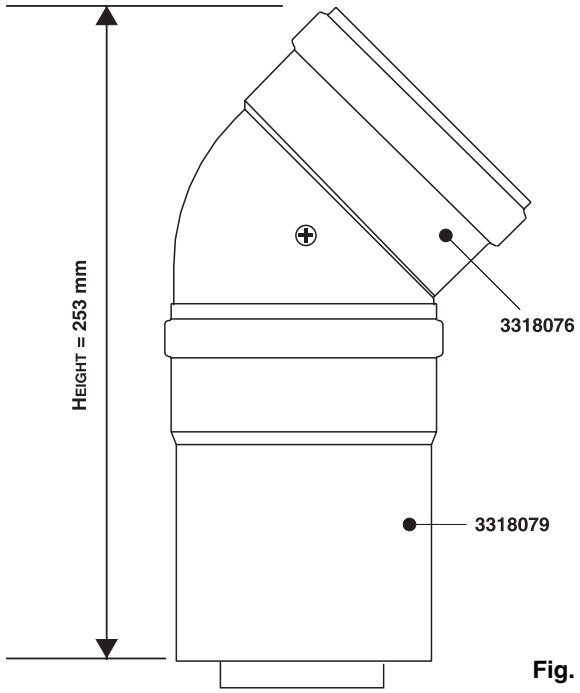

Fig. 11.7

11.3 Fitting the 5” Flue (Ø 80 / 125 Horizontal/vertical)

Should the flue require extending, the flue connections are push fit, however, one flue bracket should be used to secure each metre of flue.

NOTE: SEE PAGE 28 FOR MAXIMUM AND MINIMUM FLUE RUNS.

Once the boiler has been positioned on the wall, it is necessary to insert the Ø80/125 adaptor (**FIG. 11.8**) for both horizontal and vertical flue runs into the boiler flue socket (not supplied with flue kit - **Part No 3318095**).

Push the adaptor onto the boilers flue connection, grease the seals then add extensions or elbows as required, secure the adaptor, using the clamp and screws provided.

To fit extensions or elbows it is first necessary to ensure that the lip seal is fitted correctly into the inner flue, once verified, it is simply necessary to push them together, no clamps are necessary to secure the flue components.

Before proceeding to fit the flue, ensure that the maximum flue length has not been exceeded (See the tables on Page 20) and that all elbows and bends have been taken into consideration, the maximum flue length is 10 metres, for each additional 90° elbow 1 metre must be subtracted from the total flue length, and for each 45° 0.5 metres must be subtracted from the total flue length **(the height of the vertical adaptor and a 45° bend can be seen in Fig. 11.9 and a 90° bend in Fig. 11.10)**.

NOTE: **DO NOT** CUT THE VERTICAL FLUE KIT.

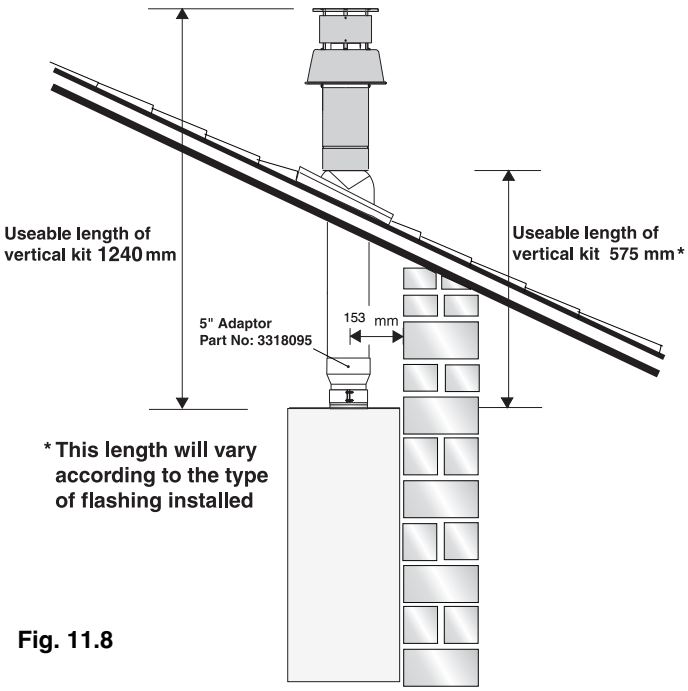

Fig. 11.8

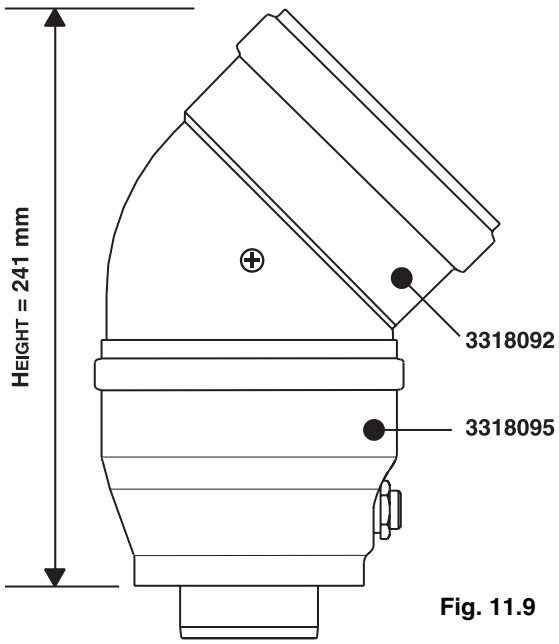

Fig. 11.9

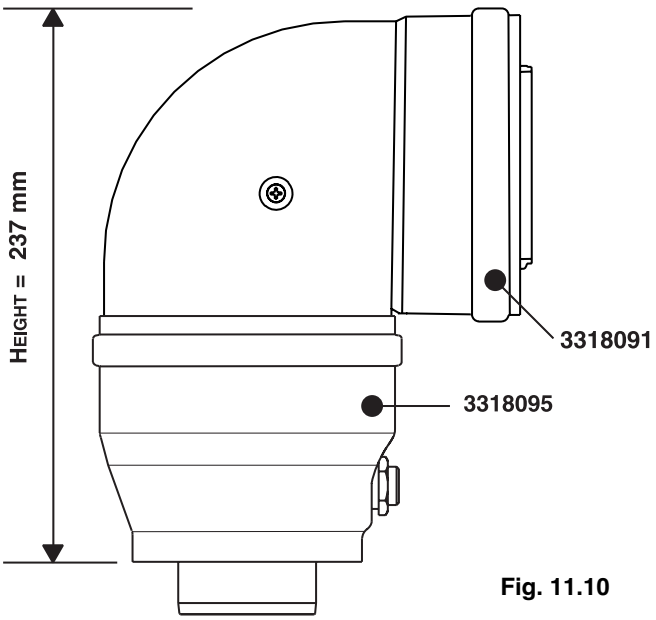

Fig. 11.10

11.4 Fitting the twin pipe (Ø80/80)

NOTE: SEE PAGE 28 FOR MAXIMUM AND MINIMUM FLUE RUNS (TABLE C)

Where it is not possible to terminate the flue within the distance permitted for coaxial flues, the twin flue pipe can be used by fitting a special adaptor to the flue connector and using the aperture for the air intake located on top of the combustion chamber.

Always ensure that the flue is adequately supported, avoiding low points. (MTS supply suitable clamps as Part No. 705778).
To utilise the air intake it is necessary to:

1) Take the air intake cover off
2) Assemble the flange on the header supplied with the boiler
3) Insert the restrictor if necessary, on the tube or the elbow
4) Insert the header on the tube or the elbow up until the lower stop
(you do not have to use the washer).
5) Insert the elbow/header in the boiler air intake hole and fasten it with screws

The twin flue pipes can be fitted with or without additional elbows and need no clamps, simply ensure that the red o-ring is inserted in the female end of the flue pipe and push the extension piece fully into the previous section of flue pipe or elbow, check that the o-ring is not dislodged when assembling the flue.

Twin pipe can also be converted back to Coaxial flue to enable vertical termination with a coaxial kit by using the pipe bridge (Twin - Coaxial Adaptor - Part No. 705767). When running the twin flue pipe vertically.

It is not recommended that the pipe bridge for horizontal termination, however in the unlikely event that this proves to be a necessity it is extremely important that the entire flue has a fall of 5mm in every metre back to the boiler, and where the 60mm inner flue of the concentric terminal connects to the pipe bridge, this point must be adequately sealed with silicone sealant to avoid condense leakage at this point.

When siting the twin flue pipe, the air intake and exhaust terminals must terminate on the same wall, the centres of the terminals **must** be a minimum of 280 mm apart and the air intake **must** not be sited above the exhaust terminal (refer to Fig. 29). The air intake pipe can be run horizontally, however, the terminal and the final 1 metre of flue must be installed with a fall away from the boiler to avoid rain ingress.

It is also strongly recommended that the air intake pipe run be constructed of insulated pipe to prevent condense forming on the outside of the tube.

The maximum permissible flue length for twin flue is dependent on the type of run used.

For flue runs with the intake and exhaust pipes under the same atmospheric conditions (TYPE 4) the maximum length is 60 metres (24kW and 30kW), for runs with the terminals under different atmospheric conditions (TYPE 5) the exhaust terminal **must** extend 0.5 metres above the ridge of the roof (this is not obligatory if the exhaust and air intake pipes are located on the same side of the building). For TYPE 5 also, the maximum permissible combined length is 60 metres (24kW and 30kW).

The maximum length is reached by combining the total lengths of both the air intake and exhaust pipes. Therefore a maximum length of 60 metres for example, will allow a flue run of 30 metres for the air intake and 30 metres for the exhaust pipes, also for each 90° elbow 2.2 metres must be subtracted from the total length and for each 45° elbow 1.4 metres must be subtracted from the total flue length.

Some of the acceptable flue configurations are detailed on page 29.

For further information relating to flue runs not illustrated, please contact the Technical Department on 0870 241 8180.

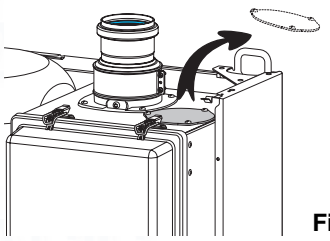

Fig. 11.12

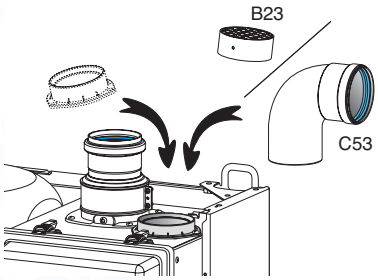

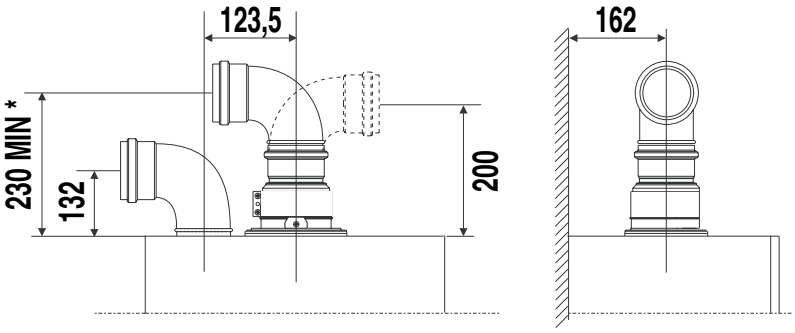

Fig. 11.13

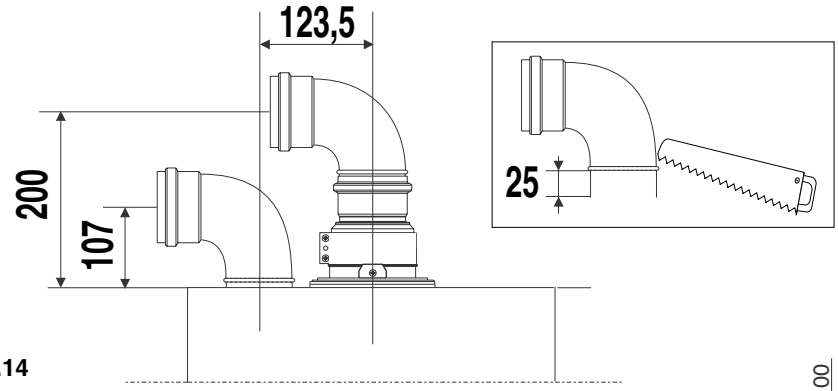

Fig. 11.14

In the event that twin flue pipes are used, and the boiler has a side clearance of less than 60mm from the wall, it is necessary to cut a larger diameter hole for the flue pipe, this should be ø100 mm, this will then allow for easier assembly of the air intake elbow and the tube outside the wall (see Fig. 11.14).

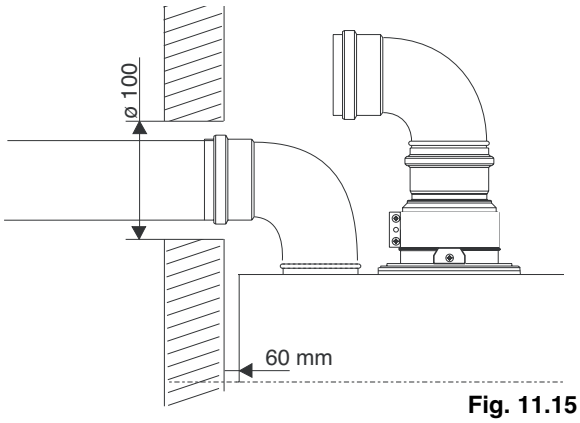

Fig. 11.15

TABLE A	**Concentric outlet 60/100**	**Min length**	**Max. length**	**Length equivalency for**	
	35 kW	**0.3 m**	**4 m**	**45° elbow**	**0.5 m**
				90° elbow	**1 m**
TABLE B	**Concentric outlet 80/125**	**Min length**	**Max. length**		
	35 kW	**0.3 m**	**10 m**	**45° elbow**	**0.5 m**
				90° elbow	**1 m**
TABLE C	**Twin flue outlet 35 kW**	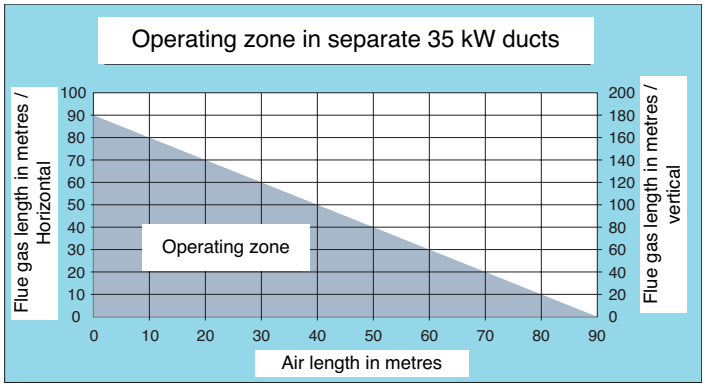			

For coaxial systems, the maximum development value, mentioned in the table above also takes into account an elbow.
For twin flue systems the maximum development value, mentioned in the table includes the exhaust gas/air intake terminal.

Type 5 outlets should respect the following instructions:
1- Use the same ø 80 mm flue pipes for the gas intakes and exhaust gas ducts.
2- If you need to insert elbows in the gas intake and exhaust gas ducts, you should consider for each one the equivalent length to be included in the calculation of developed length.
3- The exhaust gas duct should jut above the roof by at least 0.5 m.
4- The intake and exhaust gas ducts in Type 5 must be installed on the same wall, or where the exhaust is vertical and the air intake horizontal, the terminals must be on the same side of the building.

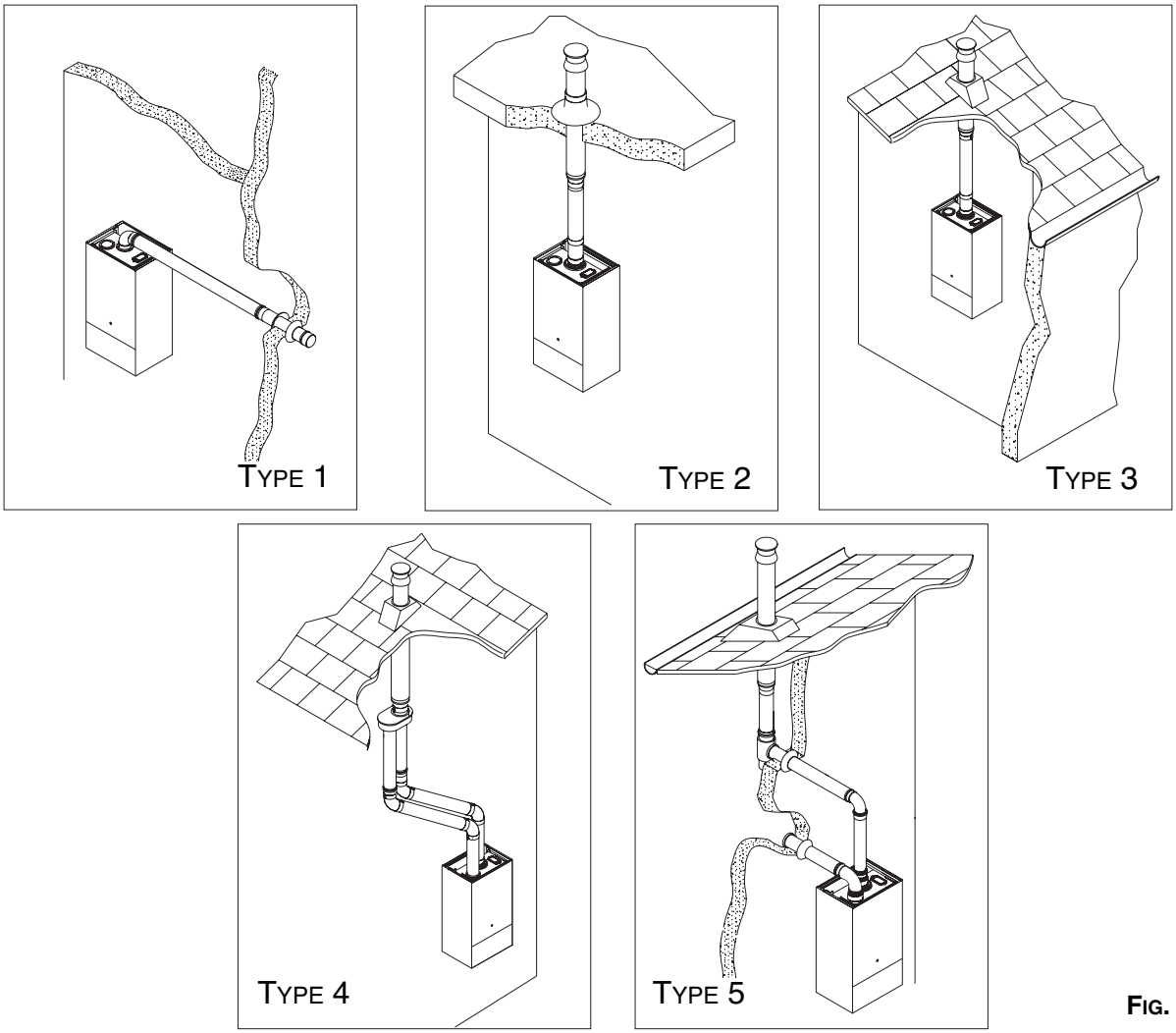

FIG. 11.16

NOTE: DRAWINGS ARE INDICATIVE OF FLUEING OPTIONS ONLY.

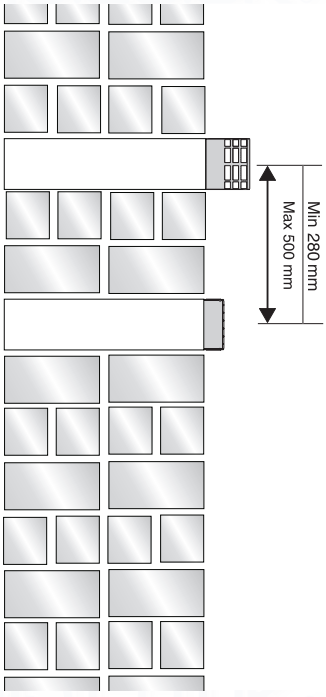

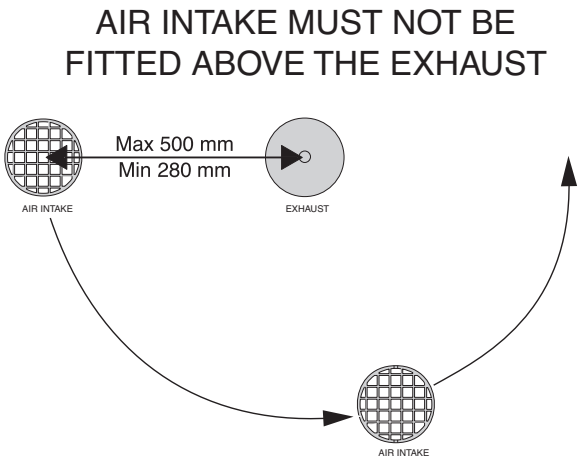

FIG. 11.17

12. ELECTRICAL CONNECTIONS

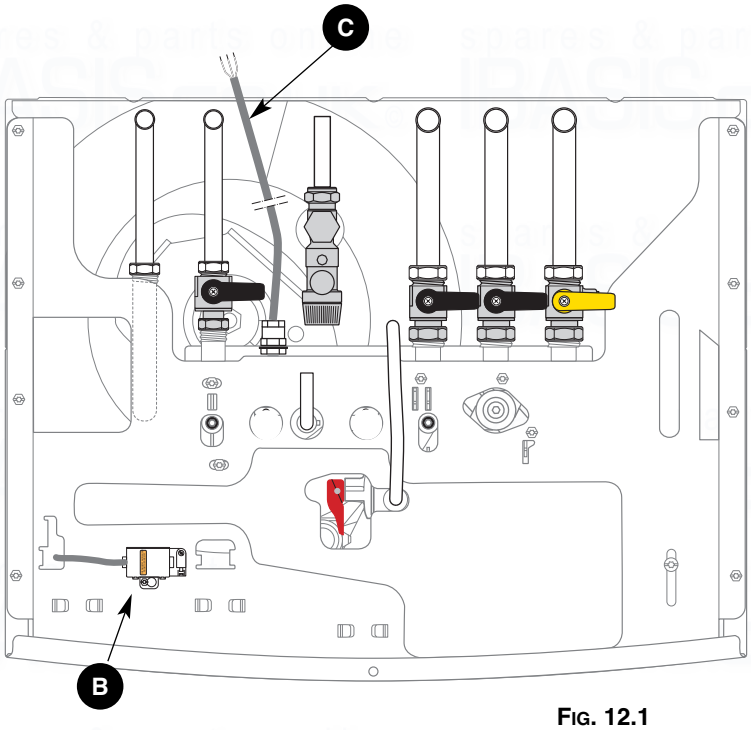

FIG. 12.1

The 220-240 V and earth connection are made by using the lead provided **C** (Fig. 12.1)

IMPORTANT!!

CONNECTION SHOULD BE MADE VIA A 3 AMP FUSED DOUBLE POLE ISOLATING SWITCH WITH CONTACT SEPERATION OF AT LEAST 3MM ON BOTH POLES. ALTERNATIVELY, A FUSED 3 AMP, 3 PIN PLUG AND UNSWITCHED SOCKET MAY BE USED, PROVIDED IT IS NOT USED IN A ROOM CONTAINING A BATH OR SHOWER. IT SHOULD ONLY SUPPLY THE APPLIANCE.

External Controls

Open the cover **B** with a screwdriver (Fig. 12.2)

The room thermostat is connected onto this connector **B** (Fig. 12.1)

- remove the bridge **S** (Fig. 12.3)
- connect the thermostat in place of the bridge **S** (Fig. 12.3)
- If a remote time clock is to be fitted, using a volt-free switching time clock, connect the wires from the time clock following the points above. (see also Fig. 12.4)

Note: Before connecting an external time clock, disconnect the internal time clock as described in Section 18.3.4 (page 49)

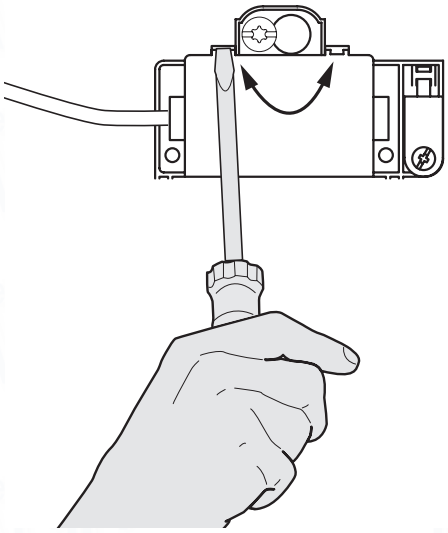

FIG. 12.2

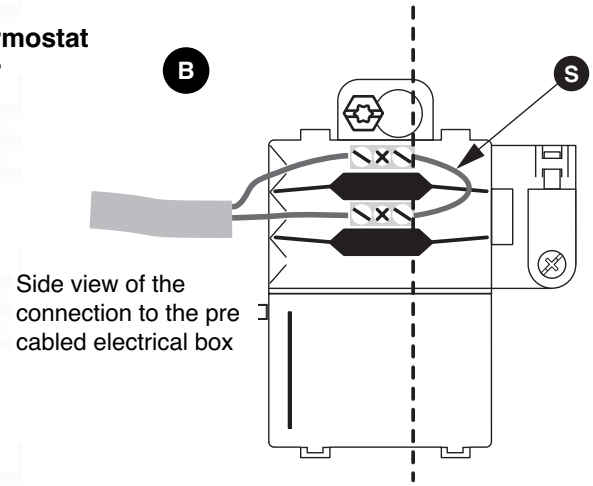

FIG. 12.3

Outside sensor

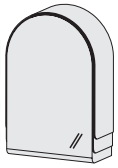

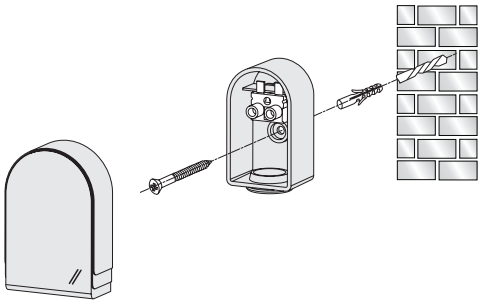

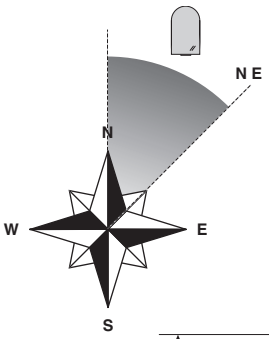

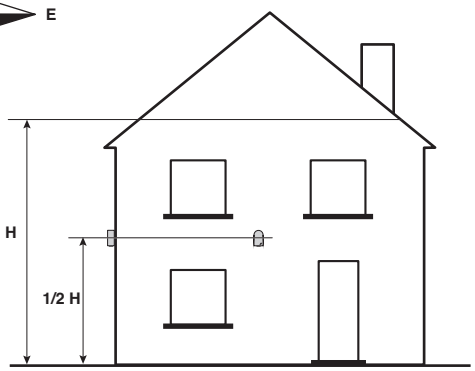

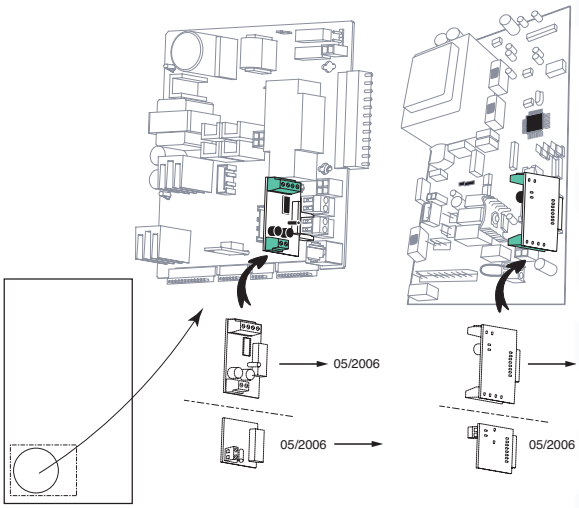

Diagram A
Room Thermostat

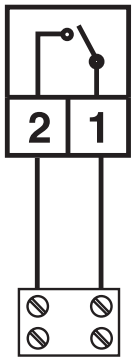

Boiler terminal block (located on reverse of the control panel)

Diagram B
External Timeclock / Programmer

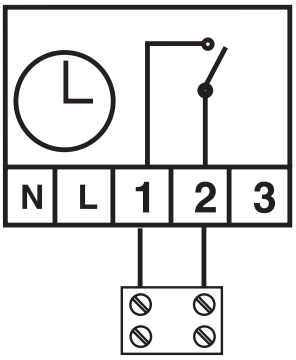

Boiler terminal block (located on reverse of the control panel)

Diagram C
External Room Thermostat and Volt Free Timeclock / Programmer Wired in Series

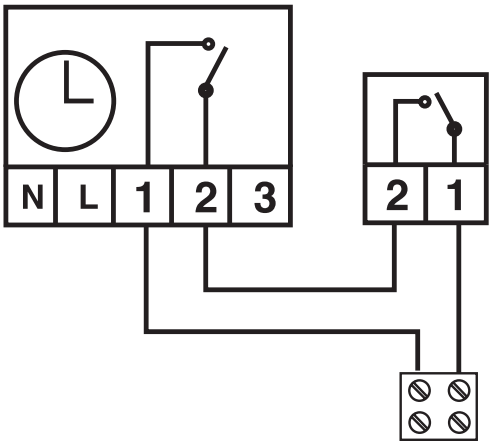

Boiler terminal block (located on reverse of the control panel)

Timeclock and Room Thermostat low voltage compatible

Fig. 12.4

13. ELECTRICAL / SYSTEM DIAGRAMS

CN5	1	White	Interface Card
	2	Blue	
	4	Yellow	
	5	Brown	
	6	Black	
	7	Red	
	11	Blue	Spark generator
	12	Red	
CN8	1	Grey	Heating flow thermistor
	10	Grey	
	2	Black	Heating return thermistor
	11	Black	
	4	White	Domestic hot water flowswitch
	8	White	
	5	Purple	Domestic hot water thermistor
	9	Purple	

CN12	1	Grey	Tank thermistor
	2	Grey	
	3	Black	Pressure switch
	4	Black	
	5	Red	Overheating safety device
	6	Red	
CN1	1	Blue	Fan
	2	Yellow	
	3	Brown	
	4	Black	
	5	Red	
CN2	8	White	Ionisation
CNF	1	Red	Gas valve
	2	Blue	
CN3 / CN31		Yellow / Green	Mass / Ground

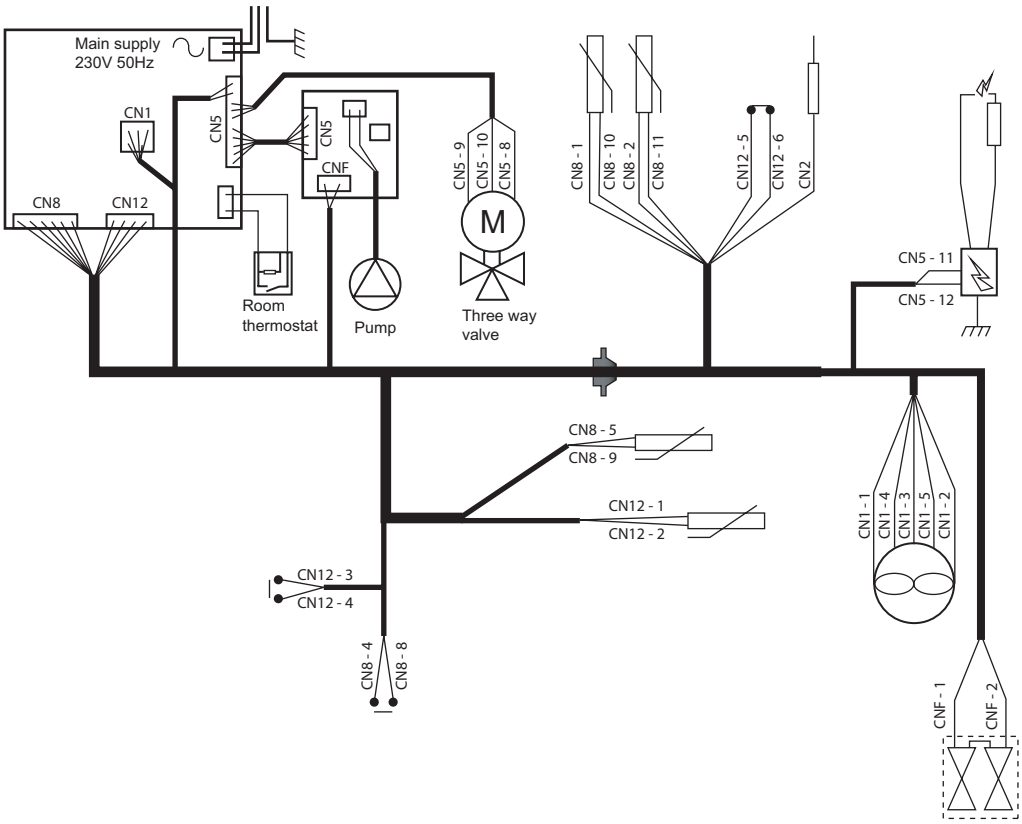

14. WATER CIRCUIT DIAGRAMS

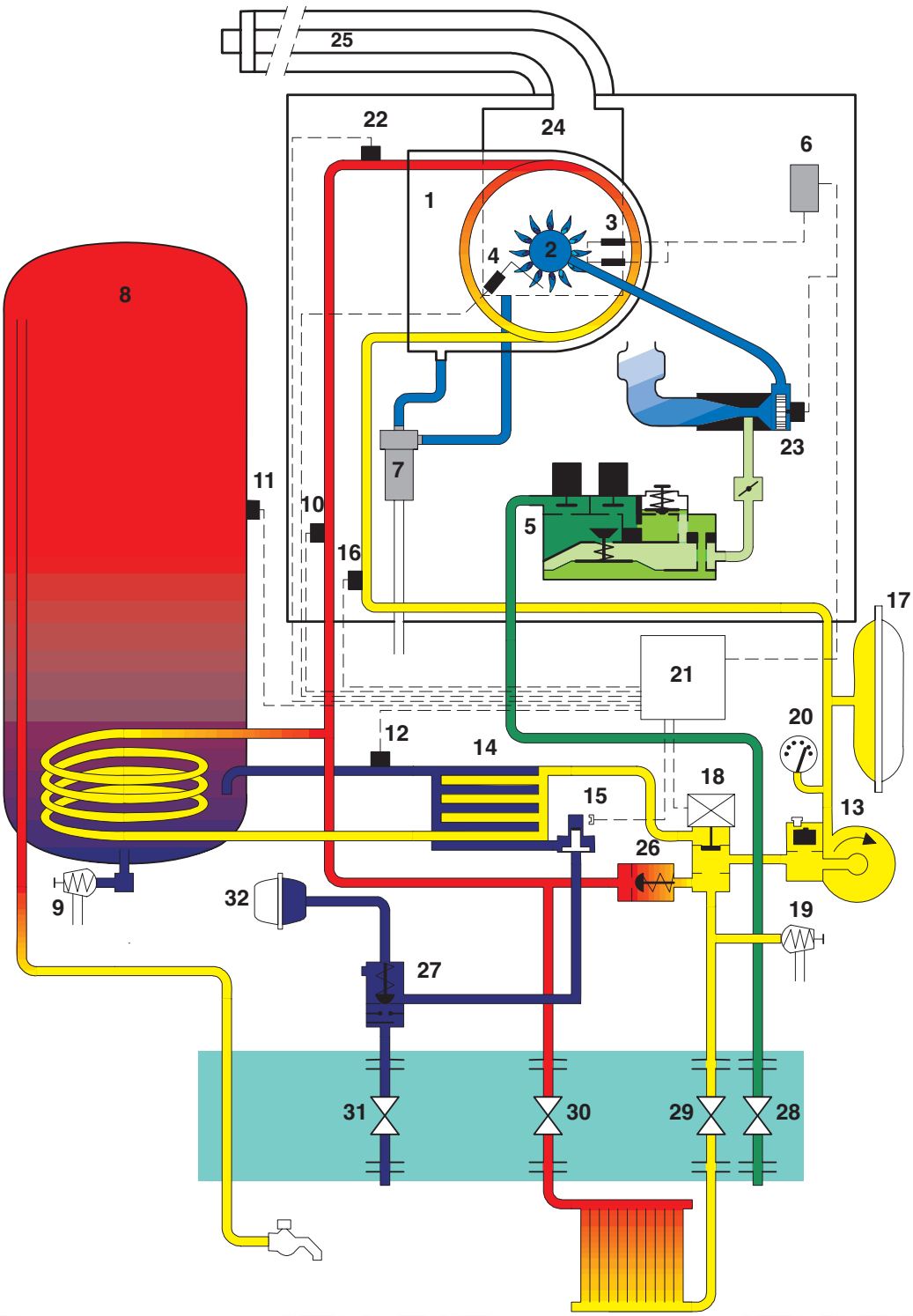

LEGEND :

1 – Main heat exchanger
2 - Burner
3 – Ignition electrodes
4 – Flame detection electrodes
5 – Modulating gas valve
6 – Spark generator
7 - Siphon
8 – Domestic hot water tank
9 – Water tank valve
10 – Heating flow thermistor
11 – Tank thermistor
12 – Hot water control thermistor
13 - Pump
14 – Secondary plate heat exchanger
15 – DHW activator
16 – Heating return thermistor
17 – Heating expansion vessel
18 – Three way valve
19 – Heating safety valve
20 – Pressure jauge
21 – Electrical box
22 – Overheat safety device
23 - Fan
24 – Fumes box
25 – Flue pipe
26 - By-pass
27 – Non return valve
28 – Gas tap
29 – Heating return tap
30 – Heating flow tap
31 – Water service tap
32 – DHW expansion kit

15. COMMISSIONING

MTS (GB) Limited support the benchmark initiative. Within the information pack you will find a copy of the benchmark Log Book. It is important that this is completed in the presence of your customer, they are shown how to use it, and it is signed by them. Please instruct your customer that they must have their benchmark Log Book with them whenever they contact a service engineer or us.

15.1 Initial Preparation

Preliminary electrical system checks to ensure electrical safety must be carried out by a competent person i.e. polarity, earth continuity, resistance to earth and short circuit.

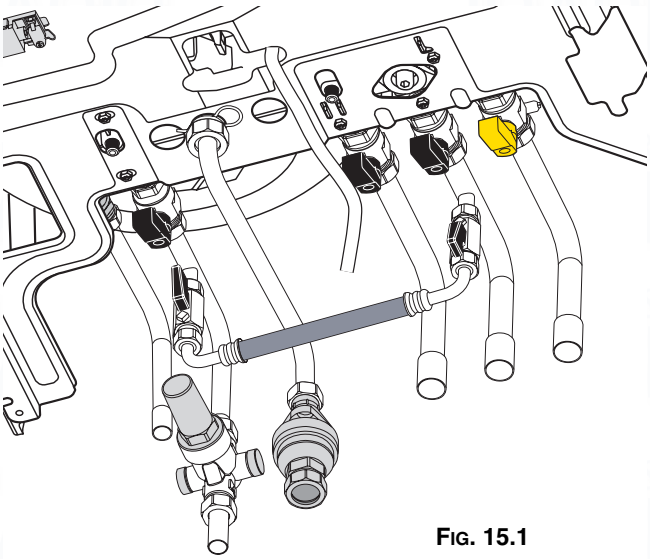

FIG. 15.1

FILLING THE HEATING SYSTEM:

Lower the control panel and remove the case panels (see **SECTION 15.3** for further information).

Open the central heating flow and return cocks supplied with the connection kit.
Unscrew the cap on the automatic air release valve one full turn and leave open permanently.
Close all air release valves on the central heating system.
Gradually open valve(s) at the filling point (filling-loop) connection to the central heating system until water is heard to flow, do not open fully.
Open each air release tap starting with the lowest point and close them only when clear water, free of air, is visible.

Purge the air from the pump by unscrewing the pump plug anticlockwise, also manually rotate the pump shaft in the direction indicated by the pump label to ensure the pump is free.

Refit the pump plug.
Continue filling the system until at least 1.5 bar registers on the pressure gauge.
Inspect the system for water soundness and remedy any leaks discovered.

FILLING OF THE D.H.W. SYSTEM:

Close all hot water draw-off taps.
Open the cold water inlet cock supplied with the connection kit.
Open slowly each draw-off tap and close them only when clear water, free of bubbles, is visible.

GAS SUPPLY:

Inspect the entire installation including the gas meter and test for soundness. The gas installation should be in accordance with the relevant standards. In GB this is BS6891 and in IE this is the current edition of I.S.813.

The connection to the appliance is a 15 mm copper tail located at the rear of the gas service cock (Fig. 10.3).

If the gas supply for the boiler serves other appliances ensure that an adequate supply is available both to the boiler and the other appliances when they are in use at the same time.

Pipe work must be of an adequate size. Pipes less than the 22 mm should not be used.
Open the gas cock (supplied with the connection kit) to the appliance and check the gas connections on the appliance for leaks.

When the installation and filling are completed, flush the system while cold, refill, turn on the Central Heating system (**SECTION 3**) and run it until the temperature has reached the boiler operating temperature.

The system must then be immediately flushed through.

The flushing procedure must be in line with BS 7593:1992 code of practice for treatment of water in domestic hot water central heating systems.

During this operation, we highly recommend the use of a central heating flushing detergent (Fernox Superfloc or equivalent), whose function is to dissolve any foreign matter that may be in the system.

Substances different from these could create serious problems to the pump or other components.

The use of an inhibitor in the system such as Fernox MB-1 or equivalent is strongly recommended to prevent corrosion (*sludge*) damaging the boiler and system, following the flushing procedure..

Failure to carry out this procedure may invalidate the appliance warranty.

15.2 Completion

For IE it is necessary to complete a “Declaration of Conformity” to indicate compliance to I.S.813. An example of this is given in the current edition of I.S.813. In addition it is necessary to complete the “Benchmark” Log Book.

15.3 Removal and fitting of the case Servicing

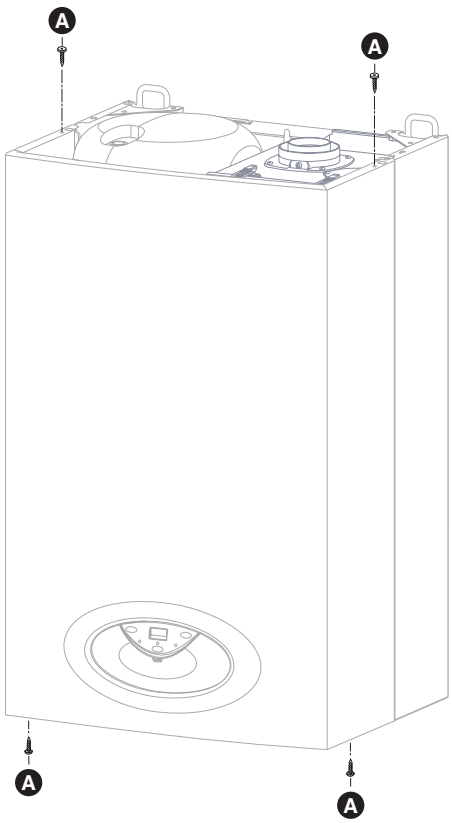

FIG. 15.2

Removal of the case

- undo the 4 case retaining screws (Fig. 15.2)
- disengage the clips
- remove the case

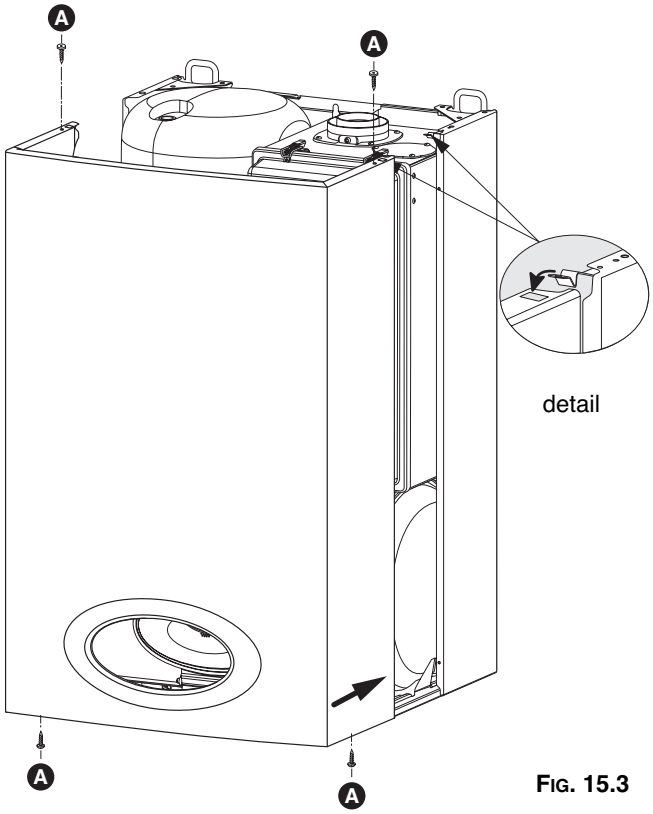

FIG. 15.3

Fitting the case

Remove the protective film from the front and rear of the case

- position the case (Fig. 15.3)
- engage both clips in the case (see detail)
- fasten the 4 retaining screws **A** on the front

Servicing

To maintain the unit, it is possible to move the electrical box without having to disconnect it. The electrical box is clipped onto the heating outlet pipe or onto the bottom of the chassis. (Fig. 15.4)

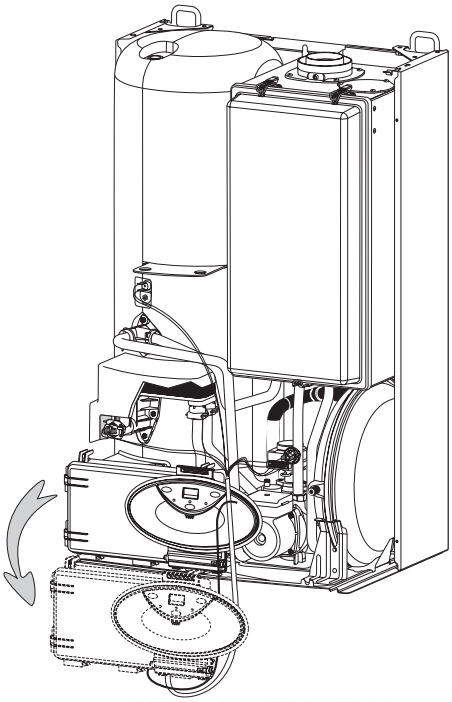

FIG. 15.4

15.4 Pressurisation

(fig. 15.5)

Domestic hot water circuit

- open cold water tap **40**
- drain the hot water tank and appliance by drawing off from the various hot water taps.

Heating circuit

- check that the heating outlet tap **41** and heating return tap **42** are fully open
- open the filling taps **43** and **44**
- close these taps when the needle of the pressure gauge **37** (under the door of the electrical unit cover) reaches the pressure set in § 3
- drain the appliance and re-establish the pressure

Gas circuit

- open the gas tap **39**
- flush the gas circuit
- check the sealing over the whole gas circuit

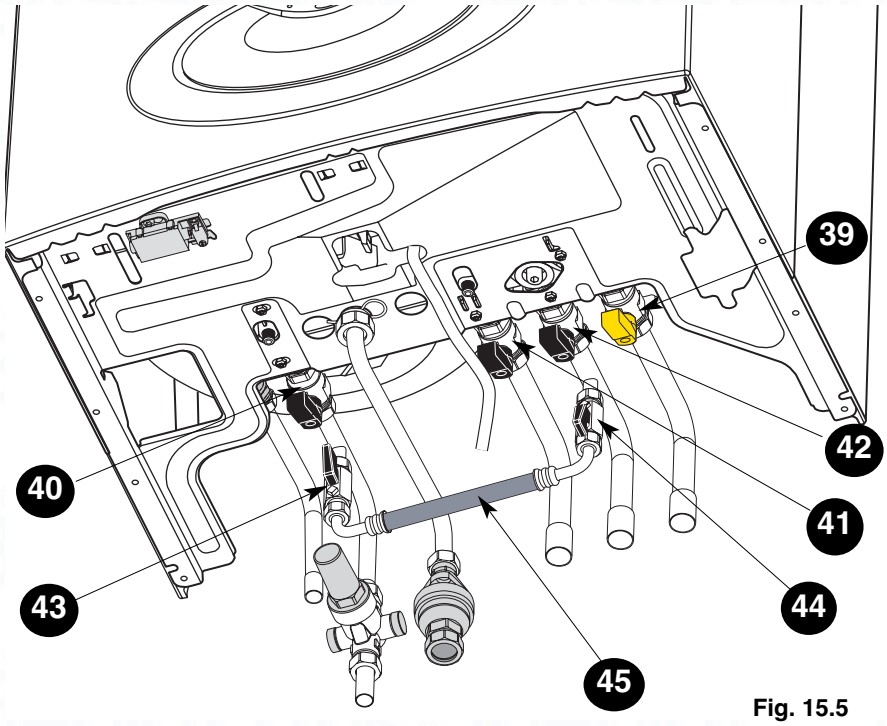

Fig. 15.5

WARNING : It is very important to fully bleed the main heat exchanger of air when filling the boiler.
You must continue to bleed the heat exchanger from pump through the automatic air vent, through several central heating and hot water cycles to ensure the air is fully bled from the system.
Refer to the installation manual for detailed guidance.
Failure to adequately bleed the boiler may damage the appliance and invalidate the warranty.

15.5 Commissioning

(fig. 15.6)

- press the on/off button (ON/OFF) **26** on the control panel and turn selector **32** to the "winter" operating mode. The boiler pump will start up and three attempts will be made to ignite the burner (display ***S01***, then ***S02***. After the third attempt, the electronic control unit will shut the appliance down as the gas supply has been cut off; the warning light **30** comes on and "***A01***" appears on the display.
- leave the pump running until all the air has been exhausted from the appliance.
- bleed the air from the radiators
- open the Domestic hot water circuit to eliminate all the air from it
- check the appliance pressure, and if it has fallen, add water to bring it back to 1 bar.
- check the exhaust gas evacuation duct.
- check that the ventilator inlets for the room are fully open (type B appliances).

6. Reset the boiler by pressing the button (RESET) **27**.
The burner comes on. If the first attempt fails, the gas pipe must be purged;
repeat the operation until the burner ignites.

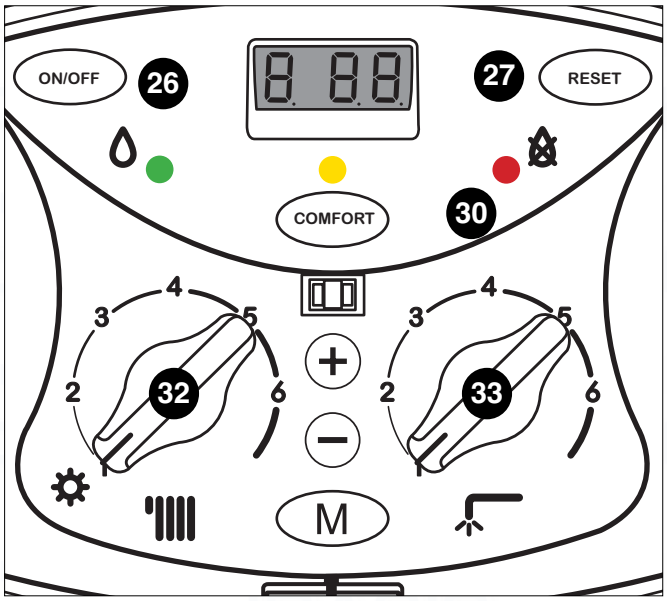

Fig. 15.6

15.6 Settings

Display: display of operations in progress (fig. 15.7)
During operation of the boiler, in other words when it is performing its normal functions, the left side of the display shows a series of characters referring to the operations, as indicated below:

O No heat command
C Heating
c Pump in post-circulation mode for heating
d Domestic hot water
h Pump in post-circulation mode for Domestic hot water
b Tank reheating

On the right, the display shows (2 characters):
- in heating mode: heating appliance output temperature
- in Domestic hot water distribution mode: drawing-off temperature.
- in tank reheating mode: tank temperature.

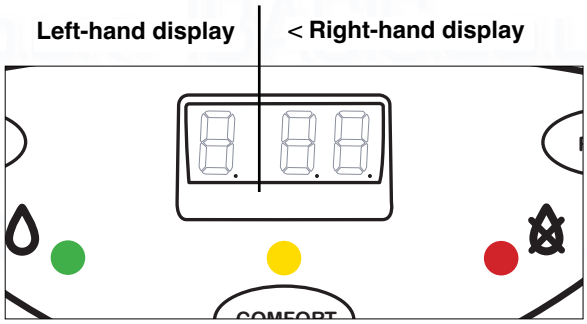

Fig. 15.7

The appliance is preset in the factory. The preset factory settings are given in the menu table.
All the settings can be changed by the installer or a qualified professional.
The settings and information on the boiler are accessible by tilting door **P** of the electrical unit (fig. 15.8).

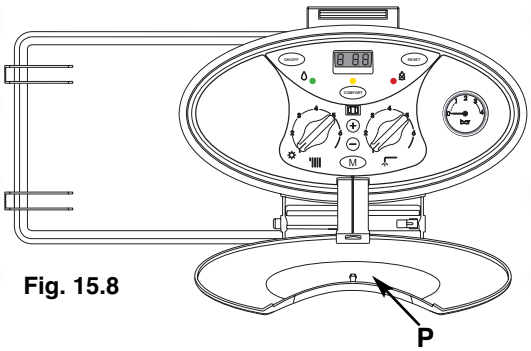

Fig. 15.8

Operating adjustment (fig. 15.9)
The boiler has been designed to simplify the setting of the operating parameters.

Adjustment menu
To access the adjustment menu, first press the Reset button (RESET) **27** and, holding it down, press the Menu button (M) **36** for 5 seconds.
By pressing the Reset button again, the screen will display the parameters shown in the menu table.
To change the parameters, use the (−) and (+) programming buttons.

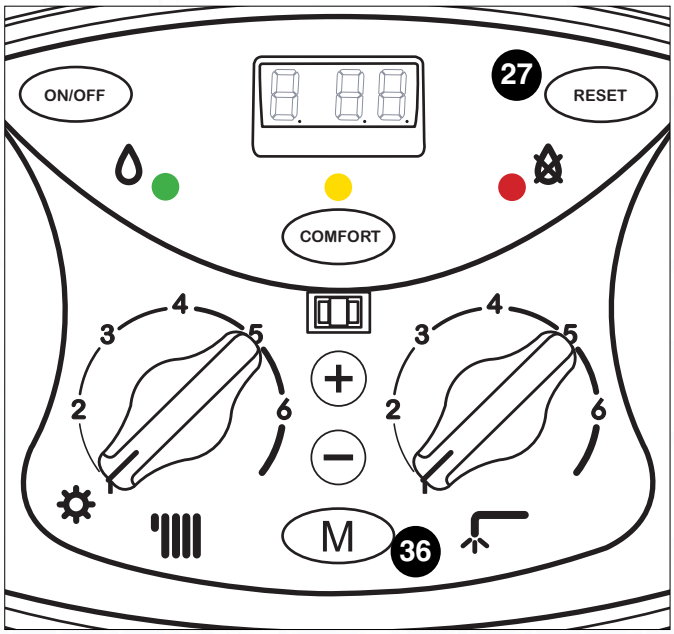

Fig. 15.9

MENU TABLE

Parameter	Function	Adjustment range	Factory settings
1	Ignition power as %	**00** to **99 %** (step: 1%)	**55** Consult the manufacturer before changing this parameter
2	Maximum heating power (%)	**00** to **99 %** (step: 1%)	**66**
3	Anti-cycle timer (minutes)	**00** to **07 minutes** (step: 1 minute)	**02**
4	Minimum heating outlet temperature	25° to 42 °C if parameter **r** = 00 42° to 81 °C if parameter **r** = 01	**42**
5	Maximum heating outlet temperature	26° to 75 °C if parameter **r** = 00 43° to 82 °C if parameter **r** = 01	**82**
6	Not used	**00** to **99**	**45**
tS	E@sy remote surveillance	**0** or **1**	**0** Do not alter if the E@sy system is not connected
F	Type of boiler	**00** to **03**	**03 do not alter (boiler with tank)**
E	External actuator (depending on system)	**00** to **03**	**00 do not alter**
P	Post-circulation with pump in heating mode	from **01** to **15 minutes or C0**	**02**
C	Activation/deactivation of Domestic hot water function	**00** or **01**	**00**
PU	Pump speed control	**U0** or **U1**	**U1**
r	Heating setpoint range	**00** or **01**	**01**
P	Temperature control by external sensor	**90** or **91**	**90**
P6	Gradient shift	- **20** to + **20 °C**	**0**
P5	Gradient adjustment	**0_1** to **5_0**	**0_9**
T	Test function		Not used
A	Not used		
b0	Second zone set-point	**25** to **82**	**75**
b1	Not used		
b2	Post Domestic hot water timer in minutes	**00** to **30**	**00**
b3	Not used		
b4	Programmer action	**0** to **2** **0** on heating and tank reheating **1** on tank reheating **2** on heating	**0**
b5	Not used		
b7	Not used		
b8	Not used		

Important!! The parameters **P5**, **P6** and **P9** are only activated if the external sensor is connected.

To return to the standard displays, press the Menu button.

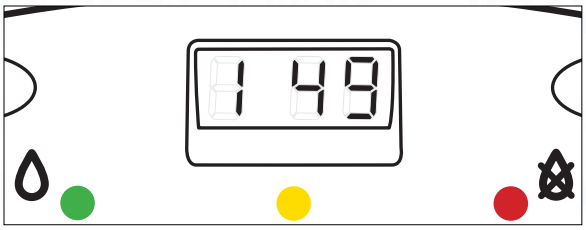

Ignition power output setting *1*
This parameter limits the power of the boiler in the ignition phase.
Possibility of adjusting ignition between maximum power (display of "99", i.e. 100%) and minimum power (display of "00", i.e. 0%).
The percentage expresses the usable power value between the minimum and maximum power value.
Use the ⊖ and ⊕ buttons in menu **1** to select the required value.
The factory-set value is given in the menu table.

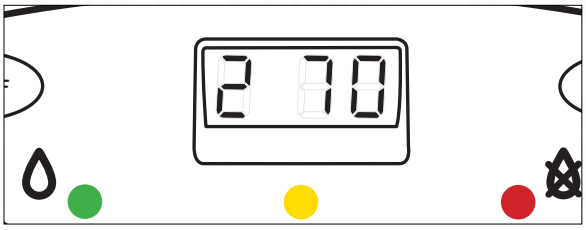

Maximum heating power regulation *2*
This parameter limits the power of the boiler in the heating phase.
The percentage expresses the power value between the minimum and maximum power value.
Use the ⊖ and ⊕ buttons in menu **2** to select the required value.
The factory-set value is given in the menu table.

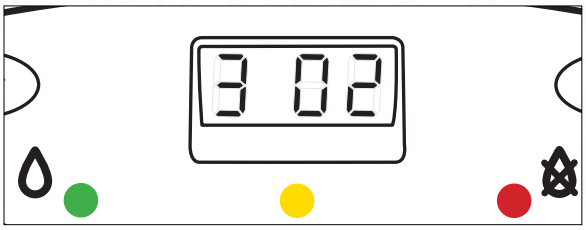

Anti-cycle timer *3*
This parameter sets the delay between 2 successive burner ignitions in heating mode.
It is possible to select an ignition delay of between 1 and 7 minutes.
Use the ⊖ and ⊕ buttons in menu **3** to select the required value.
The factory-set value is given in the menu table.

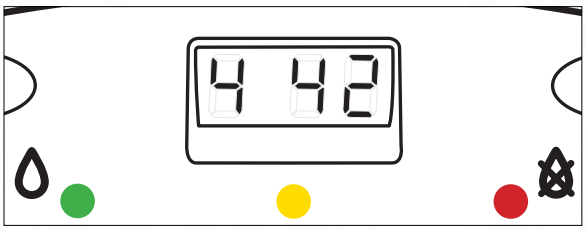

Minimum heating outlet temperature *4*
This parameter sets the minimum heating outlet temperature in relation to **r**.
Use the ⊖ and ⊕ buttons in menu **4** to select the required value.
The factory-set value is given in the menu table.

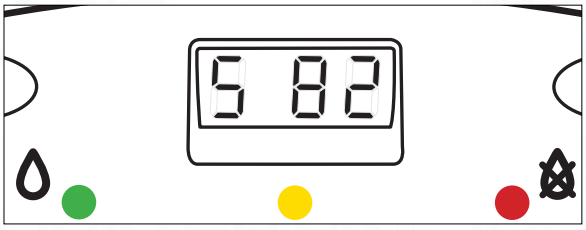

Maximum heating outlet temperature *5*
This parameter sets the maximum heating outlet temperature in relation to **r**.
Use the ⊖ and ⊕ buttons in menu **5** to select the required value.
The factory-set value is given in the menu table.

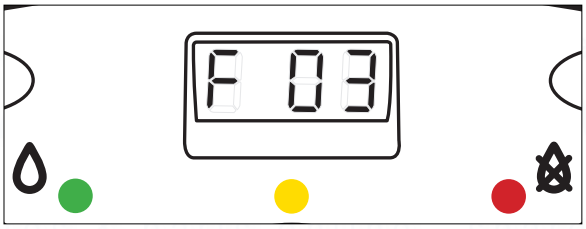

Selection of boiler type *F*
Pre-set in factory:
This parameter must not be altered.

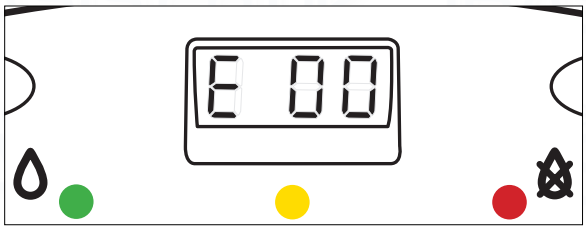

Selection of Secondary Output operation*E*
Only activated if peripheral interface card connected (option)
For connection of peripherals to the motherboard, refer to the user instructions for the Clima Manager or the external sensor. Parameter E is altered by the ⊖ and ⊕ programming buttons.
00 Zone valve - factory setting
01 NOT USED
02 NOT USED
03 NOT USED

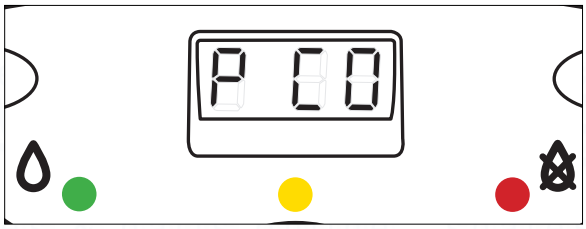

Circulation pump post-circulation*P*
The appliance allows variation of the post-circulation period of the circulation pump after extinction of the burner. Adjustable from 1 to 15 minutes or continuous (***C0***).
Use the ⊖ and ⊕ buttons in menu **P** to select the required value.
The factory-set value is given in the menu table.

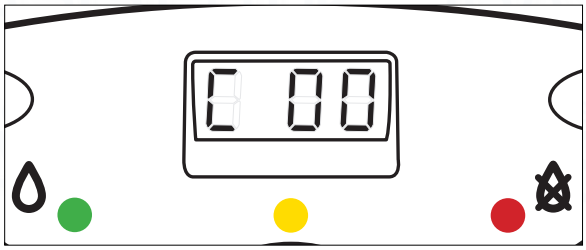

Comfort Function : activation/deactivation of the Domestic hot water and tank reheating functions*C*
00 Domestic hot water and tank reheating functions deactivated
01 Domestic hot water and tank reheating functions activated
When the function is activated, the yellow indicator light **31** comes on.
To deactivate the **Comfort** function, press the COMFORT button.
The yellow indicator light **31** goes out.
Use the ⊖ and ⊕ buttons in menu **C** to select the required value.
The factory-set value is given in the menu table.

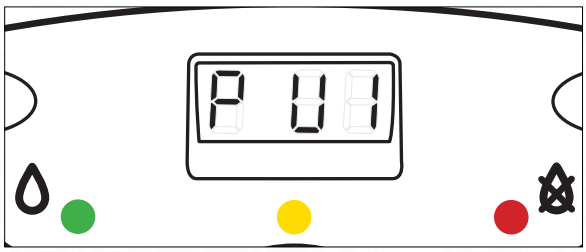

Circulation pump speed*P*
U0 - Fixed speed operation
U1 - Variable speed operation
Use the ⊖ and ⊕ buttons in menu **P** to select the required value.
The factory-set value is given in the menu table.

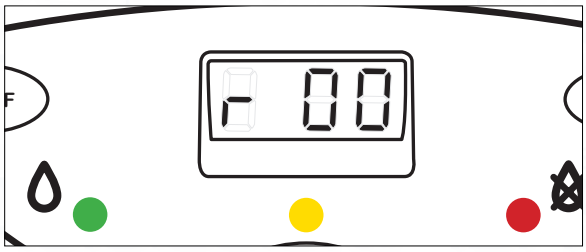

Heating temperature range setting*r*
00 - possibility of adjusting the temperature from 25°C to x in menu **4**
possibility of adjusting the temperature from x+1 to 75°C in menu **5**
where x ≤ 44 °C
01 - possibility of adjusting the temperature from 42°C to y in menu **4**
- possibility of adjusting the temperature from y+1 to 82°C in menu **5**
where y ≤ 81 °C
Use the ⊖ and ⊕ buttons in menu **r** to select the required value.
The factory-set value is given in the menu table.

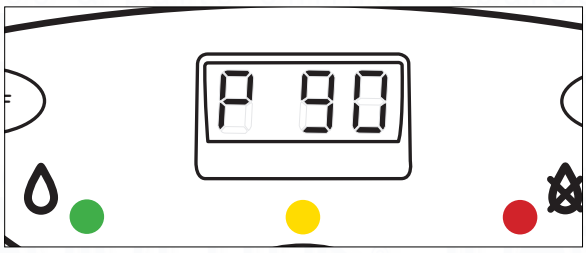

Temperature control by external sensor*P*
(Only activated if the external sensor is installed)
"***90***" Temperature adjustment by external sensor deactivated (external sensor not installed).
"***91***" Temperature adjustment by external sensor activated (external sensor installed).
Use the ⊖ and ⊕ buttons in menu **P** to select the required value.
The factory-set value is given in the menu table.

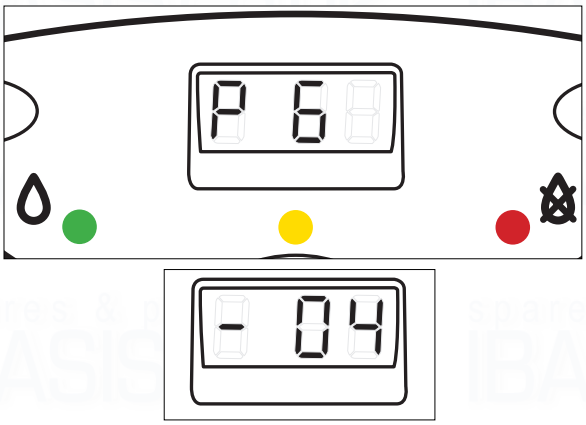

Adaptation of the selected thermal curve*P 6*

(Only activated if the external sensor is installed)

To adapt the thermal curve to the appliance requirements, by selecting the ***P 6*** parameter it is possible to perform a parallel shift of the curve in order to alter the calculated outlet temperature and therefore the environmental temperature.

When the screen displays ***P 6***, by using the heating setting button it is possible to perform a parallel shift of the curve as shown below. The shift value between -20 and +20 is shown on the display.

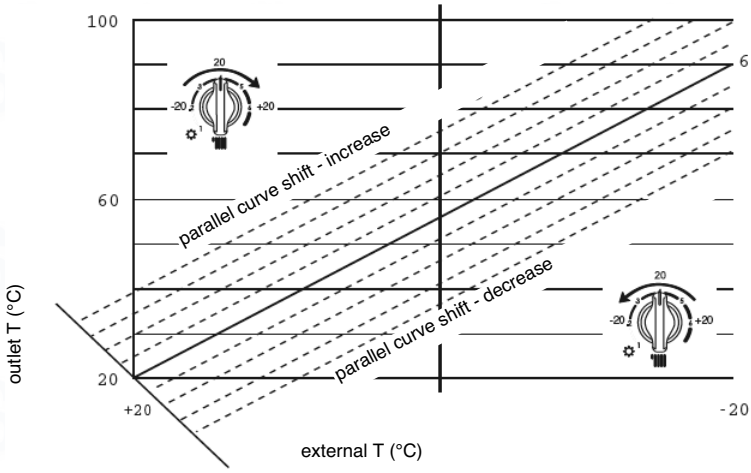

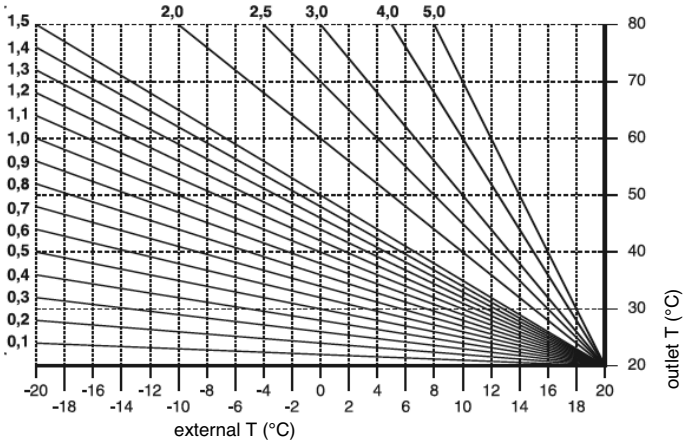

Selection of thermal curves*P 5*

(Only activated if the external sensor is installed)

If the external sensor is used, the microprocessor calculates the most suitable heating outlet temperature taking the external temperature and the type of installation into account. The microprocessor can do this because it is possible to establish a link between the external temperature and the outlet temperature of the water. This link is expressed by a "thermal curve".

The type of curve must be chosen according to the type of appliance and the heat losses present in the building.

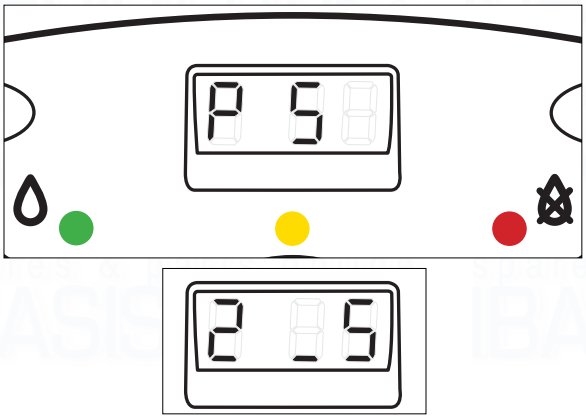

The screen first displays the ***P 5*** parameter, then the curve selected. To change the curve selection, use the ⊖ and ⊕ programming buttons.

Note:

If the choice of curves is made using the Clima Manager remote control, the available values are limited. Please refer to the remote control user instructions.

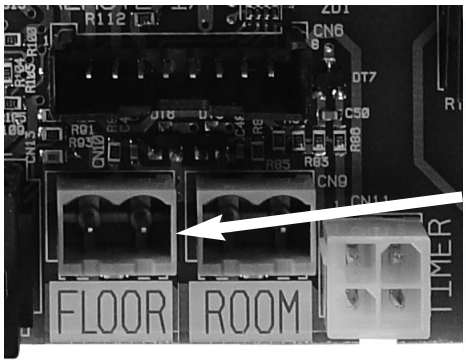

Important

When selecting a curve for low-temperature appliances, it is vitally important to connect an overheat safety device to the base output which will be connected to the Flora room thermostat connector on the boiler PCB.

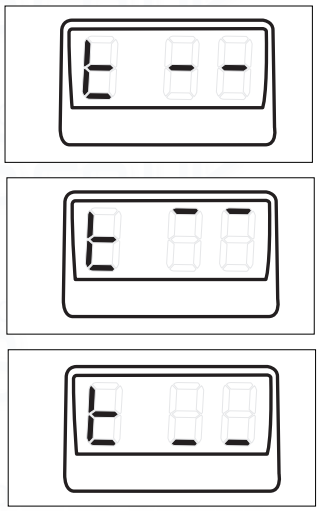

Test function *T*

The boiler can be turned to maximum or minimum power without activating the test function by using the settings menu:

a - press the reset button (RESET) for 5 seconds to automatically turn the boiler to its maximum power; the screen will display two dashes in the middle and to the right of the screen. To deactivate this function press the (RESET) button again.

b - press the (−) and (+) buttons simultaneously to turn the boiler to its maximum Domestic hot water power; the screen will display two dashes at the top and to the right of the screen. To deactivate this function press the (RESET) button again.

c - press the (−) button to turn the boiler to minimum power; the screen will display two dashes at the bottom and to the right of the screen. To deactivate this function press the RESET button again.

To deactivate this function press the (RESET) button again.

Selection display

The boiler is designed to operate according to function and setting variables using the control panel display. Press the (M) Menu button for 10 seconds to access the function allowing you to read the main system variables. Press the (RESET) button continuously to read the following information in sequence:

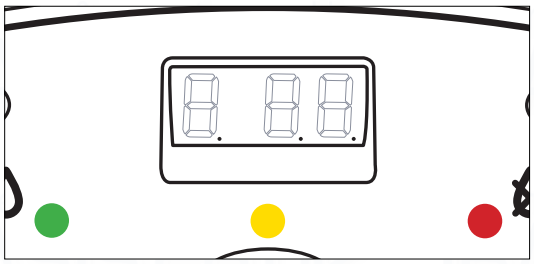

Value shown on the left-hand display	Value shown on right-hand display
U/1	Heating outlet temperature (°C)
U/2	Return temperature (°C)
U/3	Domestic hot water drawing off temperature (°C)
U/4	External temperature (°C)
U/5	Tank temperature (°C)
U/6	Fan rotation speed (Value X 100 rpm)
U/7	NOT USED
E	Last safety shutdown
A	Last operating stoppage

To return to the standard displays, press the (M) Menu button.
The boiler will automatically return to the standard displays after 2 minutes.

Note 1:
U/1(U/2.....) indicates that the display alternately displays U and 1 (U and 2, etc.)

Note 2:
the value 100% is displayed as "00".

* only with external sensor connected

15.7 Operating faults

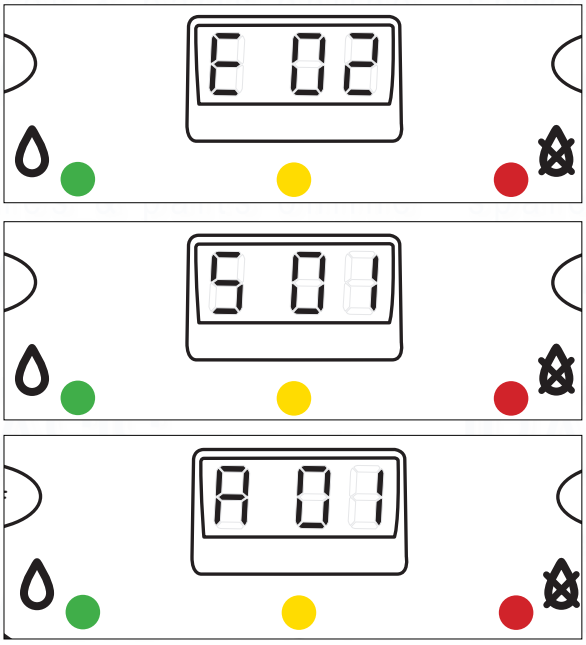

The boiler is protected against the risk of breakdown by internal checks carried out by the microprocessor which, if necessary, will activate a safety shutdown.
If the appliance stops working, the screen will display a code corresponding to the type of stoppage and its cause.
There are two types of stoppage:
- ***SAFETY SHUTDOWN***: this type of fault (indicated on the display by the letters ***"E"*** or ***"S"***) is of the "VOLATILE" type, in other words it is automatically cleared when its cause ceases.
As soon as the cause of the stoppage disappears, the appliance will restart and resume normal operation. While the boiler is in safety shutdown mode, it is possible to attempt to restore operation by switching it off and then on again.
- ***OPERATING STOPPAGE***: this type of fault is called "NON VOLATILE" (indicated on the display by the letter ***"A"***) and in this case, the appliance does not automatically restart.
To reset the boiler, press the RESET key **27**. If, after several attempts to reset, the appliance stops again, call a qualified technician.
The following is a list of the stoppage types and the corresponding codes displayed on the screen.

Display	CAUSE
A01	*Three ignition attempts*
A03	*The output temperature exceeds 105°C during operation*
A07	*Too many flame separations over a period during operation*
A17	*Input water circulation fault*
A18	*No water circulation*
A33	*Fan problem*
A97	*Electronic control problem*
A98	*Electronic control problem*
A99	*Electronic control problem*

N.B.: In the case of an ignition fault, check that the gas tap is open.

IMPORTANT
If this type of failure occurs too often, call an approved after sales technical service. For safety reasons, the boiler will only allow 5 reignition attempts in 15 minutes (pressing of the RESET button). After the fifth attempt, the boiler goes into safety shutdown mode ***E 99***.
No problem in the case of sporadic or isolated stoppages.

Display	CAUSE
S 01	*Flame not detected on first attempt*
S 02	*Flame not detected on second attempt*
S 04	*Open circuit on Domestic hot water sensor*
S 05	*Short circuit on Domestic hot water sensor*
S 06	*Flame separation*
S 25	*Tank sensor open*
S 26	*Tank sensor short circuit*
S 27	*Tank overheating*
S 30	*External sensor open circuit*
S 31	*External sensor short circuit*
S 80	*Open circuit or short circuit on room sensor of the Clima Manager remote control*

Display	CAUSE
E 02	*Insufficient water pressure*
E 06	*Open circuit on heating outlet sensor*
E 07	*Short circuit on heating outlet sensor*
E 08	*Open circuit on heating return sensor*
E 09	*Short circuit on heating return sensor*
E 10	*Contact open in the floor overheat safety device circuit (Flora room thermostat)*
E 20	*False flame detection with gas valve closed*
E 94	*Electronic control problem*
E 95	*Read error in heating outlet and return sensors*
E 99	*5 resets in less than 15 minutes. Resetting by a boiler ON/OFF operation*

Antilocking of pump and three-way valve
To prevent locking of the components, the appliance performs a self-test every 24 hours: the pump starts up for 3 seconds and the diverting valve is operated.

Frost protection
The boiler is fitted with an anti-freeze device, which checks the heating outlet temperature of the boiler: if this temperature falls below 8°C, the pump starts up (circulation within the heating appliance) and runs for 2 minutes.
After two minutes' circulation, the microprocessor carries out the following check:
a - if the outlet temperature is > 8°C, the pump stops;
b - if the outlet temperature is > 3°C and < 8°C the pump continues for a further 2 minutes;
c - if the outlet temperature is < 3°C, the burner is ignited (in heating mode at minimum power) until a temperature of 33°C is reached. Once this temperature is reached, the burner switches off and the circulation pump continues to operate for a further two minutes.
It is possible to cause the pump to operate continuously using parameter **P** in the settings menu (see menu table).
The antifreeze protection is only activated if the boiler is in perfect working order,
in other words:
- the appliance water pressure is sufficient;
- the boiler is receiving an electrical supply;
- gas is being supplied.

16. GAS CONVERSION

In the event of converting to a gas type other than that for which the boiler has been designed, the parts delivered with the conversion kit must be fitted.

17. MAINTENANCE

It is recommended that the following checks be made on the boiler at least once a year:

1 - Check the seals for the water connections; replacement of any faulty seals.
2 - Check the gas seals; replacement of any faulty gas seals.
3 - Visual check of the entire unit.
4 - Visual check of the combustion process and cleaning of the burners if needed.
5 - If called for by check no. 3, dismantling and cleaning of the combustion chamber.
6 - If called for by check no. 4, dismantling and cleaning of the injectors.
7 - Visual check of the primary heat exchanger:
- check for overheating in the blade assembly;
- clean the exhaust fan if needed.

8 - Adjustment of the flow rate of the gas: flow rate for lighting, partial load § and full load.
9 - Check of the heating safety systems:
- safety device for maximum temperature;
- safety device for maximum pressure.

10 - Check of the gas safety systems:
- safety device for lack of gas or flame ionisation (detection electrode);
- safety device for gas cock.

11 - Check of the electrical connection (make sure it complies with the instructions in the manual).
12 - Check of domestic hot water production efficiency (delivery rate and temperature)
13 - Check pressure in the Domestic Expansion Vessel and top up as necessary.
14 - Check manually by turning the test knob of the Temperature & Pressure Relief Valve.
15 - Check manually by turning the test knob the Expansion Relief Valve.
16 - Check discharge pipes from both the central heating and domestic hot water for obstructions.
17 - Check of the general performance of the unit.
18 - General check of the discharge/ventilation of the combustion by products.

NOTE: THESE CHECKS ARE NOT EXHAUSTIVE

18. Servicing Instructions

To ensure efficient safe operation, it is recommended that the boiler is serviced annually by a competent person.

Before starting any servicing work, ensure both the gas and electrical supplies to the boiler are isolated and the boiler is cool.
Before and after servicing, a combustion analysis should be made via the flue sampling point (please refer to Section 15.8).

After servicing, preliminary electrical system checks must be carried out to ensure electrical safety (i.e. polarity, earth continuity, resistance to earth and short circuit).

Fig. 18.1

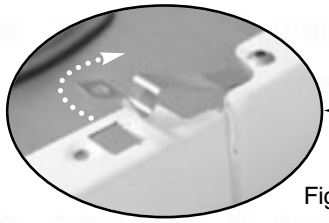
Fig.18.2

18.1 Replacement of Parts

The life of individual components vary and they will need servicing or replacing as and when faults develop.
The fault finding sequence chart in Section 19 will help to locate which component is the cause of any malfunction, and instructions for removal, inspection and replacement of the individual parts are given in the following pages.

18.2 To Gain General Access

All testing and maintenance operations on the boiler require the control panel to be lowered. This will also require the removal of the casing.

18.2.1 Removing the front panel

1. Remove the 4 retaining screws "**A**" (see Fig. 18.1);
2. Disengage the 2 clips (see Fig. 18.2);
3. Remove the front panel from the rest of the casing (see Fig. 18.3).
4. Reassemble in reverse order.

Fig. 18.3

18.2.2 Removing the control panel

1. Remove the front panel as above;
2. Pull the control panel toward you to disengage it from the bottom of the chassis (see Fig. 18.4);
3. Clip the top of the control panel onto the bottom of the chassis. (see Fig. 18.5);
4. Reassemble in reverse order.

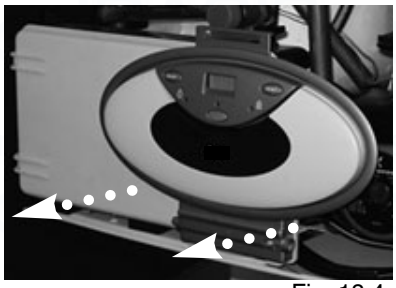
Fig. 18.4

Fig. 18.5

18.3 Access to the Control System

18.3.1 Removing the main P.C.B.

1. Isolate electricity and carry out step ***18.2.1*** ;
2. Open the control box by pushing on the 2 right clips "**B1**" (see Fig. 18.6);
3. Push on the pressure gauge to disengage it;
4. Disconnect as possible the connectors on the P.C.B. ;
5. Compress the three peripheral plastic parts "**B2**" to unlock the fitting P.C.B. , and pull it toward you simultaneously (see Fig. 18.7);
6. Disconnect the remaining connectors (see Fig. 18.8);
7. Reassemble in reverse order.

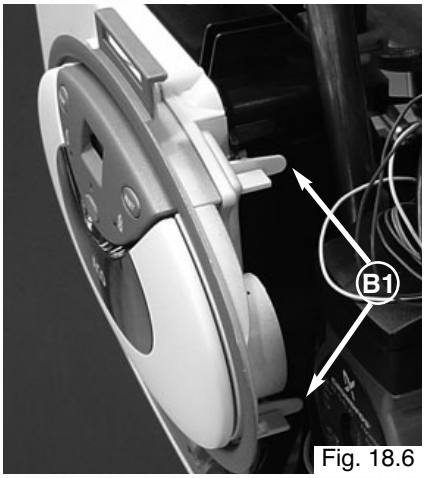

Fig. 18.6

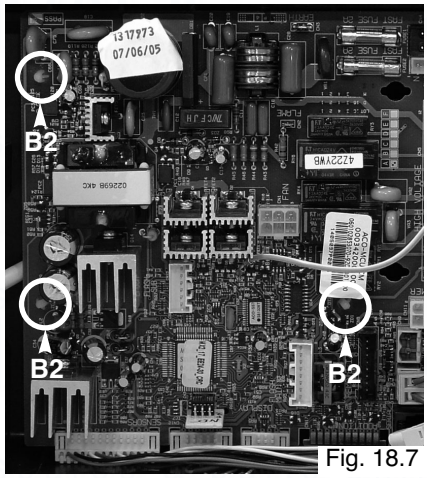

Fig. 18.7

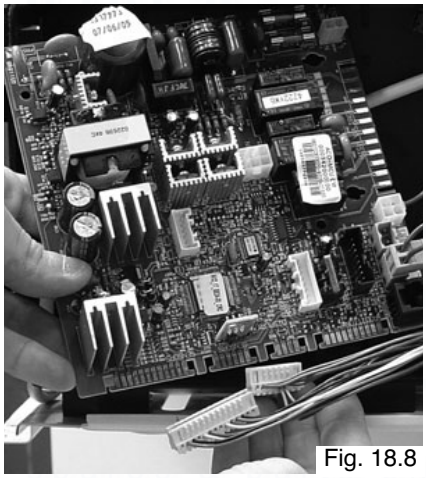
Fig. 18.8

18.3.2 Removing the display P.C.B.

1. Isolate electricity and carry out step ***18.2.1***;
2. Open the control box as above (see Fig. 18.6);
3. Remove the three screws on the control box (see Fig. 18.9);
4. Remove the four screws on the P.C.B., then pull the card toward you and remove the connector (see Fig. 18.10);

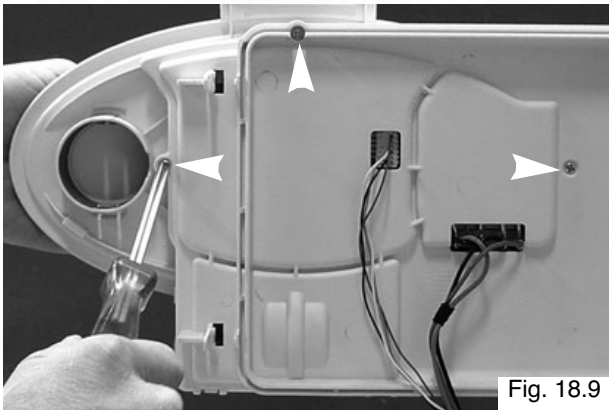
Fig. 18.9

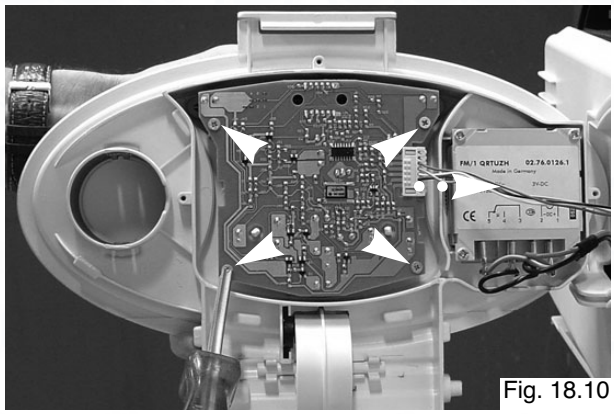
Fig. 18.10

5. Reassemble in reverse order and carry out the good positioning on the control box (see Fig. 18.11).

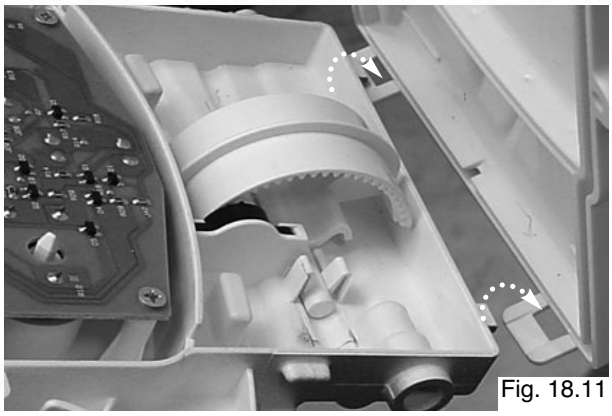
Fig. 18.11

18.3.3 Removing the fuses

1. Isolate electricity and carry out step ***18.2.1***;
2. Open the control box as in step ***18.3.1*** (see Fig. 18.6);
3. Remove the fuses "**C**" (see Fig.18.12);
4. Reassemble in reverse order.

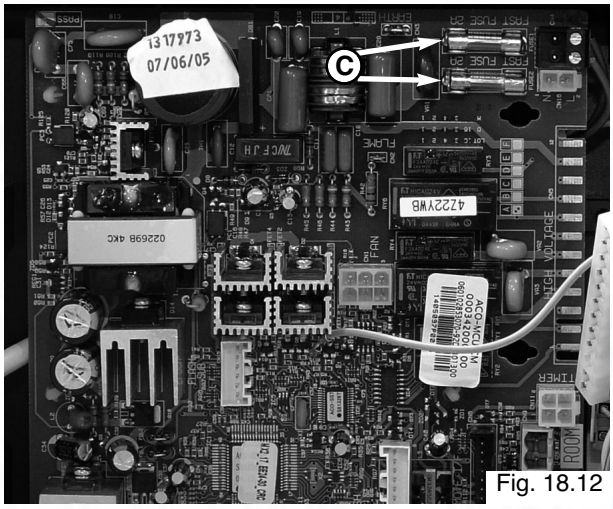

Fig. 18.12

18.3.4 Removing the time clock

To fit the integral time clock it is necessary to proceed as follows; (this should only be carried out by a competent engineer)

1. Isolate the electrical supply to the appliance;
2. Remove the front panel as described in step ***18.2.1***;
3. Open the electrical box as in step ***18.3.1*** and remove the plastic cover as in step ***18.3.2*** (see Fig. 18.13) ;
4. Pull out the wires;

NOTE: THE WIRES MAY BE TUCKED BEHIND THE ELECTRICAL COVER.

5. Connect the time clock wires as follows and reassemble in reverse order.

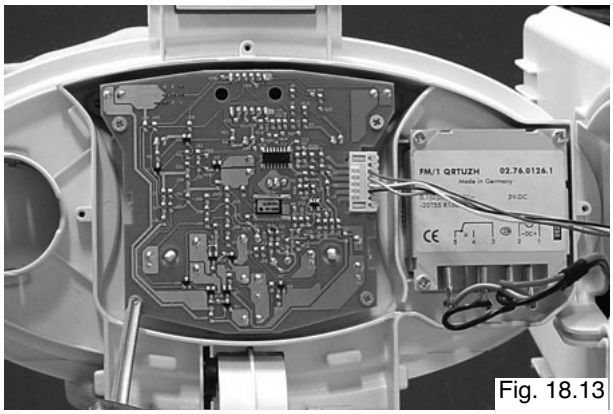
Fig. 18.13

MECHANICAL MODEL (Fig. 18.14)

Red Wire	-	Contact 1
Black Wire	-	Contact 2
Black Wire	-	Contact 3
Grey Wire	-	Contact 5

NOTE: THE TWO BLACK WIRES ON CONTACTS 2 & 3 CAN BE REVERSED

DIGITAL MODEL (Fig. 18.15)

Red Wire	-	Contact 1
Black Wire	-	Contact 2
Grey Wire	-	Contact 3

NOTE: SECOND BLACK WIRE IS NOT CONNECTED.

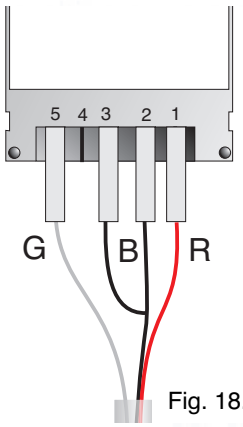

Fig. 18.14

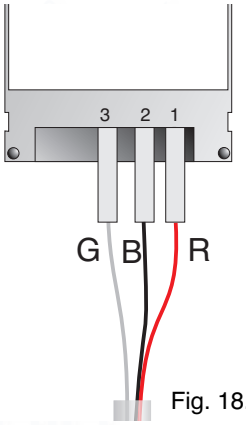

Fig. 18.15

18.4 Access to the Combustion Chamber

18.4.1 Removing the combustion chamber front panel

1. Carry out step ***18.2.1***;
2. Unlock the three clamp locking bolts "**D**" and remove the casing (see Figs. 18.16 and 18.17);
3. Reassemble in reverse order.

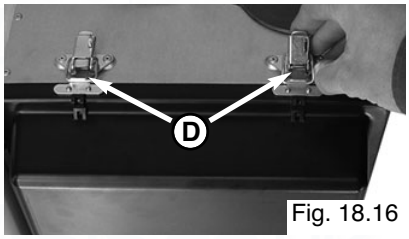

Fig. 18.16

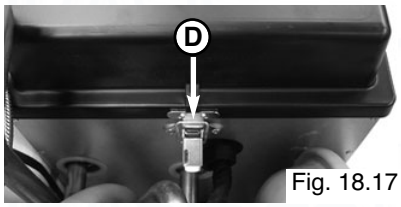

Fig. 18.17

18.4.2 Removing the air gas assembly

1. Isolate the gas supply to the boiler;
2. Carry out step **18.2.1**;
3. Remove the silencer (Fig. 18.18);
4. Disconnect the detection electrode cable (Fig. 18.19);
5. Remove the earth cable from the ignition electrode (Fig. 18.20), and remove the ignition electrode cable from the ignitor (Fig. 18.21)

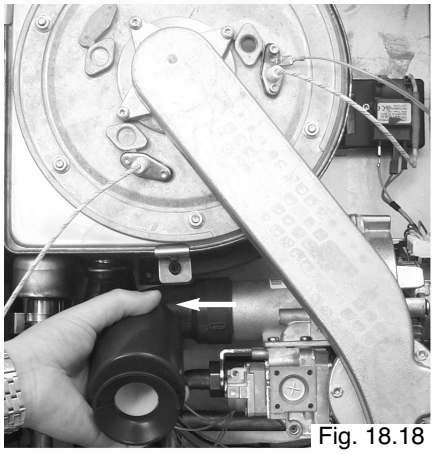
Fig. 18.18

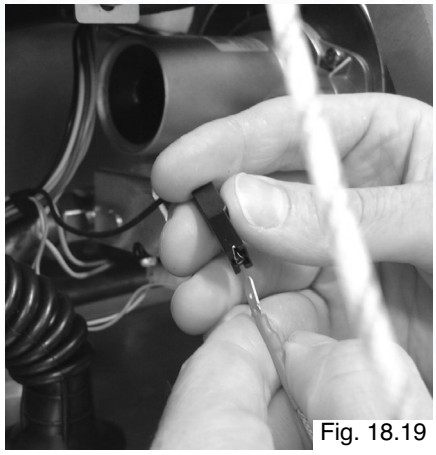
Fig. 18.19

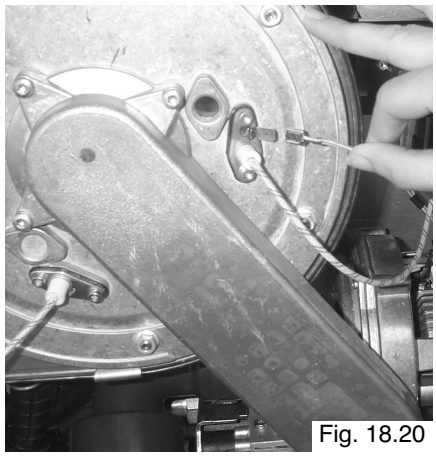
Fig. 18.20

6. Unplug the gas valve and fan connectors (Figs. 18.22 and 18.23);

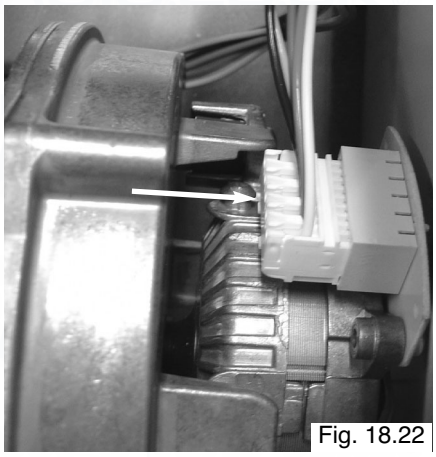
Fig. 18.22

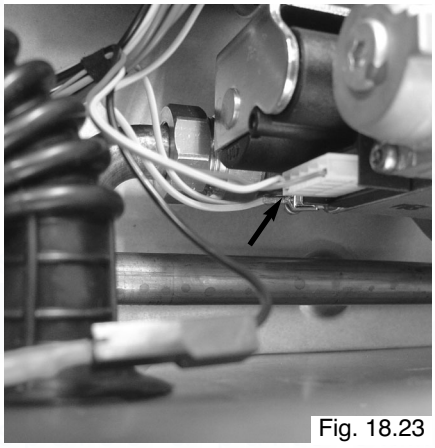
Fig. 18.23

Fig. 18.21

7. Unscrew the 6 nuts "**E1**" on the combustion chamber (Fig. 18.24);
8. Unscrew the gas valve nut "**E2**" (Fig. 18.25);
9. Remove the air gas assembly and combustion chamber front (Fig. 18.26);
10. Reassemble in reverse order.

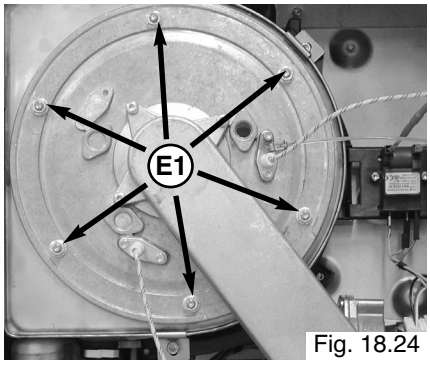

Fig. 18.24

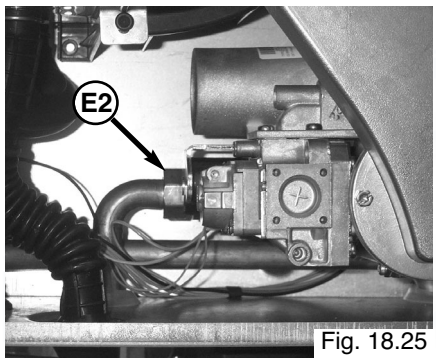

Fig. 18.25

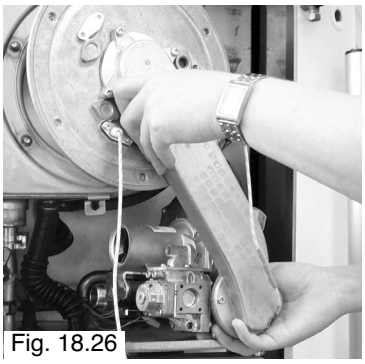
Fig. 18.26

18.4.3 Removing the burner

1. Carry out step ***18.2.1*** and ***18.4.1***;
2. Remove the 3 screws "**F**" from the air/gas manifold (Fig. 18.27)*;*

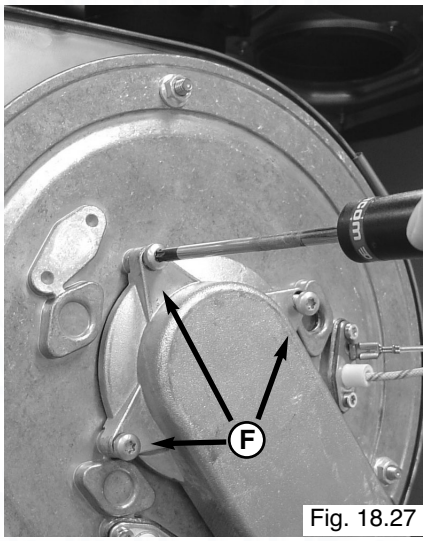

Fig. 18.27

3. Slide the burner out from the front, taking care not to damage the insulation (Fig. 18.28);

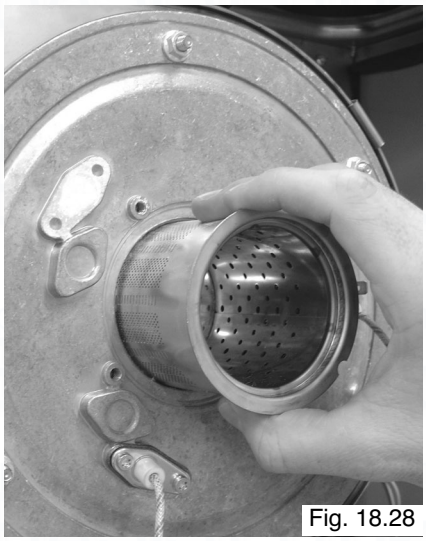
Fig. 18.28

4. Reassemble in reverse order and checking all seals are undamaged and the burner is positioned correctly (Fig. 18.29).

Fig. 18.29

18.4.4 Removing the detection electrode

1. Carry out step ***18.2.1***;
2. Remove the 2 screws "**G**" from the electrode manifold (Fig. 18.30)*;*

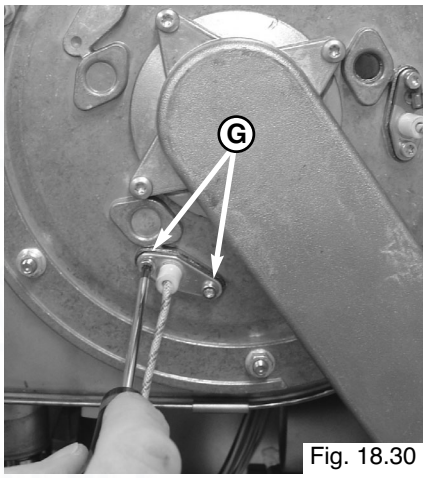

Fig. 18.30

3. Pull the electrode from the combustion chamber (Fig. 18.31);

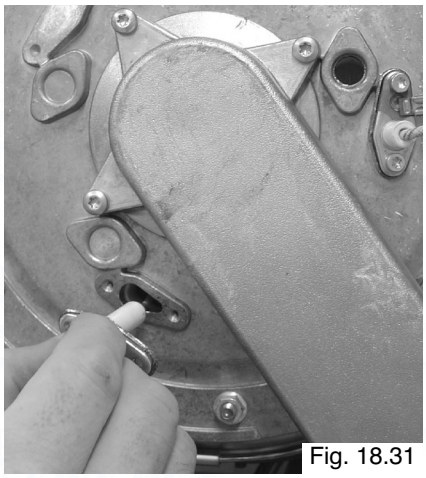
Fig. 18.31

4. Disconnect the detection electrode cable (Fig. 18.32).
5. Reassemble in reverse order.

Fig. 18.32

18.4.5 Removing the ignition electrode

1. Carry out step ***18.2.1***;
2. Remove the earth cable from the electrode (Fig. 18.33)*;*

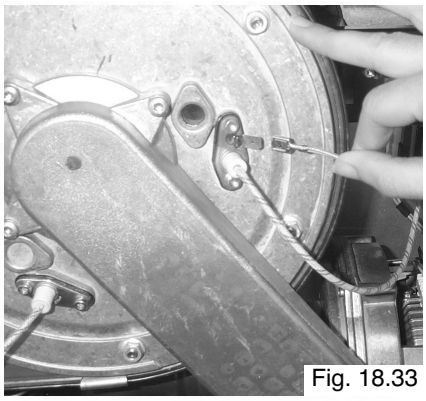
Fig. 18.33

3. Remove the electrode cable "**H**" from the ignitor (Fig. 18.34);

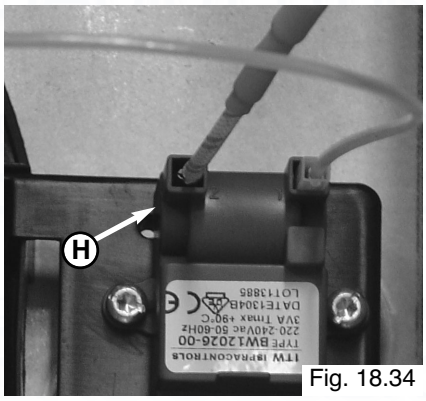

Fig. 18.34

4. Unscrew the 2 screws "**I**" on the electrode (Fig. 18.35);

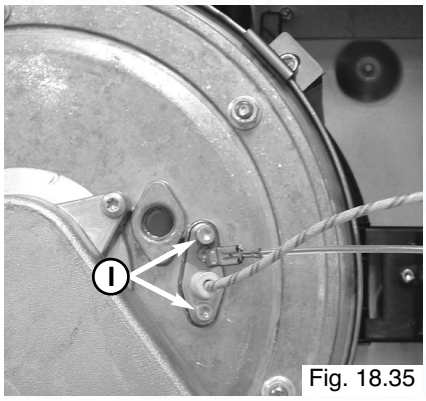

Fig. 18.35

18.4.6 Removing the fan

1. Carry out step ***18.2.1***;
2. Remove the air gas manifiold as in **18.4.2** (Fig. 18.36)*;*

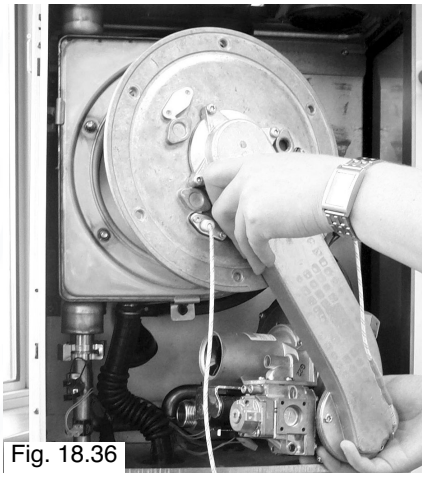
Fig. 18.36

3. Unscrew the two screws from the venturi "**J**" and remove with the gas valve (Fig. 18.37);

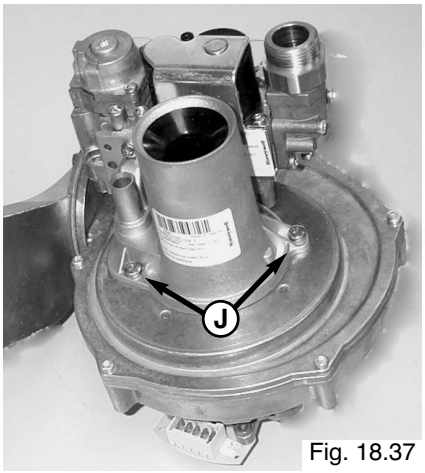

Fig. 18.37

4. Unscrew the three screws "**K**" on the air/gas pipe and remove (Fig. 18.38);
5. Reassemble in reverse order.

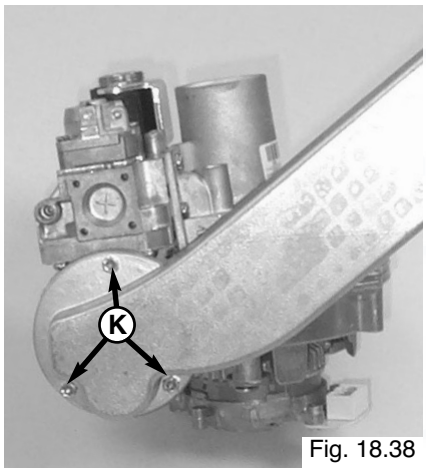

Fig. 18.38

18.4.7 Removing the gas valve

1. Carry out step ***18.2.1***;
2. Remove the air gas manifiold as in ***18.4.2*** (Fig. 18.39)*;*

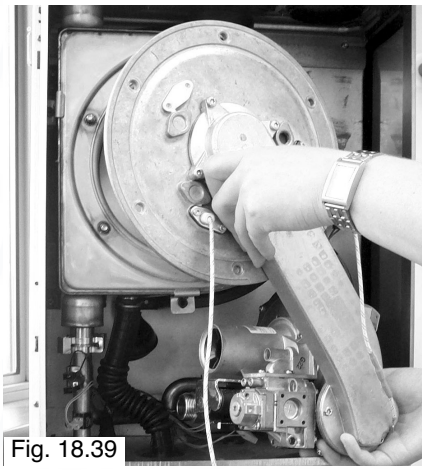
Fig. 18.39

3. Unscrew the three screws "**L**" on the air/gas pipe and remove (Fig. 18.40);

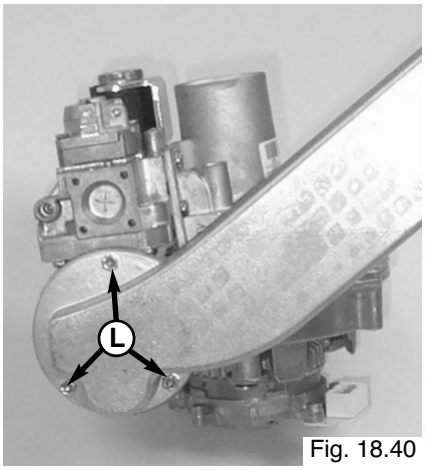

Fig. 18.40

4. Unscrew the three screws holding the gas valve on the venturi (Fig. 18.41);

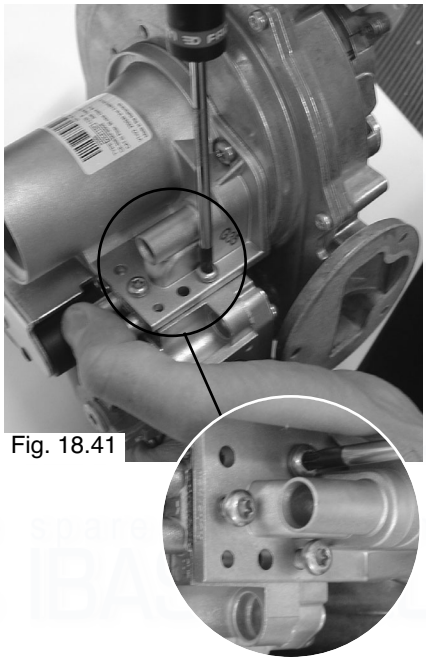
Fig. 18.41

5. Remove the gas valve from the venturi. (Fig. 18.42)*;*
6. Reassemble in reverse order;
7. The gas valve settings will need to be adjusted (see Section 14.3 page 28);
8. Reinstate the gas supply and test for tightness on reassembly.

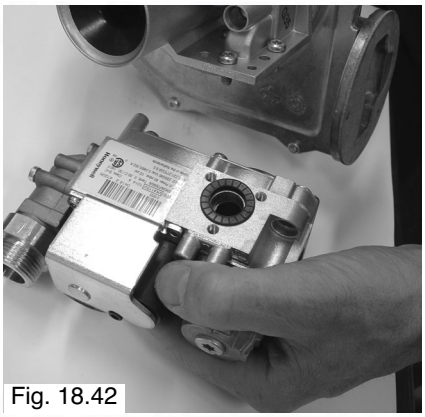
Fig. 18.42

18.4.8 Removing the heat exchanger

1. Carry out step ***18.2.1***;
2. Remove the air gas manifiold as in step ***18.4.2*** (Fig. 18.43)*;*

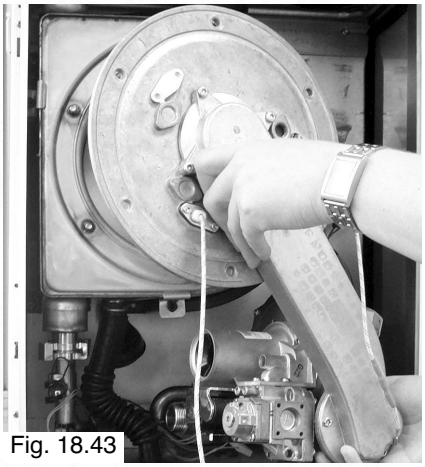
Fig. 18.43

3. Unscrew the three bolts "**M**" from the main heat exchanger (Fig. 18.44);

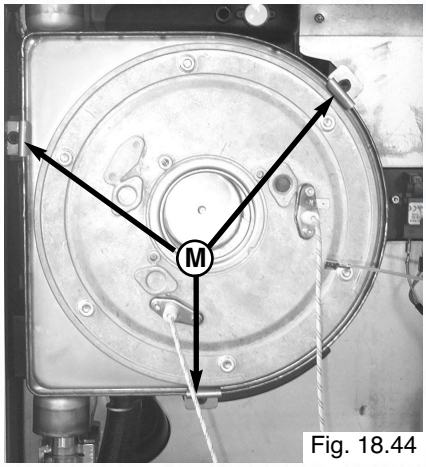

Fig. 18.44

4. Remove the flow and return pipes and the condense drain pipe from the heat exchanger. (Fig. 18.45);

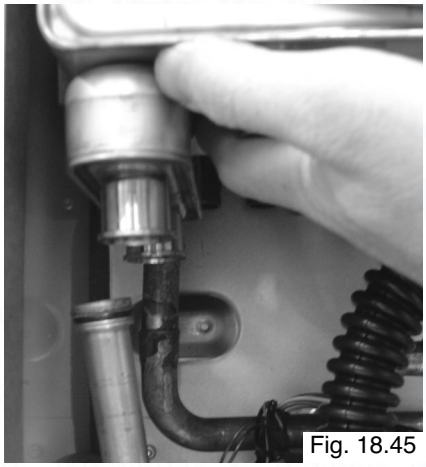
Fig. 18.45

5. Remove the heat exchanger from the boiler by sliding out. (Fig. 18.46);
6. Reassemble in reverse order.

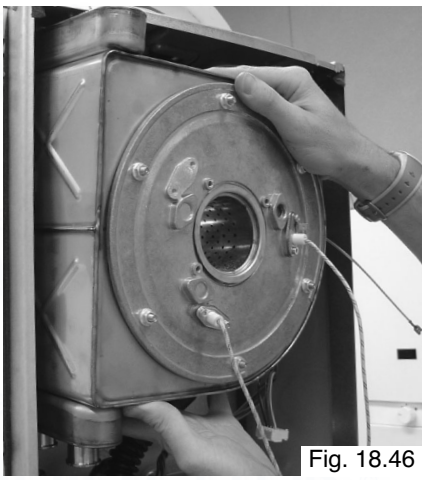
Fig. 18.46

18.4.9 Removing the spark generator

1. Carry out step ***18.2.1***;
2. Disconnect the earth cable from the ignition electrode. (Fig. 18.47)*;*

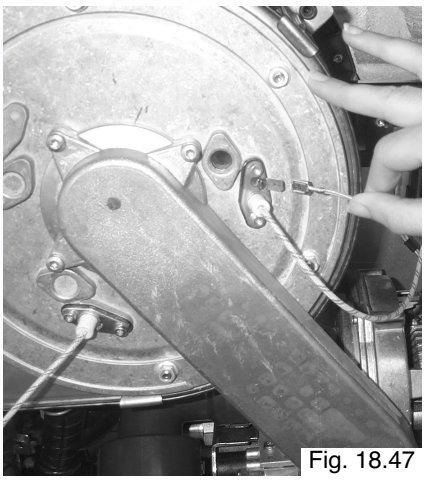
Fig. 18.47

3. Disconnect the ignition electrode, live, neutral and earth cables from the ignitor. (Fig. 18.48);

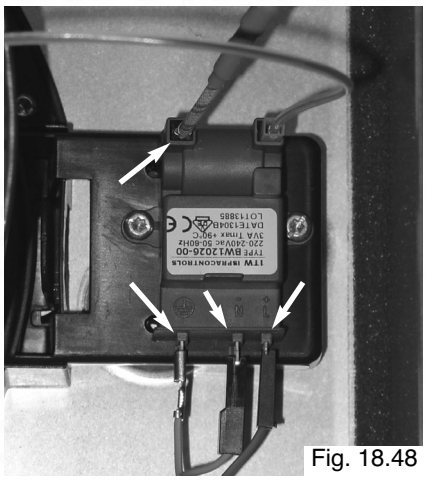
Fig. 18.48

4. Remove the two screws "**N**" from the ignitor and remove (Fig. 18.49);
5. Reassemble in reverse order.

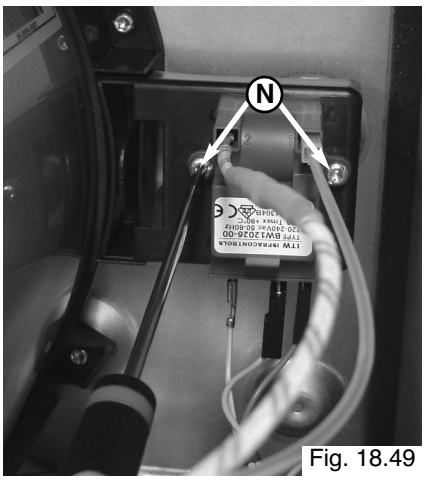

Fig. 18.49

18.5 Access to the Water Circuit

Important ! **Before any component is removed (except the 3 way valve motor), the boiler must be drained of all water.**

18.5.1 Drain down

For the primary circuit :

1. Carry out steps ***18.2.1*** & ***18.2.2;***

2. Open the pressure relief valve (on the pump) (see Fig. 18.50) or the drain screw "**P1**" on the right hydraulic block (see Fig.18.51);

For the D.H.W. circuit :

1. Close the water inlet tap;

2. Open a D.H.W. hot water tap;

3. Open the drain screw "**P2**" on the boiler (see Fig. 18.51) To drain the tank more quickly remove the cap on the tank (see Fig. 18.52);

Important!! Take care when removing the cap to drain the cylinder

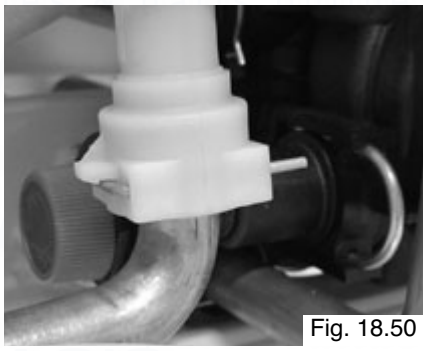
Fig. 18.50

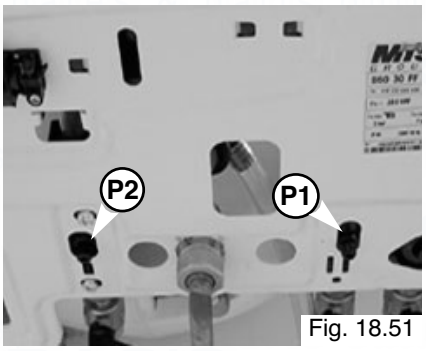

Fig. 18.51

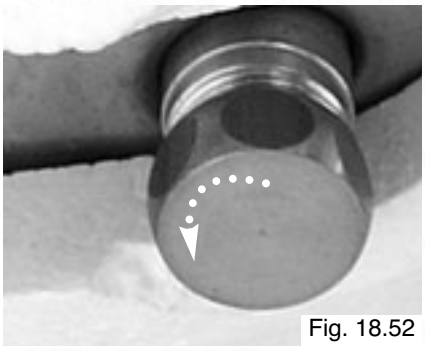
Fig. 18.52

18.5.2 Removing the 3 way valve

1. Carry out steps ***18.2.1*** and ***18.2.2*** ;

2. Remove the clip "**Q1**" and the three way valve motor (see Fig.18.53);

3. Remove the two screws "**Q2**" (see Fig.18.54);

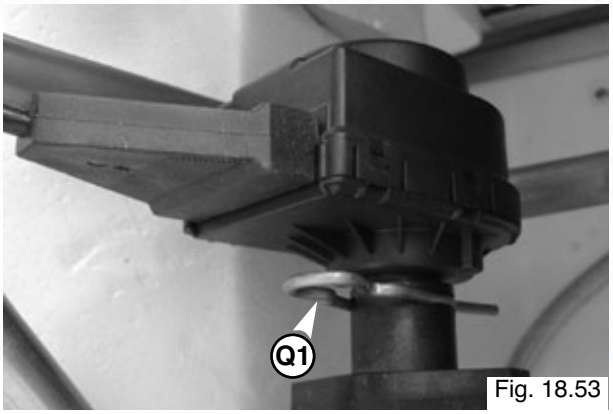

Fig. 18.53

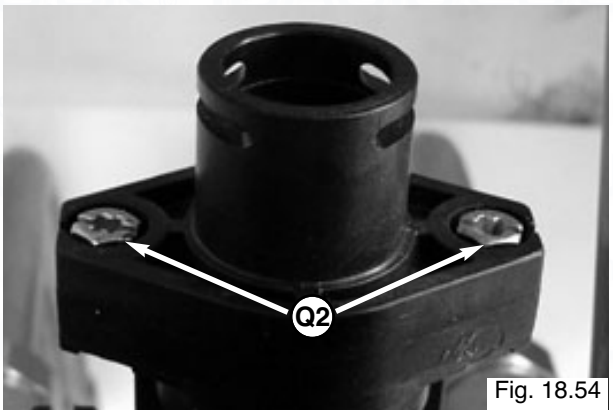

Fig. 18.54

4. Then pull up the three way valve shutter (see Fig.18.55).

5. Reassemble in reverse order.

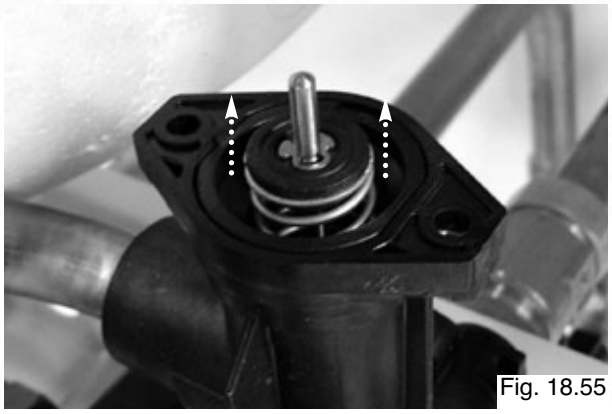
Fig. 18.55

18.5.3 Removing the heating return filter

1. Unscrew 1/4 ball screw "**R**" (see Fig. 18.56);
2. Pull it down (see Fig. 18.57);
3. Reassemble in reverse order.

Fig. 18.56

Fig. 18.57

18.5.4 Removing the by-pass

1. Carry out steps ***18.2.1*** and ***18.2.2***;
2. Remove the heating filter as in step ***18.6.3*** ;
3. Remove the clip and pull out the By-pass (see Fig. 18.58 and 18.59);
4. Reassemble in reverse order.

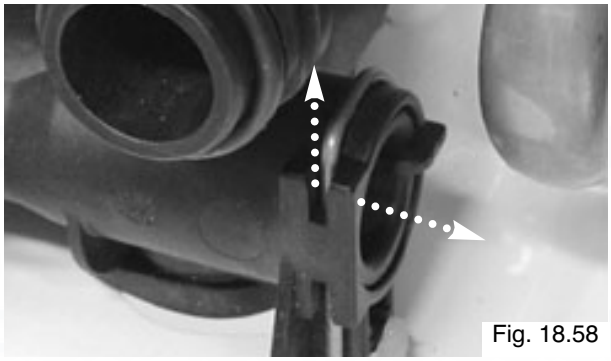
Fig. 18.58

Fig. 18.59

18.5.5 Removing the pressure relief valve (3 bar)

1. Carry out steps ***18.2.1*** and ***18.2.2***;
2. Remove the clip securing the valve and disconnect the safety valve outlet (see Fig. 18.60) and pull it toward the left;
3. Disconnect the flexible pipe (see Fig. 18.61);
4. Reassemble in reverse order.

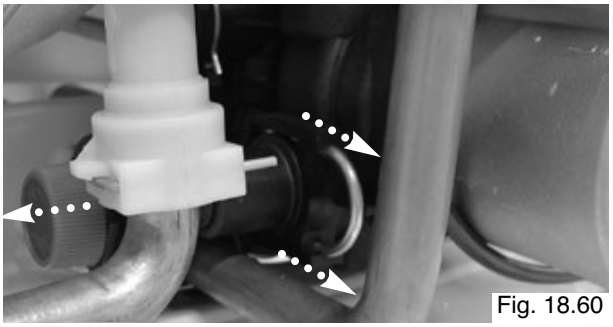
Fig. 18.60

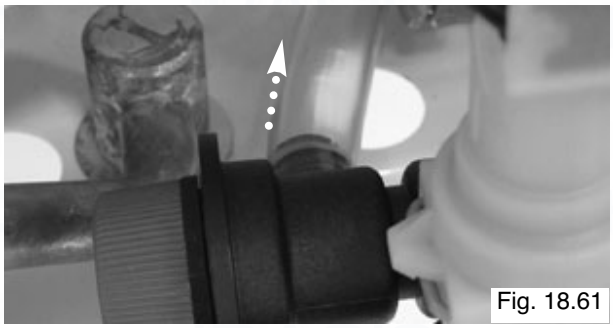
Fig. 18.61

18.5.6 Removing the pressure relief valve (7 bar)

1. Carry out steps ***18.2.1*** and ***18.2.2***;
2. Remove the clip securing the valve and unscrew the nut with a N°24 spanner (see Fg. 18.62);
3. Reassemble in reverse order.

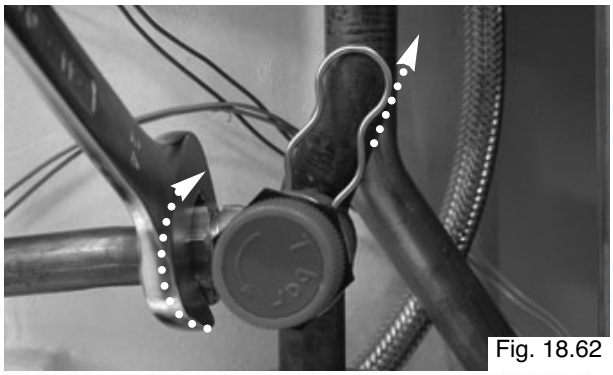
Fig. 18.62

18.5.7 Removing the temperature and pressure relief valve (7 bar)

1. Unscrew the nut and then unscrew the valve (see Fig. 18.63);
2. Reassemble in reverse order.

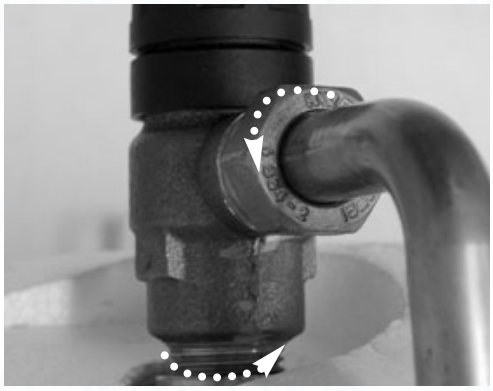

Fig. 18.63

18.5.8 Removing & cleaning the condensate trap

1. Unscrew the cap of the condensate trap (see Fig. 18.64)
2. Empty the condensate products and rinse the condensate trap with clean water (see Fig. 18.65)
3. Reassemble in reverse order and fill the condensate trap with 1/2 litre of water before restarting the boiler.

Fig. 18.64

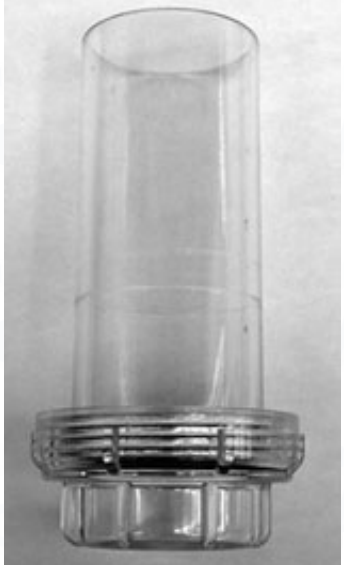

Fig. 18.65

18.5.9 Removing the pressure gauge

1. Remove the casing as in step ***18.2.1***;
2. Pull the pressure gauge out (see Fig. 18.67);
3. Remove the clip "**T4**" securing the pressure gauge (see Fig. 18.68);
4. Reassemble in reverse order.

Fig. 18.66

Fig. 18.67

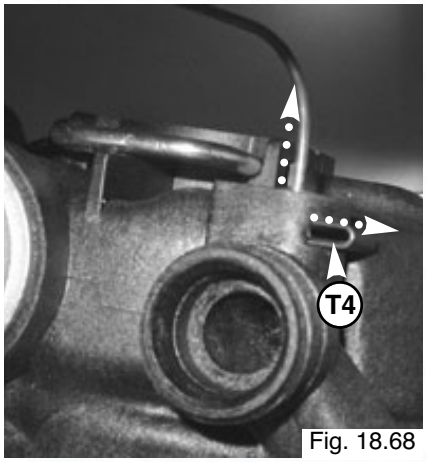

Fig. 18.68

18.5.10 Removing the pump

1. Carry out step **18.2.1**;
2. Open the electrical box cover as in step **18.3.1** (Fig. 18.6);
3. Remove the pump plug from the control board and earth plug from earth socket "**T1**" (see Fig. 18.69);
4. Remove the pressure relief valve 3 bar as in step **18.6.5**;
5. Unscrew the pump nut "**T2**" and remove the two clips "**T3**" on the pump volute (see Fig. 18.70);
6. Pull the pump toward you and remove the clip "**T4**" securing the pressure gauge (see Fig. 18.71);
7. Reassemble in reverse order.

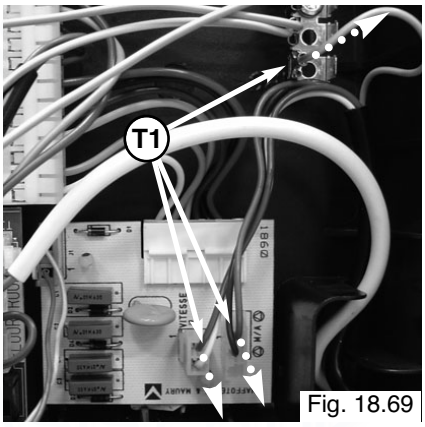

Fig. 18.69

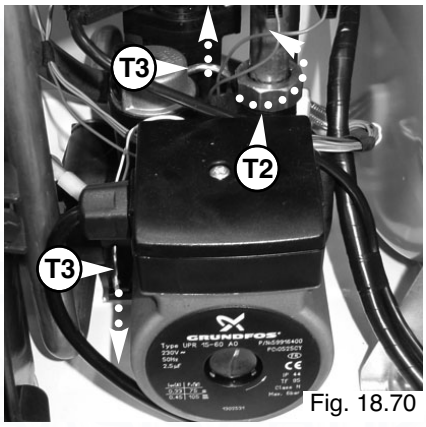

Fig. 18.70

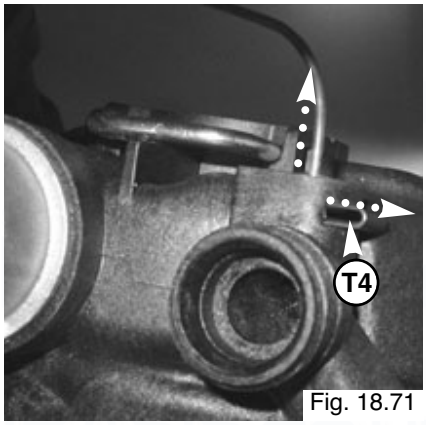

Fig. 18.71

18.5.11 Removing the heating expansion vessel

1. Carry out step **18.2.1**;
2. Remove the screw "**U1**" (see Fig. 18.72);
3. Pull the expansion vessel toward you and remove the nut "**U2**" with a No.17 spanner (see Fig. 18.73);
4. To ensure the easiest access to the hydraulic parts, hang the expansion vessel on the chassis without removing the nut (see Fig. 18.74);
5. Reassemble in reverse order.

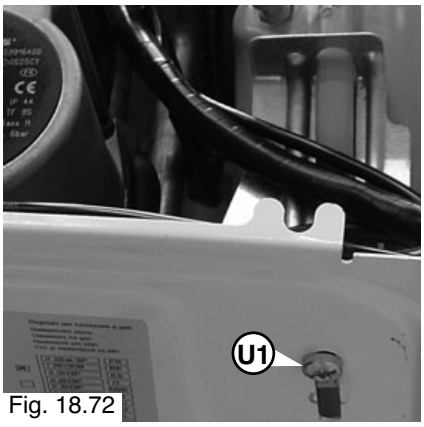

Fig. 18.72

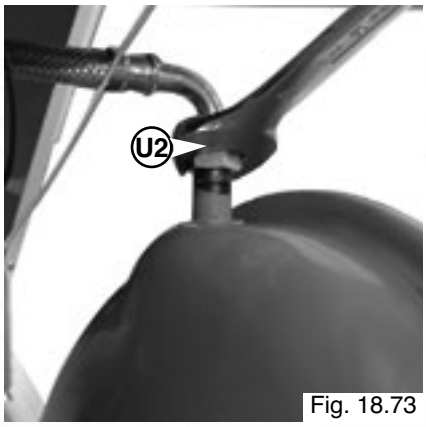

Fig. 18.73

Fig. 18.74

18.5.12 Removing the D.H.W. expansion vessel

1. Remove the casing as in step **18.2.1**;
2. Remove the nut "**V1**" with a No.24 spanner (see Fig. 18.75);
3. Remove the "Pal" nut 1/2 "**V2**" with a No.34 spanner (see Fig. 18.76);
4. Pull up the expansion vessel and unscrew the second "Pal" nut (see Fig. 18.77);
5. Reassemble in reverse order.

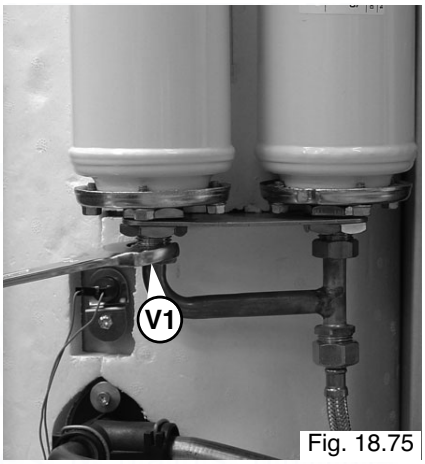

Fig. 18.75

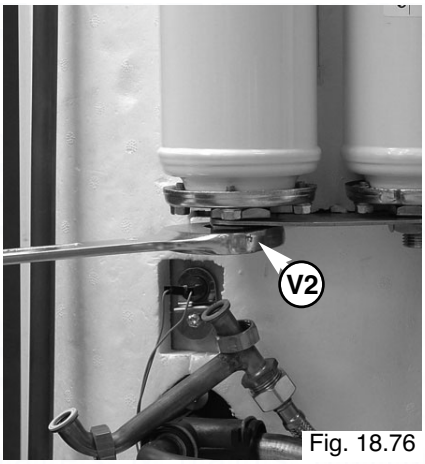

Fig. 18.76

Fig. 18.77

18.5.13 Removing the overheat thermostat

1. Remove the casing as in step **18.2.1**;
2. Pull off the thermostat connections. Then remove the thermostat from the pipe by releasing it's securing clip (see Fig. 18.78);

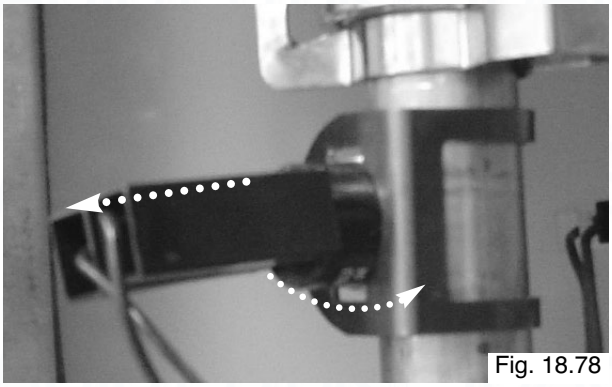

Fig. 18.78

18.5.14 Removing the temperature sensors (N.T.C's)

1. Remove the casing as in step **18.2.1**;
2. Pull off the NTC connections. Then remove the NTC from the pipe by releasing it's securing clip (see Fig. 18.79).

Fig. 18.79

18.5.15 Removing the tank temperature sensor

1. Remove the casing as in step ***18.2.1*** ;
2. Pull off the NTC connections. Then remove the NTC from the tank by removing the screws (see Fig. 18.80).

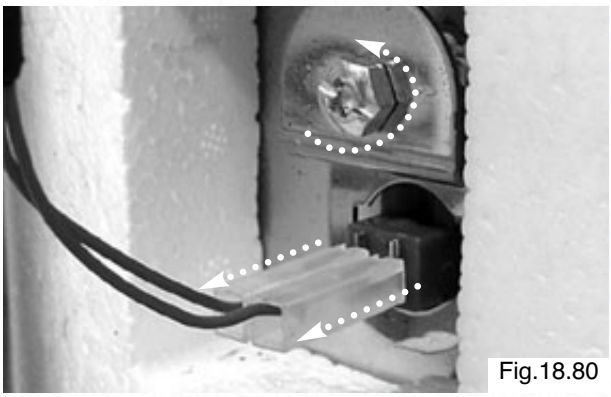

Fig.18.80

18.5.16 Removing the water pressure gauge

1. Remove the casing as in step ***18.2.1*** ;
2. Pull off the connections. Then remove the clip from the pipe (see Fig. 18.81).

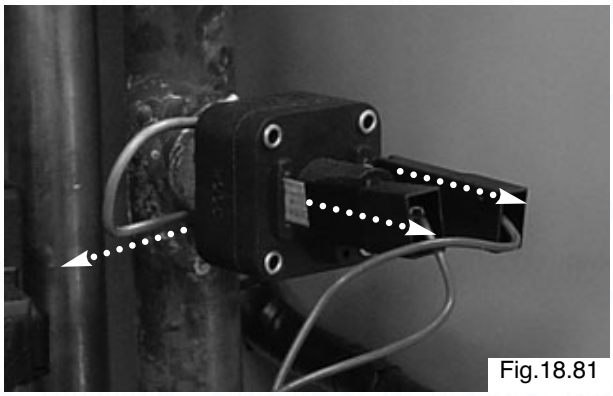

Fig.18.81

18.5.17 Removing the flow switch

1. Remove the casing as in step ***18.2.1*** ;
2. Remove electrical connection and the two clips fixing the flow switch (see Fig. 18.82);
3. Pull down the lower pipe and remove the flow switch;
4. Reassemble in reverse order, the arrow must be positioned correctly (see Fig. 18.83 and 18.84);
5. Reassemble in reverse order

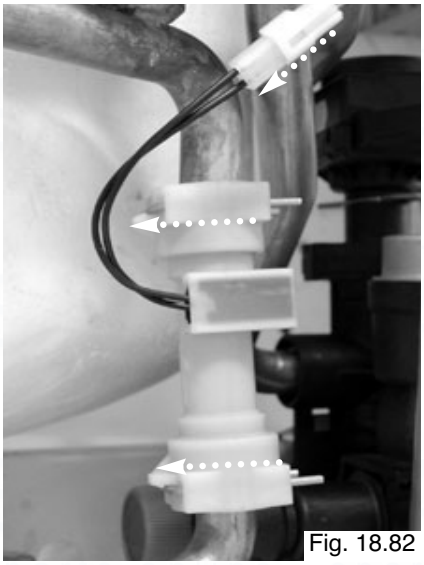

Fig. 18.82

Fig. 18.83

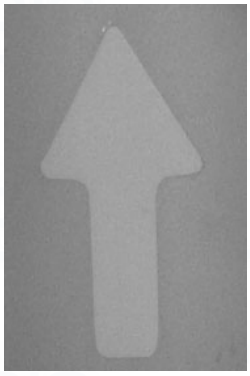

Fig. 18.84

18.5.18 Removing the DHW temperature sensor

1. Carry out step ***18.2.1***;
2. Turn the sensor support anticlockwise to liberate it (see Fig.18.85);
3. Remove the connections (see Fig.18.86);
4. Reassemble in reverse order.

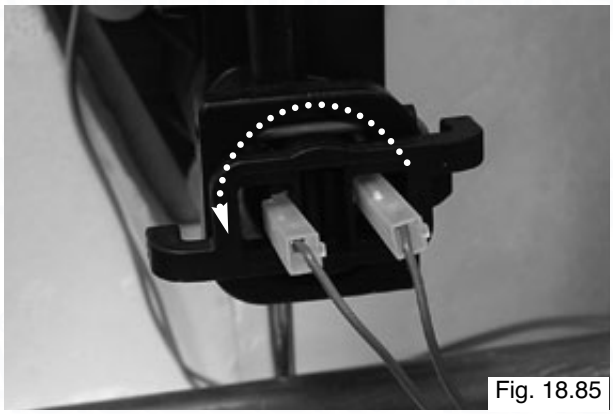
Fig. 18.85

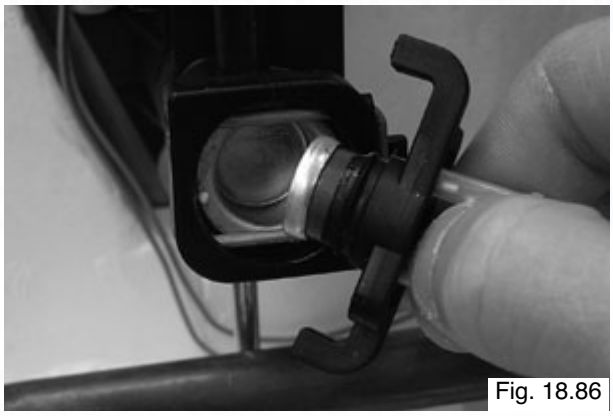
Fig. 18.86

18.5.19 Removing the non return valve

1. Carry out steps **18.2.1** and **18.2.2**;
2. Remove the clip "**X1**" to liberate the DHW expansion vessel (see Fig. 18.87);
3. Remove the two clips "**X2**" and remove the pipe (see Fig. 18.87);
4. Remove the two screws from the bottom of the boiler (see Fig. 18.88) and pull the block toward you;
5. Remove the limiter from the block (see Fig.18.89);
6. Reassemble in reverse order.

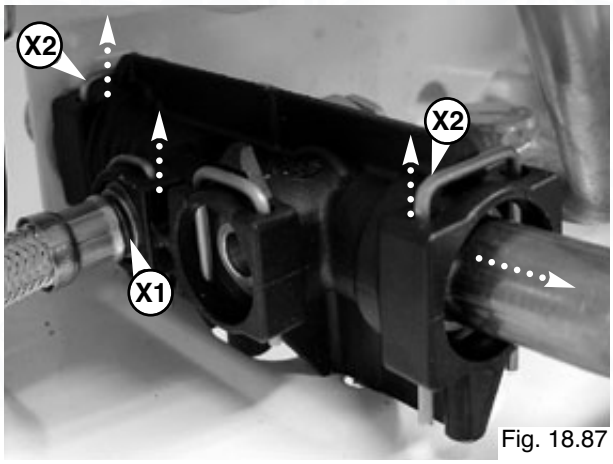

Fig. 18.87

Fig. 18.88

Fig. 18.89

18.5.20 Removing the plate heat exchanger

1. Carry out step **18.2.1**;
2. Remove the isolating cover by pulling it toward you (see Fig. 18.90);
3. Remove the screw "**Y1**" with a N°8 spanner (see Fig.18.91);
4. Remove the two clips "**Y2**" on the right part (see Fig.18.91);
5. Pull up the exchanger to disengage it from the pipes and remove the screw T20 "**Y3**" (see Fig.18.92);
6. Reassemble in reverse order.

Fig. 18.90

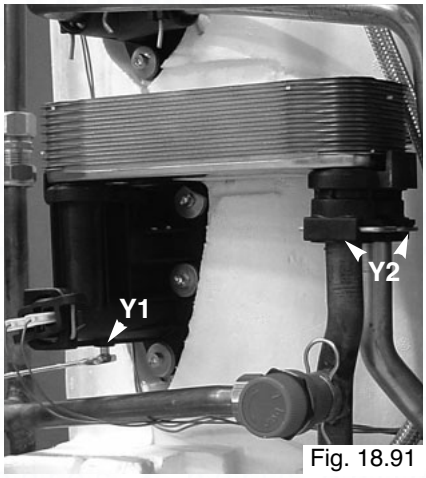

Fig. 18.91

Fig. 18.92

18.5.21 Removing the tank

1. Remove the casing as in steps ***18.2.1*** *and* ***18.2.2***;
2. Remove all clips, nuts (No. 24, 25, 30 spanner) and eletrical connections (sensor) from the tank (see Fig. 18.93 & 18.94);
   - ***Temperature and relief valve (7bar) in step 18.5.6***
   - ***Pressure relief valve (7bar) in step 18.5.7***
   - ***DHW expansion vessel in step 18.5.12***
   - ***Tank temperature sensor in step 18.5.15***
   - ***DHW temperature sensor in step 18.5.18***
   - ***Plate heat exchanger in step 18.5.20***
3. Remove the nut "**Z1**" (N°30 spanner) and the "Pal" nut "**Z2**" (N°34 spanner) on the bottom of the boiler to disengage the pipe between the chassis and the thermal valve (see Fig. 18.95);
4. Remove the two screws "**Z3**" on the left side panel (see Fig. 18.96);
5. Remove the nut (No. 10 spanner) on the top of the tank (see Fig. 18.97);
6. Pull up the tank to disengage it, and then toward you to remove it.
7. Reassemble in reverse order

Fig.18. 93

Fig. 18.94

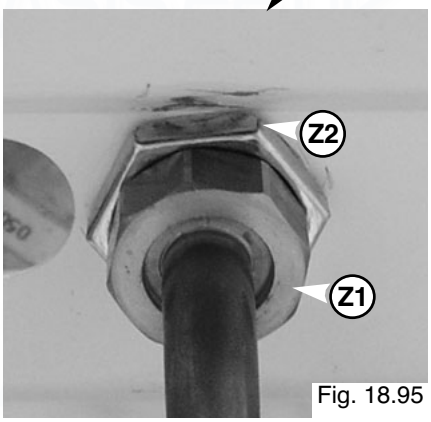

Fig. 18.95

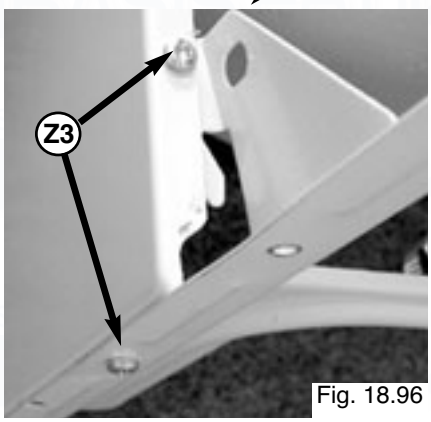

Fig. 18.96

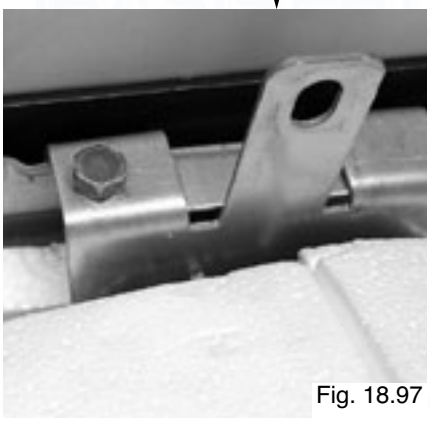

Fig. 18.97

19. FAULT FINDING GUIDE (Flow-chart)

It is possible to detect and correct defects by using the standard fault finding diagrams described in this chapter.

NOTE: THESE CHECKS ARE NOT EXHAUSTIVE.

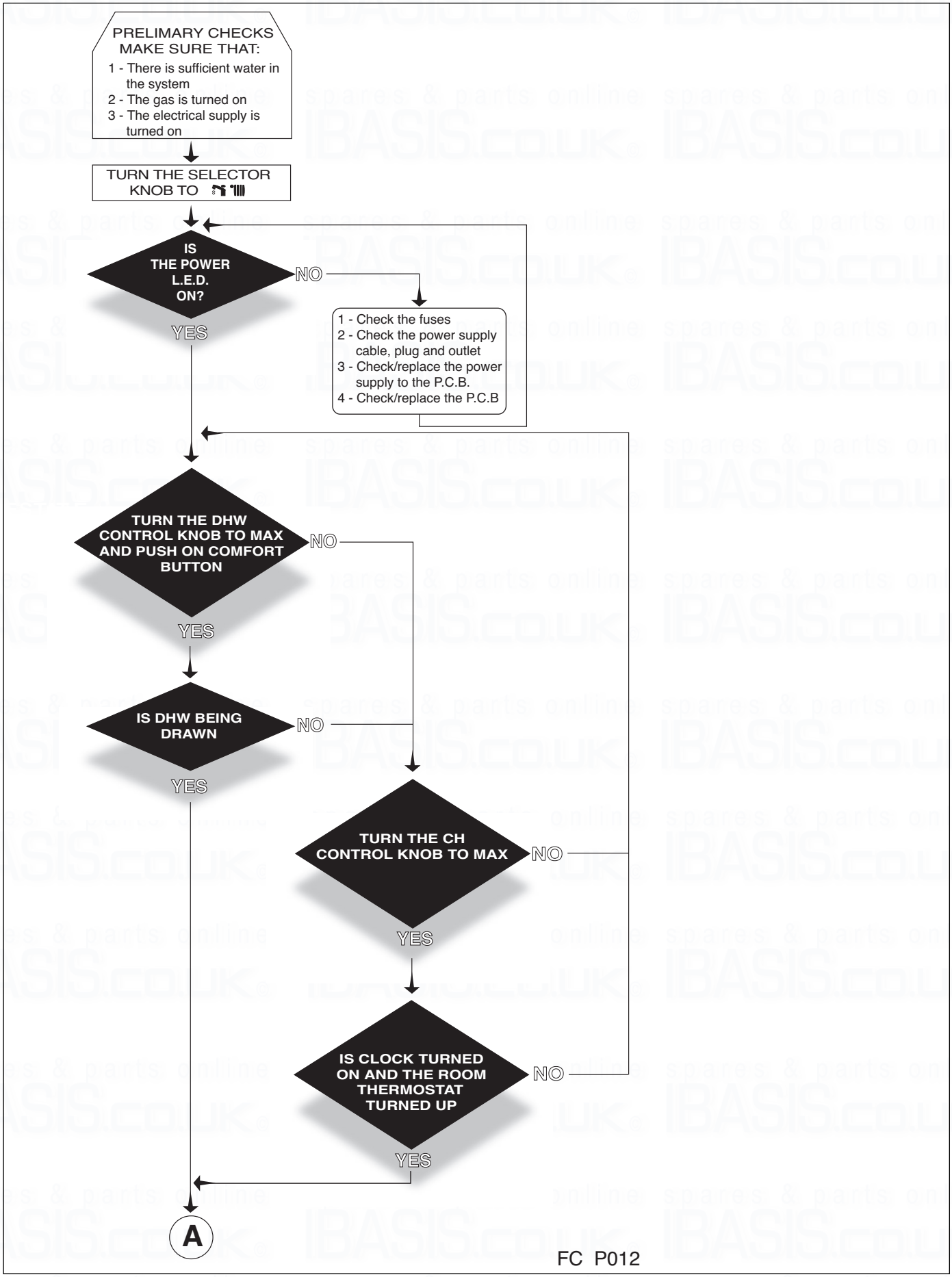

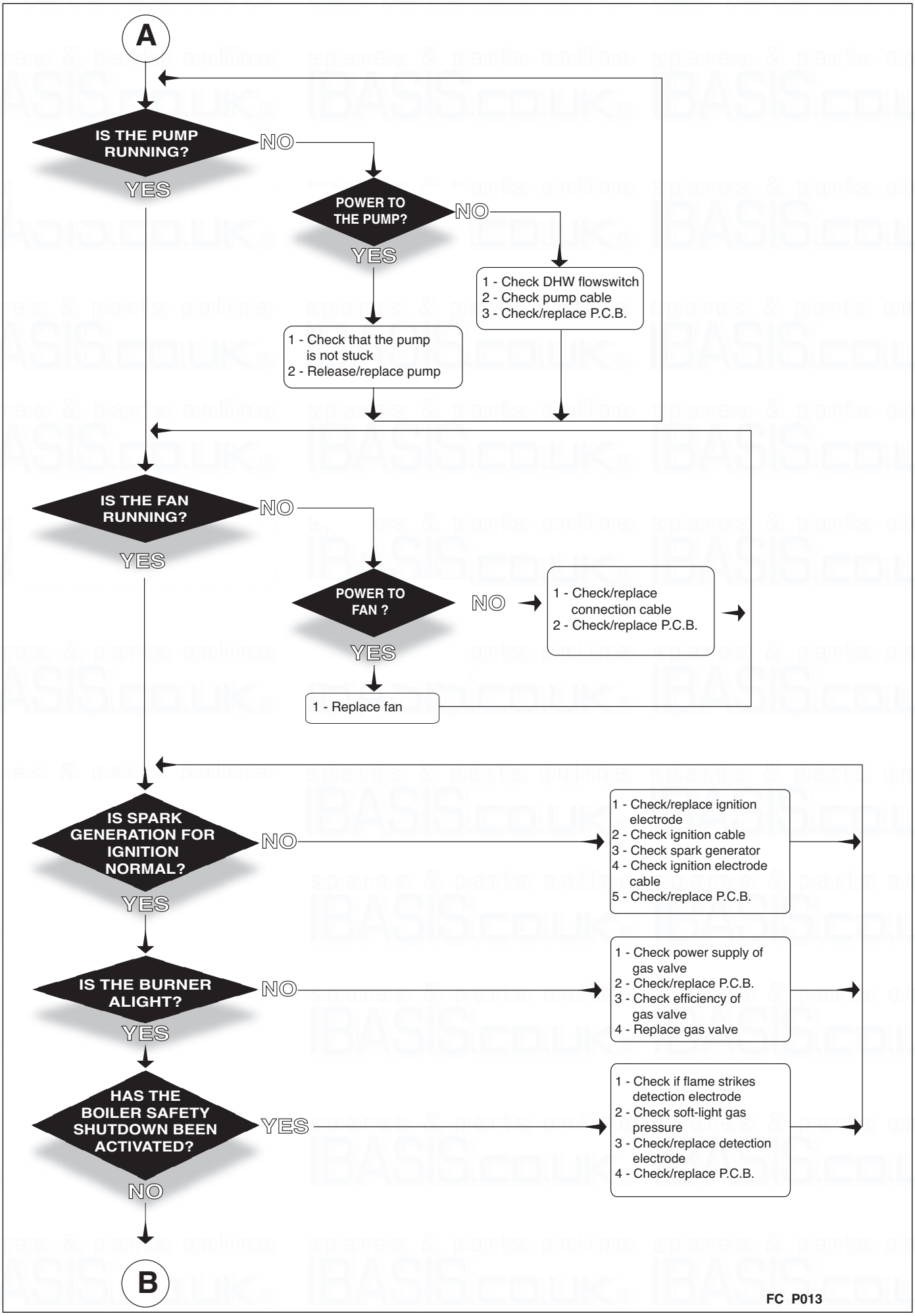
A
IS THE PUMP RUNNING?
NO
YES
POWER TO THE PUMP?
NO
YES
1 - Check DHW flowswitch
2 - Check pump cable
3 - Check/replace P.C.B.
1 - Check that the pump is not stuck
2 - Release/replace pump
IS THE FAN RUNNING?
NO
YES
POWER TO FAN ?
NO
YES
1 - Check/replace connection cable
2 - Check/replace P.C.B.
1 - Replace fan
IS SPARK GENERATION FOR IGNITION NORMAL?
NO
YES
1 - Check/replace ignition electrode
2 - Check ignition cable
3 - Check spark generator
4 - Check ignition electrode cable
5 - Check/replace P.C.B.
IS THE BURNER ALIGHT?
NO
YES
1 - Check power supply of gas valve
2 - Check/replace P.C.B.
3 - Check efficiency of gas valve
4 - Replace gas valve
HAS THE BOILER SAFETY SHUTDOWN BEEN ACTIVATED?
YES
NO
1 - Check if flame strikes detection electrode
2 - Check soft-light gas pressure
3 - Check/replace detection electrode
4 - Check/replace P.C.B.
B
FC P013

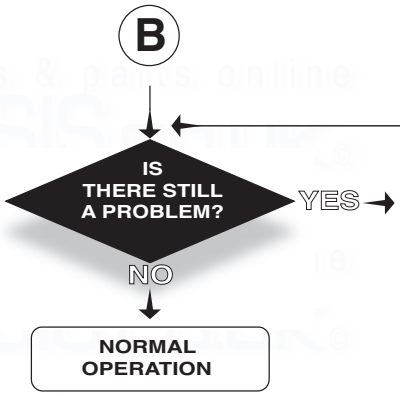

	FAULTS	POSSIBILE CAUSES
1	Drawing D.H.W: When you turn on a tap burner switches off	- check temperature probes - faulty D.H.W. flow switch
2	Drawing D.H.W: radiators heat up in summer mode	- faulty 3-way valve
3	Drawing D.H.W: insufficient hot water temperature	- check temperature probes - check gas pressures - check water flow rate
4	Drawing D.H.W: noisy operation	- primary heat exchanger faulty or lime-scale deposits - low heating system water pressure - check gas pressures - check temperature probes
5	Decrease/increase heating circuit pressure	- check for leaks on the heating circuit - faulty filling-loop - expansion vessel faulty
6	Repeated shutdowns	- faulty detection electrodes - check gas settings - check flame detection electric circuit
7	Repeated intervention of safety thermostat	- check temperature probes - overheat thermostat not calibrated correctly - air in primary water circuit
8	When cold water tap turned off, the boiler ignites	- drop in pressure in the water mains, with consequent water hammer
9	Insufficient radiator temperature	- check C.H. temperature probe - check by-pass and pump speed - check gas pressures

FC P014

20. SHORT SPARES LIST

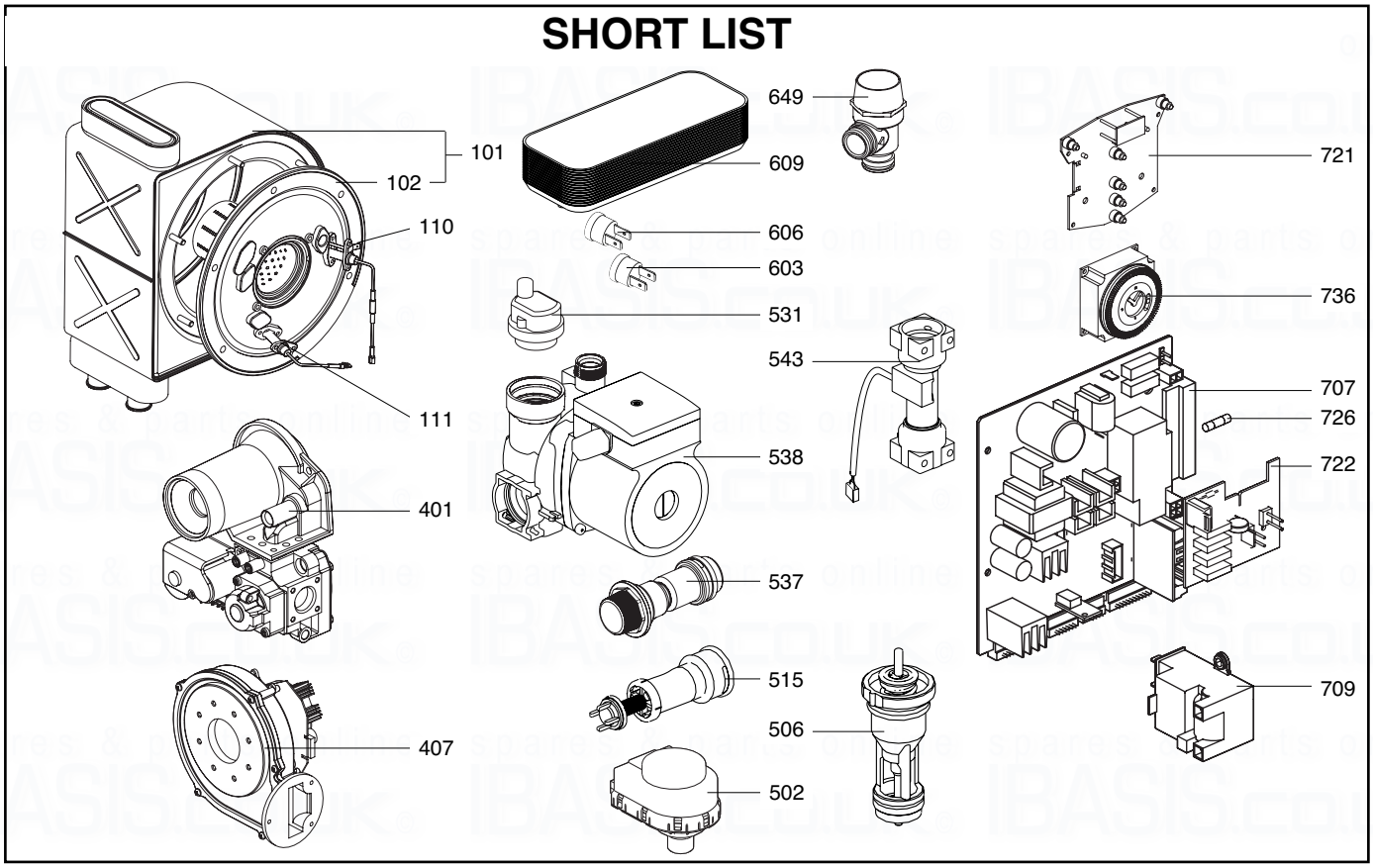

Key N°	Description	Manf. Pt. N°	Other	Type	GENUS HE PLUS 35		Manf. date from	Manf. date to
0101	BURNER 35KW	61314834			●			
0102	DOOR ASSY	61313614			●			
0110	IGNITION ELECTRODE	61317432			●			
0111	IONIZATION ELECTRODE	61317433			●			
0401	GAS VALVE	61315410			●			
0407	FAN ASSY	61314434			●			
0502	MOTOR - THREE-WAY VALVE	61302483			●			
0506	VALVE KIT	61303330			●			
0515	BY-PASS	61305111			●			
0531	AIR SEPARATOR HEAD ASSEMBLY	61304608			●			
0537	PRESSURE RELIEF VALVE	61305113			●			
0538	PUMP + AIR SEPARATOR 15/50	61301964			●			
	PUMP + AIR SEPARATOR 15/60	61303461			●			
0543	STOPPED WATER THROTTLE	61304982			●			
0603	THERMISTOR TEMPERATURE SENSOR	61314258			●			
0606	OVERHEAT THERMOSTAT 100°C	61010572	277783		●			
0609	WATER/WATER HEAT EXCHANGER 16	61314111			●			
0649	PRESSURE RELIEF VALVE 7 BARS	61314112			●			
0707	P.C.B. (ACO-MCU)	65103508			●			
0709	IGNITER	61002105-20	379075		●			
0721	P. C. B. (DISPLAY)	65102235			●			
0722	PRINTED CIRCUIT BOARD	61314958			●			
0726	FUSE 250V 2A	60054442	264561		●			
0736	CLOCK	999599			●			

BENCHMARK No. | | | | | | |

benchmark™ COLLECTIVE MARK

GAS BOILER COMMISSIONING CHECKLIST

BOILER SERIAL No. _____ **NOTIFICATION No.** _____

CONTROLS *To comply with the Building Regulation, each section must have a tick in one or other of the boxes*

TIME & TEMPERATURE CONTROL TO HEATING	ROOM T/STAT & PROGRAMMER/TIMER ☐	PROGRAMMABLE ROOMSTAT ☐
TIME & TEMPERATURE CONTROL TO HOT WATER	CYLINDER T/STAT & PROGRAMMER/TIMER ☐	COMBI BOILER ☐
HEATING ZONE VALVES	FITTED ☐	NOT REQUIRED ☐
HOT WATER ZONE VALVES	FITTED ☐	NOT REQUIRED ☐
THERMOSTATIC RADIATOR VALVES	FITTED ☐	
AUTOMATIC BYPASS TO SYSTEM	FITTED ☐	NOT REQUIRED ☐

FOR ALL BOILERS CONFIRM THE FOLLOWING

THE SYSTEM HAS BEEN FLUSHED IN ACCORDANCE WITH THE BOILER MANUFACTURER'S INSTRUCTIONS? ☐

THE SYSTEM CLEANER USED

THE INHIBITOR USED

FOR THE CENTRAL HEATING MODE, MEASURE & RECORD

GAS RATE	☐	m^3/hr	☐ ft^3/hr
BURNER OPERATING PRESSURE (IF APPLICABLE)	☐	N/A	☐ mbar
CENTRAL HEATING FLOW TEMPERATURE			☐ °C
CENTRAL HEATING RETURN TEMPERATURE			☐ °C

FOR COMBINATION BOILERS ONLY

HAS A WATER SCALE REDUCER BEEN FITTED? YES ☐ NO ☐

WHAT TYPE OF SCALE REDUCER HAS BEEN FITTED

FOR THE DOMESTIC HOT WATER MODE, MEASURE & RECORD

GAS RATE	☐	m^3/hr	☐ ft^3/hr
MAXIMUM BURNER OPERATING PRESSURE (IF APPLICABLE)	☐	N/A	☐ mbar
COLD WATER INLET TEMPERATURE			☐ °C
HOT WATER OUTLET TEMPERATURE			☐ °C
WATER FLOW RATE			☐ lts/min

FOR CONDENSING BOILERS ONLY CONFIRM THE FOLLOWING

THE CONDENSATE DRAIN HAS BEEN INSTALLED IN ACCORDANCE WITH THE MANUFACTURER'S INSTRUCTIONS? YES ☐

FOR ALL INSTALLATIONS CONFIRM THE FOLLOWING

THE HEATING AND HOT WATER SYSTEM COMPLIES WITH CURRENT BUILDING REGULATIONS ☐

THE APPLIANCE AND ASSOCIATED EQUIPMENT HAS BEEN INSTALLED AND COMMISSIONED IN ACCORDANCE WITH THE MANUFACTURER'S INSTRUCTIONS ☐

IF REQUIRED BY THE MANUFACTURER, HAVE YOU RECORDED A CO/CO2 RATIO READING? N/A ☐ YES ☐ CO/CO_2 RATIO

THE OPERATION OF THE APPLIANCE AND SYSTEM CONTROLS HAVE BEEN DEMONSTRATED TO THE CUSTOMER ☐

THE MANUFACTURER'S LITERATURE HAS BEEN LEFT WITH THE CUSTOMER ☐

COMMISSIONING ENG'S NAME PRINT _____ CORGI ID No. _____

SIGN DATE

SERVICE INTERVAL RECORD

It is recommended that your heating system is serviced regularly
and that you complete the appropriate Service Interval Record Below.

Service Provider. Before completing the appropriate Service Interval Record below, please ensure you have carried out the service as described in the boiler manufacturer's instructions. Always use the manufacturer's specified spare part when replacing all controls

SERVICE 1 DATE
ENGINEER NAME
COMPANY NAME
TEL No.
CORGI ID CARD SERIAL No.
COMMENTS

SIGNATURE

SERVICE 2 DATE
ENGINEER NAME
COMPANY NAME
TEL No.
CORGI ID CARD SERIAL No.
COMMENTS

SIGNATURE

SERVICE 3 DATE
ENGINEER NAME
COMPANY NAME
TEL No.
CORGI ID CARD SERIAL No.
COMMENTS

SIGNATURE

SERVICE 4 DATE
ENGINEER NAME
COMPANY NAME
TEL No.
CORGI ID CARD SERIAL No.
COMMENTS

SIGNATURE

SERVICE 5 DATE
ENGINEER NAME
COMPANY NAME
TEL No.
CORGI ID CARD SERIAL No.
COMMENTS

SIGNATURE

SERVICE 6 DATE
ENGINEER NAME
COMPANY NAME
TEL No.
CORGI ID CARD SERIAL No.
COMMENTS

SIGNATURE

SERVICE 7 DATE
ENGINEER NAME
COMPANY NAME
TEL No.
CORGI ID CARD SERIAL No.
COMMENTS

SIGNATURE

SERVICE 8 DATE
ENGINEER NAME
COMPANY NAME
TEL No.
CORGI ID CARD SERIAL No.
COMMENTS

SIGNATURE

SERVICE 9 DATE
ENGINEER NAME
COMPANY NAME
TEL No.
CORGI ID CARD SERIAL No.
COMMENTS

SIGNATURE

SERVICE 10 DATE
ENGINEER NAME
COMPANY NAME
TEL No.
CORGI ID CARD SERIAL No.
COMMENTS

SIGNATURE

21. TECHNICAL INFORMATION

Model				GENUS HE 35 Plus	
CE certificate				1312-BP-4082	
Performance category				****	
NoX class				5	
Category				II2H3P	
Heating output	80°C/60°C	Kw		6 to 30	
Heating output	50°C/30°C	Kw		7 to 32	
Variable hot water power	Pn max	Kw		35	
Nominal gas flow rate (15 °C-1013 mbar)				min	max
Central Heating & DHW flow rate		Qn	kW	7	31
G 20 (NG H -Lacq)	34,02 MJ/m³ under 20 mbar	Vr	m³/h	0,74	3,28
G 31 (Propane)	46,4 MJ/kg 37 under mbar	Vr	kg/h	0,54	2,41
Membrane Diameter (mm)/marking					
G 20			mm	without	
G 31 (propane)			mm	5	
Adjustable heating outlet temperature:			°C	25 to 75 or 42 to 82	
Central heating minimum flow rate			l/h	300	
Central heating circuit maximum pressure		Pw max	bar	3	
Central heating expansion vessel capacity			L	7,1	
Expansion vessel inflation pressure			bar	0,7	
Adjustable hot water temperature			°C	40 to 70	
Stored D.H.W. cylinder capacity			L	42	
DHW ignition flow rate			l/min.	2	
DHW specific flow rate (ΔT: 30 K)		D	l/min.	21,0	
DHW start minimum pressure		Pw min	bar	0,3	
Maximum pressure of DHW circuit		Pw max	bar	7	
DHW expansion vessel		L		4	
Electric voltage				230 volt, single phase - 50 Hz	
Electrical input power		W		150	
Electrical protection				IP44	
Fresh air flow rate required for combustion		V	m³h.	40	
Mass flow rate for combustion products				15,5	
Fume temperature (60-80)			°C	67	
Fume temperature (30-50)			°C	60	
CO2 G20			%	9	
CO2 G31			%	10	
Dimensions		Height / Width / Depth (mm)		950 / 595 / 470	
Weight			kg	59	
Flue duct type				C13 C33 C43 C53 B23	
SEDBUK			Band	A	

This appliance is suitable for Natural gas or LPG. A gas conversion must be made by a competent person.

spares & parts online IBASIS.co.uk

Commercial subsidiaries:

MTS (GB) Limited
MTS Building
Hughenden Avenue
High Wycombe
Bucks HP13 5FT

Telephone: (01494) 755600

Fax: (01494) 459775

Internet: www.mtsgroup.com/uk

E-mail: info@uk.mtsgroup.com

Technical Advice: 0870 241 8180

Customer Service: 0870 600 9888

Professional Team Limited
Suites 9 & 10, Plaza 256
Blanchardstown Corporate Park 2
Ballycoolin
Dublin 15

Telephone: (01) 810 3723

Fax: (01) 810 3727

Internet: www.mtsgroup.com/ie

E-mail: info@ie.mtsgroup.com

Technical Advice: (01) 437 0121

Customer Service: (01) 437 0121

420010011201 - 07/2007