microCombi

microCombi 23/27 MFFI

Installation and Servicing Instructions

Type C Boilers

G.C.N: 47-116-16 (23kW)
G.C.N: 47-116-24 (27kW)

LEAVE THESE INSTRUCTIONS WITH THE END-USER

ARISTON

benchmark™
COLLECTIVE MARK

The code of practice for the installation, commissioning & servicing of central heating systems

CE

Country of destination: GB, IE

TABLE OF CONTENTS

1. GENERAL INFORMATION — Page. 3

1.1 General Instructions — Page. 3
1.2 Overall View — Page. 4

2. INSTALLATION — Page. 4

2.1 Reference Standards — Page. 4
2.2 Siting the Appliance — Page. 5
2.3 Overall Dimensions — Page. 6
2.4 Clearances — Page. 6
2.5 Mounting the Appliance — Page. 7
2.6 Electrical Connection — Page. 7
2.7 Gas Connection — Page. 8
2.8 Water Connection — Page. 8
2.9 Flue Connection — Page. 10
2.10 Control Panel — Page. 17
2,11 Removing the Front Panel — Page. 17
2.12 Room Thermostat Connection — Page. 18
2.13 Electrical/System Diagrams — Page. 19
2.14 Water Circuit Diagram — Page. 20

3. COMMISSIONING — Page. 21

3.1 Initial Preparation — Page. 21
3.2 Initial Start-up — Page. 22
3.3 Operational Adjustments — Page. 22
3.4 Combustion Analysis — Page. 23
3.5 Product of Combustion Discharge Monitoring — Page. 23
3.6 Boiler Safety Systems — Page. 23
3.7 Draining the System — Page. 24
3.8 Completion — Page. 24
3.9 Operational Checks — Page. 24
3.10 Instructing the End User — Page. 25

4. GAS ADJUSTMENTS

4.1 Changing the Type of Gas — Page. 26
4.2 Adjusting the Gas Pressures (Sit Sigma) — Page. 26
Adjusting the Gas Pressures (Honeywell) — Page. 28

5. MAINTENANCE — Page. 30

6. SERVICING INSTRUCTIONS — Page. 31

6.1 Replacement of Parts — Page. 31
6.2 To Gain General Access — Page. 31
6.2.1 Removing the Front Panel — Page. 31
6.2.2 Removing the Sealed Chamber Front Panel — Page. 32
6.2.3 Removing the Side Panels — Page. 32
6.3 Access to the Combustion Chamber — Page. 33
6.3.1 Removing the Combustion Chamber — Page. 33
6.3.2 Removing the Burner and Jets — Page. 33
6.3.3 Removing the Electrodes — Page. 33
6.3.4 Removing the Main Heat Exchanger — Page. 34
6.3.5 Removing the Air Pressure Switch — Page. 35
6.3.6 Removing the Fan — Page. 35
6.4 Access to the Gas Valve — Page. 36
6.4.1 Removing the Spark Generator (Sit Sigma) — Page. 36
6.4.2 Removing the Spark Generator (Honeywell) — Page. 36
6.4.3 Removing the Gas Valve (Sit Sigma) — Page. 37
6.4.4 Removing the Gas Valve (Honeywell) — Page. 37
6.5 Access to the Water Circuit — Page. 38
6.5.1 Removing the Pump Pressure Switch — Page. 38
6.5.2 Removing the Safety Valve — Page. 38
6.5.3 Removing the Automatic Air Vent — Page. 38
6.5.4 Removing the Pump — Page. 39
6.5.5 Removing the Pressure Gauge — Page. 40
6.5.6 Removing the Expansion Vessel — Page. 40
6.5.7 Removing the Overheat Thermostat — Page. 41
6.5.8 Removing the Central Heating Temperature Sensor (N.T.C.) — Page. 41
6.5.9 Removing the D.H.W. Temperature Sensor (N.T.C.) — Page. 41
6.5.10 Removing the D.H.W. Flow Switch — Page. 42
6.6 Access to the Control System — Page. 42
6.6.1 Checking the Fuses — Page. 42
6.6.2 Removing the Time Clock — Page. 43
6.6.3 Removing the P.C.B. — Page. 43

7. FAULT FINDING — Page. 44

7.1 Fault Finding Guide (Flow-Charts) — Page. 44

8. SHORT SPARE PARTS LIST — Page. 49

9. TECHNICAL INFORMATION — Page. 52

1. GENERAL INFORMATION

This manual is an integral and essential part of the product. It should be kept with the appliance so that it can be consulted by the user and our authorised personnel.

Please carefully read the instructions and notices about the unit contained in this manual, as they provide important information regarding the safe installation, use and maintenance of the product.

For operating instructions please consult the separate Users Manual.

1.1 General Instructions

Read the instructions and recommendations in these Installation and Servicing Instructions carefully to ensure proper installation, use and maintenance of the appliance.

Keep this manual in a safe place. You may need it for your own reference while Servicing Technicians or your installer may need to consult it in the future.

This is a combined appliance for the production of central heating (C.H.) and domestic hot water (D.H.W.).

This appliance **must be used only** for the purpose for which it is designed.
The manufacturer declines all liability for damage caused by improper or negligent use.

No asbestos or other hazardous materials have been used in the fabrication of this product.

Before connecting the appliance, check that the information shown on the data plate and the table in section 7 comply with the electric, water and gas mains of the property. You will find the data plate on the reverse of the control panel.
The gas with which this appliance operates is also shown on the label at the bottom of the boiler.

Do not install this appliance in a damp environment or close to equipment which spray water or other liquids.
Do not place objects on the appliance.
Do not allow children or inexperienced persons to use the appliance without supervision.

If you smell gas in the room, **do not turn on or off** light switches, use the telephone or any other object which might cause sparks.
Open doors and windows immediately to ventilate the room.
Shut the gas mains tap (at or adjacent to the gas meter) or the valve of the gas cylinder and call your Gas Supplier immediately.
If you are going away for a long period of time, remember to shut the mains gas tap or the gas cylinder valve.

Always disconnect the appliance either by unplugging it from the mains or turning off the mains switch before cleaning the appliance or carrying out maintenance.

In the case of faults or failure, switch off the appliance and turn off the gas tap. Do not tamper with the appliance.
For repairs, call your local Authorised Servicing Agent and request the use of original spare parts. For in-guarantee repairs contact MTS (GB) Limited.

1.2 Overall View

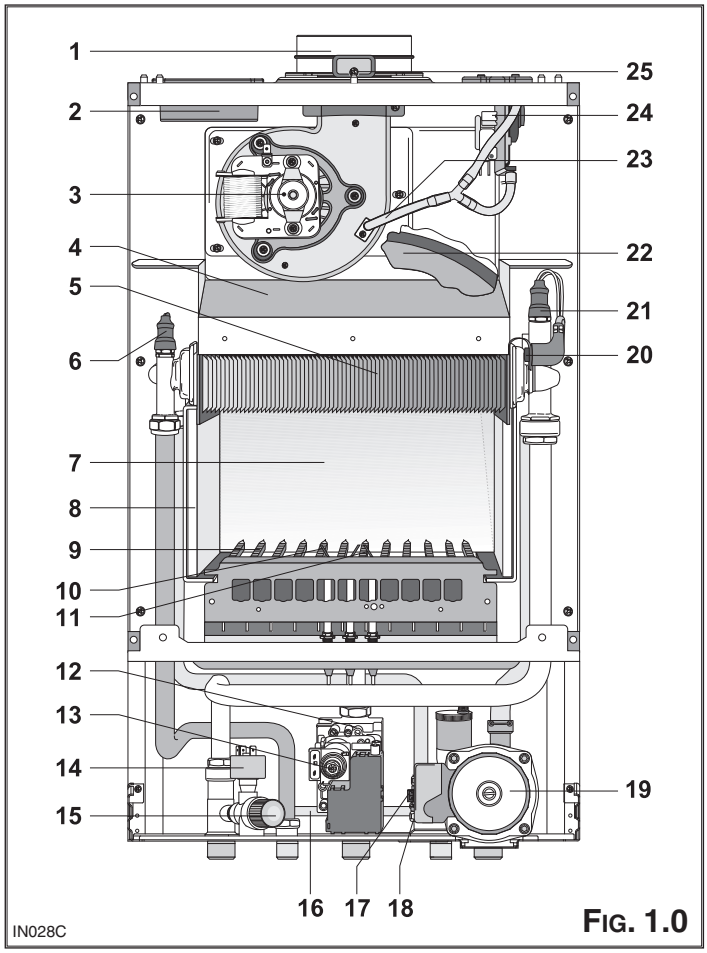

Fig. 1.0

Legend:

1. Flue connector
2. Air intake for twin pipe flue systems
3. Fan
4. Combustion chamber hood
5. "Twin-pass" heat exchanger
6. Domestic hot water temperature probe
7. Combustion chamber
8. Combustion chamber insulation panel
9. Burner
10. Detection electrode
11. Ignition electrodes
12. Gas valve
13. Spark generator
14. Pump pressure switch
15. Safety valve (3 bar)
16. Automatic By-pass
17. D.H.W. Flow switch
18. Domestic hot water inlet filter
19. Circulation pump with automatic air release valve
20. Safety thermostat
21. Main circuit temperature probe
22. Expansion vessel
23. Air pressure switch tube
24. Air pressure switch
25. Combustion analysis points

2. *INSTALLATION*

The technical information and instructions provided herein below are intended for the installer / Servicing Technician so that the unit may be installed and serviced correctly and safely.

2.1 Reference Standards

In the United Kingdom the installation and initial start up of the boiler must be by a CORGI Registered Installer in accordance with the installation standards currently in effect, as well as with any and all local health and safety standards i.e. CORGI.

In the Republic of Ireland the installation and initial start up of the appliance must be carried out by a Competent Person in accordance with the current edition of I.S.813 "Domestic Gas Installations", the current Building Regulations, reference should also be made to the current ETCI rules for electrical installation.

This appliance must be installed by a competent installer in accordance with current Gas Safety (installation & use) Regulations.

The installation of this appliance must be in accordance with the relevant requirements of the Local Building Regulations, the current I.E.E. Wiring Regulations, the bylaws of the local water authority, in Scotland, in accordance with the Building Standards (Scotland) Regulation and Health and Safety document No. 635

"Electricity at work regulations 1989" and in the Republic of Ireland with the current edition of I.S. 813, the Local Building Regulations (IE).

C.O.S.H.H.

Materials used in the manufacture of this appliance are non-hazardous and no special precautions are required when servicing.
Installation should also comply with the following British Standard Codes of Practice

BS 7593:1992	**Treatment of water in domestic hot water central heating systems**
BS 5546:1990	**Installation of hot water supplies for domestic purposes**
BS 5440-1:2000	**Flues**
BS 5440-2:2000	**Air supply**
BS 5449:1990	**Forced circulation hot water systems**
BS 6798:1987	**Installation of gas fired hot water boilers of rated input not exceeding 60kW**
BS 6891:1989	**Installation of low pressure gas pipe up to 28mm**
BS 7671:2001	**IEE wiring regulations**
BS 4814:1990	**Specification for expansion vessels**
BS 5482:1994	**Installation of L.P.G.**

and in the Republic of Ireland in accordance with the following Codes of Practice:

I.S. 813	**Domestic Gas Installations**

2.2 Siting the Appliance

The appliance may be installed in any room or indoor area, although particular attention is drawn to the requirements of the current I.E.E. Wiring Regulations, and in Scotland, the electrical provisions of the Building Regulations applicable in Scotland, with respect to the installation of the combined appliance in a room containing a bath or shower, the location of the boiler in a room containing a bath or shower should only be considered if there is no alternative.

Where a room-sealed appliance is installed in a room containing a bath or shower the appliance and any electrical switch or appliance control, utilising mains electricity should be situated so that it cannot be touched by a person using the bath or shower, specifically in accordance with current IEE Wiring Regulations.

The location must permit adequate space for servicing and air circulation around the appliance as indicated in Section 2.4.
The location must permit the provision of an adequate flue and termination.
For unusual locations special procedures may be necessary.
BS 6798-1987 gives detailed guidance on this aspect.
A compartment used to enclose the appliance must be designed specifically for this purpose. No specific ventilation requirements are needed for the installation

within a cupboard.
This appliance is not suitable for outdoor installation.

The type C appliances (in which the combustion circuit, air vent intake and combustion chamber are air-tight with respect to the room in which the appliance is installed) can be installed in any type of room.

Secondary ventilation is not required with this boiler. The boiler must be installed on a solid, non-combustible, permanent wall to prevent access from the rear.

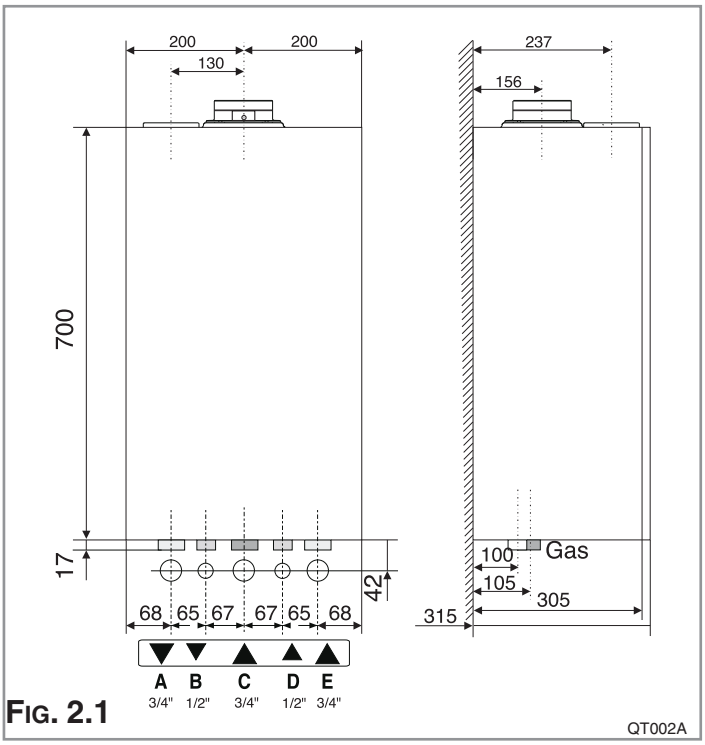

FIG. 2.1

2.3 OVERALL DIMENSIONS

LEGEND:

A = Central Heating Flow (3/4”)
B = Domestic Hot Water Outlet (1/2”)
C = Gas Inlet (3/4”)
D = Domestic Cold Water Inlet (1/2”)
E = Central Heating Return (3/4”)

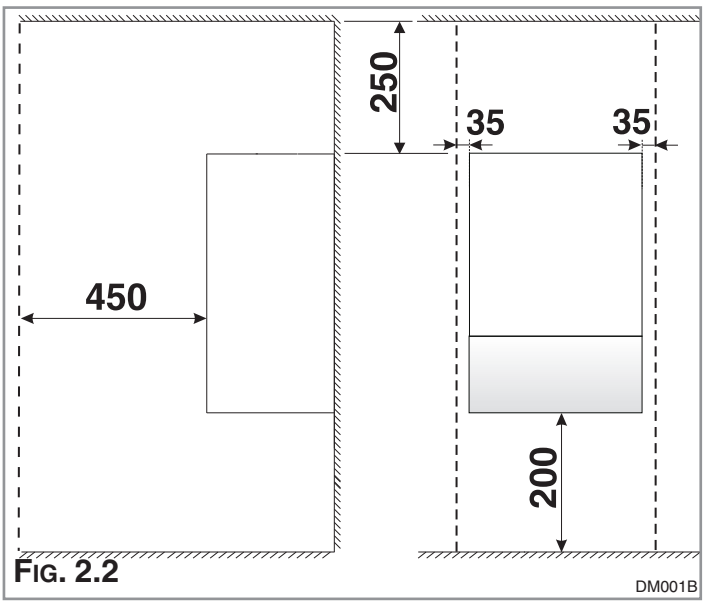

FIG. 2.2

2.4 CLEARANCES

In order to allow access to the interior of the boiler for maintenance purposes, the boiler must be installed in compliance with the minimum clearances indicated in **FIG. 2.2**

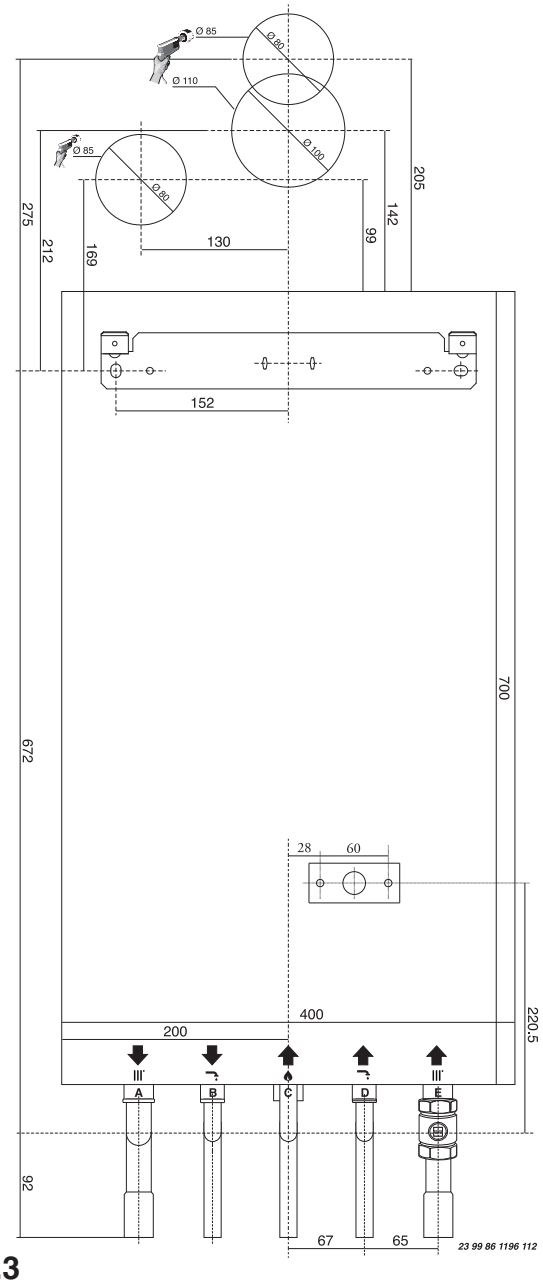

FIG. 2.3

2.5 MOUNTING THE APPLIANCE

After removing the boiler from its packaging, remove the template from the separate box containing the connection kit. NOTE: Pay particular attention to any test water that may spill from the appliance.

Place the template in the position the appliance is to be mounted and after ensuring it is hanging squarely, use it to drill the holes for the hanging bracket and flue pipe(s) **NB:** For further information relating to the flue installation please refer to Section 2.9 FLUE CONNECTION. (If the appliance is to be fitted on a wall of combustible material, the wall **must** be protected by a sheet of fireproof material).
If the appliance is to be fitted into a timber framed building, guidance should be sought from the Institute of Gas Engineers document REF: IGE/UP/7.

2.5.1. Drill the wall and plug using those supplied with the connections kit, position the bracket and secure with the wall bolts supplied. **NOTE:** It is highly recommended that a spirit level be used to position the appliance to ensure that it is perfectly level.

2.5.2. Position the appliance on the hanging bracket and connect the isolating valves supplied in the connection kit as shown on the wall template (see also Sections 2.7 Gas Connections, 2.8 Water Connections & FIG. 2.3).

2.6 ELECTRICAL CONNECTION

For safety purposes, have a competent person carefully check the electrical system in the property, as the manufacturer will not be held liable for damage caused by the failure to earth the appliance properly or by anomalies in the supply of power. Make sure that the residential electrical system is adequate for the maximum power absorbed by the unit, which is indicated on the rating plate. In addition, check that the section of cabling is appropriate for the power absorbed by the boiler.

The boiler operates with alternating current, as indicated in the Technical Information table in Section 10, where the maximum absorbed power is also indicated. Make sure that the connections for the neutral and live wires correspond to the indications in the diagram. The appliance electrical connections are situated on the reverse of the control panel.

IMPORTANT!
In the event that the power supply cord must be changed, replace it with one with the same specifications.
Note: The diagrams for the electrical system are indicated in section 2.13.

Warning, this appliance must be earthed.

External wiring to the appliance must be carried out by a competent person and be in accordance with the current I.E.E. Regulations and applicable local regulations.

The appliance is supplied with a fly-lead already connected, this must be connected to a 240v supply fused

at 3A and must facilitate complete electrical isolation of the appliance, by the use of a fused double pole isolator having a contact separation of at least 3 mm in all poles or alternatively, by **means of a 3 A** fused three pin plug and unswitched shuttered socket outlet both complying with BS 1363.
The point of connection to the Electricity supply must be readily accessible and adjacent to the appliance unless the appliance is installed in a bathroom when this must be sited outside the bathroom (see section 2.2).

Should external controls be required, the design of the external electrical circuits should be undertaken by a competent person, see section 2.12 for further information.

2.7 Gas Connection

The local gas region contractor connects the gas meter to the service pipe.
If the gas supply for the boiler serves other appliances ensure that an adequate supply is available both to the boiler and the other appliances when they are in use at the same time.
Pipe work must be of an adequate size. Pipes of a smaller size than the boiler inlet connection should not be used.

2.8 Water Connections

View of the Boiler Connections

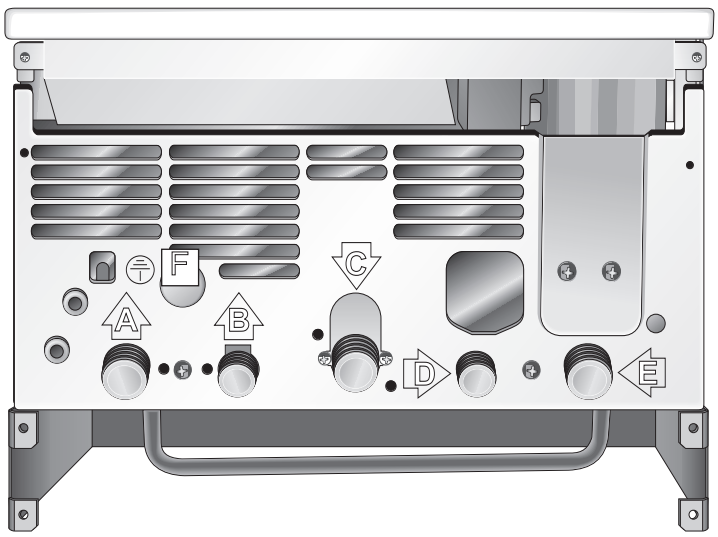

Fig. 2.4

SC005A

Legend:

A = Central Heating Flow
B = Domestic Hot Water Outlet
C = Gas Inlet
D = Domestic Cold Water Inlet
E = Central Heating Return
F = Safety Valve Outlet

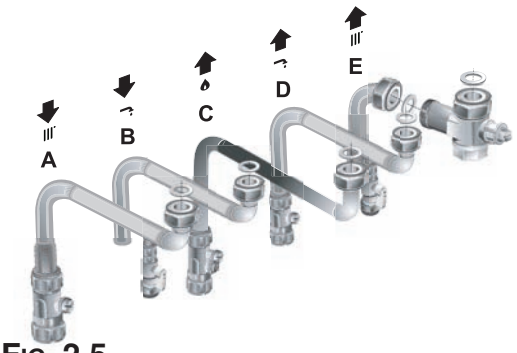

Fig. 2.5

KT007A

Pipe Work:
Copper tubing to BS EN 1057:1996 is recommended for water pipes. Jointing should be either with capillary soldered or compression fittings.
Where possible pipes should have a gradient to ensure air is carried naturally to air release points and water flows naturally to drain taps.
The appliance has a built-in automatic air release valve, however it should be ensured as far as possible that the appliance heat exchanger is not a natural collecting point for air.
Except where providing useful heat, pipes should be insulated to prevent heat loss and avoid freezing.

Particular attention should be paid to pipes passing through ventilated spaces in roofs and under floors.

By-pass:

The appliance includes an automatic by-pass valve, which protects the main heat exchanger in case of reduced or interrupted water circulation through the heating system, due to the closing of thermostatic valves or radiators.

System Design:

This boiler is suitable only for sealed systems.

Drain Cocks:

These must be located in accessible positions to permit the draining of the whole system and should be fitted at all low points. The taps must be at least 15mm nominal size and manufactured in accordance with BS 2870:1980.

Safety Valve Discharge:

The discharge should terminate facing downward on the exterior of the building in a position where discharging (possibly boiling water & steam) will not create danger or nuisance, but in an easily visible position, and not cause damage to electrical components and wiring.

The discharge must not be over an entrance or a window or any other type of public access.

Air Release Points:

These must be fitted at all high points where air naturally collects and must be sited to facilitate complete filling of the system.

The appliance has an integral sealed expansion vessel to accommodate the increase of water volume when the system is heated.

It can accept up to 6 litres (1.3 gal) of expansion water. If the heating circuit has an unusually high water content, calculate the total expansion and add an additional sealed expansion vessel with adequate capacity. This should be located on the return pipe work as close as possible to the pump inlet.

Mains Water Feed - Central Heating:

There must be no direct connection to the mains water supply even through a non-return valve, without the approval of the Local Water Authority, therefore a temporary method for initially filling the system and replacing lost water during servicing in accordance with current Water Regulations and bylaws must be provided **(Fig. 2.6).** Note: The installer should ensure that there are no leaks as frequent filling of the heating system can lead to premature scaling of the main exchanger and failure of hydraulic components.

Domestic Water:

The domestic water must be in accordance with the relevant recommendation of BS 5546:1990. Copper tubing to BS EN 1057:1996 is recommended for water carrying pipe work and must be used for pipe work carrying drinking water, a scale reducer should also be used to reduce the risk of scale forming in the domestic side of the heat exchanger.

Central Heating

Detailed recommendations are given in BS 6798:1987 and BS 5449-1:1990, the following notes are given for general guidance.

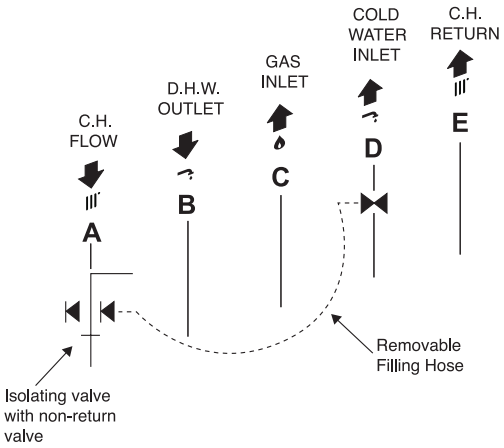

Fig. 2.6

Fill01

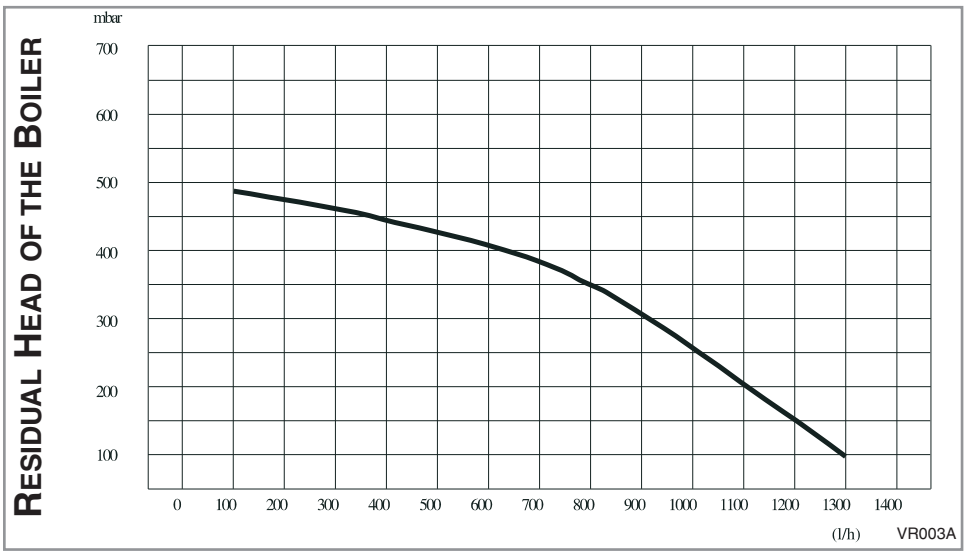

2.9 Flue Connections

IMPORTANT!

For all flue systems, a restrictor may need to be inserted into the exhaust manifold, the size of the restrictor and details of fitting requirements are shown in Table 2.1 (Page 16).

Flue System

The provision for satisfactory flue termination must be made in accordance with BS 5440-1.

The appliance must be installed so that the flue terminal is exposed to outside air.

The terminal must not discharge into another room or space such as an outhouse or lean-to.

It is important that the position of the terminal allows a free passage of air across it at all times.

The terminal should be located with due regard for the damage or discolouration that might occur on buildings in the vicinity and consideration must be given to adjacent boundaries.

In cold or humid weather water vapour may condense on leaving the flue terminal. The effect of such "pluming" must be considered.

If the terminal is less than 2 metres above a balcony, above ground or above a flat roof to which people have access, then a suitable terminal guard must be fitted. When ordering a terminal guard, quote the appliance model number.

A suitable terminal guard is available from:

TOWER FLUE COMPONENTS
Morley Road
Tonbridge
Kent TN9 1RA

The minimum acceptable spacing from the terminal to obstructions and ventilation openings are specified in **Fig. 2.7**.

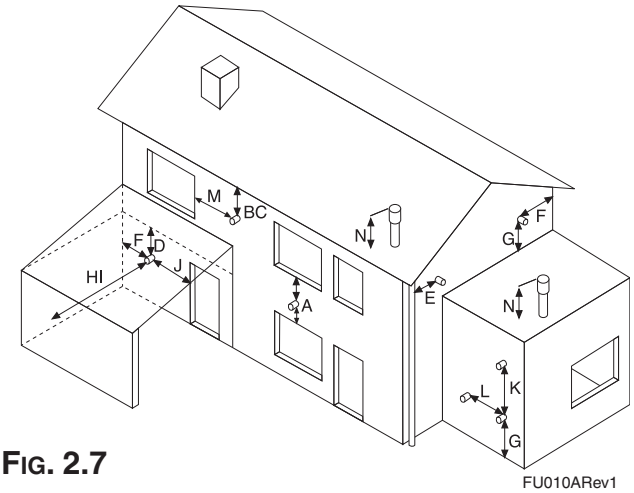

Fig. 2.7

Terminal Position		mm
A -	Directly below an openable window or other opening	300
B -	Below gutters, solid pipes or drain pipes	75
C -	Below eaves	200
D -	Below balconies or car-port roof	200
E -	From vertical drain pipes and soil pipes	150
F -	From internal or external corners	300
G -	Above ground or balcony level	300
H -	From a surface facing a terminal	600
I -	From a terminal facing a terminal	1200
J -	From an opening in the car port (e.g. door, window) into dwelling	1200
K -	Vertically from a terminal in the same wall	1500
L -	Horizontally from a terminal in the same wall	300
M -	Horizontally from an opening window	300
N -	Fixed by vertical flue terminal	

Note: The flue must not terminate in a place likely to cause nuisance

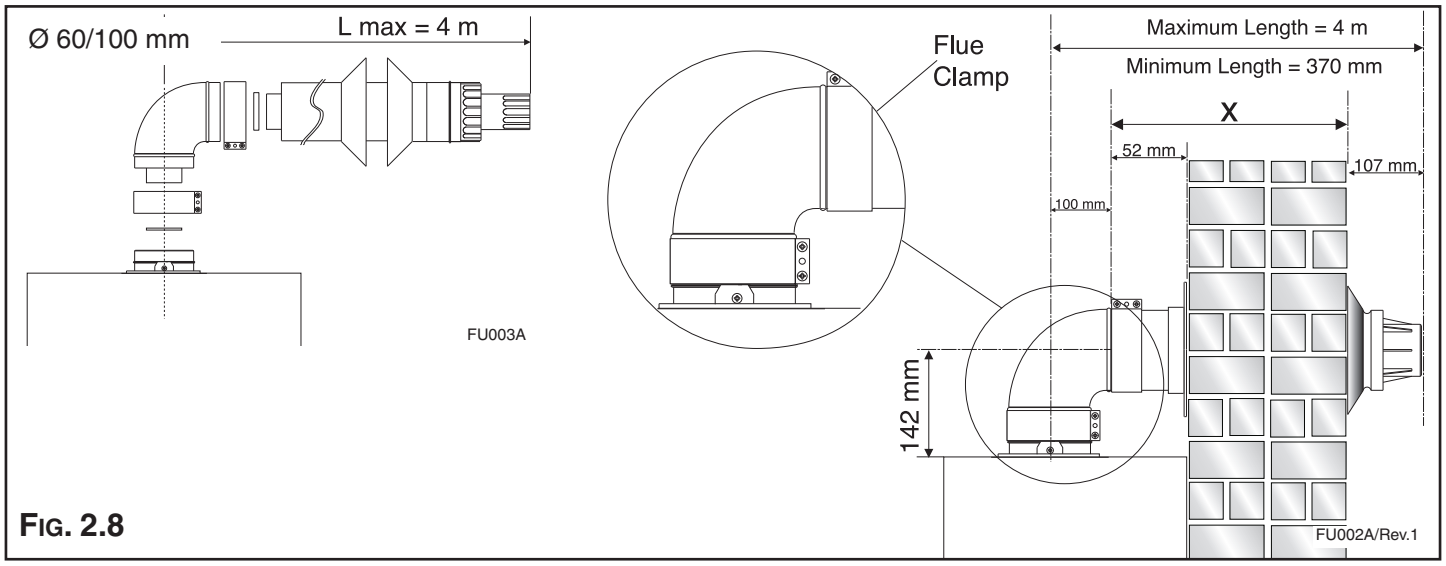

Fig. 2.8

Fitting the Coaxial Flue (Horizontal)
(For Telscopic Instructions see below and for Vertical Flue and Twin Pipe Instructions see page 12)

Contents:
1x Silicone O-Ring (60mm)
1x Elbow (90°)
2x Wall Seals (Internal & External)
1x Aluminium Flue Pipe including Terminal (1 metre - 60/100)
2x Flue Clamps
8x Screws
2x Seals

Once the boiler has been positioned on the wall, insert the elbow into the socket **(Fig 2.8)** and rotate to the required position. NOTE: It is possible to rotate the elbow 360° on its vertical axis.

Using the flue clamps, seals and screws supplied **(Fig 2.8)** secure the elbow to the boiler.

The 1 metre horizontal flue kit (705958) supplied is suitable for an exact **X dimension** of 823mm, and the 750mm horizontal flue kit (705785) is suitable for an exact **X dimension** of 573mm.

Measure the distance from the face of the external wall to the face of the flue elbow **(X - Fig 2.8),** add 22 mm to this measurement, you now have the total length of flue required (including the terminal), this figure must now be subtracted from 860mm, you now have the total amount to be cut from the plain end of the flue.

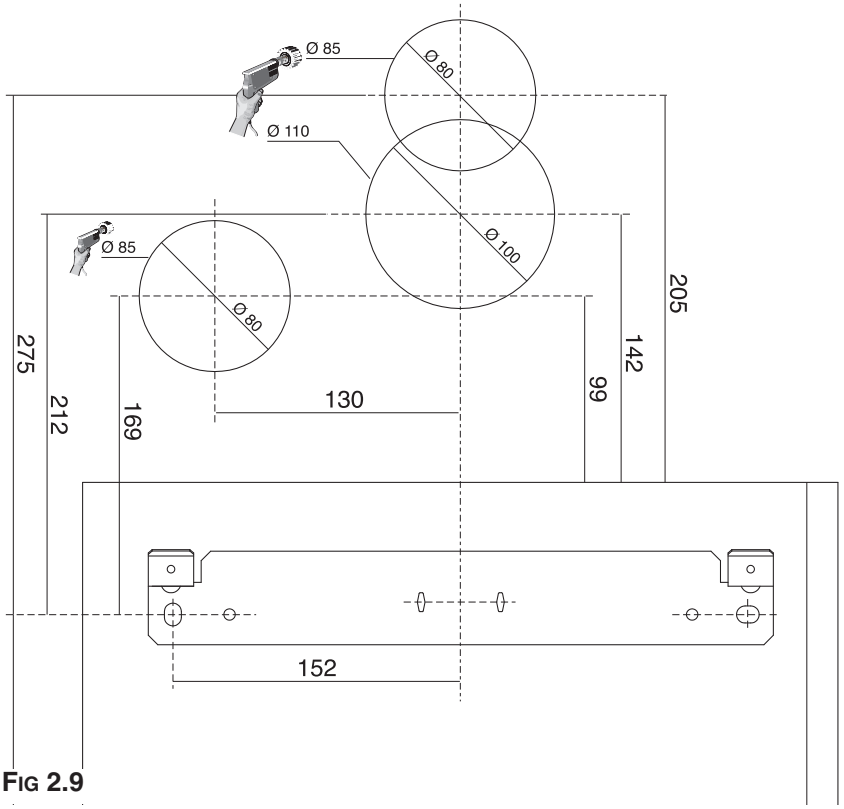

Fig 2.9

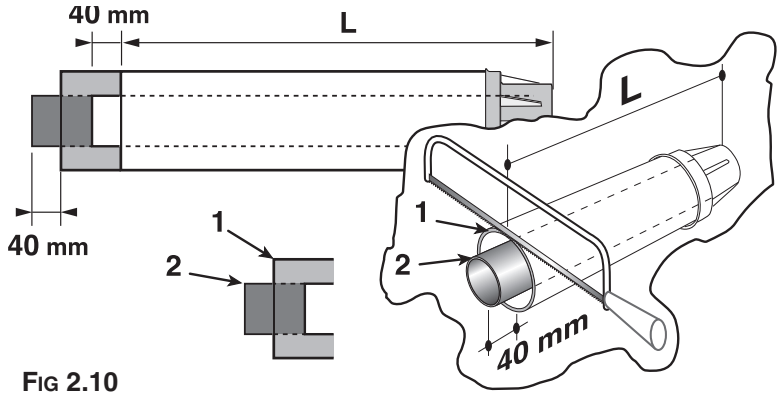

Fig 2.10

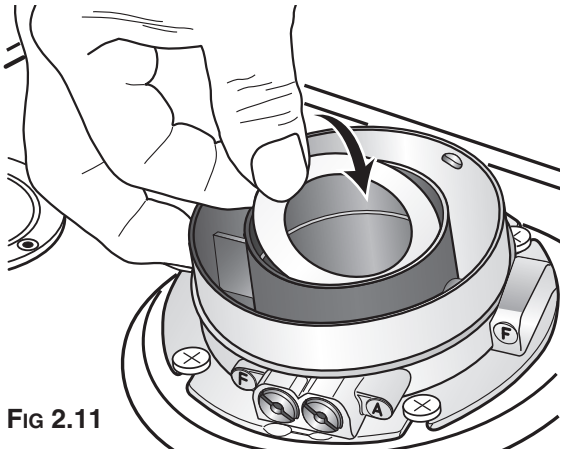

Fig 2.11

IMPORTANT!
For all flue systems, a restrictor may need to be inserted into the exhaust manifold, the size of the restrictor and details of fitting requirements are shown in Table 2.1 (Page 16).

Cut the flue to the required length ensuring that the distance between the inner and the outer flue is maintained **(Fig 2.10)**.
e.g. X = 508mm + 22mm = 530mm
860 - 530 = 330mm (Length to be cut from the plain end of the flue).

Once cut to the required length, ensure that the flue is free from burrs and reassemble the flue. If fitting the flue from inside of the building attach the grey outer wall seal to the flue terminal and push through the flue through the hole, once the wall seal has passed through the hole, pull the flue back until the seal is flush with the wall. Alternatively, the flue can be installed from outside of the building, the grey outer seal being fitted last.

Fitting the Telescopic Flue Kit (Horizontal)

Contents:
1x Silicone O-Ring (60mm)
1x Elbow (90°)
2x Wall Seals (Internal & External)

1x Aluminium Flue Pipe including Terminal (Telescopic - 60/100)
2x Flue Clamps
8x Screws
2x Seals

The telscopic flue is suitable for use with an exact minimum **X dimension** of 270mm and an exact maximum **X dimension** 470mm.

IMPORTANT!!
Do not extend the telescopic flue to an X dimension of more than 470mm. If longer lengths are required use extension pieces as necessary. Under no circumstances must the flue be cut.
The wall must then be made good around the flue (ensuring a fall of 1° is maintained away from the boiler to the flue terminal).
Once made good, place the inner (white) wall seal over the flue and push up to the wall, secure the flue to the elbow by using the clamp supplied.

For each additional 90° elbow 1 metre must be removed from the total flue length (maximum 4 metres including the 1st elbow). For each additional 45° elbow 0.5 metre must be subtracted from the total flue length (**Fig 2.13**).

Fitting the Coaxial Flue (Vertical)
(For Twin Pipe Instructions see page 13)

Contents:
1x Silicone O-Ring (60mm)
1x Conical Adaptor (60/100mm)
1x Vertical Flue Kit (80/125mm)
3x Screws

The vertical flue kit is supplied with a specially designed weather proof terminal fitted, it can be used either with a flat roof or a pitched roof. (see **Figs 2.12, 2.13**).

The Vertical flue kits maximum and minimum useable lengths with both flat and pitched roof flashings are indicated in **(Figs. 2.14 & 2.15).**

Before proceeding to fit the flue, ensure that the maximum flue length has not been exceeded and that all elbows and bends have been taken into consideration, the maximum flue length is 4 metres, for each additional 90° elbow 1 metre must be subtracted from the total flue length, and for each 45° 0.5 metres must be subtracted from the total flue length **(the offset and height of 2 x 45° can be seen in Fig. 2.16).**

Mark the position of the flue hole in the ceiling and/or roof **(see Fig. 2.14 for distance from wall to the centre of the flue).**

Cut a 110mm diameter hole through the ceiling and/or roof and fit the flashing plate to the roof.
Should it be necessary to cut the flue ***DO NOT*** cut the outer white ar inlet tube, cut the aluminium exhaust flue 6mm longer than the outer white air tube when used at minimum length. ***DO NOT*** cut more that 250mm from the

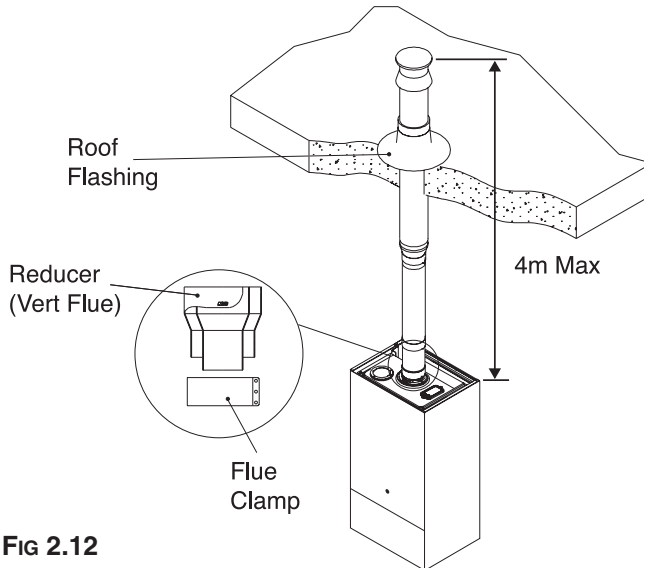

Fig 2.12

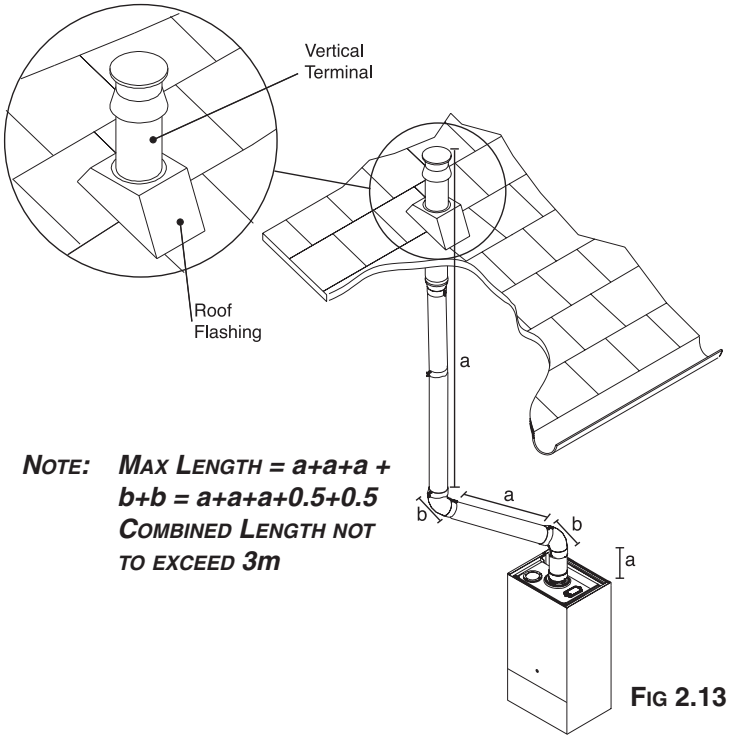

Note: ***Max Length = a+a+a + b+b = a+a+a+0.5+0.5 Combined Length not to exceed 3m***

Fig 2.13

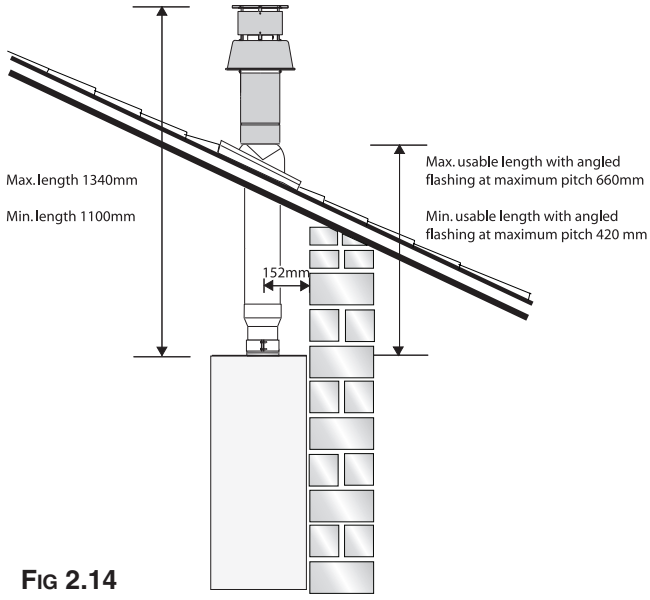

Fig 2.14

inner aluminium exhaust flue.

To connect the vertical flue kit directly to the boiler, place the adaptor **(see Fig 2.12)** (supplied with vertical flue kit) onto the exhaust manifold and secure with the clamp, the vertical flue kit must then be inserted through the roof flashing, this will ensure that the correct clearance above the roof is provided as the terminal is a fixed height.

Should extensions be required, they are available in 1 metre **(Part No. 705786)**, 500mm **(Part No. 705790)** and 160mm lengths **(Part No. 705812)**, they must be connected directly to the boiler and secured with the clamp supplied before connecting the adaptor to allow the vertical flue kit to be fitted. In the event that extension pieces need to be shortened, they ***must*** only be cut at the male end and it must be ensured that the distance between the inner and outer flue are kept **(Fig. 2.10).**

When utilising the vertical flue system, action must be taken to ensure that the flue is supported adequately to prevent the weight being transferred to the appliance flue connection.

When the flue passes through a ceiling or wooden floor, there must be an air gap of 25mm between any part of the flue system and any combustible material. The use of a ceiling plate will facilitate this. Also when the flue passes from one room to another a fire stop must be fitted to prevent the passage of smoke or fire, irrespective of the structural material through which the flue passes.

Fitting the Flue (Twin Pipe)

Where it is not possible to terminate the flue within the distance permitted for coaxial flues, the twin flue pipe can be used by fitting a special adaptor to the flue connector and using the aperture for the air intake located on top of the combustion chamber.

Considerations necessary for twin flue installation;

It is most important to avoid any possible condense formation entering the appliance.

According to Table 2.1 **(Page 16)** decide if condensation will form within the flue. If yes, there are two options;

1) Where condense will form but can be negated with insulated flue, install insulated the flue with a fall of 5mm in every metre away from the boiler.

2) The exhaust flue will have a fall of 3° back to the boiler and a suitable trap will be fitted on the exhaust as close to the boiler as possible, condense will then be suitably disposed of.

Where the flue runs through cold spots, i.e. loft areas, condense is likely to be formed, therefore a fall back to the boiler and a trap is required.
Always ensure that the flue is adequately supported, avoiding low points. (MTS supply suitable clamps as Part No. 705778).

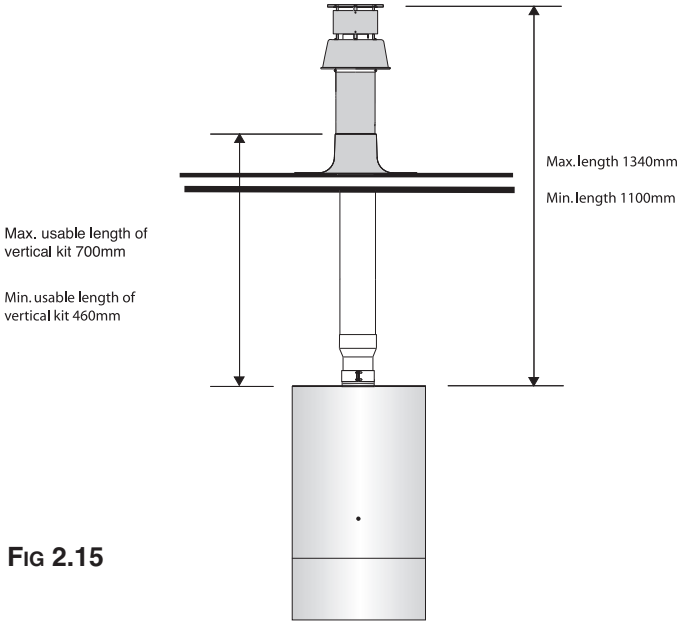

Fig 2.15

IMPORTANT!

For all flue systems, a restrictor may need to be inserted into the exhaust manifold, the size of the restrictor and details of fitting requirements are shown in Table 2.1 (Page 16).

Minimum offset distance when using 2x 45° bends

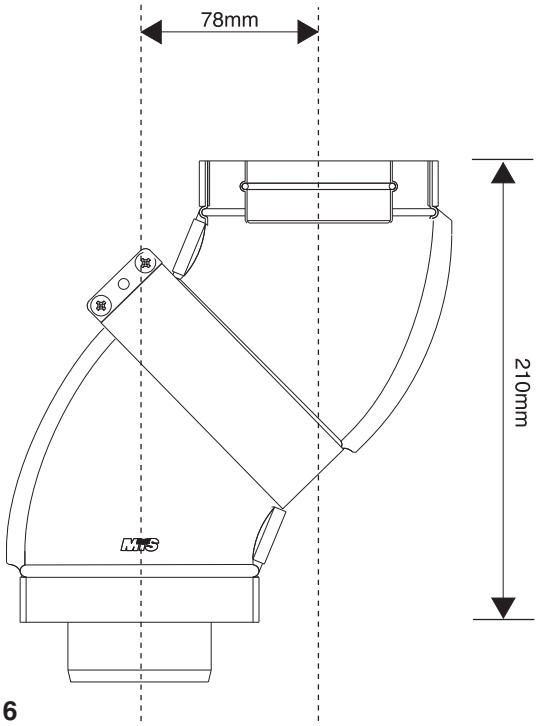

Fig 2.16

To utilise the air intake it is necessary to:

Remove the 'knockout' of the air intake by cutting it with a suitable knife **(Fig. 2.16)**.

Insert the elbow/flue pipe into the air intake until it stops.

The twin flue pipes can be fitted with or without additional elbows and need no clamps, simply ensure that the red o-ring is inserted in the female end of the flue pipe and push the extension piece fully into the previous section of flue pipe or elbow, check that the o-ring is not dislodged when assembling the flue.

Twin pipe can also be converted back to Coaxial flue to enable vertical termination with a coaxial kit by using the pipe bridge (Twin - Coaxial Adaptor - Part No. 705767). When running the twin flue pipe vertically, a condense trap must always be used on the exhaust pipe.

It is not recommended that the pipe bridge for horizontal termination, however in the unlikely event that this proves to be a necessity it is extremely important that the entire flue has a fall of 3° back to the boiler, is suitably trapped and where the 60mm inner flue of the concentric terminal connects to the pipe bridge, this point must be adequately sealed with silicone sealant to avoid condense leakage at this point.

Note: Vertical twin flue installations must have a trap on the exhaust. MTS supply a suitable condense trap Part No. 705774 and recommend that this be used in the event that the flue may not form condense.

When siting the twin flue pipe, the air intake and exhaust terminals must terminate on the same wall, the centres of the terminals **must** be a minimum of 280 mm apart and the air intake **must** not be sited above the exhaust terminal **(refer to Fig. 2.20)**. The air intake pipe can be run horizontally, however, the terminal and the final 1 metre of flue must be installed with a fall away from the boiler to avoid rain ingress.

It is also strongly recommended that the air intake pipe run be constructed of insulated pipe to prevent condense forming on the outside of the tube.

The maximum permissible flue length for twin flue is dependent on the type of run used.

For flue runs with the intake and exhaust pipes under the same atmospheric conditions (Type 4) the maximum length is 43 metres (23kW) and 28 metres (27kW), for runs with the terminals under different atmospheric conditions (Type 5) the exhaust terminal **must** extend 0.5 metres above the ridge of the roof (this is not obligatory if the exhaust and air intake pipes are located on the sa,e side of the building). For Type 5 also, the maximum permissible combined length is 40 metres.

The maximum length is reached by combining the total lengths of both the air intake and exhaust pipes. Therefore a maximum length of 40 metres for example, will allow a flue run of 20 metres for the air intake and 20 metres for the exhaust pipes, also for each 90° elbow 1.3 metres must be subtracted from the total length and for each 45° elbow 1 metre must be subtracted from the total flue length.
Some of the acceptable flue configurations are detailed on below **(Fig. 2.19)**.

For further information relating to flue runs not illustrated, please contact the Technical Department on 01494 539579.

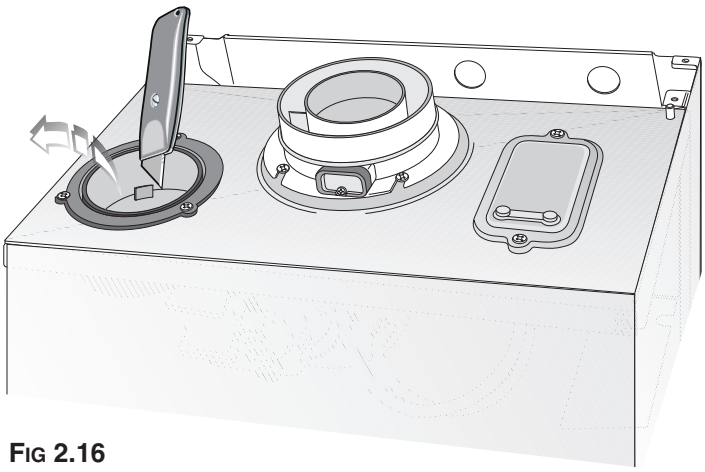

Fig 2.16

IMPORTANT!!!

Where condense will form within the flue system, ensure there is a fall back to the boiler of 3° and a suitable trap is fitted as close to the boiler as possible. MTS supply a suitable collector Part No. 705798 or a condensate discharge T with built in trap Part No. 705774.

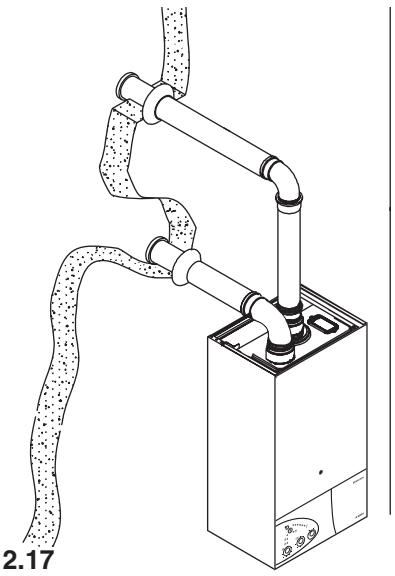

Fig 2.17

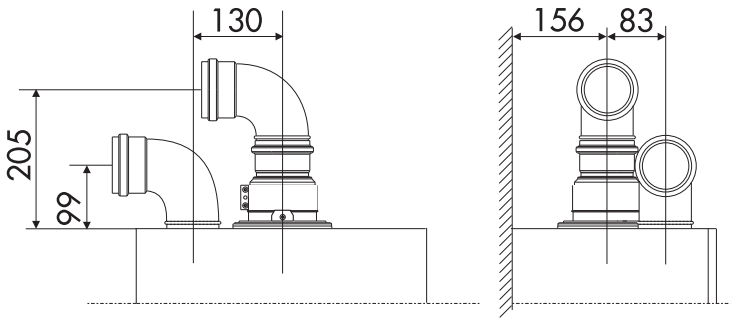

Fig 2.18

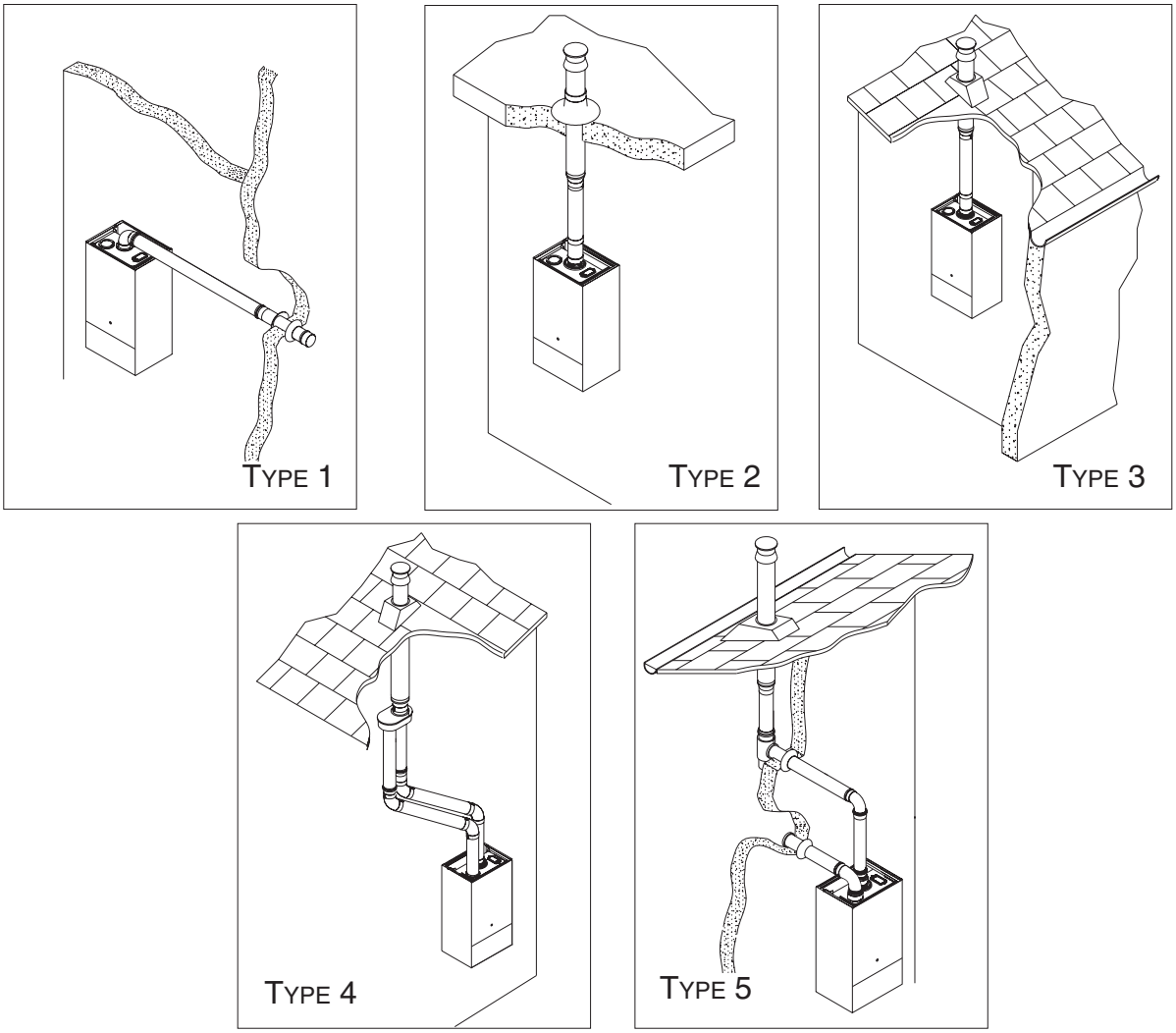

FIG. 2.19

NOTE: DRAWINGS ARE INDICATIVE OF FLUEING OPTIONS ONLY.

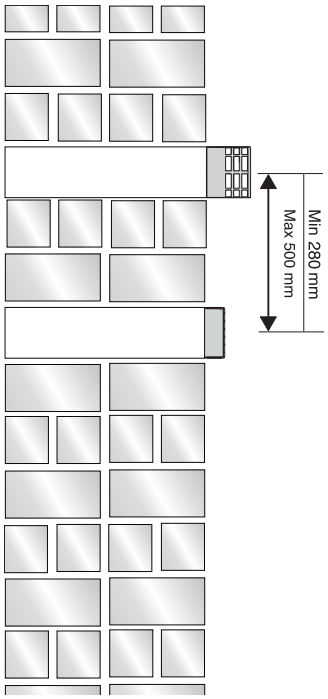

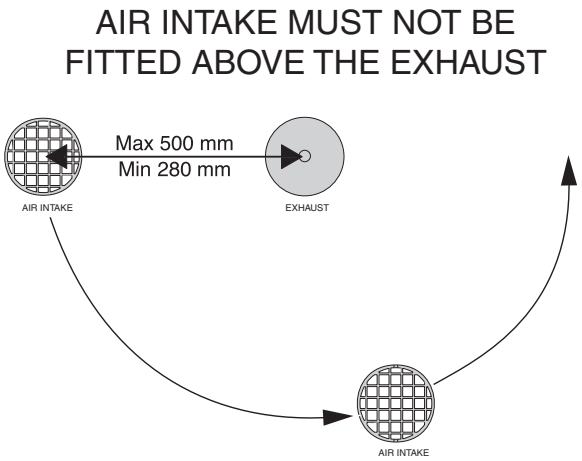

FIG 2.20

micro Combi 23 MFFI

TABLE 2.1

	Exhaust Type	Use the ø 43 mm Restrictor	Do not use the Restrictor	Maximum Flue Length	Risk of Condensation Forming			
Coaxial Systems ø 60/100	TYPE 1 TYPE 2 TYPE 3	Between 0.5 m - 2 m	Between 2 m - 4 m	4 m	**NOT APPLICABLE**		**NOT APPLICABLE**	
	Exhaust Type	**Use the ø 43 mm Restrictor**	**Do not use the Restrictor**	**Maximum Flue Length**	**Risk of Condensation Forming With: Standard Twin Pipe After:**		**Insulated Twin Pipe After:**	
Twin Pipe Systems ø 80/80	TYPE 4	Up to 11.5 m	Between 11.5 m - 43 m	43 m	4.3 m with a ø 43 mm restrictor	6.9 m without a ø 43 mm restrictor	N/A*	N/A*
	TYPE 5	Up to 11.4 m	Between 11.4 m - 40 m	40 m			5.7 m* with a ø 43 mm restrictor	21.7 m* without a ø 43 mm restrictor

micro Combi 27 MFFI

	Exhaust Type	Use the ø 45 mm Restrictor	Do not use the Restrictor	Maximum Flue Length	Risk of Condensation Forming			
Coaxial Systems ø 60/100	TYPE 1 TYPE 2 TYPE 3	Between 345 mm - 1 m	Between 1 m - 4 m	4 m	**NOT APPLICABLE**		**NOT APPLICABLE**	
	Exhaust Type	**Use the ø 45 mm Restrictor**	**Do not use the Restrictor**	**Maximum Flue Length**	**Risk of Condensation Forming With: Standard Twin Pipe After:**		**Insulated Twin Pipe After:**	
Twin Pipe Systems ø 80/80	TYPE 4	Up to 14 m	Between 14 m - 28 m	28 m	7 m with a ø 45 mm restrictor	7 m without a ø 45 mm restrictor	10 m* with a ø 45 mm restrictor	24 m* without a ø 45 mm restrictor
	TYPE 5	Up to 21 m	Between 21 m - 51 m	51 m			24 m* with a ø 45 mm restrictor	28 m* without a ø 45 mm restrictor

* Where there is no risk of condense forming (and, therefore no requirement for a condense collector), ensure a minimum fall of 5mm per metre away from the appliance.

NOTE: UNDER SOME CIRCUMSTANCES, CONDENSE MAY FORM AT THE EXHAUST TERMINAL, SPECIAL ATTENTION MUST BE PAID WITH REGARD TO POSSIBLE CONDENSE DRIPPING FROM THE TERMINAL.

2.10 Control Panel

Legend:

A - On/Off button
B - Central heating temperature adjustment
C - Domestic hot water temperature adjustment
D - Heating system pressure gauge
E - Time clock
F - Central heating selector
G - Central heating L.E.D. (green)
H - Flue sensor L.E.D. (yellow)
I - Overheat and/or ignition failure (lockout) L.E.D. (red)
J - Ignition failure (lockout) and/or overheat reset button/Flue Test analysis mode*
K- ON/OFF L.E.D. (green)

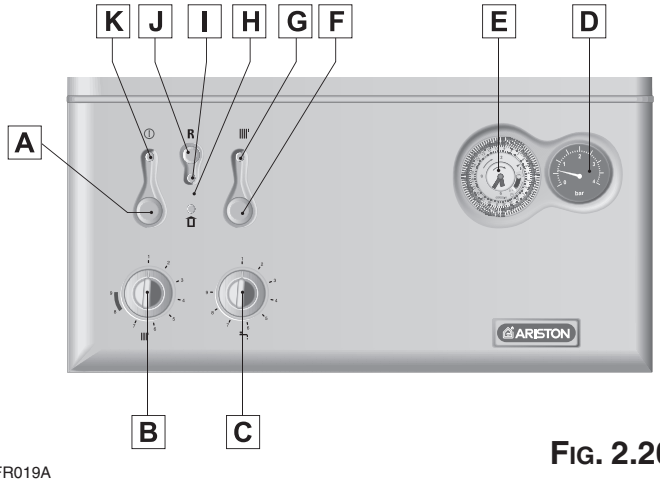

Fig. 2.20

* *Warning the flue analysis mode must only be selected by a qualified service engineer.*

2.11 Removing the Front Panel

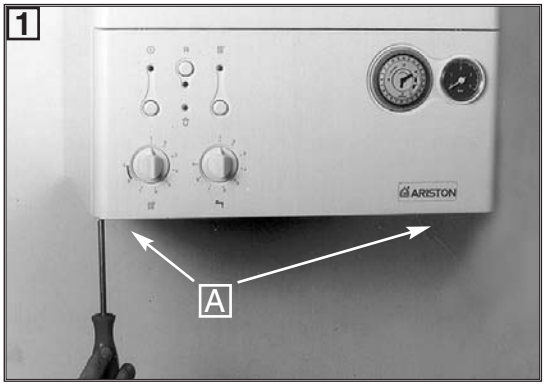

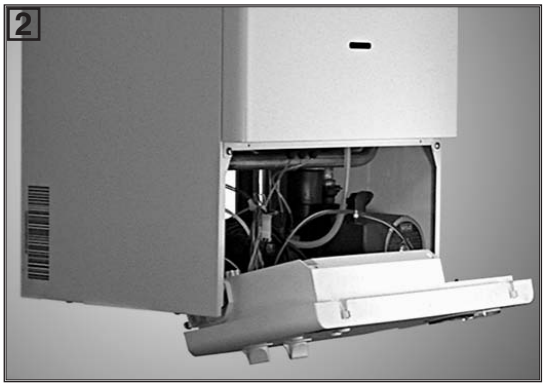

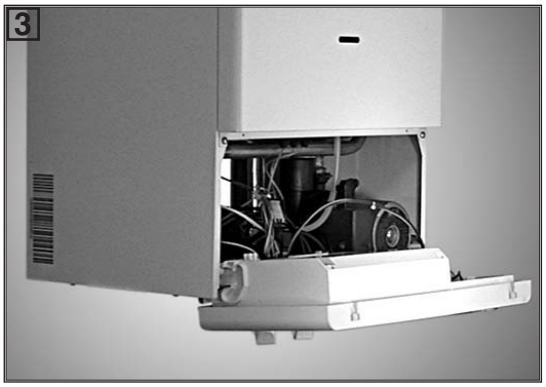

In order to access the inside of the boiler, it is necessary to unscrew the fastening screws **"A"** of the control panel located on the lower part of the panel itself.
The control panel moves downward and when pulled forward rotates on two lateral hinges.
The panel stays in a semi-horizontal position, which allows access to the inner parts of the boiler.
In order to increase the manouvering space, it is possible to raise the control panel and rotate it to a fully horizontal position.

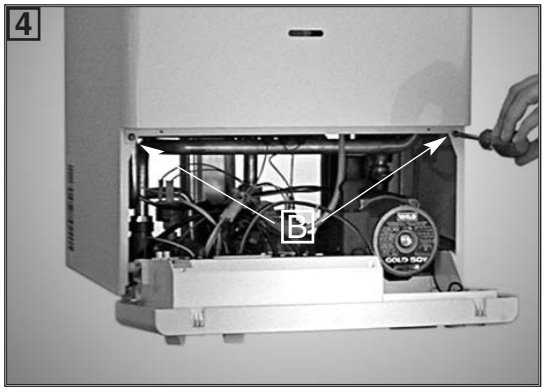

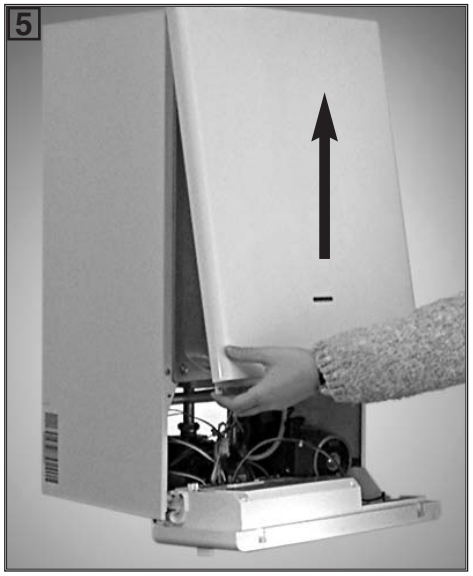

To dismantle the front casing panel it is necessary to:

1 - Remove the two screws **"B"**;
2 - Move the front casing panel up and lift forward.

2.12 Room Thermostat Connection

To connect a room thermostat, it is necessary to:

1. - Open the control panel as indicated in **section 2.11**.
2.- Remove the link **"A"** from the terminal block on the reverse of the control panel.
3. - Insert the thermostat cable through the cable grommet and fasten it by means of the cable-clamp provided.
4. - Connect the thermostat wires to the terminal block **(Diagram A).**
5.- If a remote time clock is to be fitted, disconnect the integral time clock from the P.C.B.
6. - Using a volt-free switching time clock, connect the switching wires from the time clock following points 1-4 above **(Diagram B).**
7. - If using an external time clock and room thermostat, these must be connected in series as points 1-7 above **(Diagram C).**

Note: Only a low voltage room thermostat capable of volt free switching must be used. Factory fitted integral wiring must not be disturbed when wiring external controls.

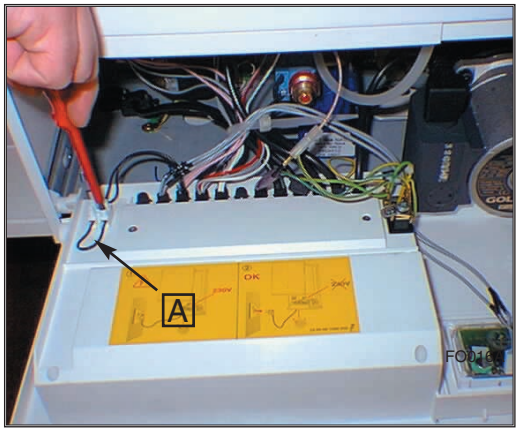

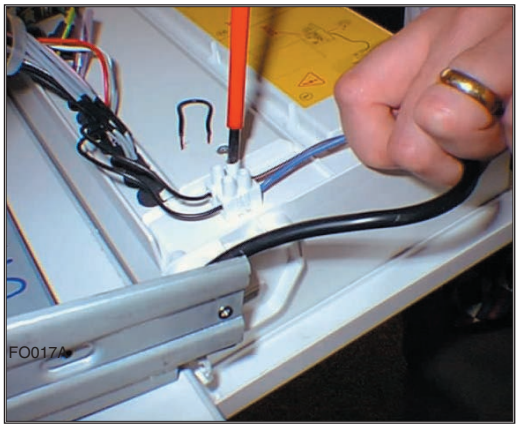

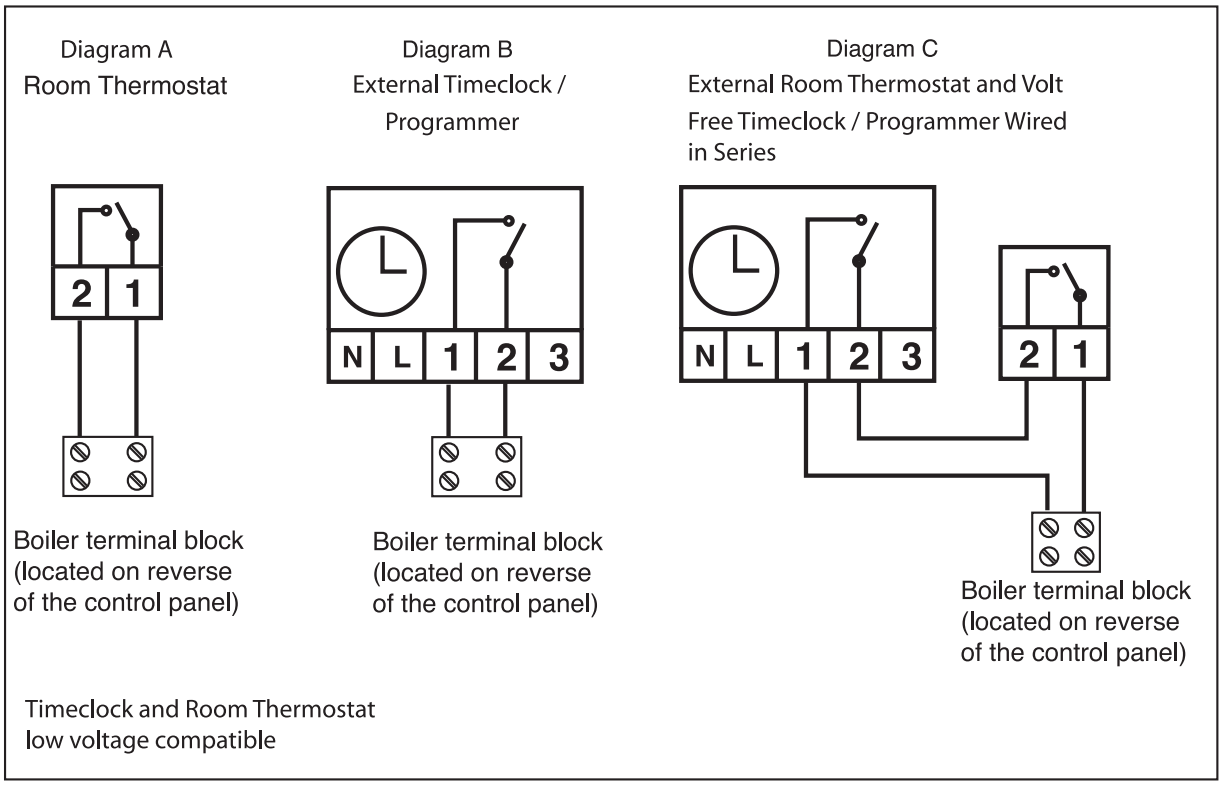

Fig. 2.21

2.13 Electrical/System Diagrams

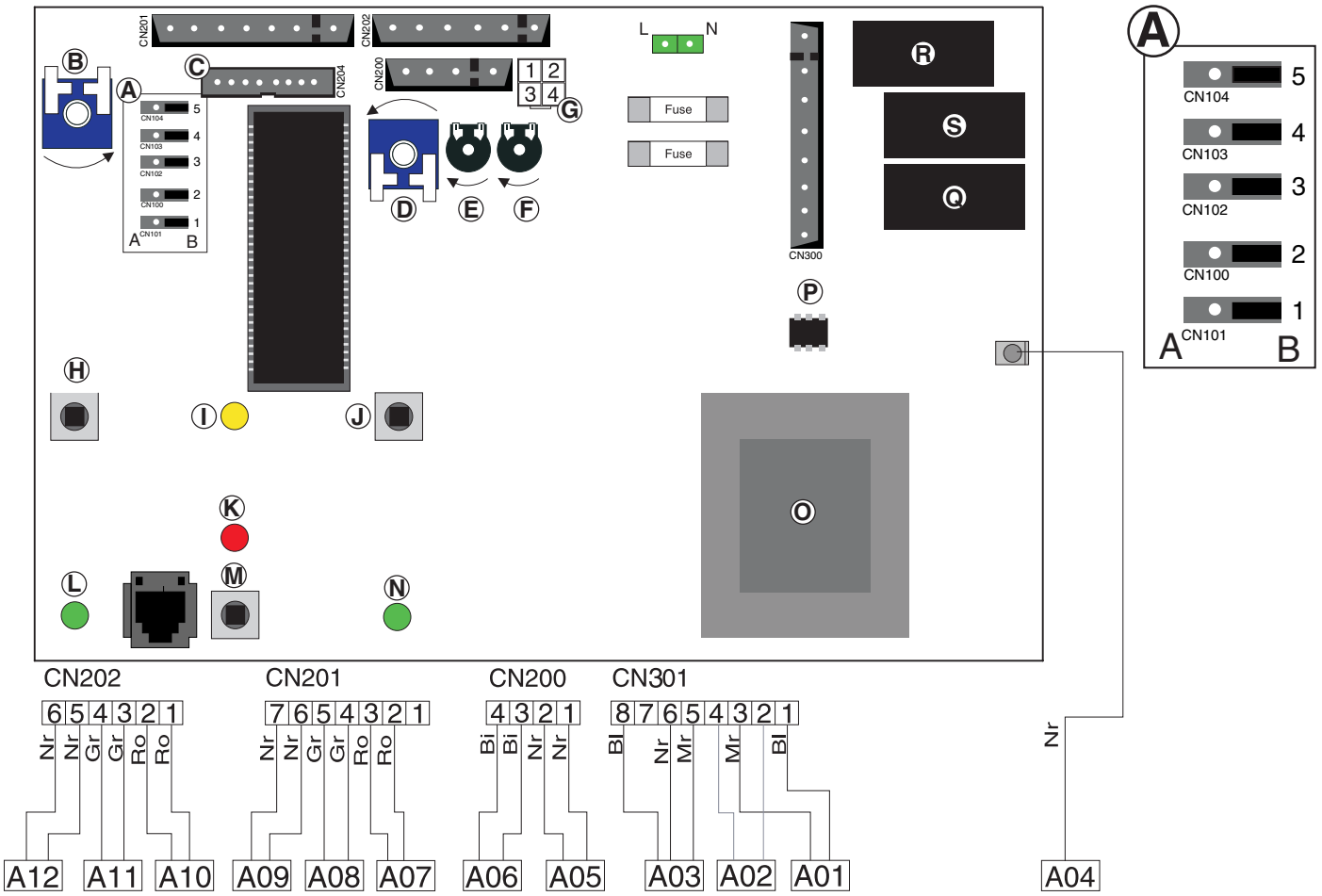

Fig. 2.22

A - Jumper:
- *1 - Don't move (jumper is factory set in position B)*
- *2 - Anti-cycling Device Adjustment for Heating*
  Position A = 0 mins Position B = 2 mins
- *3 - Don't move (jumper is factory set in position B)*
- *4 - Don't move (jumper is factory set in position B)*
- *5 - Fan/Pump over-run selector*
  Position A = OFF Position B = ON

B - Central Heating Temperature Adjustment
C - Connector for Remote Control (Climate Manager)
D - Domestic Hot Water Temperature Adjustment
E - Soft-light Adjustment
F - Maximum Heating Adjustment
G - Time Clock Connector
H - On/Off Switch
I - Fume Sensor L.E.D.
J - Central Heating Selector
K - Ignition Failure (Lockout) L.E.D.
L - On/Off L.E.D.
M - Reset Button
N - Central Heating L.E.D.
O - Transformer
P - Spark Generator I.C.
Q- Gas Valve Relay
R - Circulation Pump Relay
S - Fan Relay

A01 - Circulation Pump
A02 - Fan
A03 - Spark Generator/Gas Valve Supply
A04 - Detection Electrode
A05 - Main Circuit Temperature Probe
A06 - Domestic Hot Water Temperature Probe
A07 - D.H.W. Flow switch
A08 - Pump Pressure Switch
A09 - Modulator
A10 - Air Pressure Switch
A11 - Safety Thermostat
A12 - External (Room) Thermostat

COLOURS:

Gr - Grey
Bi - White
Rs - Red
Mr - Brown
Bl - Blue
Nr - Black
Ro - Pink

2.14 Water Circuit Diagram

Fig. 2.23

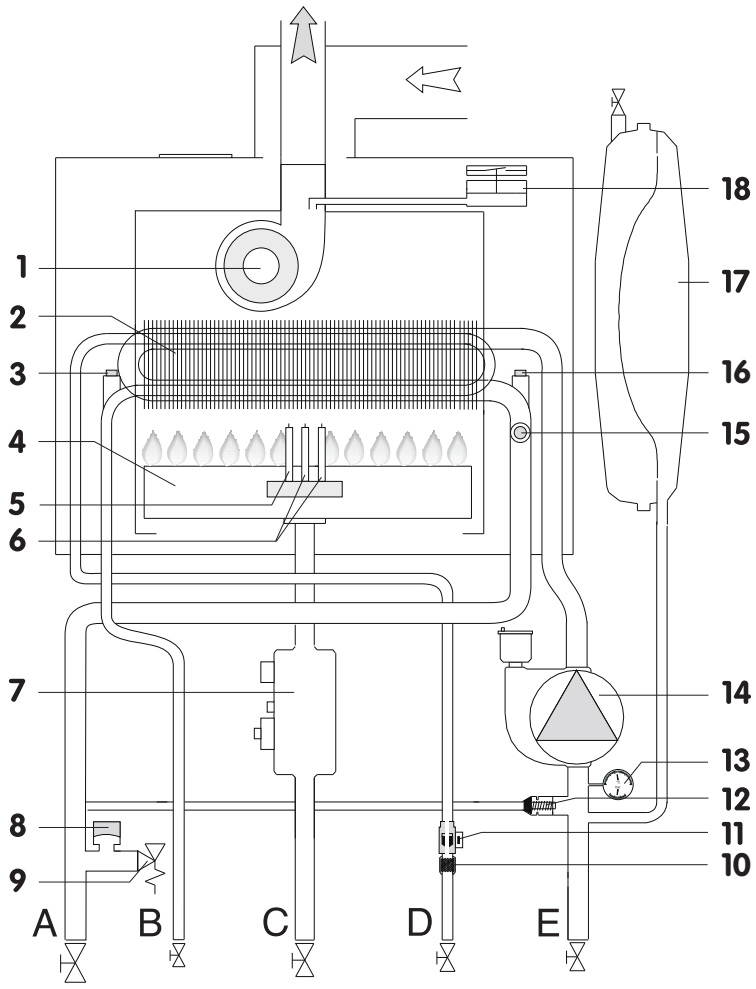

Legend:

1. Fan
2. “Twin-pass” Heat Exchanger
3. Domestic Hot Water Temperature Probe
4. Burner
5. Detection Electrode
6. Ignition Electrodes
7. Gas Valve
8. Pump pressure switch
9. Safety Valve
10. D.H.W. inlet filter
11. D.H.W. Flow Switch
12. Automatic By-pass
13. Pressure Gauge
14. Circulation Pump with Automatic Air Release Valve
15. Overheat Thermostat
16. Main Circuit Temperature Probe
17. Expansion Vessel
18. Air Pressure Switch

A. Central Heating Flow
B. Domestic Hot Water Outlet
C. Gas Inlet
D. Domestic Cold Water Inlet
E. Central Heating Return

3. COMMISSIONING

3.1 INITIAL PREPARATION

MTS (GB) Limited support the benchmark initiative. Within the information pack you will find a copy of the benchmark logbook. It is important that this is completed in the presence of your customer, they are shown how to use it, and it is signed by them. Please instruct your customer that they must have their benchmark logbook with them whenever they contact a service engineer or us.

Preliminary electrical system checks to ensure electrical safety must be carried out by a competent person i.e. polarity, earth continuity, resistance to earth and short circuit.

FILLING THE HEATING SYSTEM:

Lower the control panel and remove the case panels (see **SECTION 2.11** for further information).
Open the central heating flow and return cocks supplied with the connection kit (there are two isolation points on the return connection).
Unscrew the cap on the automatic air release valve one full turn and leave open permanently.
Close all air release valves on the central heating system.
Gradually open valve(s) at the filling point (filling-loop) connection to the central heating system until water is heard to flow, do not open fully.
Open each air release tap starting with the lowest point and close them only when clear water, free of air, is visible.
Purge the air from the pump by unscrewing the pump plug anticlockwise, also manually rotate the pump shaft in the direction indicated by the pump label to ensure the pump is free.
Refit the pump plug.
Continue filling the system until at least 1.5 bar registers on the pressure gauge.
Inspect the system for water soundness and remedy any leaks discovered.

FILLING OF THE D.H.W. SYSTEM:

Close all hot water draw-off taps.
Open the cold water inlet cock supplied with the connection kit.
Open slowly each draw-off tap and close them only when clear water, free of bubbles, is visible.

GAS SUPPLY:

Inspect the entire installation including the gas meter, test for tightness and purge the supply as described in BS 6891:1988.
Open the gas cock (supplied with the connection kit) to the appliance and check the gas connections on the appliance for leaks.

When the installation and filling are completed, flush the system while cold, refill, turn on the Central Heating system (**SECTION 3.2**) and run it until the temperature has reached the boiler operating temperature. The system must then be immediately flushed through.
The flushing procedure must be in line with BS 7593:1992 code of practice for treatment of water in domestic hot water central heating systems.
During this operation, we highly recommend the use of a central heating flushing detergent (Fernox Superfloc or equivalent), whose function is to dissolve any foreign matter that may be in the system.
Substances different from these could create serious problems to the pump or other components.
The use of an inhibitor in the system such as Fernox MB-1 or equivalent is strongly recommended to prevent corrosion (*sludge*) damaging the boiler and system.
Failure to carry out this procedure may invalidate the appliance warranty.

3.2 Initial Start-up

The checks to be run before initial start-up are as follows:

1. Make sure that:
   - the screw on the automatic air valve has been loosened when the system is full;
   - If the water pressure in the system is below 1.5 bar, bring it up to the appropriate level;
   - Ensure that the gas cock is closed;
   - Make sure that the electrical connection has been made properly and that the earth wire is connected to an efficient earthing system;
   - Supply power to the boiler by pushing the On/Off button **"A"** (see **Fig. 2.16**) - the L.E.D. **"K"** will illuminate. Then push the button **"F"** in for central heating - the L.E.D. **"G"** will illuminate. This will start the circulation pump. After 7 seconds, the boiler will signal a shutdown due to ignition failure. Leave the boiler as it is until all of the air has been bled from the system.
   - Loosen the cap on the head of the pump to eliminate any air pockets;
   - Repeat the procedure for bleeding the radiators of air;
   - Open the taps for a brief period;
   - Check the system pressure and, if it has dropped, open the filling loop again to bring the pressure back up to 1.5 bar.
2. Make sure that all gate valves are open;
3. Turn on the gas cock and check the seals on the connections with an approved soap solution and eliminate any leaks.
4. Press the reset button **"J"** for the lighting system; the spark will light the main burner. If the burner does not light the first time, wait 1 minute and repeat the procedure.
5. Check the minimum and maximum burner pressure values; adjust if needed using the values indicated in the table in **Section 4**.

3.3 Operational Adjustments

To access the areas in which adjustments are made, it is necessary to open the control panel, as indicated in **Section 2.11**, then remove the rear inspection cover by unscrewing the two screws. Access is thereby provided to the P.C.B. and to the following components:

1. The power supply cable connector;
2. The fuses;
3. The soft-light potentiometer the setting for which can range from the minimum thermal power to the maximum;
4. The maximum thermal heating power potentiometer adjustable by the minimum to maximum power (already calibrated in the factory to 70% of the maximum thermal power);
5. The jumper for adjusting the ignition delay (anti-cycling) feature, which can be set from 0 to 2 minutes (set in the factory at one minute);
6. Fan/Pump Over-run (Electrical Diagram). When the jumper is set to position A the Fan and Pump over-run is activated. (The jumper is factory set in position B)
7. The time clock connector.

3.4 Combustion Analysis

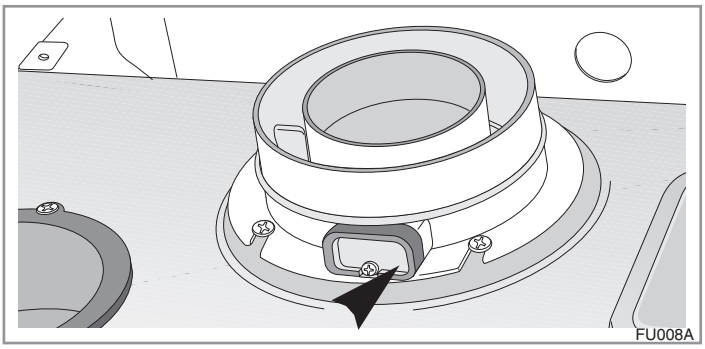

The flue connector has two apertures, readings can be taken for the temperature of the combustion by-products and of the combustion air, as well as of the concentrations of O_2 and CO_2, etc.
To access these intakes it is necessary to unscrew the front screw and remove the metal plate with sealing gasket.
It is possible to activate the flue test mode (maximum output) by pressing and holding the RESET button **"J"** for 10 seconds, the yellow L.E.D. "**H**" will light. The boiler will return to normal operation after 5 minutes. The boiler can be returned to normal operation sooner by switching the boiler off and on again.

3.5 Product of Combustion Discharge Monitoring

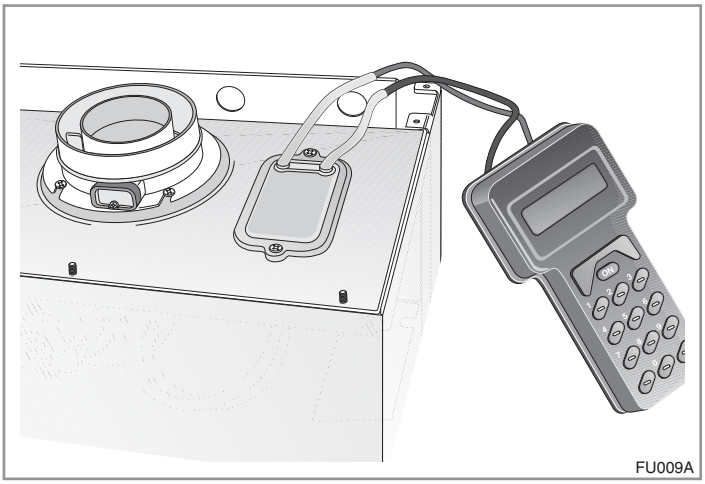

In the boiler, it is possible to monitor the correct operation of the flue exhaust/air intake, checking for a loss of general pressure in the system. Through the use of a differential manometer connected to the test points of the combustion chamber, it is possible to detect the ΔP of operation of the air pressure switch.
The value detected should not be less than 0.55 mbar (23 Kw) - 0.90 mbar (27Kw) under conditions of maximum thermal power in order for the boiler to function properly and without interruption.

3.6 Boiler Safety Systems

The boiler is fitted with the following devices (see **Section 2.10** for references).

1 - *Ignition Failure:*
This indicates ignition failure when a flame is not detected within 7 seconds of starting an ignition sequence. The L.E.D. **"I"** will illuminate to signal the shutdown status.
The system can be reset by pressing and releasing the button **"J"** after checking to make sure that the gas cock is open.

2 - *Insufficient System Pressure:*
In the event of insufficient water pressure in the heating system, a safety device will shutdown the boiler. Check the system pressure on the pressure gauge **"D"** and if it is less than 0.4 bar refill the system to 1.5 bar. Once the system pressure is at the correct level the boiler will reset automatically.

3 - *Overheating:*
This control shuts off the boiler in the case where the primary circuit reaches a temperature in excess of 105°C.
The red L.E.D. **"I"** will illuminate to signal this shutdown status.
The system can be reset by waiting a few minutes for the primary exchanger to cool down and then by pressing and releasing the "**J**" button.

4. *Anti-frost device:*
The boiler is fitted with a device which, in the event that the water temperature falls below 3˚C, the burner ignites at the minimum power until the boiler reaches a temperature of 33˚C.
This device only operates if the boiler is functioning perfectly and:
- the system pressure is sufficient;

- the boiler is powered electrically;
- the gas is turned on.

6 - *EXHAUST DISCHARGE ANOMALY SHUTDOWN:*

The boiler is fitted with safety devices, which in the event of defective discharge of exhaust products, automatically interrupts the gas supply, thereby shutting off the boiler.

The shutdown of the boiler is temporary and is indicated by the illumination of the yellow L.E.D. **"H"** for a period of about 15 minutes.

Once this time period has passed and the discharge state of exhaust fumes has returned to normal, the boiler automatically turns back on.

7 - *PUMP PROTECTION:*

To prevent the pump from seizing the boiler will activate the pump for 20 seconds every 21 hours after it's last operation.

3.7 DRAINING THE SYSTEM

DRAINING THE HEATING SYSTEM

The heating system must be drained as follows:

- Turn off the boiler;
- Attach a hose pipe and open the drain valve;
- Drain the system at the lowest points (where present). When the heating system is unused for an extended period of time, it is recommended that you add antifreeze with an ethylene glycol base to the water in the heating pipe work and radiators if the ambient temperature drops below 0°C during the winter.
  This makes repeated draining of the entire system unnecessary.

DRAINING THE DOMESTIC HOT WATER SYSTEM

Whenever there is the danger of the temperature dropping below the freezing point, the domestic hot water system must be drained as follows:

- Turn off the general water valve for the household plumbing system;
- Turn on all the hot and cold water taps;
- Empty the remaining water from the lowest points in the system (where present).

3.8 COMPLETION

For the Republic of Ireland it is necessary to complete a "Declaration of Conformity" to indicate compliance to I.S. 813. An example of this is given in the current edtion of I.S. 813. In addition it is necessary to complete the benchmark Log Book.

3.9 OPERATIONAL CHECKS

1. The flue system must be visibly checked for soundness.

2. On Central Heating allow the system to warm up and manipulate the Central Heating temperature control knob, check the burner modulates up and down between the high and low settings.

3. Range rate the thermal power for Central Heating, as detailed in **SECTION 4.2**

4. Run the Domestic Hot Water, manipulate the Domestic Hot Water temperature control knob to check the burner modulates up and down between the high and low settings.

5. Balance the Central Heating system until all return temperatures are correct and equal.

6. Turn ON/OFF button OFF, disconnect the pressure Gauge, retighten screw and relight boiler.

7. Re-examine Central Heating, Domestic Hot Water and Cold Water supplies for soundness.

8. Check the appearance of the gas flame to assess the adequacy of the combustion air supply.

9. If external controls have been disconnected, reconnect and test.

10. Refit boiler casing.

3.10 Instructing The End User

1. Hand over the copy of the End User Instructions supplied with the appliance, together with these instructions, and explain how to use the timeclock and room thermostat if fitted.

2. Show the End User how to switch the appliance off quickly, and indicate the position of the electric supply isolator.

3. Inform the End User of the location of all drains, isolating valves and air vents.

4. Explain how to turn the appliance off for both short and long periods and advise on the precautions necessary to prevent damage in the event that the appliance is inoperative when freezing conditions occur.

5. Finally advise the End User that, for continued safe and efficient operation, the appliance must be serviced by a competent person at least once a year.

4. GAS ADJUSTMENTS

Model	CATEGORY II2H3+		Methane Gas G20	Liquid Butane Gas G30	Liquid Propane Gas G31
23 MFFI **27 MFFI**	Lower Wobbe Index (15°C;1013mbar) Nominal Delivery Pressure Minimum Delivery Pressure	MJ/m³h mbar mbar	45.67 20 20	80.58 29 28	80.58 37 36
23 MFFI	Main Burner: n. 12 jets (ø) Consumption (15°C; 1013mbar) Consumption (15°C; 1013mbar) Gas Burner Pressure max - min	mm m³/h Kg/h mbar	1.30 2.78 ---- 11.0 - 2.0	0.77 ---- 2.02 27.7 - 6.0	0.77 ---- 2.00 35.5 - 7.3
27 MFFI	Main Burner: n. 13 jets (ø) Consumption (15°C; 1013mbar) Consumption (15°C; 1013mbar) Gas Burner Pressure max - min	mm m³/h Kg/h mbar	1.3 3.10 - 1.16 --- 12.2 - 1.7	0.77 --- 2.31 - 0.87 27.8 - 5	0.77 --- 2.27 - 0.85 35.8 - 5.3

4.1 Changing the Type of Gas

The boiler can be converted to use either methane (natural) gas (G20) or L.P.G. (G30 - G31) by an Authorised Service Centre.

The operations that must be performed are the following:

1. Replace the jets on the main burner **(see table in section 4)**;
2. Adjust the maximum and minimum thermal capacity values for the boiler **(see table in section 4 and 4.2 Adjusting the Gas Pressures)**;
3. Adjust the maximum thermal power setting;
4. Adjust the soft-light feature **(see table below for recommended pressure)**;
5. Adjust the ignition delay feature for the heating system by adjusting the potentiometer as shown in **Fig. 4.1** (can be set from 0 to 2 mins.).

CATEGORY II2H3+	Model Microcombi	Methane Gas G20	Liquid Butane Gas G30	Liquid Propane Gas G31
Recommended Soft-light Pressure (mbar)	23 MFFI	8.0	16.0	16.0
	27 MFFI	6.7	12	12

4.2 Adjusting the Gas Pressures (Sit Sigma)

Setting the minimum and the maximum power of the boiler

1. Check that the supply pressure and dynamic pressure to the gas valve is a minimum of 20 mbar for natural gas.

2. To do this, loosen the screw **"A"**.
Fit the pipe of the pressure gauge to the inlet pressure connection of the gas valve **"B"** and check for the correct standing pressure, then operate the appliance and check for the correct working pressure.
When you have completed this operation, replace the screw **"A"** securely into its housing to seal off the gas (check for tightness).

3. To check the pressure supplied by the gas valve to the burner, loosen the screw **"C"**. Fit the pipe of the pressure gauge to the pressure outlet test

4.2 Adjusting the Gas Pressures (Sit Sigma)

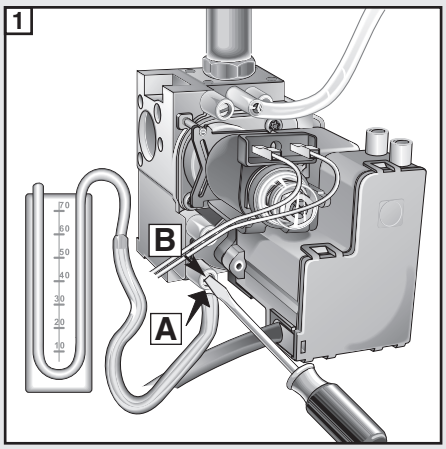

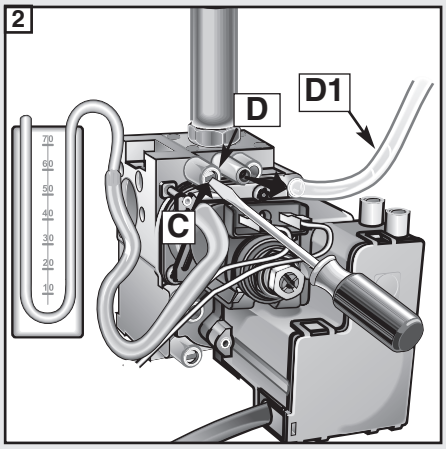

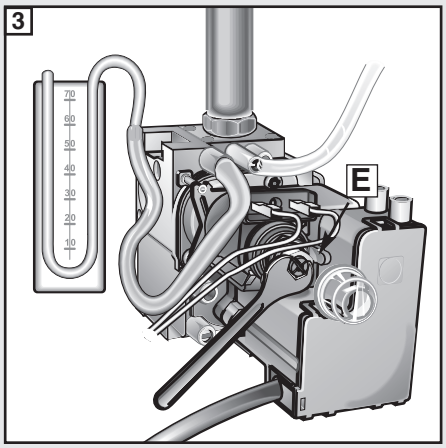

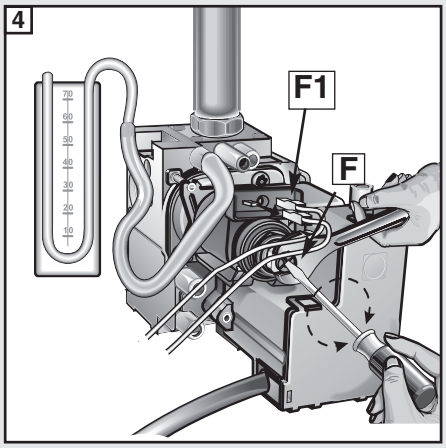

point of the gas valve **"D"**.
Disconnect the compensation pipe **"D1"** either from the gas valve or from the sealed chamber.

4. Push the On/Off button to "ON" position -*green light*- and ensure that the hot water temperature control knob is set to maximum.
   Turn on the boiler by running a hot water tap.
   Adjust the 10mm nut **"E"** on the modureg to set the maximum gas pressure, turn the nut clockwise to increase and anti clockwise to decrease the pressure until the required pressure is achieved (see **Table A** page 30).
5. To set the minimum power, disconnect a supply terminal **"F1"** from the modureg and adjust screw **"F"** (ensure that the 10mm nut is held in position). Turn the screw clockwise to increase the pressure and anti-clockwise to decrease the pressure (displayed on the pressure gauge) corresponding to the minimum power (see **Table A** page 30).
6. When you have completed the above operations, turn off the hot water tap, reconnect the supply terminal to the modureg on the gas valve, reconnect the compensation pipe and replace the cap on the screw of the modureg.

Setting the maximum heating circuit power

7. To set the maximum heating circuit power, push the On/Off button to the "ON" position -*green light*- and push the Heating button and set the time clock and any external controls to the "ON" position -*green light*. Turn the knob of the heating thermostat clockwise to maximum.
8. Remove the inspection panel of the P.C.B. and fit a small cross-head screwdriver in to the right hand potentiometer (see below). Turn clockwise to increase the pressure or counter-clockwise to reduce the pressure. Adjust the setting to the required heating pressure value (displayed on the pressure gauge), as indicated in the charts shown on pages 30 and 31.
9. Turn off the boiler by placing the main switch to the "OFF" position.

Setting the pressure for soft-light ignition.

Disconnect the detection electrode connection close to the P.C.B. (Fig. 2.13).
Start the boiler and during the ignition sequence adjust the left hand potentiometer until the gas pressure reads the required gas pressure **(see the table on page 29)**.
Once the gas pressure is set turn off the boiler and re-connect the detection electrode to the P.C.B.
NB.: It may be necessary to reset the flame failure reset a number of times during this operation.

10. Remove the pipe from the test point and tighten the screw "**C**" to the pressure test point in order to seal off the gas.
11. Carefully check the pressure test points for gas leaks (valve inlet and outlet).

IMPORTANT!
Whenever you disassemble and reassemble the gas connections, always check for leaks using a leak detection fluid.

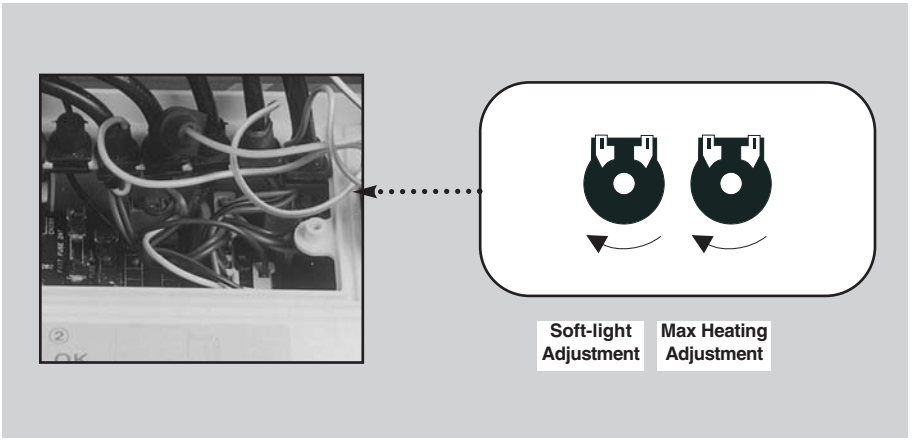

4.2 Adjusting the Gas Valve (Honeywell)

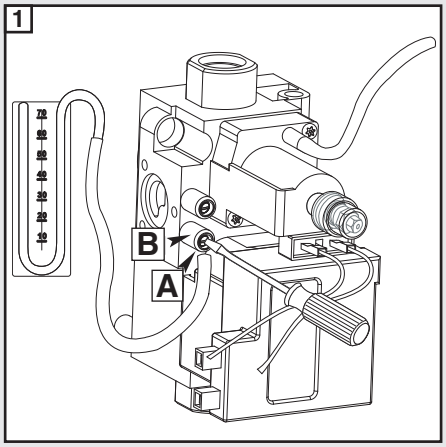

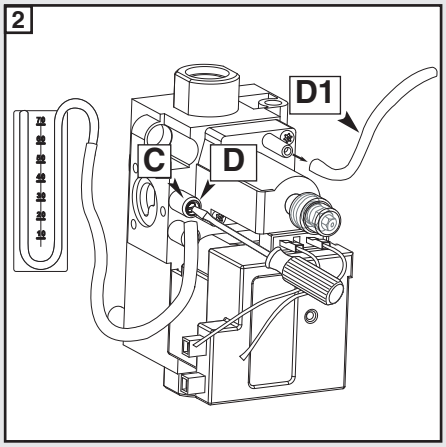

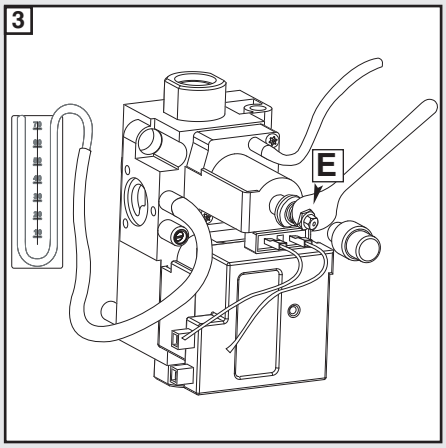

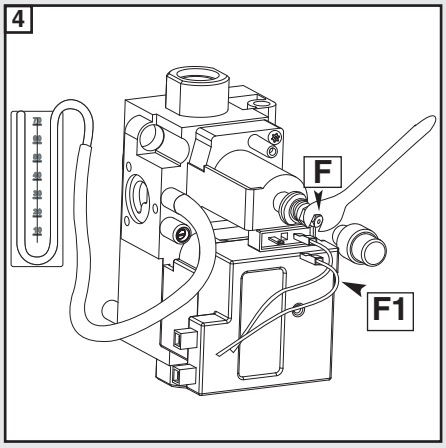

Setting the minimum and the maximum power of the boiler

1. Check that the supply pressure and dynamic pressure to the gas valve is a minimum of 20 mbar for natural gas.
2. To do this, loosen the screw **"A"**.
   Fit the pipe of the pressure gauge to the inlet pressure connection of the gas valve **"B"** check for the correct standing pressure, then operate the appliance and check for the correct working pressure.
   When you have completed this operation, replace the screw **"A"** securely into its housing to seal off the gas (check for tightness).
3. To check the pressure supplied by the gas valve to the burner, loosen the screw **"C"**. Fit the pipe of the pressure gauge to the pressure outlet test point of the gas valve **"D"**.
   Disconnect the compensation pipe **"D1"** either from the gas valve or from the sealed chamber.
4. Push the On/Off button to "ON" position -*green light*- and ensure that the hot water temperature control knob is set to maximum.
   Turn on the boiler by running a hot water tap.
   Adjust the 10mm nut **"E"** on the modureg to set the maximum gas pressure, turn the nut clockwise to increase and anti clockwise to decrease the pressure until the required pressure is achieved (see **Table A** page 30)
5. To set the minimum power, disconnect a supply terminal **"F1"** from the modureg and adjust screw **"F"** (ensure the 10mm nut is held in position). Turn the screw clockwise to increase the gas pressure and counter-clockwise to decrease the gas pressure (displayed on the pressure gauge) corresponding to the minimum power (see **Table A** page 30).
6. When you have completed the above operations, turn off the hot water tap, re-connect the supply terminal to the modureg on the gas valve and replace the cap on the screw of the modureg.

Setting the maximum heating circuit power

7. To set the maximum heating circuit power, push the On/Off button to the "ON" position -*green light*- and push the Heating button and set the time clock and any external controls to the "ON" position -*green light*. Turn the knob of the heating thermostat clockwise to maximum.
8. Remove the inspection panel of the P.C.B. and fit a small cross-head screwdriver in to the right hand potentiometer (see page 28). Turn clockwise to increase the pressure or counter-clockwise to reduce the pressure. Adjust the setting to the required heating pressure value (displayed on the pressure gauge), as indicated in the charts shown on pages 30 amd 31.
9. Turn off the boiler by placing the main switch to the "OFF" position.

Setting pressure for soft ignition.

Disconnect the detection electrode connection close to the P.C.B. **(Fig. 11.14).**
Start the boiler and during the ignition sequence adjust the left hand potentiometer until the gas pressure reads the required gas pressure as per the table below.
Once the gas pressure is set turn off the boiler and re-connect the connection to the P.C.B.
NB.: It may be necessary to reset the flame failure reset a number of times during this operation.

10. Remove the pipe from the test point and tighten the screw "**C**" to the pressure test point in order to seal off the gas.
11. Carefully check the pressure test points for gas leaks (valve inlet and outlet).

IMPORTANT!

Whenever you disassemble and reassemble the gas connections, always check for leaks using a leak detection fluid.

Note: always check the gas rates following adjustment.

Recommended pressure for soft-light ignition	NATURAL GAS (G20)	BUTANE GAS (G30)	PROPANE GAS (G31)
23 Kw	8 mbar	16 mbar	16 mbar
27 Kw	6.7 mbar	12 mbar	12 mbar

TABLE A

mi-Combi 23 MFFI	GAS REQUIREMENTS	NATURAL GAS (G20)	BUTANE GAS (G30)	PROPANE GAS (G31)
	Gas rate max	2.78 m³/h	2.02 Kg/h	2.00 Kg/h
	Gas rate min	1.16 m³/h	0.87 Kg/h	0.85 Kg/h
	Inlet pressure	20 mbar	28 mbar	37 mbar
	Burner pressure max	11.0 mbar	27.5 mbar	35.5 mbar
	Burner pressure min	2.0 mbar	6.2 mbar	7.3 mbar
	Burner jets	12 x 1.30	12 x 0.77	12 x 0.77

mi-Combi 27 MFFI	GAS REQUIREMENTS	NATURAL GAS (G20)	BUTANE GAS (G30)	PROPANE GAS (G31)
	Gas rate max	3.10 m³/h	2.31 Kg/h	2.27 Kg/h
	Gas rate min	1.16 m³/h	0.87 Kg/h	0.85 Kg/h
	Inlet pressure	20 mbar	28 mbar	37 mbar
	Burner pressure max	12.2 mbar	27.8 mbar	35.8 mbar
	Burner pressure min	1.7 mbar	5 mbar	5.3 mbar
	Burner jets	13 x 1.30	13 x 0.77	13 x 0.77

Regulating the heating power for natural gas (G20)

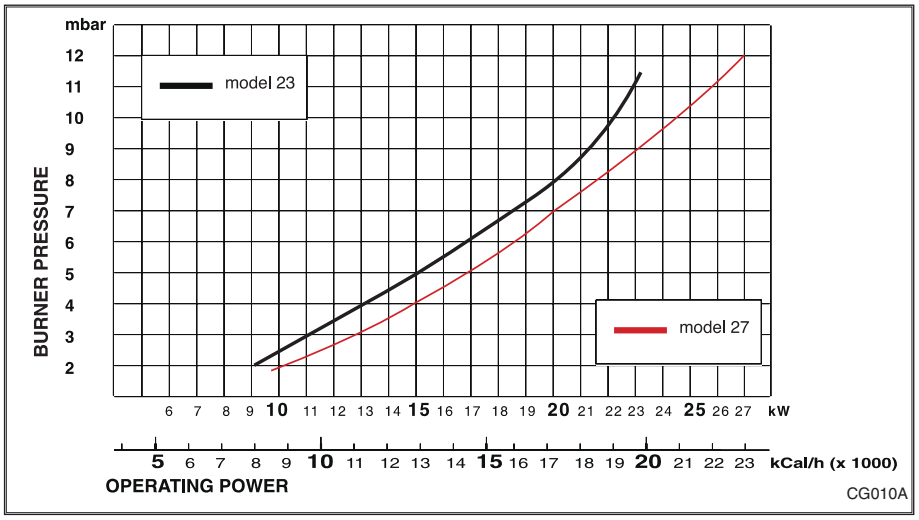

Regulating the heating power for butane gas (G30)

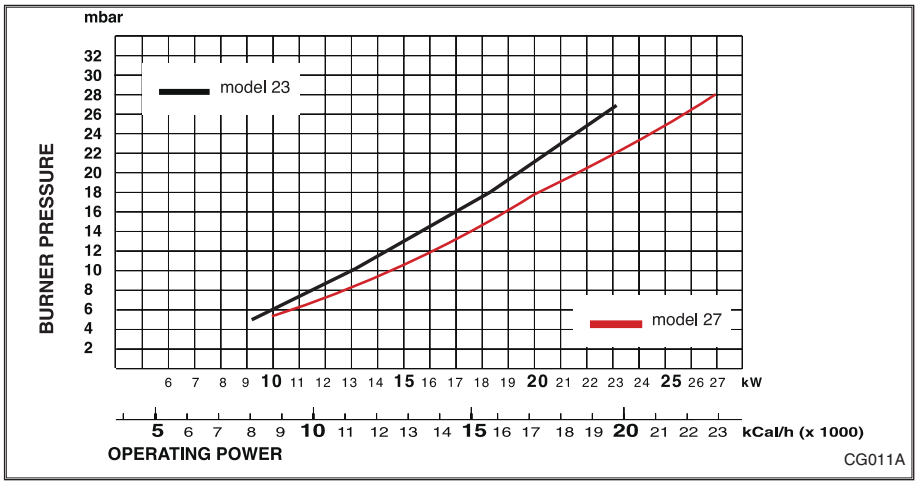

Regulating the heating power for propane gas (G31)

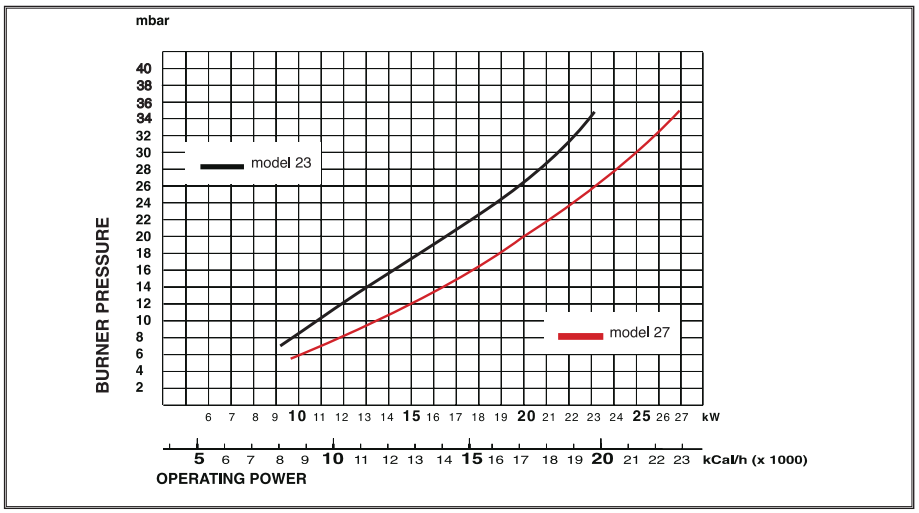

5. MAINTENANCE

It is recommended that the following inspections be carried out on the boiler at least once a year:

1 - Check the seals for the water connections; replace any faulty seals.
2 - Check the gas seals; replace any faulty gas seals.
3 - Visual check of the entire unit.
4 - Visual check of the combustion process or analysis of combustion by-products (see **SECTION 3.4**) and cleaning of the burner if needed.
5 - If necessary, dismantling and cleaning of the combustion chamber.
6 - If necessary, dismantling and cleaning of the burner jets.
7 - Visual check of the primary heat exchanger:
  - check for overheating in the blade assembly;
  - clean the exhaust fan if needed.
8 - Adjustment of the gas pressure, gas rate and soft-light, partial load and full load.
9 - Check of the heating safety systems:
  - safety device for maximum temperature (overheat thermostat);
  - safety device for maximum pressure (safety valve).
10- Check of the gas safety systems:
  - safety device for lack of gas or flame ionisation (detection electrode).
11- Check of the electrical connection (ensure it complies with the instructions in the manual).
12- Check of Domestic Hot Water production efficiency (flow rate and temperature)
13- General check of the combustion by-products of the discharge/ventilation system.
14- Check of the general performance of the unit.

6. SERVICING INSTRUCTIONS

To ensure efficient safe operation, it is recommended that the boiler is serviced annually by a competent person.

Before starting any servicing work, ensure both the gas and electrical supplies to the boiler are isolated and the boiler is cool.
Before and after servicing, a combustion analysis should be made via the flue sampling point (please refer to **SECTION 3.4** for further details).

After servicing, preliminary electrical system checks must be carried out to ensure electrical safety (i.e. polarity, earth continuity, resistance to earth and short circuit).

6.1 REPLACEMENT OF PARTS

The life of individual components vary and they will need servicing or replacing as and when faults develop.
The fault finding sequence chart in **SECTION 7** will help to locate which component is the cause of any malfunction, and instructions for removal, inspection and replacement of the individual parts are given in the following pages.

6.2 TO GAIN GENERAL ACCESS

All testing and maintenance operations on the boiler require the control panel to be lowered. This will also require the removal of the casing.

6.2.1 Removing the front panel

1. Loosen the fastening screws “A” of the control panel located on the lower part of the panel itself. (FIG. 6.1);

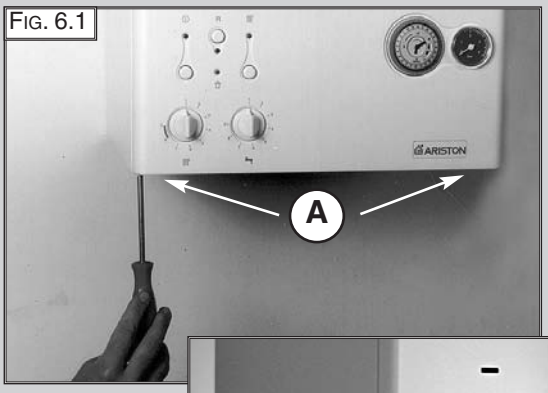

FIG. 6.1

FIG. 6.2

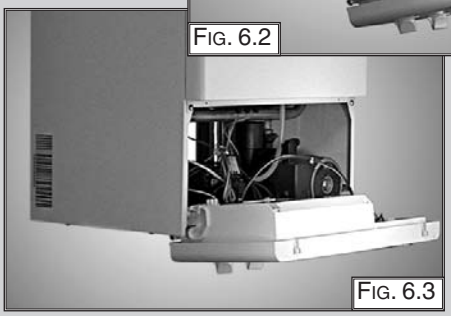
FIG. 6.3

2. The control panel moves downward and when pulled forward, rotates on two lateral hinges; the panel stays in a semi-horizontal position, which allows access to the inner parts of the boiler (FIG. 6.2);
3. In order to increase the manoeuvring space, it is possible to raise the control panel and rotate it to a fully horizontal position (FIG. 6.3);
4. Remove the screws “B” from the front panel bottom lip (FIG. 6.4);
5. Lift the front panel up and forward from the raised screws at the the top of the casing (FIG. 6.5).

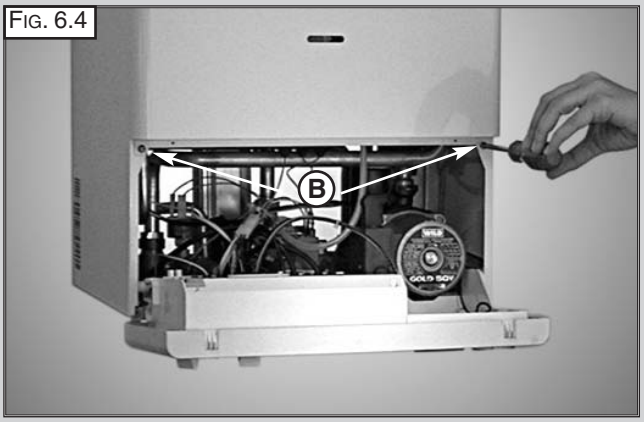

FIG. 6.4

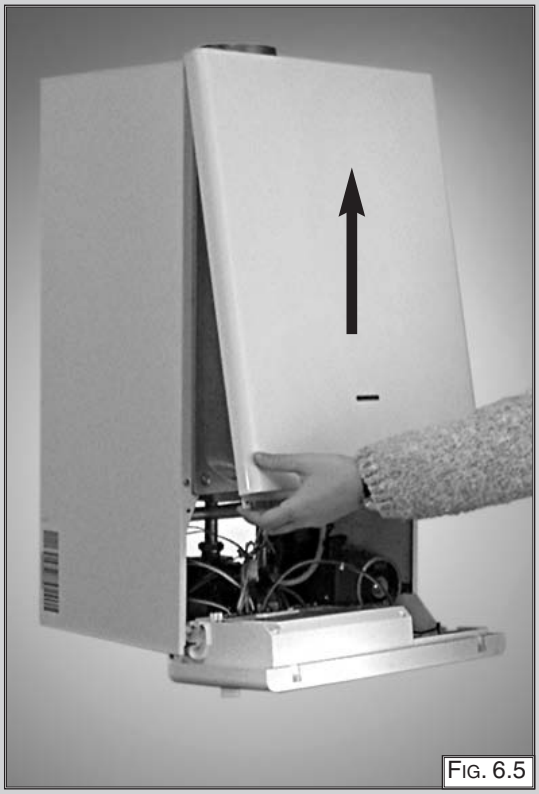
FIG. 6.5

6.2.2 Removing the sealed chamber front cover

1. Remove the screws “C” (FIG. 6.6);
2. Lift the sealed chamber front cover from the locating pins (FIG. 6.7).

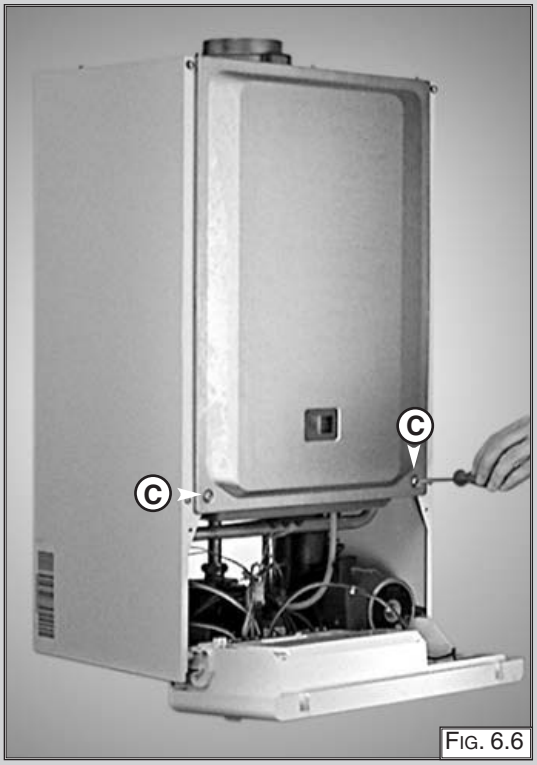

FIG. 6.6

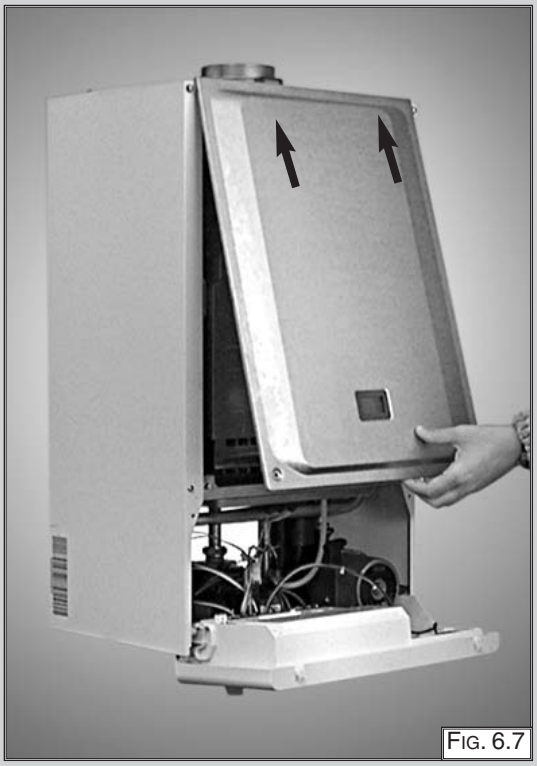
FIG. 6.7

6.2.3 Removing the side panels

1. Remove the four screws “D” for each side panel (FIG.6.8);
2. Pull the panel away from the boiler at the base, then lift the panel up and remove from the boiler (FIG.6.9).

FIG. 6.8

FIG. 6.9
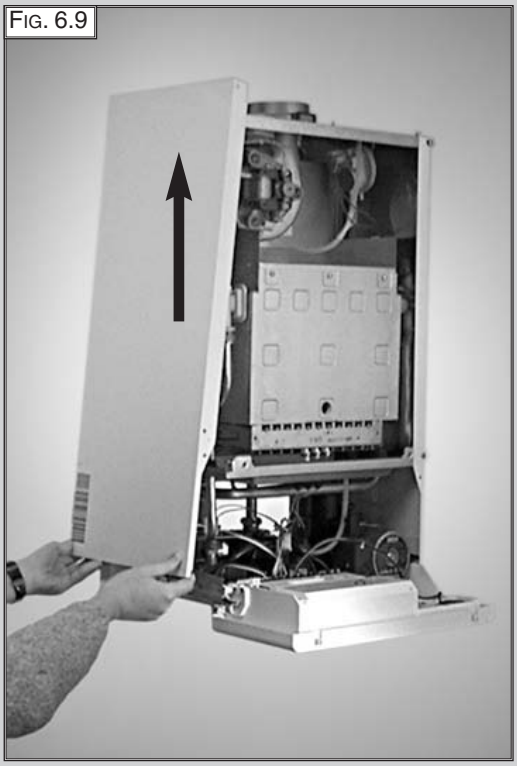

6.3 Access to the Combustion Chamber

6.3.1 Removing the combustion cover

1. Remove the screws “E” (Fig. 6.10);
2. Lift off the combustion cover.

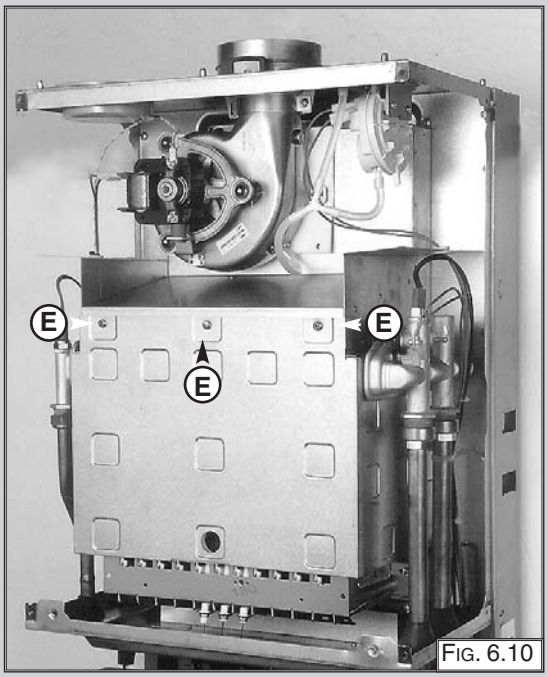

Fig. 6.10

6.3.2 Removing the burner and jets

1. Remove the screws “F” from the burner (Fig. 6.11);
2. Remove the burner (Fig. 6.12);
3. Disconnect the electrodes (*see* **section 6.3.3**);
4. Remove the jets using a No. 7 socket spanner;
5. Replace in reverse order.

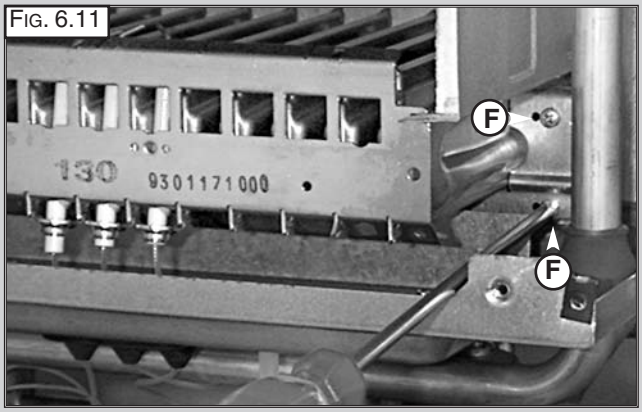

Fig. 6.11

Fig. 6.12

6.3.3 Removing the electrodes

Before carrying out this procedure, unscrew and slide the burner forward (see previous section).
1. Remove rubber gasket “G” (Fig. 6.13);
2. To remove the detection electrode disconnect the cable at its connection point close to the P.C.B. (Fig. 6.14);
3. Remove screw “H” (Fig. 6.15);
4. Gently slide the electrode downward (Fig. 6.16).

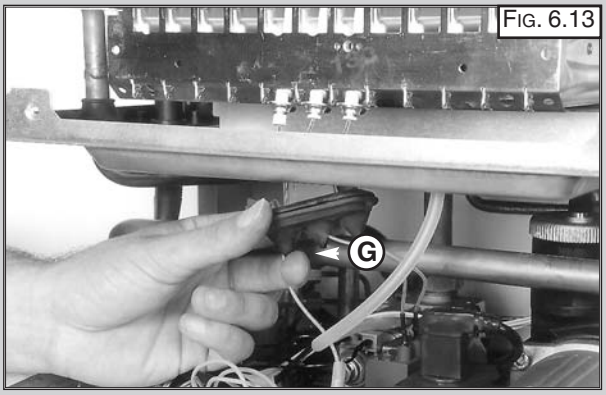

Fig. 6.13

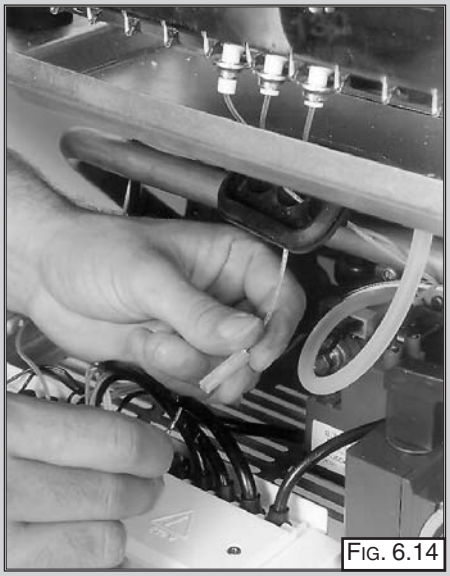
Fig. 6.14

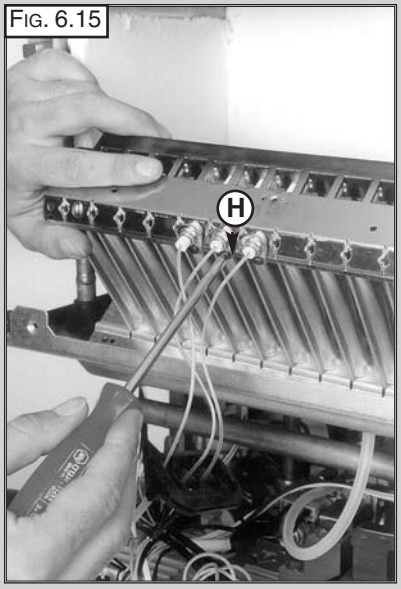

FIG. 6.15

FIG. 6.16

To replace, repeat the steps in reverse order, paying particular attention to the following:

a - Centre the electrode in the positioning hole carefully, otherwise the electrode may break;

b - Ensure that the left hand and right hand electrodes are located the correct way round (facing each other), to give the correct spark gap;

c - Check that the cables have been connected correctly;

d - Check that the rubber gasket seals the cable/ electrode connection point completely.

6.3.4 Removing the main heat exchanger

1. Drain the boiler of water;

2. Remove the overheat thermostat sensor, D.H.W. sensor and heating sensor "I" (FIG. 6.17);

3. Release the four connection nuts "J" connecting the exchanger to the flow and return pipes (FIG. 6.18);

4. Pull it straight out (FIG. 6.19).

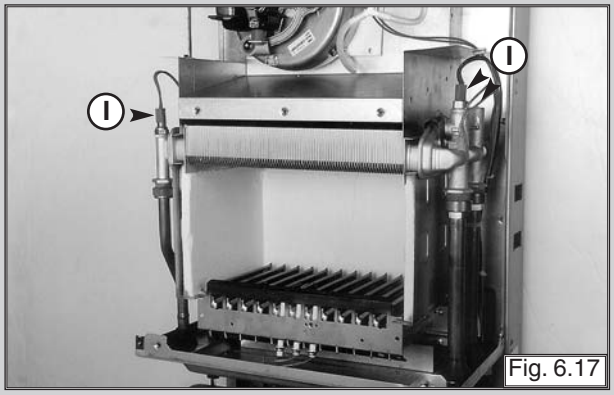

Fig. 6.17

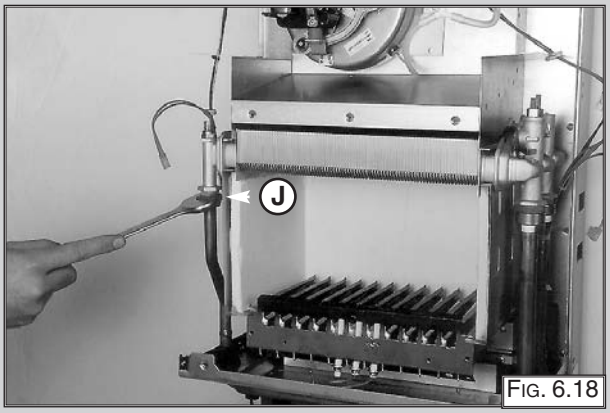

FIG. 6.18

FIG. 6.19

6.3.5 Removing the air pressure switch

1. Disconnect the electrical connections “K” and silicone pipes “L” from their connection points (FIG. 6.20);
2. Remove screws “M” on the top of the sealed chamber (FIG. 6.21);
3. Lift out the air pressure switch (FIG. 6.22);
4. Unscrew to remove the switch from the plate.

FIG. 6.20

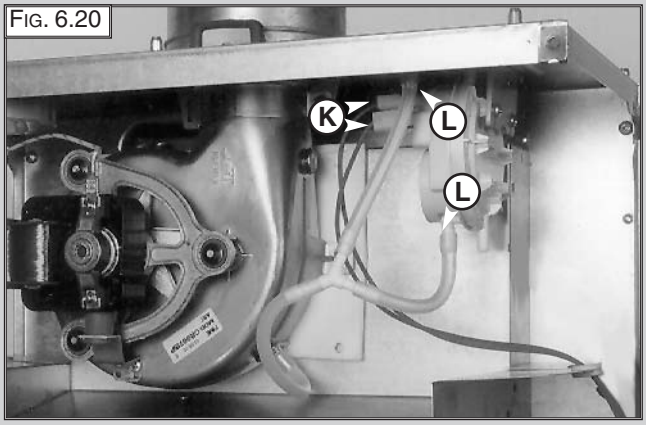

FIG. 6.21

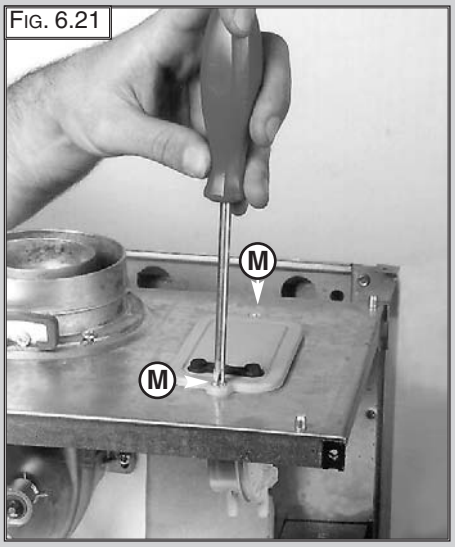

FIG. 6.22

6.3.6 Removing the fan

1. Disconnect electrical connections “N” and silicone pipe “O” (FIG.6.23);
2. Remove screw “P” and remove the fan collar clamp “Q” (FIG.6.24);
3. Remove screws “R” (FIG.6.25);
4. Remove fan and mounting plate (FIG.6.26).

FIG. 6.23

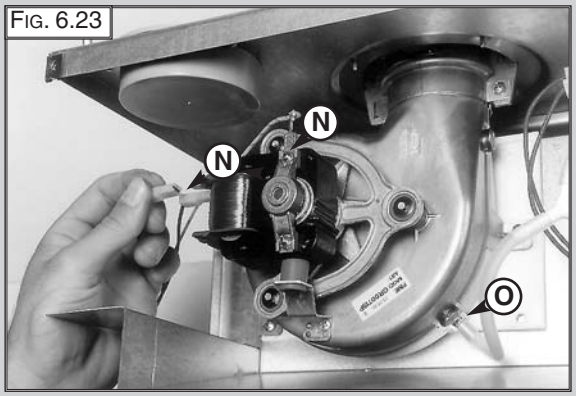

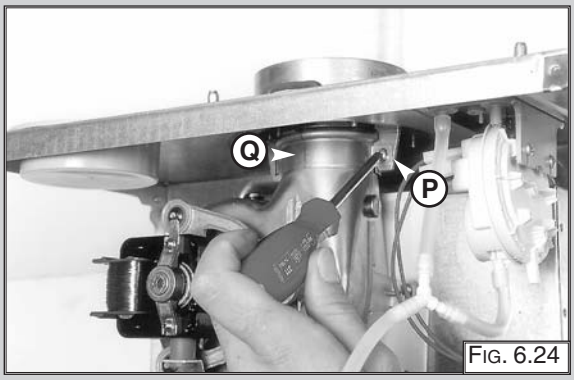

FIG. 6.24

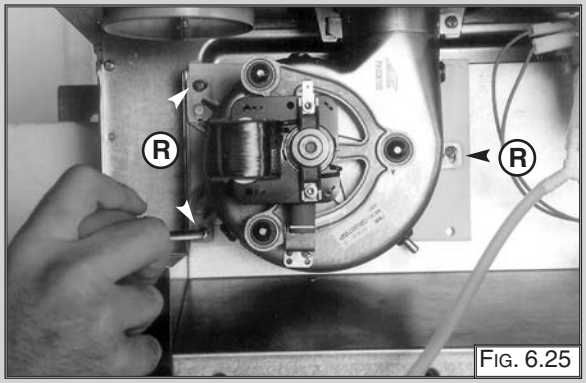

FIG. 6.25

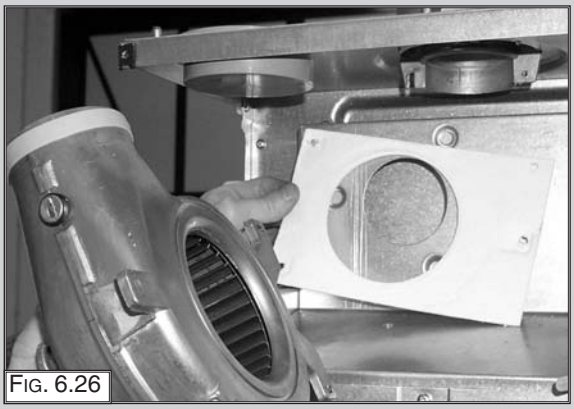

FIG. 6.26

6.4 Access to the Gas Valve

6.4.1. Removing the spark generator (SIT SIGMA Gas Valve)

1. Disconnect ignition leads “S” by pulling upward (Fig. 6.27A);
2. Remove the screw “T” (Fig. 6.28A);
3. Remove the spark generator by pulling forward from the gas valve (Fig. 6.29A).

Fig. 6.27A

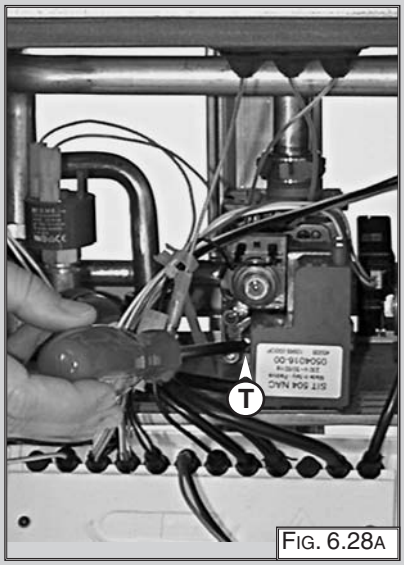

Fig. 6.28A

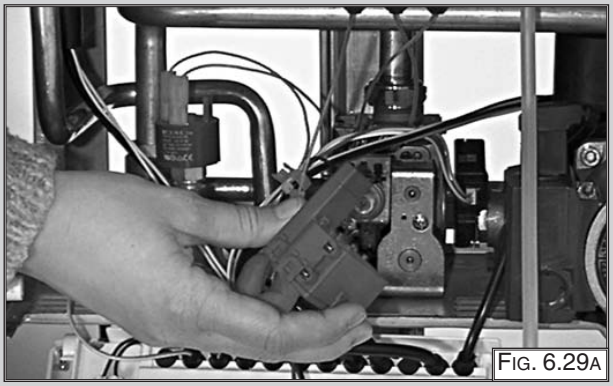
Fig. 6.29A

6.4.2. Removing the spark generator (HONEYWELL Gas Valve)

1. Disconnect ignition leads “S” by pulling upward (Fig. 6.27B);
2. Remove the screw “T” (Fig. 6.28B);
3. Remove the spark generator by pulling forward from the gas valve (Fig. 6.29B).

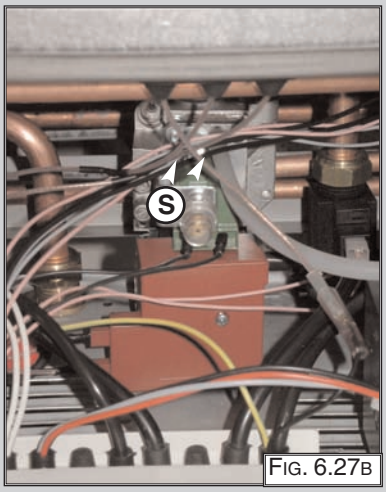

Fig. 6.27B

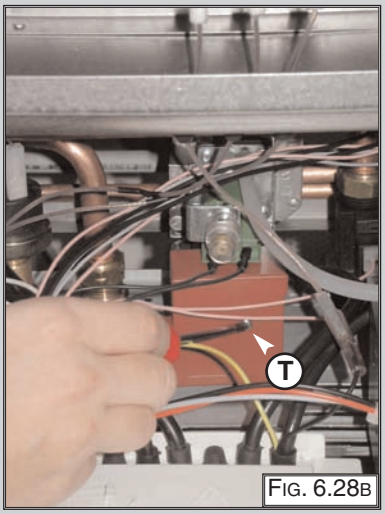

Fig. 6.28B

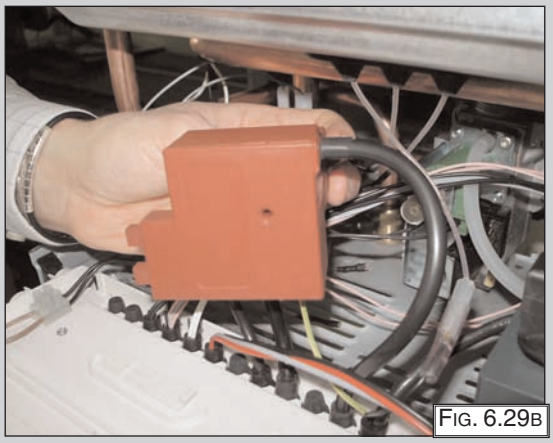
Fig. 6.29B

6.4.3 Removing the gas valve (SIT SIGMA)

Important! Before removing the gas valve, ensure the gas supply is turned off.

1. Disconnect all the cables from the solenoid and modureg;
2. Remove the spark generator (see previous section);
3. Release the nuts “U” (Fig. 6.30A);
4. Remove the screws “V” from the bottom of the gas valve (Fig. 6.31A);
5. Remove the gas valve (Fig. 6.32A).

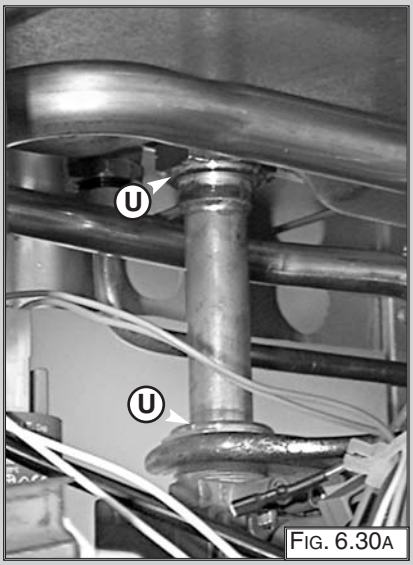

Fig. 6.30A

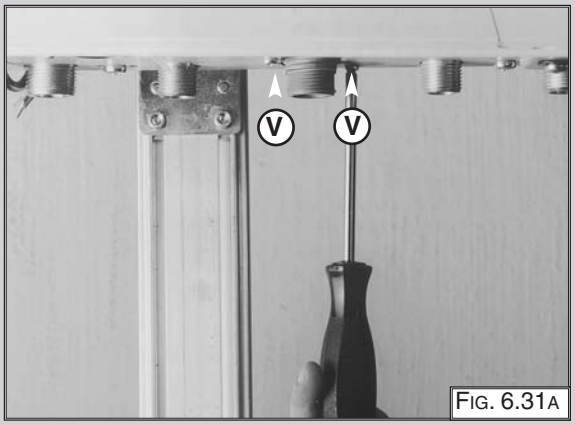

Fig. 6.31A

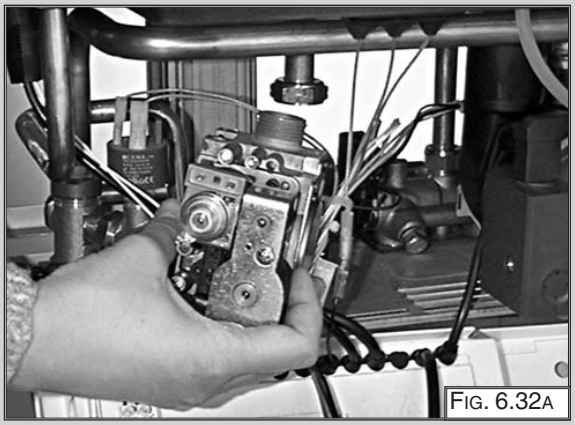
Fig. 6.32A

6.4.4 Removing the gas valve (HONEYWELL)

Important! Before removing the gas valve, ensure the gas supply is turned off.

1. Disconnect all the cables from the solenoid and modureg;
2. Remove the spark generator (see previous section);
3. Release the nuts “U” (Fig. 6.30B);
4. Remove the screws “V” from the bottom of the gas valve (Fig. 6.31B);
5. Remove the gas valve (Fig. 6.32B).

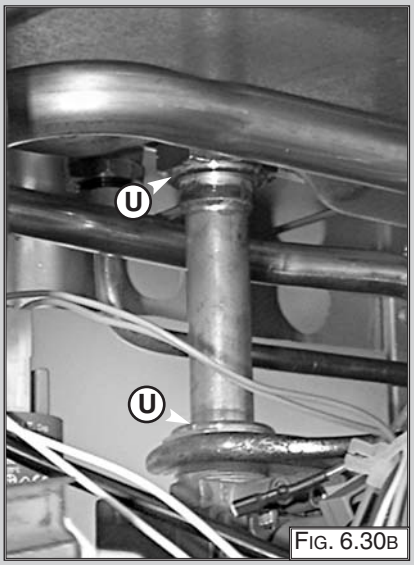

Fig. 6.30B

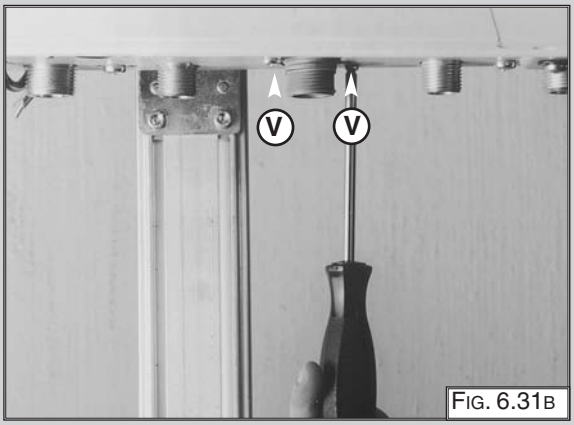

Fig. 6.31B

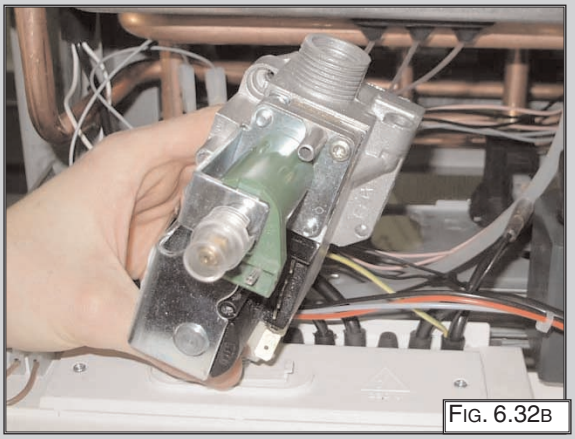
Fig. 6.32B

6.5 Access to the Water Circuit

Important! Before any component is removed, the boiler must be drained of all water.

6.5.1 Removing the pump pressure switch

1. Remove the pump pressure switch electrical connections "W" (Fig 6.33);
2. Unscrew the pump pressure switch by using a spanner on the nut;
3. Remove the pump pressure switch.

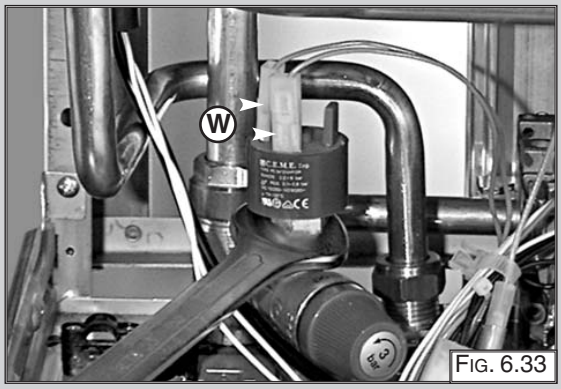

Fig. 6.33

6.5.2 Removing the safety valve

1. Disconnect the discharge pipe work from below the boiler;
2. Unscrew and remove the valve "X" (Fig. 6.34).

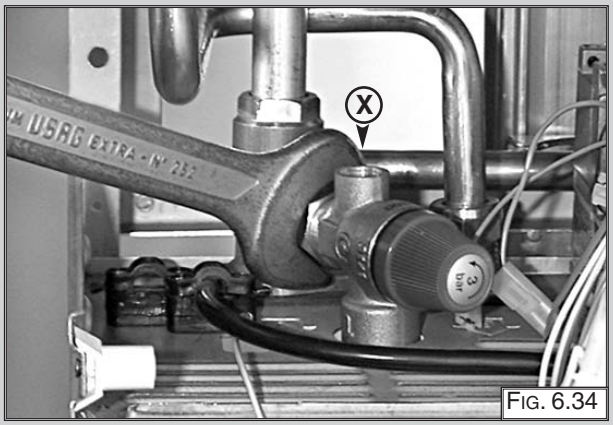

Fig. 6.34

6.5.3 Removing the automatic air vent

1. Unscrew valve top "Y" (Fig. 6.35);
2. Remove valve complete with float (Fig 6.36).

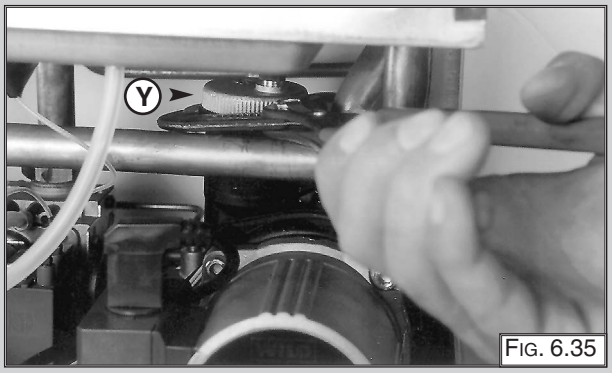

Fig. 6.35

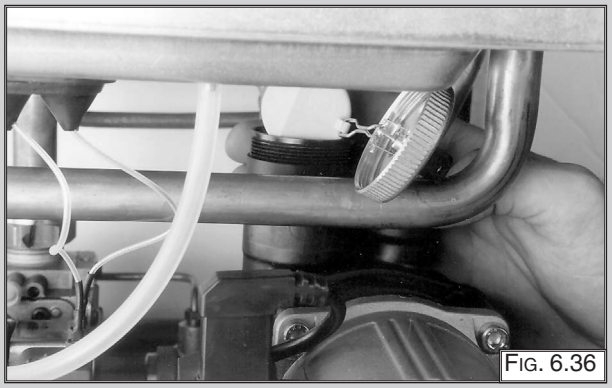
Fig. 6.36

6.5.4 Removing the pump

1. Remove the U-clip “ Z” (FIG. 6.37);
2. Remove the retaining clip “A1” (FIG. 6.38);
3. Release the nut “C1” (FIG. 6.39);
4. Remove the pipe “D1” (FIG. 6.40);
5. Remove the screws “E1” (FIG. 6.41);
6. Remove the pump.

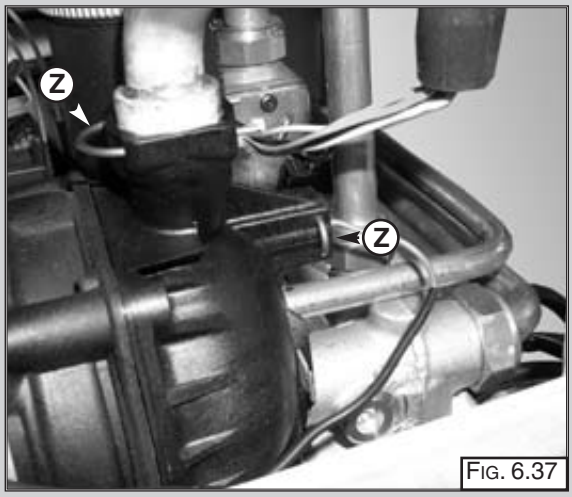

FIG. 6.37

FIG. 6.38

FIG. 6.39

FIG. 6.40

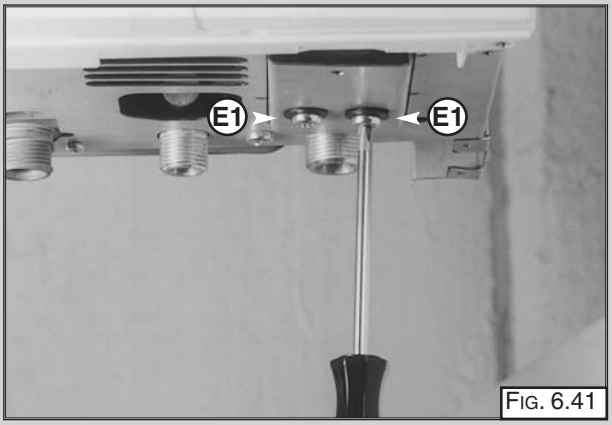

FIG. 6.41

6.5.5 Removing the pressure gauge

1. Remove the U-clip “F1” (Fig. 6.42)
2. Remove the pressure gauge coupling (Fig. 6.42);
3. Push the pressure gauge through the control panel from the rear (Fig. 6.43).

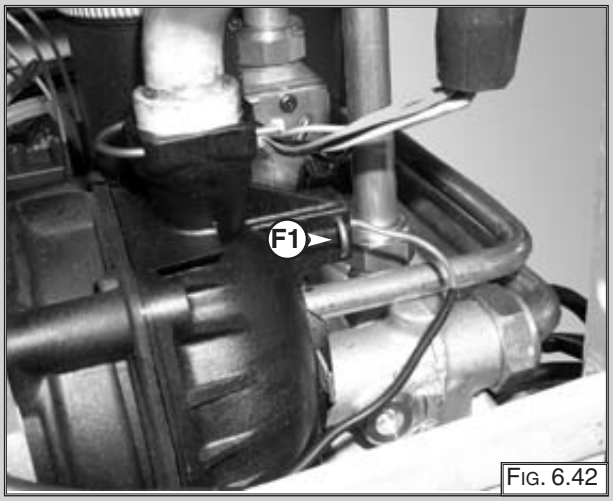

Fig. 6.42

Fig. 6.43

6.5.6 Removing the expansion vessel

1. Release nuts “G1” and remove the gas pipe (Fig. 6.44);
2. Release nut “H1” (Fig. 6.45);
3. Remove back-nut “I1” (Fig. 6.46);
4. Remove the expansion vessel (Fig. 6.47).

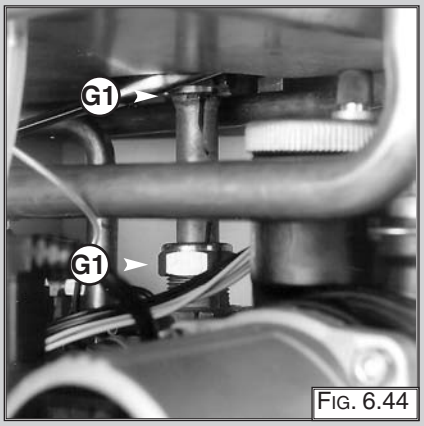

Fig. 6.44

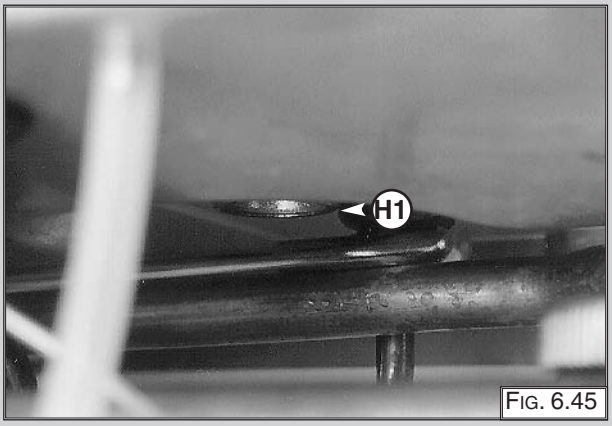

Fig. 6.45

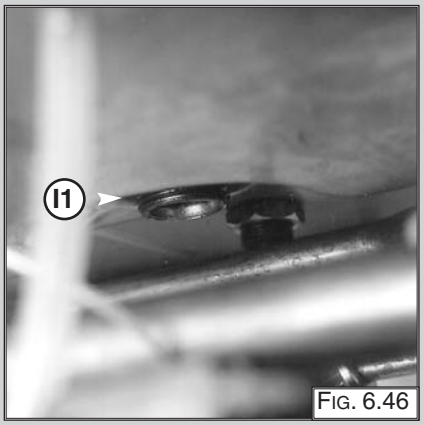

Fig. 6.46

Fig. 6.47

6.5.7 Removing the overheat thermostat

1. Disconnect the overheat thermostat electrical connections “J1” (FIG. 6.48);
2. Then remove the thermostat from its mounting by releasing the securing clip (FIG. 6.49 /6.50).

FIG. 6.48

FIG. 6.49

FIG. 6.50

6.5.8 Removing the heating temperature sensor (N.T.C.)

1. Pull off the electrical connector and unscrew the sensor probe using a suitable spanner (FIG. 6.51).

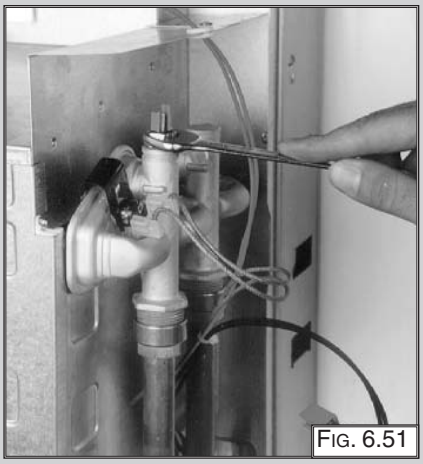
FIG. 6.51

6.5.9 Removing the D.H.W. temperature sensor (N.T.C.)

1. Pull off the electrical connector and unscrew the sensor probe using a suitable spanner (FIG. 6.52).

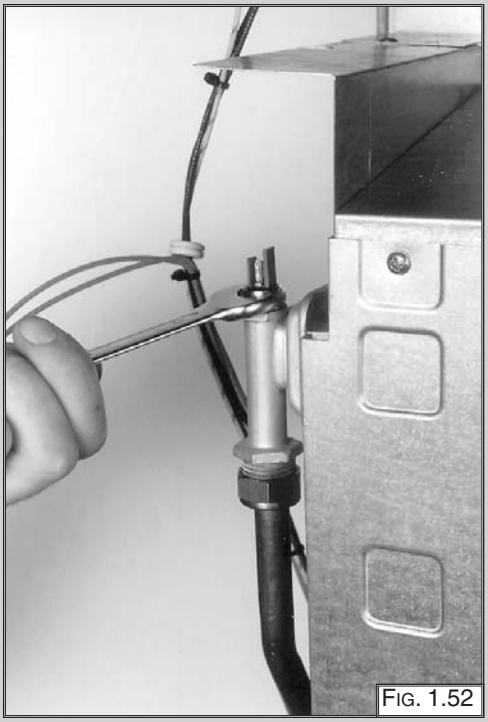
FIG. 1.52

6.5.10 Removing the D.H.W. flow switch

1. Unplug the electrical connector “M1” (FIG. 6.53);
2. Release nut “N1” (FIG. 6.53a);
3. Release the nut “O1” (FIG. 6.53b) and remove the D.H.W. flow switch.

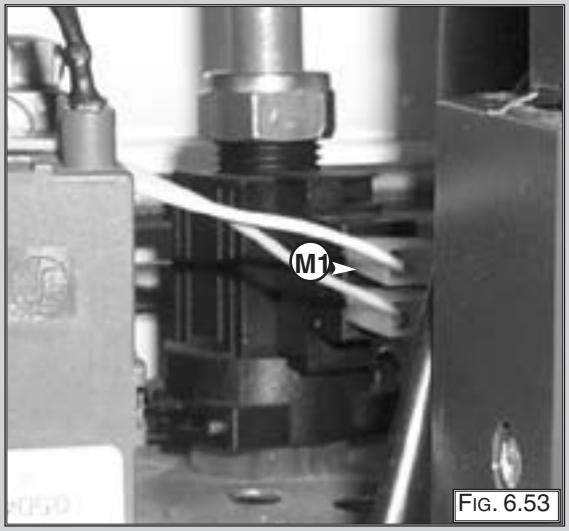

FIG. 6.53

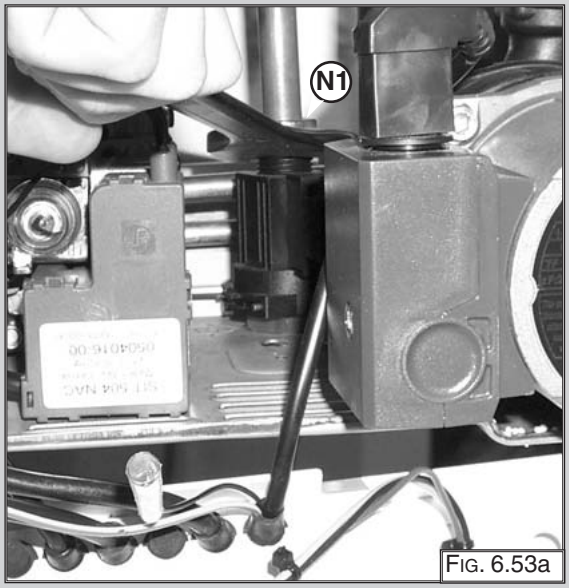

FIG. 6.53a

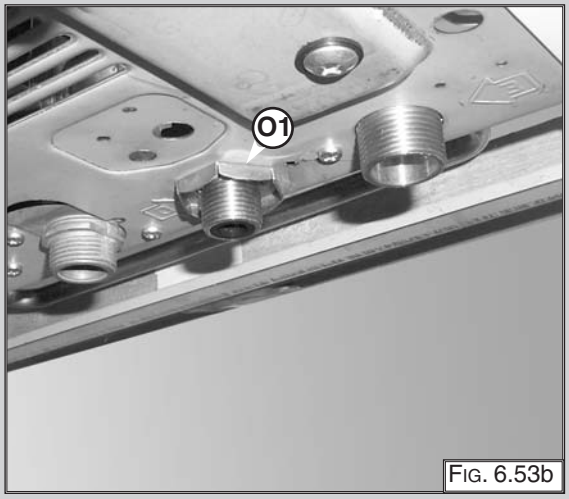

FIG. 6.53b

6.6 ACCESS TO THE CONTROL SYSTEM

Important! Isolate the electrical supply to the boiler before accessing the control panel.

6.6.1 Checking the fuses

1. Remove the inspection cover on the reverse of the control panel (FIG. 6.54);
2. Remove the fuses (FIG. 6.55).

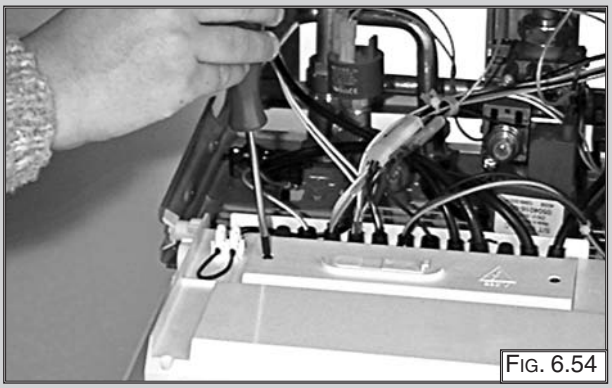
FIG. 6.54

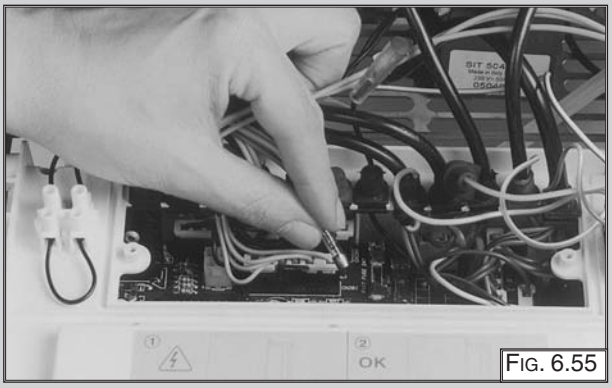

FIG. 6.55

6.6.2 Removing the time clock

1. Disconnect the electrical connections “P1” from the clock (FIG. 6.56);
2. Remove screws “Q1” (FIG. 6.57);
3. Lift out the time clock from the control panel (FIG. 6.58).

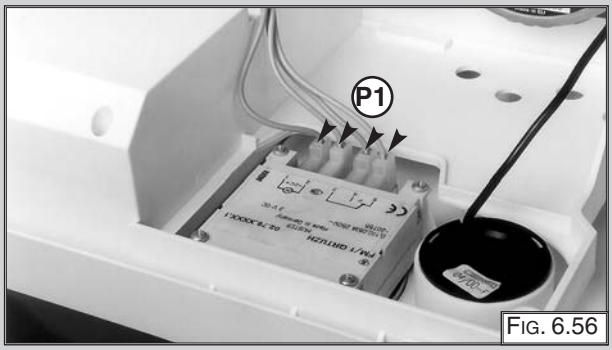

FIG. 6.56

FIG. 6.57

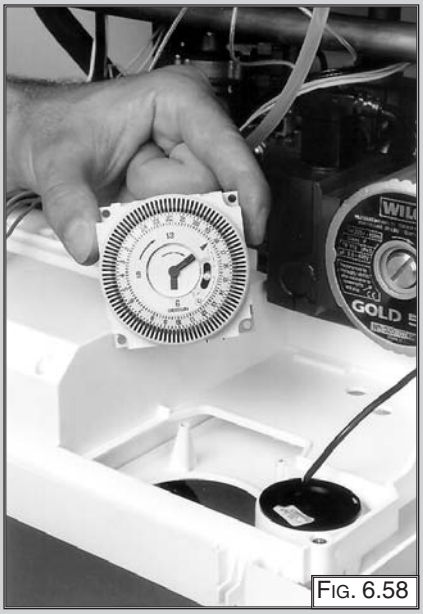
FIG. 6.58

6.6.3 Removing the P.C.B.

1. Isolate electricity;
2. Remove the inspection cover from the reverse of the control panel;
3. Unplug all electrical connections from the P.C.B.
4. Remove the screws “R1” (FIG. 6.59);
5. Separate the facia panel from the rear of the control panel ;
7. Remove the screws “S1” and remove the P.C.B. (FIG. 6.60).

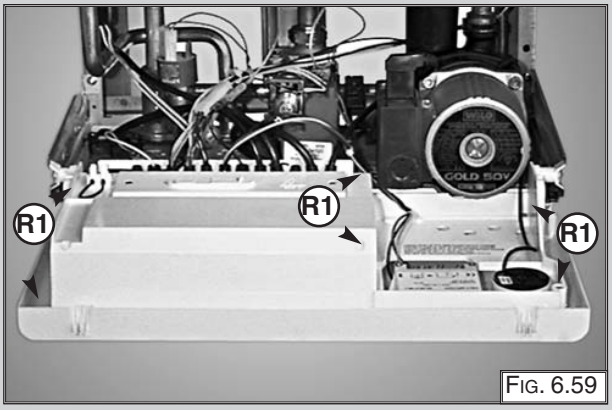

FIG. 6.59

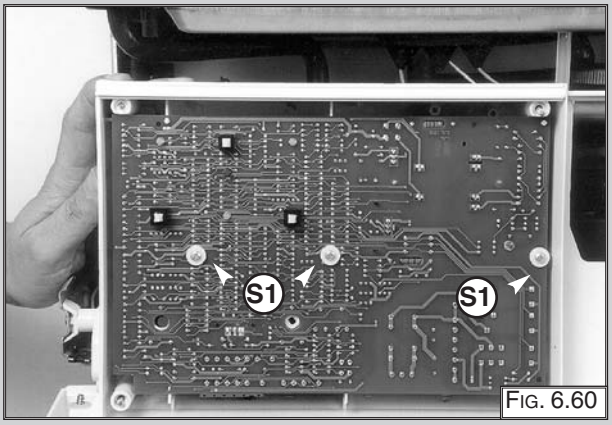

FIG. 6.60

7. FAULT FINDING

7.1 FAULT FINDING GUIDE (FLOW-CHARTS)

These fault finding guides are not exhaustive. However, it is possible to detect and correct many defects by using the standard fault finding diagrams described in this chapter, ensure these guides are carried out in the set order.

To ensure that the external controls do not interfere with the fault finding, disconnect the wires from the terminal block on the rear of the control panel and provide a solid link between the terminals.

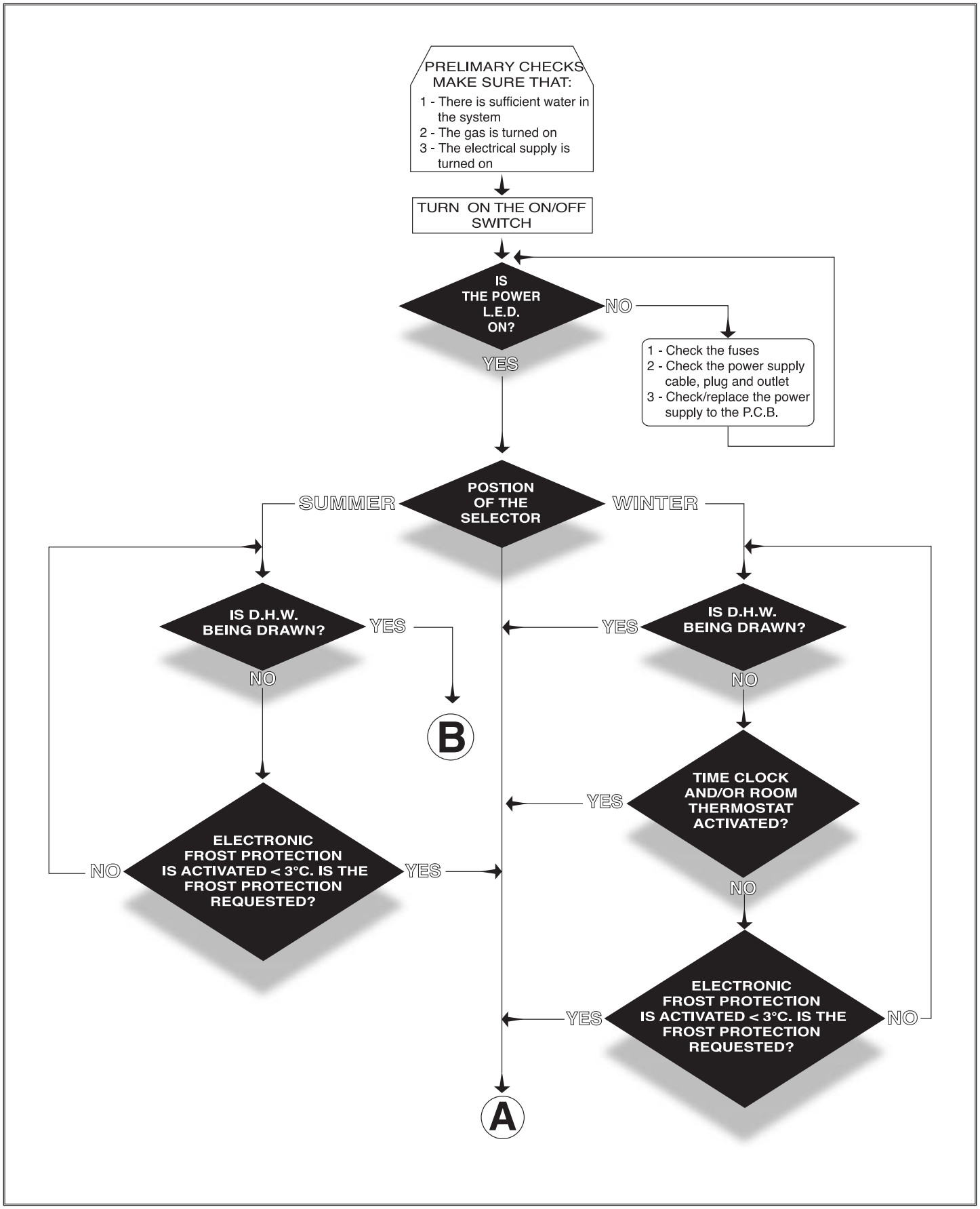

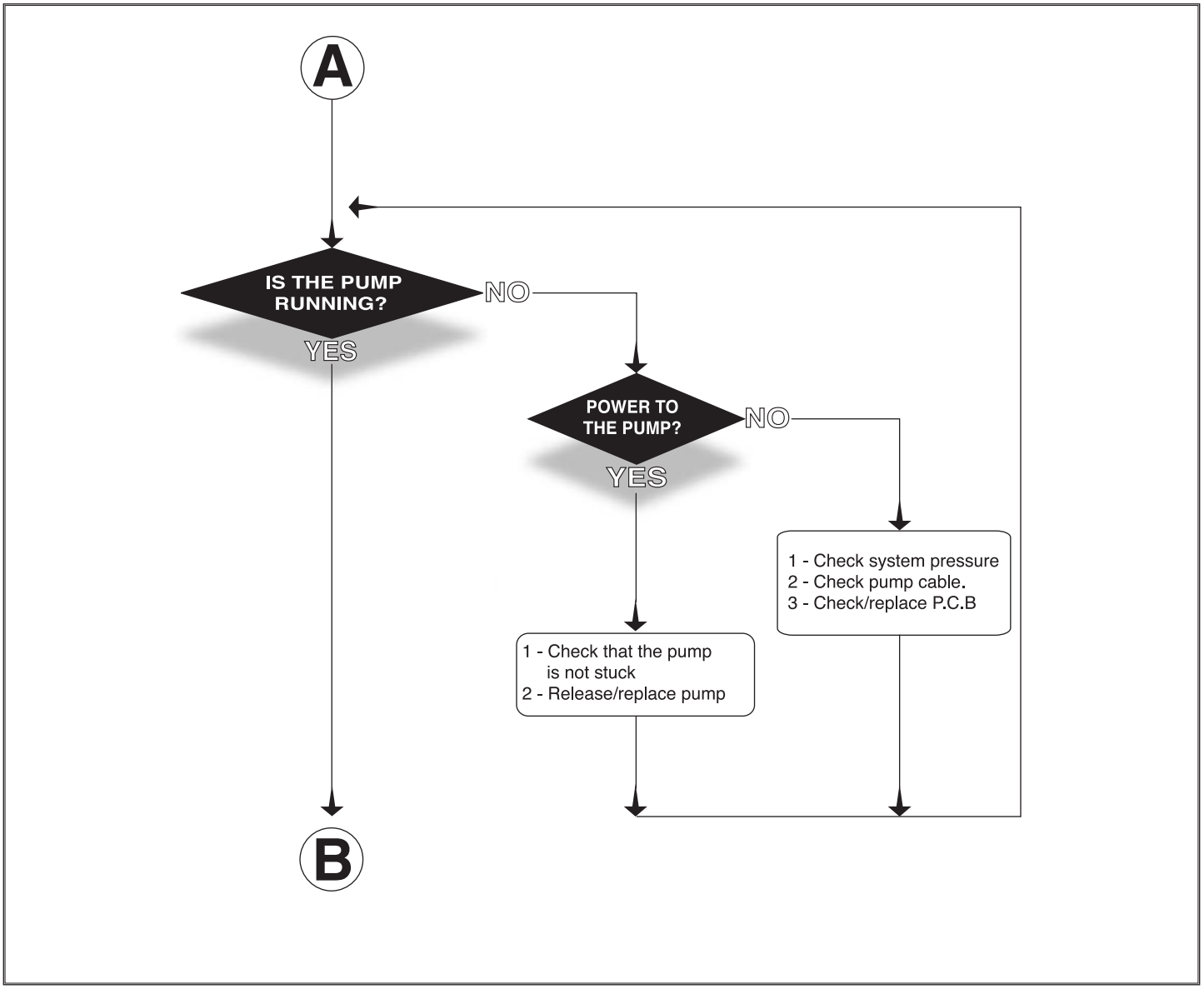
A
IS THE PUMP RUNNING?
NO
YES
POWER TO THE PUMP?
NO
YES
1 - Check system pressure
2 - Check pump cable.
3 - Check/replace P.C.B
1 - Check that the pump is not stuck
2 - Release/replace pump
B

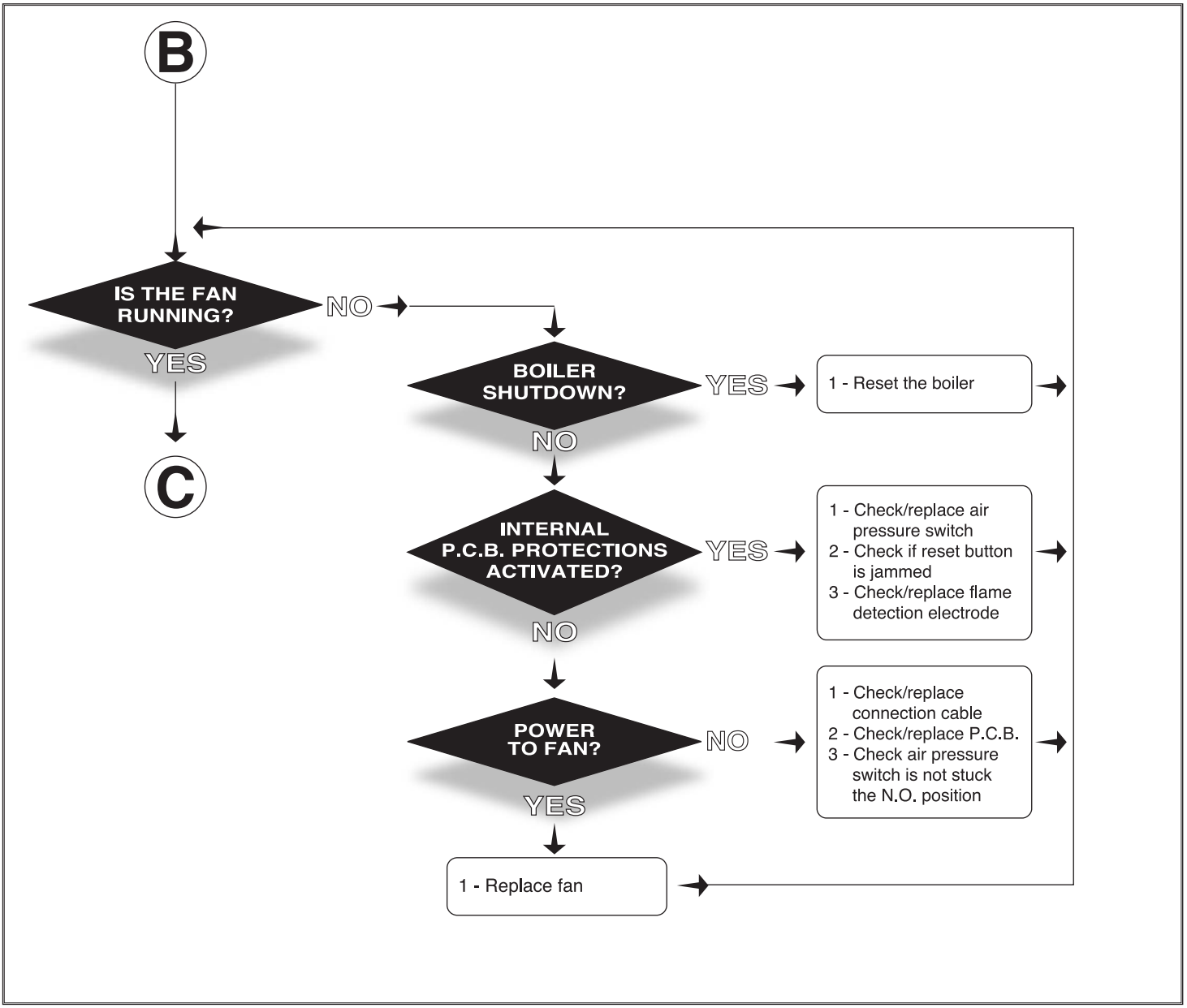
B
IS THE FAN RUNNING?
NO
YES
C
BOILER SHUTDOWN?
YES
1 - Reset the boiler
NO
INTERNAL P.C.B. PROTECTIONS ACTIVATED?
YES
1 - Check/replace air pressure switch
2 - Check if reset button is jammed
3 - Check/replace flame detection electrode
NO
POWER TO FAN?
NO
1 - Check/replace connection cable
2 - Check/replace P.C.B.
3 - Check air pressure switch is not stuck the N.O. position
YES
1 - Replace fan

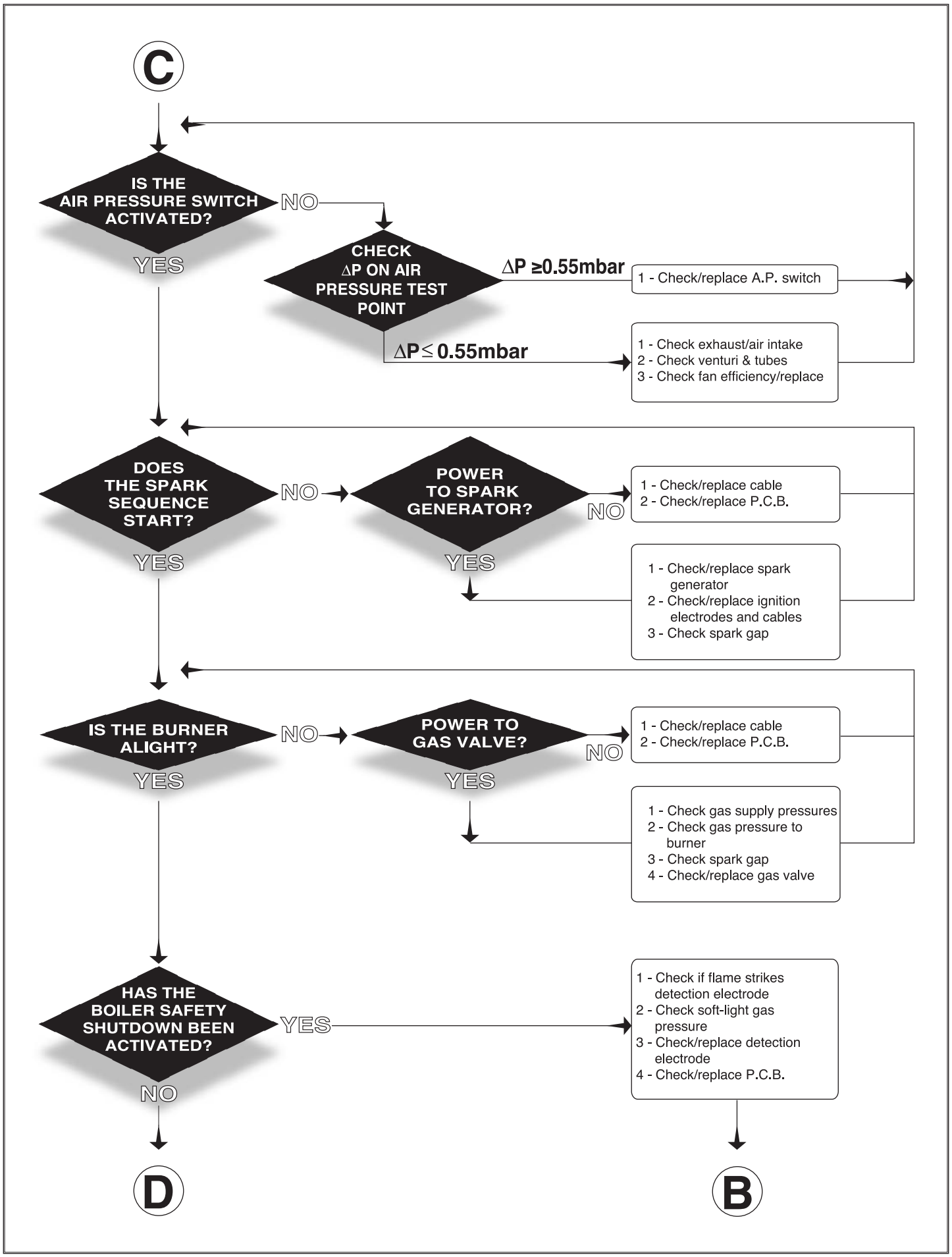
C
IS THE AIR PRESSURE SWITCH ACTIVATED?
NO
YES
CHECK ΔP ON AIR PRESSURE TEST POINT
ΔP ≥0.55mbar
1 - Check/replace A.P. switch
ΔP≤ 0.55mbar
1 - Check exhaust/air intake
2 - Check venturi & tubes
3 - Check fan efficiency/replace
DOES THE SPARK SEQUENCE START?
NO
YES
POWER TO SPARK GENERATOR?
NO
YES
1 - Check/replace cable
2 - Check/replace P.C.B.
1 - Check/replace spark generator
2 - Check/replace ignition electrodes and cables
3 - Check spark gap
IS THE BURNER ALIGHT?
NO
YES
POWER TO GAS VALVE?
NO
YES
1 - Check/replace cable
2 - Check/replace P.C.B.
1 - Check gas supply pressures
2 - Check gas pressure to burner
3 - Check spark gap
4 - Check/replace gas valve
HAS THE BOILER SAFETY SHUTDOWN BEEN ACTIVATED?
YES
NO
1 - Check if flame strikes detection electrode
2 - Check soft-light gas pressure
3 - Check/replace detection electrode
4 - Check/replace P.C.B.
D
B

D

IS THERE STILL A PROBLEM?

YES

NO

NORMAL OPERATION

	FAULT LIST	POSSIBILE CAUSES
1	Drawing D.H.W: When you turn on a tap burner switches off	- Check D.H.W temperature probe - faulty D.H.W. flow switch
2	Drawing D.H.W: insufficient hot water temperature	- check C.H./D.H.W. temperature probes - check gas pressures - check water flow rate - check heat exchanger
3	Drawing D.H.W: noisy operation	- heat exchanger faulty or lime-scale deposits - low heating system water pressure - check gas pressures - check C.H./D.H.W. temperature probes
4	Decrease/increase of heating circuit pressure	- check for leaks on the heating circuit - faulty filling-loop - faulty heat exchanger - expansion vessel faulty
5	Repeated shutdowns	- faulty detection electrodes - check gas settings - check ignition electrodes - check spark generator - check gas valve
6	Repeated operation of safety thermostat	- C.H. temperature probe open circuit - overheat thermostat not calibrated correctly - air in primary water circuit
7	When cold water tap turned off, the boiler ignites	- drop in pressure in the water mains, with consequent water hammer
8	Insufficient radiator temperature	- check C.H. temperature probe - check by-pass - check gas pressures - check pump

8. SHORT SPARE PARTS LIST

microCombi 23/27 MFFI

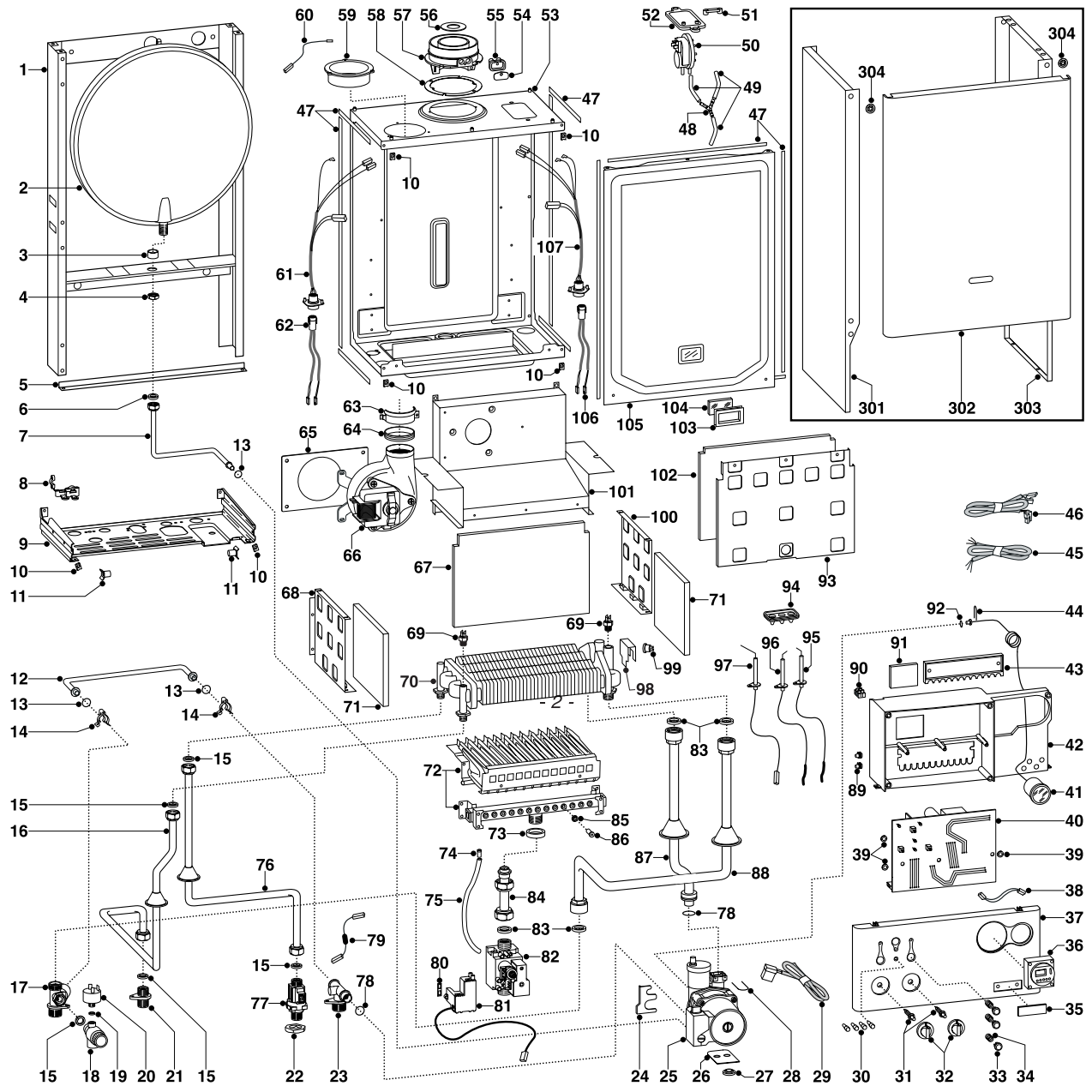

Key no.	G.C. part no.	Description		ARISTON Part No.
2	E61 468	Expansion vessel		998616
6	164 282	Gasket 3/8"		573521
15	164 229	Gasket 1/2"		573528
18		Safety valve (1/4" 3 bar)		998447
19	164 261	Gasket 1/4"		569390
20		Pump pressure switch		995903
23		Return group		996047
25A	E61 490	Pump		998836
25B		Pump		999091
36		Time clock		999599
40A		P.C.B. (T2 MFFI)		999724
40B		P.C.B. (27 MFFI)		65100248
41	E61 520	Pressure gauge		999245
50A		Air pressure switch		998484
50B		Air pressure switch		571651
64		Gasket (Fan)		995349
66A		Fan (23 kW)		999397
66B		Fan (27 kW)		998894
69		Temperature probe		998458
70		Exchanger		998619
72A	E61 547	Burner 12 ramp (natural gas)		996158
72B		Burner 13 ramp (natural gas)		995991
77		D.H.W. Flow Switch		996072
78	E61 483	O-ring		998424
80		Gasket		574279
81A		Spark Generator		999919
81B		Spark Generator		65100249
82A	E61 485	Gas valve (SIT 845 SIGMA)		997089
82B		Gas valve (HONEYWELL)		65100244
83	164 225	Gasket 3/4"		573520
86		Burner jet (natural gas 1.30)		998433
92		Gasket		998517
95A	E61 565	Electrode (ignition R.H.)		998623
95B		Electrode (ignition R.H.)		65100251
96A	E61 567	Electrode (ignition L.H.)		998622
96B		Electrode (ignition L.H.)		65100250
97	E61 569	Detection electrode		998624
99	E25 425	Thermostat (overheat)		996065
321	E61 665	Burner jet 1.30 full kit (natural gas)		998716
322	E61 667	Burner jet 0.77 full kit (LPG)		998717

NOTES

9. TECHNICAL INFORMATION

		mfc Combi 23 MFFI	mfc Combi 27 MFFI
CE Certification		63AU4547	0694BM3512
Heat Input	max/min kW	25.6/11.0	29.3/11.0
Heat Output	max/min kW	23.7/9.6	27/9.3
Efficiency of Nominal Heat Input	%	92.5	92
Efficiency at 30% of Nominal Heat Input	%	90.5	88.8
Heat Loss to the Casing (ΔT=50°C)	%	1.0	1.3
Flue Heat Loss with Burner Operating	%	6.5	6.7
Flue Heat Loss with Burner Off	%	0.4	0.4
Max Discharge of Products of Combustion (G20)	Kg/h	51	57.7
Residual Discharge Head	mbar	0.96	1.41
Consumption at Nominal Capacity(G20)	m^3/h	2.72	3.10
Gas Consumption after 10 Minutes*	m^3	0.32	0.36
(15°C, 1013 mbar) (G30-G31)	Kg/h	2.02/2.00	2.31/2.27
Temp. of exhaust fumes at nominal capacity	°C	126	148.5
CO_2 Content	%	7.0	7.1
O_2 Content	%	8.0	8.0
CO Content	ppm	38	53
Minimum Ambient Temperature	°C	+5	+5
Head Loss on Water Side (max) (ΔT=20°C)	mbar	200	200
Residual Head of System	bar	0.25	0.25
Heating Temperature	max/min °C	82/42	82/42
Domestic Hot Water Temperature (approx)	max/min °C	54/36	56/36
D.H.W. Flow Rate ΔT=35°C	l/min	9.7	11.0
D.H.W. Minimum Flow Rate	l/min	2.5	2.5
Pressure of Domestic Hot Water	max/min bar	6/0.2	6/0.2
Expansion Vessel Capacity	l	6	6
Expansion Vessel Pre-load Pressure	bar	1	1
Maximum Water Content of System	l	130	130
Maximum Heating Pressure	bar	3	3
Nominal Pressure Natural Gas (G20)	mbar	20	20
LPG (G30-G31)	mbar	30-37	28-37
Electrical Supply	V/Hz	230 / 50	230/50
Power Consumption	W	135	155
Protection Grade of Electrical System	IP	X4D	X4D
Internal Fuse Rating		FAST 2 AT	FAST 2 AT
Weight	Kg	39	41
G.C. Number		**47-116-16**	**47-116-24**

*Calculated at 70% maximum output

Manufacturer: **Merloni TermoSanitari SpA - Italy**

Commercial subsidiary: **MTS (GB) LIMITED**
MTS Building
Hughenden Avenue
High Wycombe
Bucks HP13 5FT

Telephone: (01494) 755600

Fax: (01494) 459775

Internet: http://www.ariston.co.uk

E-mail: info@uk.mtsgroup.com

Technical Service Hot Line: (01494) 539579

0 99 84 1589 311 Edition 1 Revision 1 - 10/07/03

microCombi

End User Manual

microCombi 23 MFFI
microCombi 27 MFFI

Leave These Instructions With the End User

ARISTON

benchmark™
COLLECTIVE MARK

The code of practice for the installation, commissioning & servicing of central heating systems

CE

Country of destination: GB / IE

Dear Customer,

Thank you for choosing an ARISTON boiler.
We guarantee that your boiler is a reliable and technically sound product.
This manual provides detailed instructions and recommendations
for proper installation, use and maintenance.
Remember to keep this manual in a safe place for future reference
i.e. by the gas meter.
Your local MTS Servicing Centre is at your complete
disposal for all requirements.

MTS GROUP

The guarantee on this appliance is valid for 12 months from the first day of installation.

Repairs to the electric, hydraulic or gas circuits may be carried out only by your local authorised MTS Servicing Centre.

Every attempt has been made to avoid errors of any kind
in this manual, the Management invites customers to inform
of any inaccuracies which they may find.
This will help to improve our service

TABLE OF CONTENTS

1.	**General Information**	page 3
	Technical Information	page 3
	Control Panel	page 4
2.	**Operating Instructions**	page 4
3.	**Useful Information and Troubleshooting**	page 6
4.	**Maintenance**	page 7
5.	**Change of Gas Type**	page 7
6.	**Time Clock**	page 7

Important!
Please read this manual carefully.
For additional information, please consult the "*Installation and Servicing Instructions.*"
Make sure to keep the manuals provided with the appliance so that they can be used by the end-user, installer or local service agent.

MTS (GB) Limited support the benchmark initiative. Your installer will give you, and show you how to use, a Log Book which will give you important information about your boiler, and heating system. Please have this Log Book to hand whenever you contact a service engineer or us.

All CORGI Registered Installers carry a CORGI ID card, and have a registration number. Both should be recorded in your boiler Logbook. You can check your installer is CORGI registered by calling CORGI direct on :- (01256) 372300.

This is a combined appliance for the production of Central Heating (C.H.) and Domestic Hot Water (D.H.W.). This appliance **must be used only** for the purpose for which it is designed. The manufacturer declines all liability for damage caused by improper or negligent use.

Do not allow children or inexperienced persons to use the appliance without supervision.

If you smell gas in the room, **do not** turn light switches on or off, use the telephone or any other object which might cause sparks.

Open doors and windows immediately to ventilate the room.

Shut the gas mains tap (on the gas meter) or the valve of the gas cylinder and call your Gas Supplier immediately.

If you are going away for a long period of time, remember to shut the mains gas tap or the gas cylinder valve. Consult the Installation and Servicing manual when turning off the boiler for long periods of time.

Before any intervention within the boiler it is first necessary to isolate the electrical supply by turning the external switch to "OFF".

Technical Information

GENERAL DATA		**23 kW**	**27 kW**
Heating input max-min	*kW*	*25.6-11.0*	*29.3-11.0*
Heating output max-min	*kW*	*23.7-9.6*	*27/9.27*
Efficiency at Maximum Thermal Capacity (see installation instructions)	*%*	*92.5*	*92*
CENTRAL HEATING			
Operating Temperature max-min	*°C*	*82-42*	*82-42*
Maximum-Minimum *Heating Pressure*	*bar*	*3-0.7*	*3-0.7*
Built-in expansion vessel - Total capacity	*litres*	*6*	*6*
DOMESTIC HOT WATER			
Temperature of Water for Domestic Use (max-min)	*°C*	*54-36*	*56-36*
Working pressure max-min	*bar*	*6-0.2*	*6-0.2*
Flow rate ΔT 35°C	*l/min*	*9.7*	*11.0*
Minimum flow rate	*l/min*	*2.5*	*2.5*
ELECTRICAL DATA			
Electrical Supply/ Frequency	*V/Hz*	*230/50*	*230/50*
Power Consumption	*W*	*135*	*155*
Protection of Electrical System	*IP*	*X4D*	*X4D*
CATEGORY			
Nominal Pressure Methane Gas (G20)	*mbar*	*20*	*20*
Nominal Pressure Liquid Gas (G30-G31)	*mbar*	*29-37*	*29-37*

Control Panel

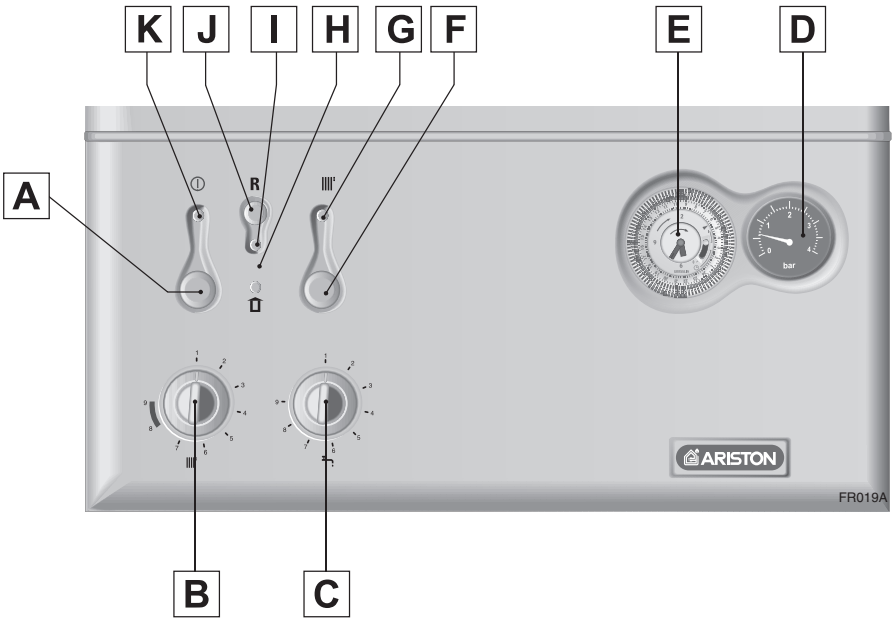

Legend:

A - On/Off button

B - Central heating temperature adjustment

C - Domestic hot water temperature adjustment

D - Heating system pressure gauge

E - Time clock

F - Central heating selector

G - Central heating L.E.D. (green)

H - Flue sensor L.E.D. (yellow)

I - Overheat and/or ignition failure (lockout) L.E.D. (red)

J - Ignition failure (lockout) and/or overheat reset button

K - ON/OFF L.E.D. (green)

2. OPERATING INSTRUCTIONS

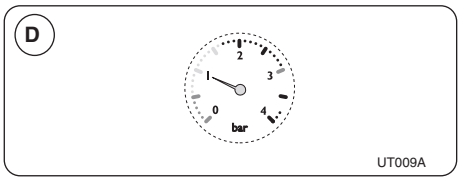

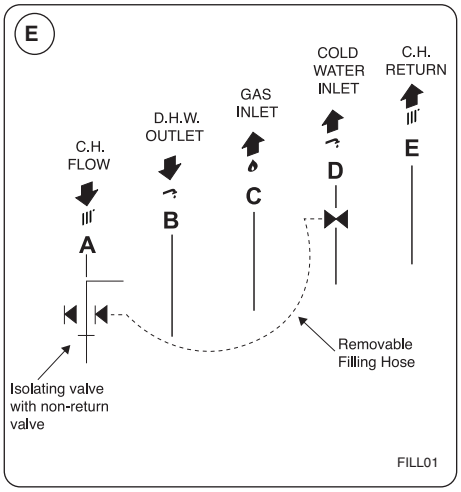

Caution

In the United Kingdom installation, start-up, adjustments and maintenance must be performed by a CORGI Registered Installer in accordance with the installation standards currently in effect, as well as with any and all local health and safety standards i.e.. CORGI.

In the Republic of Ireland the installation and initial start up of the appliance must be carried out by a Competent Person in accordance with the current edition of I.S.813 "Domestic Gas Installations", the current Building Regulations, reference should also be made to the current ETCI rules for electrical installation.

Helpful Suggestions

To get the most out of your boiler, we have provided you with some useful advice on proper use and maintenance:

- Periodically check the system pressure using the pressure gauge **"D"**, make sure that the pressure is at 1.5 bar when the system is off and cool. If the pressure is below the minimum recommended value (1 bar), consult your installer for checking and refilling the system, an example of how a filling loop should be fitted is shown to the left **"E"**.

  Note: Do not under any circumstances use the appliance with the pressure gauge reading zero.

- The outer panels of the unit's case must only be cleaned with a damp cloth. Do not use abrasive cleaners. The control panel can be wiped with either a damp or dry cloth. Spray polishes must not be used on the control panel surface or knobs. Care must be taken to prevent any liquid from entering the appliance.

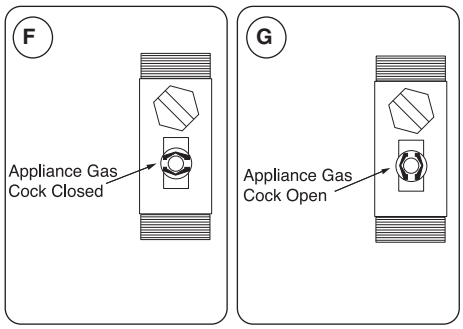

Practical tips

- If the water is very hard, it is recommended that a water softener or in-line scale reducer be added to the system so as to reduce the formation of limescale in the boiler exchangers. This will ensure that the efficiency of the unit remains the same over time, reducing gas consumption and maintenance costs.
- If the boiler should be out of use for a prolonged period, it is recommended that the electrical power supply be disconnected and that the external gas cock **"F"** and **"G"** be closed. If low temperatures are expected, the boiler and system pipe work should be drained in order to prevent frost damage.
- To improve comfort and take full advantage of the heat produced by the boiler, it is recommended that an external (room) thermostat be installed.
- It is good practice to clean and service the appliance and central heating system every year. Call a local Service Agent.

Ignition procedure

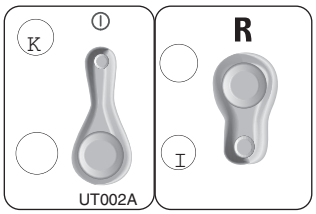

Press button **"A".** The green L.E.D. **"K"** will illuminate indicating that the boiler is ready to operate. The centralised electronic control unit will ignite the burner, upon demand for either C.H. or D.H.W. If, after approximately 10 seconds, the burner has not ignited, the boiler safety devices will shut off the gas and the red L.E.D. **"I"** illuminates. To reset the ignition system, the reset **"J"** must be pressed and released. Should the boiler fail to ignite a second time, check that the external gas cock is open. If the problem persists, contact a local Service Agent. **Important!! Always wait 2 minutes before resetting each time.**

Winter and summer operating modes

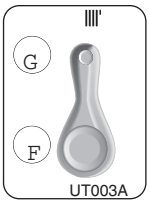

In the 'winter operating mode', the boiler will produce both central heating and domestic hot water. In the 'summer operating mode', the boiler will produce only domestic hot water. Press **"F"** button to select winter mode. The green L.E.D. **"G"** will illuminate.

Adjusting the heating

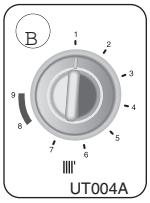

It is possible to set the temperature of the heating system by adjusting the knob **"B"**.
By positioning the indicator somewhere between 1 and 9, a temperature may be obtained which varies from approximately 42˚C to about 82˚C.

External (room) thermostat control

If an external (room) thermostat is installed, it is recommended that the temperature of the heating system be set by means of the **"B"** knob, leaving it at 7-8 position in order to obtain the best performance from the boiler and to allow the regulation of the external temperature to function efficiently.

Setting the hot water for domestic use

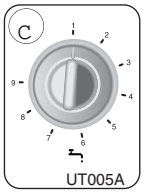

Both in the winter and summer mode, the temperature of the domestic hot water may be adjusted by using the **"C"** knob. A delivery temperature for the water may be chosen in a range from 36˚C to about 54˚C, depending on the flow rate of the water and the position of the knob between 1 and 9 settings. **Note: Should the Domestic Hot Water not be hot enough, it may be necessary to slow the flow rate from the hot water outlet being used.**

Turning off the central heating

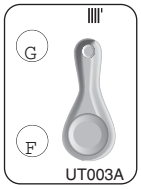

To turn off the Central Heating, press the **"F"** button; the respective green L.E.D. **"G"** will go off. The boiler will stay in summer mode, only providing Domestic Hot Water

Turning off the boiler

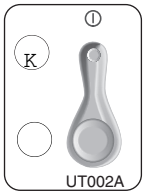

To turn the boiler off, press the button **"A"**; the respective green L.E.D. **"K"** will go off. Close the gas cock located under the boiler by inserting a screw driver into the bottom slot **(See F & G)** and turning 1/4 turn clockwise until it stops (slot horizontal). It is also necessary to turn the electricity supply switch (located outside the boiler) to the OFF position.

3. USEFUL INFORMATION AND TROUBLESHOOTING

Boiler shutdown situations

The boiler is equipped with safety devices that intervene in certain situations and shut it off. Most of these situations are communicated by means of the L.E.D.s and at times the user may be able to remedy them.

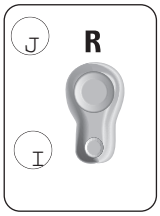

Shutdown due to ignition failure

In the event that the automatic ignition of the burner has failed, the red L.E.D. **"I"** will illuminate. In order to reset the ignition, the button **"J"** must be pressed and released. Should the boiler fail to ignite a second time, check that the external gas cock is open. If the problem persists, contact a local Service Agent. **Important!! Always wait 2 minutes before resetting each time.**

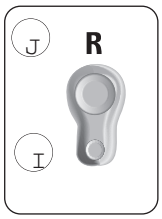

Shutdown due to overheating

In the event that the safety limit is exceeded for the temperature of the water in the boilers exchanger, the thermostat shuts off the boiler and the red L.E.D. **"I"** illuminates.
To remedy this situation, wait a few minutes to allow the exchanger to cool down, then press and release the reset button **"J"**.
If this situation occurs frequently, contact a local Service Agent.

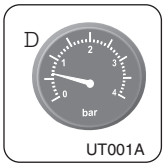

Shutdown due to insufficient water circulation

If the boiler is off, one possible cause for this state is an insufficient pressure of water in the system.
Check the system pressure on the pressure gauge **"D"** and if it is less than 0.5 bar, re-pressurise the system as instructed by your installer, should you be unsure some basic instructions are provided hereafter;

Ensure that the filling loop hose is connected to the cold water inlet pipe and to either the Central Heating flow or return

Open the handle/s or tap/s to allow water into the Central Heating system

Once the needle on the pressure gauge reaches 1 Bar, close the handle/s or tap/s and disconnect the filling loop hose

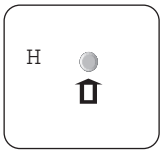

Should it still be unclear how to proceed, please consult your installer.

If the boiler does not start up again, contact a local Service Agent.
If there are frequent drops in pressure within the system, have a plumber check the heating system for possible water leaks.

Temporary shutdown due to defective discharge of exhaust produts

The boiler is fitted with safety devices, which in the event of a defective discharge of exhaust products, automatically interrupts the gas supply, thereby shutting off the boiler. The shut-off of the boiler is temporary and is indicated by the illumination of the yellow L.E.D. **"H"** for a period of about 15 minutes.
Once this time period has passed and the discharge state of exhaust system has returned to normal, the boiler automatically turns back on.
Important!
If this situation occurs frequently, contact a local Service Agent so that they may check that the exhaust fumes are being expelled correctly, that the flue is installed correctly and that the area is ventilated properly.

4. MAINTENANCE

Schedule an annual maintenance check-up for the boiler with a competent person.
Correct maintenance always results in savings in the cost of running the system.

5. CHANGE OF GAS TYPE

Our boilers are designed to function either with Natural Gas (methane) or LPG gas. If you need to changeover from one gas to the other, one of our local Service Agents should be contacted.

6. TIME CLOCK

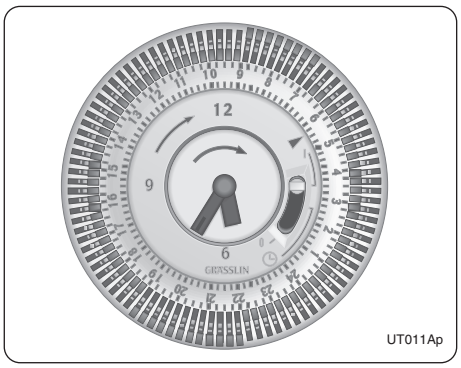

Note: *the time clock is for Central Heating control only.*
The time clock is provided with 96 switches, called riders, each of which covers a time interval of 15 minutes (four per hour).
When a rider is switched from the inside (off setting) to the outside of the clock border (on setting), the circuit is closed (switch on) for a period of 15 minutes and then the boiler starts if the room thermostat (if installed) or the heating thermostat require heat (heating function on).

EXAMPLE
To set the heating of your home in the time interval from 7.00 am to 9.30 am and from 7.00 pm to 10.00 pm every day:
- rotate the outer ring of the clock in a clockwise direction until the correct time of day (24h) lines up with the arrow on the clock (at approx. 2 o'clock position);
- **under no circumstances should the minute hand be moved manually**;
- make sure all the switches, i.e. the riders, are placed on the inside of the clock border;
- pull outward the riders for 7.00 am and 9.30 am, and then all riders between these two;
- repeat this for 7.00 pm and 10.00 pm.
  Other heating intervals may be set in the same way.

The clock is provided with a selector switch with three positions (see figure):

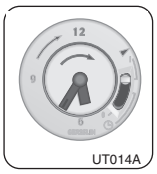

1. **Position "I"** CONSTANT: in this position, the clock circuit is always closed (switch on), therefore the boiler will constantly be on and will only shut off upon the request of the room thermostat (if installed) or the heating thermostat;

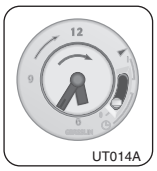

2. **Position "O"** HEATING OFF: in this position, the clock circuit is always open (switch off) and the boiler will therefore never ignite for heating;

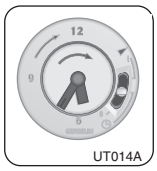

3. **"Central" Position** PROGRAMMING ACTIVE: in this position, the programme set by the user is active.

Technical Data

Ambient temperature: - 10°C to + 55°C
Shortest switching time: 15 minutes
Programmable: Every 15 minutes

Manufacturer: **Merloni TermoSanitari SpA - Italy**

Commercial subsidiary: **MTS (GB) LIMITED**
MTS Building
Hughenden Avenue
High Wycombe
Bucks HP13 5FT
Telephone: (01494) 755600
Fax: (01494) 459775
Internet: www.ariston.co.uk
E-mail: info@uk.mtsgroup.com
Technical Service Hot Line: (01494) 539579

Cod. 2399841567111 - Edition 1 Revision 1 - 11/07/03

ARISTON

SPARE PARTS EXPLODED VIEW

WALL-HUNG GAS BOILERS
Model

microCombi 23 MFFI

Edition 4
Current from Serial No:- 2320209500001 to ----------

PROFESSIONAL TEAM

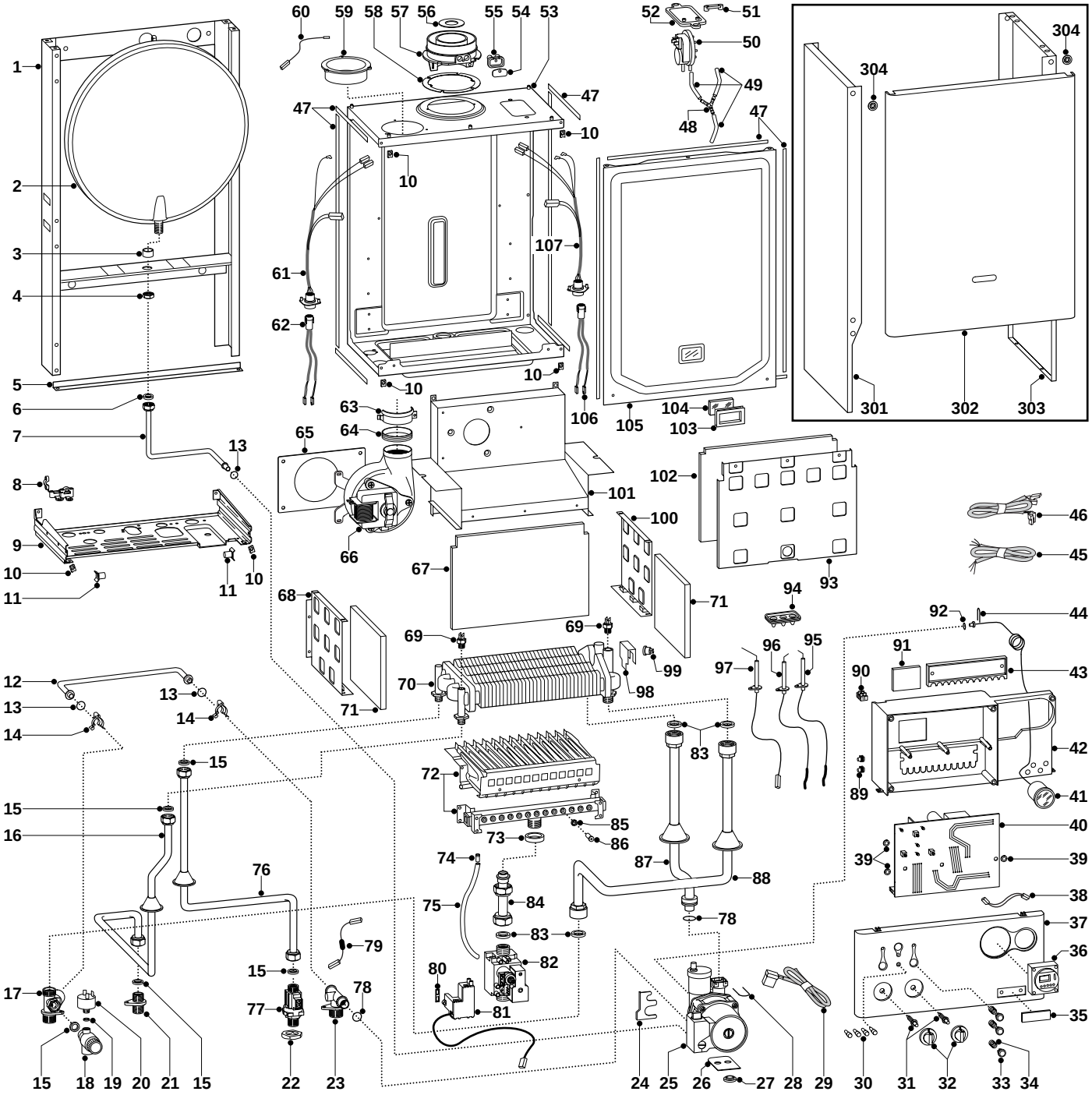

MODEL	CHARACTERISTICS	SERIAL NO: VALIDITY	REF.
MicroCombi 23 MFFI	METHANE	2320209500001	A

ER20022110171104001

PART.	CODE	DESCRIPTION	REF.	NOTE
1	------	Frame		11
2	998616	Expansion vessel		
3	998776	Bush		
4	998581	3/8" lock nut		
5	995393	Frame support		
6	573521	Gasket 3/8"		
7	999525	Pipe (expansion vessel)		
8	998580	Cable holder		
9	------	Hydraulic group support		11
10	570717	Spring (fastening)		
11	995492	Pivot		
12	998589	By-pass pipe		
13	998077	O-ring gasket		
14	998064	Spring (by-pass pipe)		
15	573528	Gasket 1/2"		
16	999104	Pipe (D.H.W. outlet)		
17	996049	Flow group (twin pass)		
18	998447	Safety valve (1/4" 3 Bar)		
19	569390	Gasket 1/4"		
20	995903	Low water pressure switch		
21	998611	Union (hot water outlet)		
22	573530	Lock nut 1/2"		
23	996047	Return group		
24	999162	Pump bracket		
25	998836	Pump		
26	995364	Spacer plate (pump)		
27	999100	Lock washer		
28	997153	U-clip		
29	999968	Cable (pump)		
30	998577	Led (L=14.2)		
31	999592	Spindle (knobs)		
32	999596	Control knob		
33	999976	Push button		
34	999595	Spring (push button)		
35	997824	Name badge (plastic)		
36	999599	Clock		
37	995461	Control panel		
38	999721	Clock cable		
39	569711	Nylon bush (10mm)		
40	999724	P.C.B. (T2 MFFI)		
41	999245	Pressure gauge		
42	------	Control panel		11
43	998953	Cable holder cover		
44	571548	Clip (main flow switch)		
45	999521	Cable (power supply)		
46	998635	Low voltage wiring		
47	998516	Gasket (adhesive 10x6)		
48	573327	"Y" piece (air pressure)		
49	571575	Silicone pipe (positive signal)		
50	998484	Air pressure switch		
51	573329	Pressure intake cover		
52	997203	Support plate (air pressure switch)		
53	------	Sealed chamber		11
54	998565	Cover (flue test point)		
55	998636	Gasket (flue test point)		
56	999980	Restrictor (flue - exhaust manifold/header)		
57	999561	Flue (exhaust manifold/header)		
58	998637	Gasket (flue collar)		
59	998595	Plug (air intake)		
60	999925	Earth cable (sealed chamber)		
61	995318	Fan cable & sensor		
62	995319	Fan cable & sensor		
63	998566	Fixing clamp (fan)		
64	995349	Gasket (fan)		
65	999135	Panel (insulation - fan)		

ER20022110171040 01

PART.	CODE	DESCRIPTION	REF.	NOTE
66	999397	Fan		
67	998640	Panel (insulation - rear)		
68	995893	Panel (combustion chamber - L.H. side)		
69	998458	Temperature probe		
70	998619	Exchanger (twin pass)		
71	998639	Panel (insulation - side)		
72	996158	Burner 12 ramp (natural gas)		
73	569443	Silicone seal		
74	573325	Rivet		
75	573576	Compensation tube		
76	996159	Pipe (cold water inlet)		
77	996072	D.H.W. flow switch (Bitron)		
78	998424	O-ring (C=4 D=17.04)		
79	999495	Cable (D.H.W. flow switch - 15 Ohm resistance)		
80	574279	Gasket (IP44 NAC 504)		
81	999919	Spark generator		
82	997089	Gas valve (SIT 845 SIGMA)		
83	573520	Gasket 3/4"		
84	998729	Pipe (gas valve)		
85	572138	Burner jet washer		
86	998433	Burner jet (N.G. 1.30)		
87	998731	Pipe (C.H. return)		
88	998727	Pipe (C.H. flow)		
89	569720	Blind grommet		
90	571787	Terminal board (two pole)		
91	997745	Control panel cover (rear)		
92	998517	Gasket		
93	996134	Panel (combustion chamber - front)		
94	998147	Ignition electrode cable rubber		
95	998623	Electrode (Ignition R.H.)		
96	998622	Electrode (Ignition L.H.)		
97	998624	Detection electrode		
98	998582	Fixing spring (overheat thermostat)		
99	996065	Thermostat (overheat - 103°C)		
100	995892	Panel (combustion chamber - R.H. side)		
101	999385	Flue hood		
102	995995	Panel (insulation - front)		
103	998076	Gasket (sight glass)		
104	998075	Sight glass		
105	999151	Panel (front - sealed chamber)		
106	999929	Cable (P.C.B./air pressure switch)		
107	999425	Wiring (air pressure switch/probe)		
301	998477	Case panel (L.H. side)		
302	999316	Case panel (front)		
303	998476	Case panel (R.H. side)		
304	995305	Washer		
311	995304	D.H.W. inlet filter		12 13
321	998716	Burner jet (full kit - N.G.)		12
322	998717	Burner jet (full kit - L.P.G.)		12

NOTE	DESCRIPTION
11	Not supplied as a spare part
12	Not illustrated
13	Flow meter filter installed on the cold water inlet

ER20022110171040 01

PART.	NOTIFICATION OF CHANGES	
	Spares listed below are not interchangeable with those in Ed.1, Ed.2 and Ed.3	
5	995393 - Frame support	- replaces code 999594 from serial number: 2320209500001
11	995492 - Pivot	- replaces code 998569 from serial number: 2320209500001
12	998589 - By-pass pipe	- replaces code 999923 from serial number: 2320209500001
14	998064 - Spring (by-pass pipe)	- not listed on original drawing
17	996049 - Flow group	- replaces code 998612 from serial number: 2320209500001
20	995903 - Low water pressure switch	- replaces code 998627 from serial number: 2320209500001
22	573530 - Lock nut (½")	- not listed on original drawing
23	996047 - Return group	- replaces code 995344 from serial number: 2320209500001
26	995364 - Spacer plate (pump)	- replaces code 999602 from serial number: 2320209500001
29	999968 - Cable (pump)	- not listed on original drawing
30	998577 - L.E.D. (L=14.2)	- replaces code 999593 from serial number: 2320209500001
37	995461 - Control panel	- replaces code 999384 from serial number: 2320209500001
40	999724 - P.C.B. (T2 MFFI)	- replaces code 999410 from serial number: 2320209500001
46	998635 - Low voltage wiring	- replaces code 999387 from serial number: 2320209500001
60	999925 - Earth cable (sealed chamber)	- not listed on original drawing
61	995318 - Cable (fan/sensor)	- replaces code 998633 from serial number: 2320209500001
62	995319 - Cable (P.C.B./fan)	- not listed on original drawing
64	995349 - Gasket (fan)	- replaces code 995320 from serial number: 2320209500001
68	995893 - Panel (combustion chamber (L.H.)	- replaces code 998600 from serial number: 2320209500001
72	996158 - Burner (12 ramp - N.G.)	- replaces code 998618 from serial number: 2320209500001
76	996159 - Pipe (cold water inlet)	- replaces code 999394 from serial number: 2320209500001
77	996072 - D.H.W. flow switch (Bitron)	- not listed on original drawing (new design)
79	999495 - Cable (D.H.W. flow switch - 15 Ohm)	- not listed on original drawing
81	999919 - Spark generator	- replaces code 998645 from serial number: 2320209500001
90	571787 - Terminal board (two pole)	- not listed on original drawing
91	997745 - Control panel cover (rear)	- not listed on original drawing
93	996134 - Panel (combustion chamber - front)	- replaces code 999151 from serial number: 2320209500001
99	996065 - Thermostat (overheat 103°C)	- replaces code 997206 from serial number: 2320209500001
100	995892 - Panel (combustion chamber - R.H.)	- replaces code 998599 from serial number: 2320209500001
102	995995 - Panel (insulation - front)	- replaces code 995995 from serial number: 2320209500001
106	999929 - Cable (P.C.B./air pressure switch)	- not listed on original drawing