micro GENUS

Installation Instructions
Type C Boilers

G.C.N: 47-116-14
47-116-15

LEAVE THESE INSTRUCTIONS WITH THE END-USER

benchmark™

The code of practice for the installation, commissioning & servicing of central heating systems

ARISTON

Country of destination: GB

TABLE OF CONTENTS

1. GENERAL INFORMATION

1.1 General Instructions
1.2 Overall View

2. INSTALLATION

2.1 Reference Standards
2.2 Siting the Appliance
2.3 Overall Dimensions
2.4 Clearances
2.5 Mounting the Appliance
2.6 Electrical Connection
2.7 Gas Connection
2.8 Water Connections
2.9 Flue Connection
2.10 Room Thermostat Connection
2.11 Electrical/System Diagrams
2.12 Water Circuit Diagrams

3. COMMISSIONING

3.1 Initial Preparation
3.2 Control Panel
3.3 Removing the Front Panel
3.4 Initial Start up
3.5 Operational Adjustments
3.6 Combustion Analysis
3.7 Fume Discharge Monitoring
3.8 Boiler Safety Systems
3.9 Draining the System

4. GAS ADJUSTMENTS

Gas Adjustment Table
4.1 Changing the Type of Gas

5. MAINTENANCE

6. MISCELLANEOUS

6.1 Wiring Diagram for Two Heating Zones
6.2 Wiring Diagram for Connection to an Ariston Unvented Cylinder

7. TECHNICAL INFORMATION

1. GENERAL INFORMATION

This manual is an integral and essential part of the product. It should be kept with the appliance so that it can be consulted by the user and our authorised personnel.

Please carefully read the instructions and notices about the unit contained in this manual, as they provide important information regarding the safe installation, use and maintenance of the product.

For operating instructions please consult the separate User's Manual.

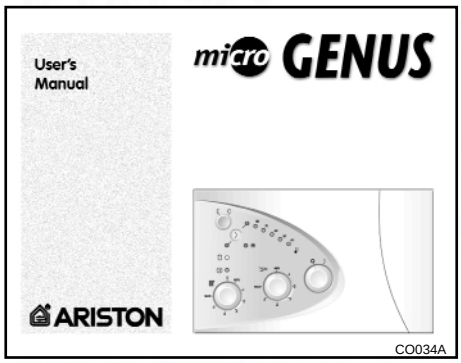

1.1 GENERAL INSTRUCTIONS

Read the instructions and recommendations in these Installation Instructions carefully to ensure proper installation, use and maintenance of the appliance.

Keep this manual in a safe place. You may need it for your own reference while our Servicing Centre technicians or your installer may need to consult it in the future.

This is a combined appliance for the production of central heating (C.H.) and domestic hot water (D.H.W.).

This appliance **must be used only** for the purpose for which it is designed.
The manufacturer declines all liability for damage caused by improper or negligent use.

No asbestos or other hazardous materials have been used in the fabrication of this product.

Before connecting the appliance, check that the information shown on the data plate and the table on pages 4-5 comply with the electric, water and gas mains of the property. You will find the data plate on the reverse of the control panel.
The gas with which this appliance operates is also shown on the label at the bottom of the boiler.

Do not install this appliance in a damp environment or close to equipment which spray water or other liquids.
Do not place objects on the appliance.
Do not allow children or inexperienced persons to use the appliance without supervision.

If you smell gas in the room, **do not turn on** light switches, use the telephone or any other object which might cause sparks.
Open doors and windows immediately to ventilate the room.
Shut the gas mains tap (on the gas meter) or the valve of the gas cylinder and call your Gas Supplier immediately.
If you are going away for a long period of time, remember to shut the mains gas tap or the gas cylinder valve.

Always disconnect the appliance either by unplugging it from the mains or turning off the mains switch before cleaning the appliance or carrying out maintenance.

In the case of faults or failure, switch off the appliance and turn off the gas tap. Do not tamper with the appliance.
For repairs, call your local Authorised Servicing Centre and request the use of original spare parts. For in-guarantee repairs contact MTS (GB) Limited.

Check the following at least once a year:
1 - Check the seals for the water connections; replacement of any faulty seals.
2 - Check the gas seals; replacement of any faulty gas seals.
3 - Visual check of the entire unit.
4 - Visual check of the combustion process or analysis of combustion by-products (see section 3.6) and cleaning of the burner if needed.

5 - If called for by point. 3, dismantling and cleaning of the combustion chamber.
6 - If called for by point. 4, dismantling and cleaning of the burner jets.
7 - Visual check of the primary heat exchanger:
- check for overheating in the blade assembly;
- clean the exhaust fan if needed.
8 - Adjustment of the flow rate of the gas: flow rate for lighting, partial load and full load.
9 - Check of the heating safety systems:
- safety device for maximum temperature;
- safety device for maximum pressure.
10- Check of the gas safety systems:
- safety device for lack of gas or flame ionisation (detection electrode);
- safety device for gas cock.
11- Check of the electrical connection (make sure it complies with the instructions in the manual).
12- Check of domestic hot water production efficiency (flow rate and temperature)
13- General check of the combustion by-products of the discharge/ventilation system.
14- Check of the general performance of the unit.

FIG. 1.0

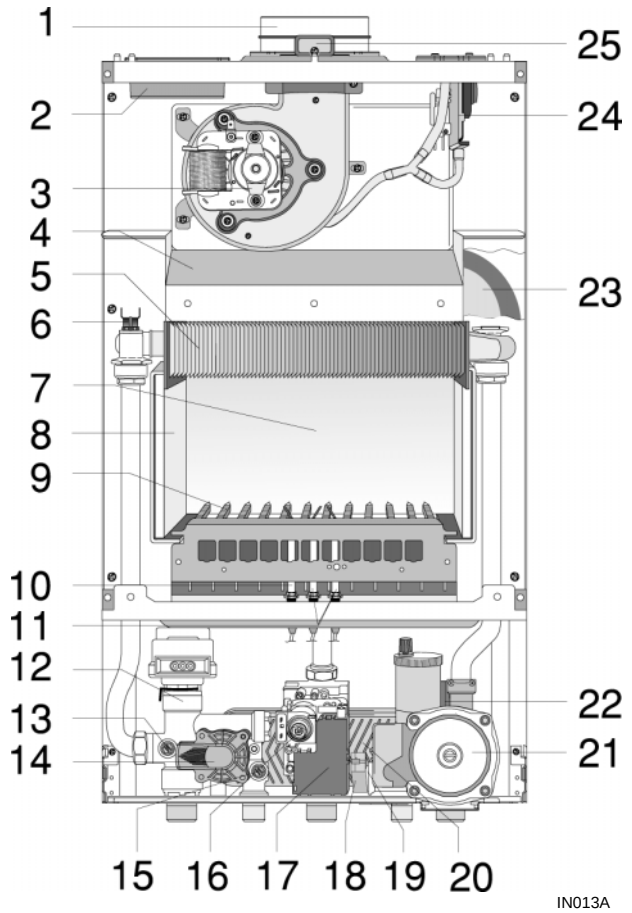

1.2 OVERALL VIEW

LEGEND:

1. Flue connector
2. Air intake for twin pipe flue systems
3. Fan
4. Combustion chamber hood
5. Main heat exchanger
6. Safety thermostat
7. Combustion chamber
8. Combustion chamber insulation panel
9. Burner
10. Detection electrode
11. Ignition electrodes
12. Motorised diverter valve
13. Main circuit temperature probe
14. Main circuit flow switch
15. Domestic hot water temperature probe
16. Gas valve
17. Spark generator
18. Domestic hot water flow switch
19. Domestic cold water inlet filter
20. Secondary heat exchanger
21. Circulation pump with automatic air release valve
22. Safety valve (3 bar)
23. Expansion vessel
24. Air pressure switch
25. Combustion analysis intakes

2. INSTALLATION

The technical information and instructions provided herein below are intended for the installer so that the unit may be installed correctly and safely.

2.1 REFERENCE STANDARDS

The installation and initial start up of the boiler must be by a CORGI Approved Installer in compliance with the installation standards currently in effect, as well as with any and all local health and safety standards i.e.. CORGI .

This appliance must be installed by a competent installer in accordance with current Gas Safety (installation & use) Regulations.

The installation of this appliance must be in accordance with the relevant requirements of the current Gas Safety (installation & use) Regulations, the Local Building Regulations, the current I.E.E. Wiring Regulations, the byelaws of the local water authority, and in Scotland, in accordance with the Building Standards (Scotland) Regulation and Health and Safety document No. 635 “Electricity at work regs. 1989”.
Installation should also comply with the following British Standard Codes of Practice:

Low pressure pipes	BS 6891	1988
Boilers of rated input not exceeding 60 kW	BS 6798	1987
Forced circulation hot water system	BS 5449	1990
Installation of gas hot water supplies for domestic purposes (2nd family gases)	BS 5546	1990
Flues	BS 5440-1	1990
Air supply	BS 5440-2	1989

2.2 SITING THE APPLIANCE

The appliance may be installed in any room or indoor area, although particular attention is drawn to the requirements of the current I.E.E. Wiring Regulations, and in Scotland, the electrical provisions of the Building Regulations applicable in Scotland, with respect to the installation of the combined appliance in a room containing a bath or shower.
Where a room-sealed appliance is installed in a room containing a bath or shower the boiler and any electrical switch or appliance control, utilising mains electricity should be situated so that it cannot be touched by a person using the bath or shower.
The location must permit adequate space for servicing and air circulation around the appliance as indicated in paragraph 2.4.
The location must permit the provision of an adequate flue and termination.
For unusual locations special procedures may be necessary.
BS 6798-1987 gives detailed guidance on this aspect.
A compartment used to enclose the appliance must be designed specifically for this purpose. No specific ventilation requirements are needed for the installation within a cupboard.
This appliance is not suitable for outdoor installation.

The type C appliances (in which the combustion circuit, air vent intake and combustion chamber are air-tight with respect to the room in which the appliance is installed) can be installed in any type of room.
There are no limitations with respect to ventilation and the volume of the room itself. The boiler must be installed on a solid, permanent wall to prevent access to the electrical parts (when live) through the aperture on the back frame.

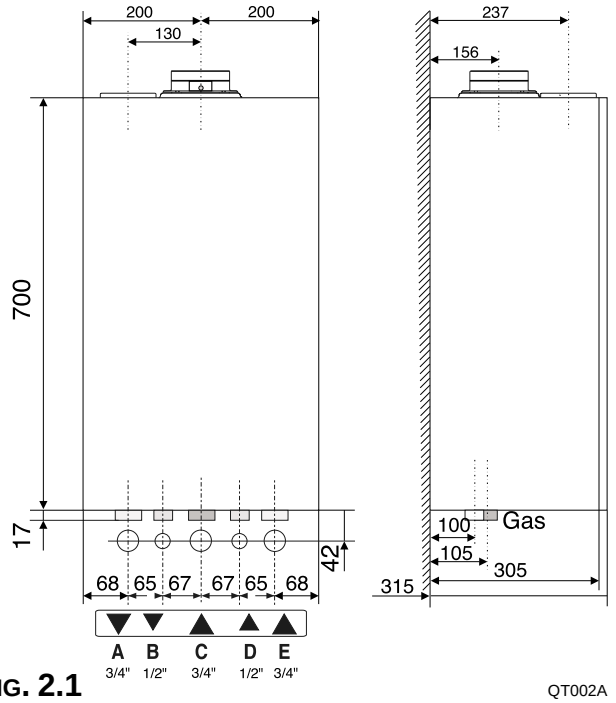

FIG. 2.1

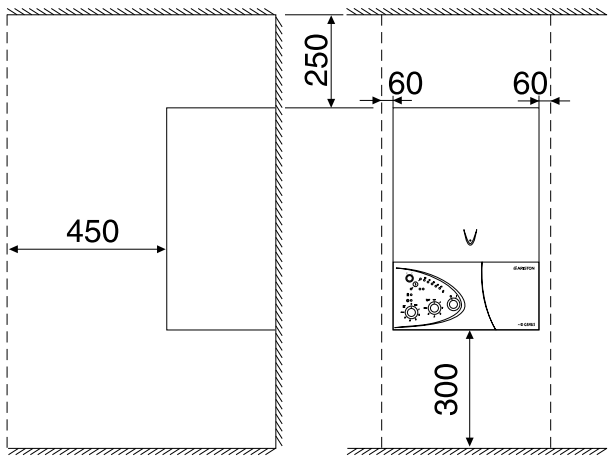

FIG. 2.2

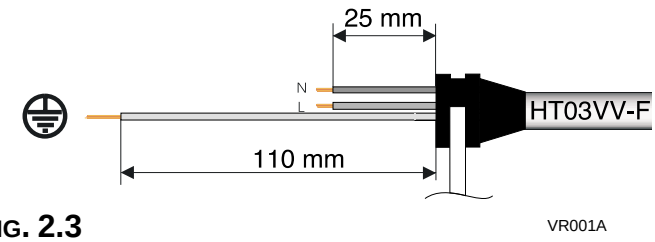

FIG. 2.3

2.3 OVERALL DIMENSIONS

LEGEND:

A = Central Heating Flow (3/4")
B = Domestic Hot Water Outlet (1/2")
C = Gas Inlet (3/4")
D = Domestic Cold Water Inlet (1/2")
E = Central Heating Return (3/4")

2.4 CLEARANCES

In order to allow for access to the interior of the boiler for maintenance purposes, the boiler must be installed in compliance with the minimum clearances indicated in **FIG. 2.2**

2.5 MOUNTING THE APPLIANCE

Fasten the boiler in place using the template and anchors supplied with the unit. It is highly recommended that a spirit level be used to position the boiler so that it is perfectly level.
For additional information, please consult the instructions contained in the connection kit and the flue kit.

2.7 ELECTRICAL CONNECTION

For safety purposes, have a competent person carefully check the electrical system in the property, as the manufacturer will not be held liable for damage caused by the failure to earth the appliance properly or by anomalies in the supply of power. Make sure that the residential electrical system is adequate for the maximum power absorbed by the unit, which is indicated on the rating plate. In addition, check that the section of cabling is appropriate for the power absorbed by the boiler.

The boiler operates with alternating current, as indicated in the technical information table section in 6, where the maximum absorbed power is also indicated. Make sure that the connections for the neutral and live wires correspond to the indications in the diagram. The appliance electrical connections are situated on the reverse of the control panel (see the servicing manual for further information)

IMPORTANT!
In the event that the power supply cord must be changed, replace it with one with the same specifications. Make the connections to the terminal board located within the control panel, as follows:
- The yellow-green wire should be connected to the terminal marked with the **" ⏚ "** symbol; make sure to re-use the ferrule mounted on the other supply cord;- The blue wire should be connected to the terminal marked **"N"**;
- The brown wire should be connected to the terminal

marked **"L"**.
Note: The diagrams for the electrical system are indicated in section 2.11.

Warning, this appliance must be earthed.
External wiring to the appliance must be carried out by a qualified technician and be in accordance with the current I.E.E. Regulations and applicable local regulations. The Genus range of boilers are supplied for connection to a 230 V~ 50 Hz supply.
The supply must be fused at 3 A.
The method of connection to the electricity supply must facilitate complete electrical isolation of the appliance, by the use of a fused double pole isolator having a contact separation of at least 3 mm in all poles or alternatively, by **means of a 3 A** fused three pin plug and unswitched shuttered socket outlet both complying with BS 1363.
The point of connection to the Electricity supply must be readily accessible and adjacent to the appliance unless the appliance is installed in a bathroom when this must be sited outside the bathroom.

2.8 Gas Connection

The local gas region contractor connects the gas meter to the service pipe.
If the gas supply for the boiler serves other appliances ensure that an adequate supply is available both to the boiler and the other appliances when they are in use at the same time.
Pipe work must be of an adequate size. Pipes of a smaller size than the boiler inlet connection should not be used.

2.9 Water Connections

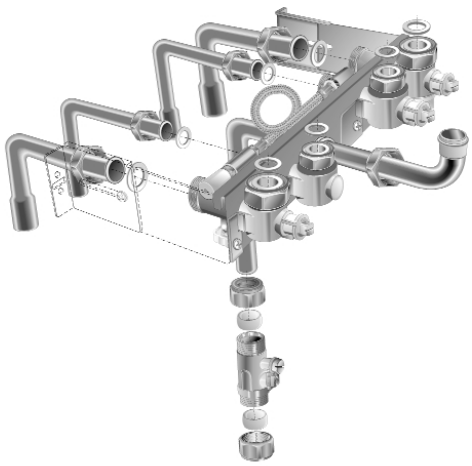

Fig. 2.5 KT002A

View of the Boiler Connections

Fig. 2.4 SC008A

Legend:

A = Central Heating Flow
B = Domestic Hot Water Outlet
C = Gas Inlet
D = Domestic Cold Water Inlet
E = Central Heating Return
F = Safety Valve

Central Heating
Detailed recommendations are given in BS 6798:1987 and BS 5449-1:1990, the following notes are given for general guidance.

PIPE WORK:
Copper tubing to BS EN 1057:1996 is recommended for water pipes. Jointing should be either with capillary soldered or compression fittings.
Where possible pipes should have a gradient to ensure air is carried naturally to air release points and water flows naturally to drain taps.
The appliance has a built-in automatic air release valve, however it should be ensured as far as possible that the appliance heat exchanger is not a natural collecting point for air.
Except where providing useful heat, pipes should be insulated to prevent heat loss and avoid freezing.
Particular attention should be paid to pipes passing through ventilated spaces in roofs and under floors.
BY-PASS:
The appliance includes an automatic by-pass valve, which protects the main heat exchanger in case of reduced or interrupted water circulation through the heating system, due to the closing of thermostatic valves or cock-type valves within the system.
SYSTEM DESIGN:
This boiler is suitable only for sealed systems.
Drain Cocks:
These must be located in accessible positions to permit the draining of the whole system. The taps must be at least 15mm nominal size and manufactured in accordance with BS 2870:1980.
SAFETY VALVE DISCHARGE:
The discharge should terminate facing downward on the exterior of the building in a position where discharging (possibly boiling water & steam) will not create danger or nuisance, but in an easily visible position, and not cause damage to electrical components and wiring.
The discharge must not be over an entrance or a window or any other type of public access.
AIR RELEASE POINTS:
These must be fitted at all high points where air naturally collects and must be sited to facilitate complete filling of the system.
The appliance has an integral sealed expansion vessel to accommodate the increase of water value when the system is heated.
It can accept up to 6 l (1.3 gal) of expansion water. If the heating circuit has an unusually high water content, calculate the total expansion and add an additional sealed expansion vessel with adequate capacity.
MAINS WATER FEED - CENTRAL HEATING:
There must be no direct connection to the mains water supply even through a non-return valve, without the approval of the Local Water Authority.
FILLING:
A temporary method for initially filling the system and replacing lost water during servicing in accordance with Water Supply Byelaw 14 must be provided.

DOMESTIC WATER
The domestic water must be in accordance with the relevant recommendation of BS 5546:1990. Copper tubing to BS EN 1057:1996 is recommended for water carrying pipe work and must be used for pipe work carrying drinking water.

RESIDUAL HEAD OF THE BOILER

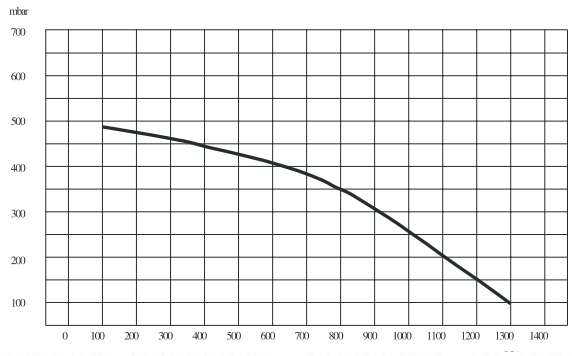

VR003A

2.9 Flue Connections

Flue System

The provision for satisfactory flue termination must be made as described in BS 5440-1.

The appliance must be installed so that the flue terminal is exposed to outdoor air.

The terminal must not discharge into another room or space such as an outhouse or lean-to.

It is important that the position of the terminal allows a free passage of air across it at all times.

The terminal should be located with due regard for the damage or discolouration that might occur on buildings in the vicinity.

In cold or humid weather water vapour may condense on leaving the flue terminal.

The effect of such “steaming” must be considered.

If the terminal is less than 2 metres above a balcony, above ground or above a flat roof to which people have access, then a suitable terminal guard must be fitted. When ordering a terminal guard, quote the appliance model number.

A suitable terminal guard is available from:

TOWER FLUE COMPONENTS
Morley Road
Tonbridge
Kent TN9 1RA

The minimum acceptable spacing from the terminal to obstructions and ventilation openings are specified in **Fig. 2.6**.

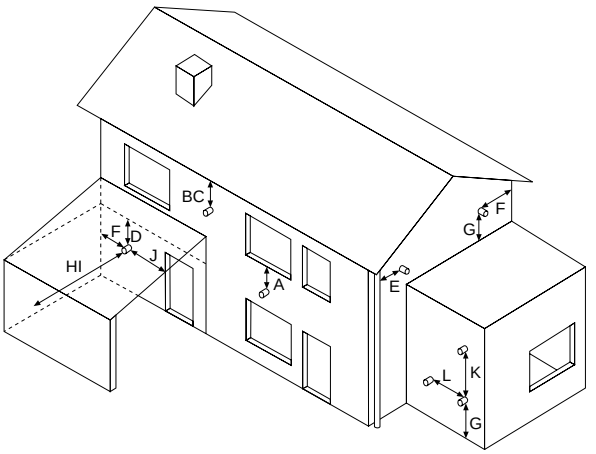

Fig. 2.6

Terminal Postion	mm
A - Directly below an open window or other opening	300
B - Below gutters, solid pipes or drain pipes	75
C - Below eaves	200
D - Below balconies or car-port roof	200
E - From vertical drain pipes and soil pipes	75
F - From internal or external corners	300
G - Above ground or below balcony level	300
H - From a surface facing a terminal	600
I - From a terminal facing a terminal	1200
J - From an opening in the car port (e.g. door, window) into dwelling	1200
K - Vertically from a terminal in the same wall	1500
L - Horizontally from a terminal in the same wall	300

The boiler is designed to be connected to a coaxial flue discharge system.

Ø 60/100 mm

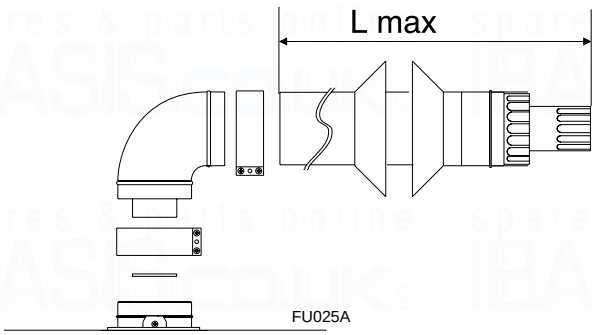

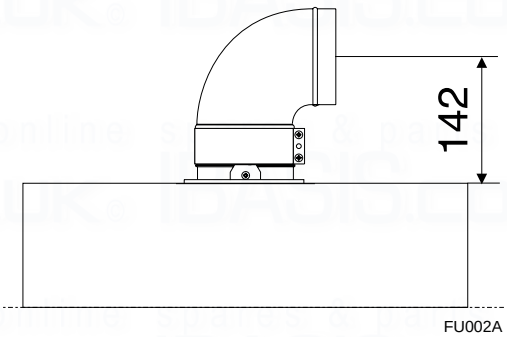

Fig. 2.7

In addition, it is also possible to use a split (twin pipe) system by fitting a special adaptor to the flue connector and using the aperture for the air vent intake located on the top part of the combustion chamber.
To utilise the air intake it is necessary to:
1. Remove the bottom of the air intake by cutting it with a suitable knife (see **Fig. 2.8**);
2. Insert the elbow into the air intake until it reaches the lower end. (There is no need to use gaskets or sealing componds).

The components marked * in **Fig 2.9** are present or absent depending on the type of flue system used by the installer.

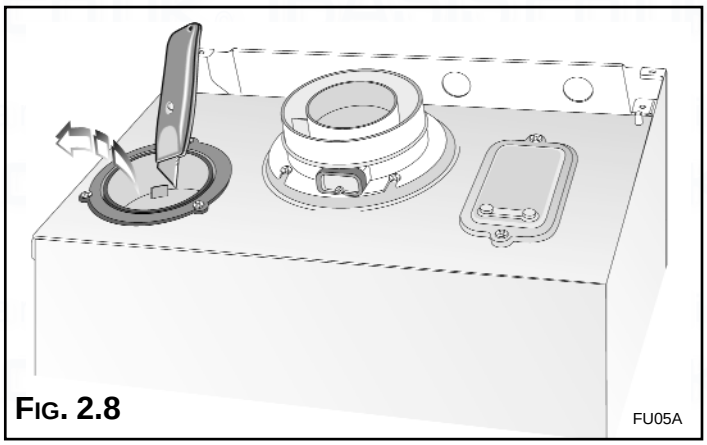

Fig. 2.8

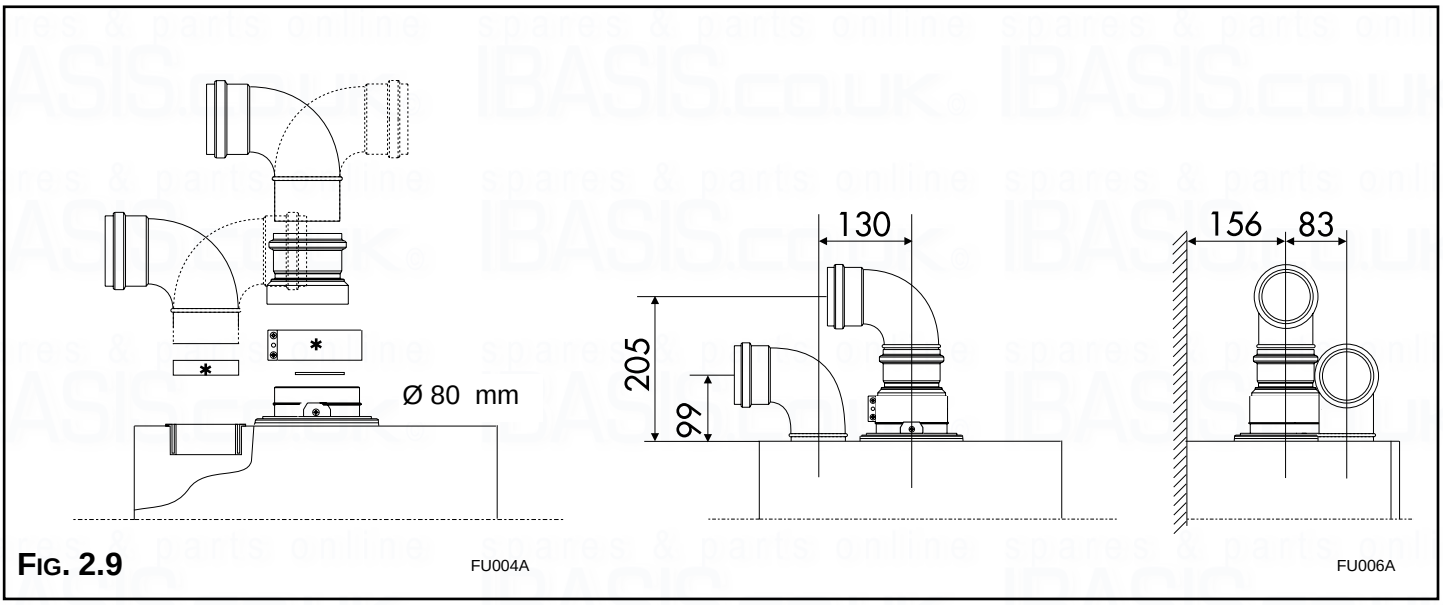

Fig. 2.9

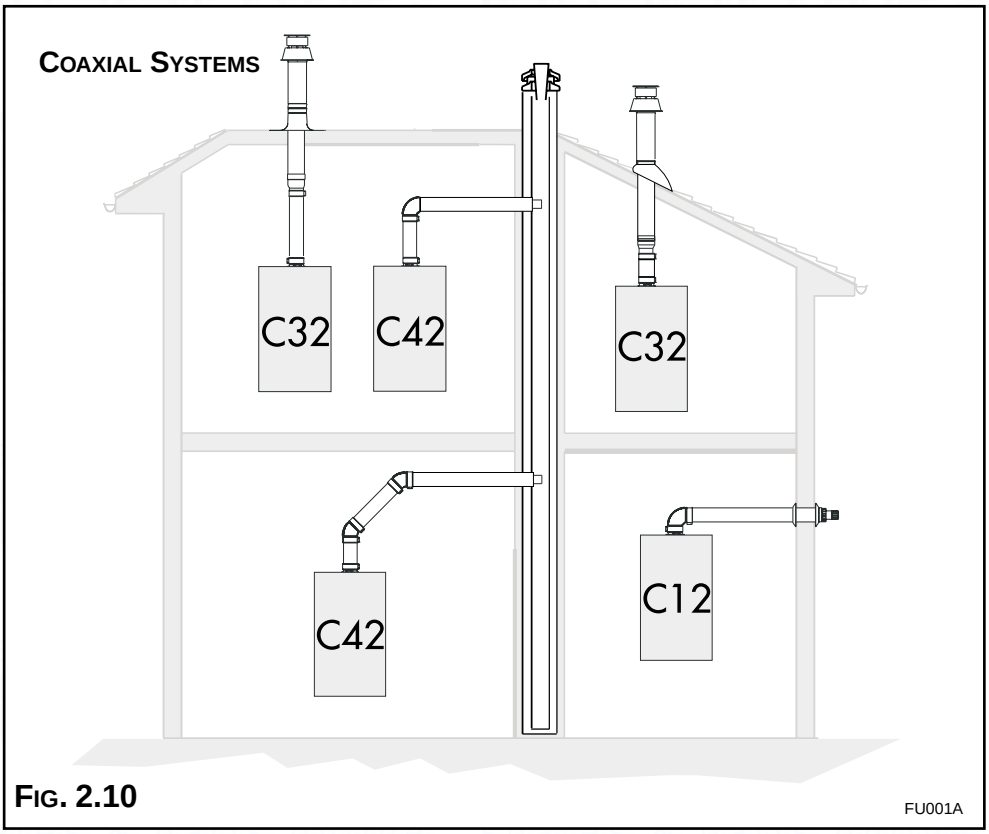

Fig. 2.10

Important!

For all flue systems, a restrictor must always be inserted into the boiler's flue connector; the restrictor must be ø 43 or ø 41 in diameter depending on the length of piping indicated in Table 2.1.

The diagrams illustrate some of the various designs for coaxial or twin pipe flue systems.
For further information on discharge/ventilation accessories, see the **Flue Pipe Accessories Manual**.

micro GENUS 23 MFFI

TABLE 2.1

	Exhaust Type	Restrictor ø 43 mm	NO Restrictor	Maximum Extension Exhaust/Air	Risk of Condensation Forming Piping not insulated ø 43 restrictor	Piping not insulated NO	Piping insulated ø 43 restrictor	Piping insulated NO
Coaxial Systems ø 60/100	C12 (xx) C32 (xx) C42 (xx)	L min = 0.5 m L max = 2 m	L min = 2 m L max = 4 m	L = 4 m	NONE	NONE	NONE	NONE
	Exhaust Type	**Restrictor** ø 43 mm	**NO Restrictor**	**Maximum Extension Exhaust/Air**	**Risk of Condensation Forming Piping not insulated** ø 43 restrictor	**Piping not insulated NO**	**Piping insulated** ø 43 restrictor	**Piping insulated NO**
Twin Pipe Systems ø 80/80	C12 (xy) C32 (xy) C42 (xy)	L max = 11.5 m	L min = 11.5 m L max = 43 m	43 m 43 m 43 m	4.3 m	6.9 m	NONE	NONE
	C52 (xy) C82 (xy)	L max = 11,4 m	L min = 11,4 m L max = 40m	40 m	4.3 m	6.9 m	5,7 m	21,7 m

micro GENUS 27 MFFI

	Exhaust Type	Restrictor ø 41 mm	NO Restrictor	Maximum Extension Exhaust/Air	Risk of Condensation Forming Piping not insulated ø 41 restrictor	Piping not insulated NO restrictor	Piping insulated ø 41 restrictor	Piping insulated NO restrictor
Coaxial Systems ø 60/100	C12 (xx) C32 (xx) C42 (xx)	L min = 0.5 m L max = 1 m	L min = 1 m L max = 4 m	L = 4 m	NONE	NONE	NONE	NONE
	Exhaust Type	**Restrictor** ø 41 mm	**NO Restrictor**	**Maximum Extension Exhaust/Air**	**Risk of Condensation Forming Piping not insulated** ø 41 restrictor	**Piping not insulated NO restrictor**	**Piping insulated** ø 41 restrictor	**Piping insulated NO restrictor**
Twin Pipe Systems ø 80/80	C12 (xy) C32 (xy) C42 (xy)	L max = 38 m	L min = 38 m L max = 62 m	62 m 62 m 62 m	8 m	11 m	19 m	31 m
	C52 (xy) C82 (xy)	L max = 34 m	L min = 34 m L max = 54 m	54 m	8 m	11 m	19 m	31 m

L = Sum of the total length of exhaust + air intake piping.

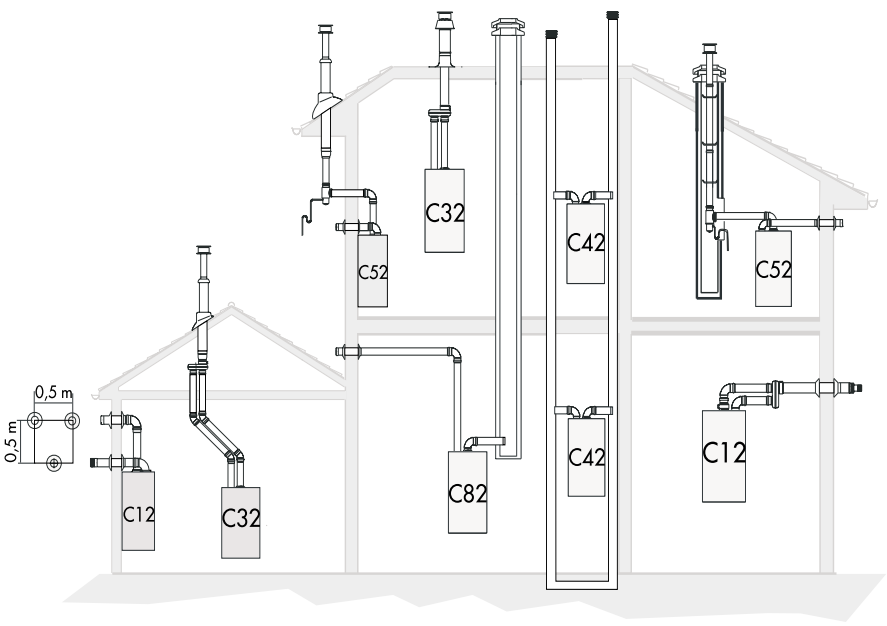

FIG. 2.11

In calculating the lengths of the pipes, the maximum length "L" must also take into consideration the values for the exhaust/air intake end terminals, as well as 90° elbows for coaxial systems.

The C52 types must comply with the following requirements:

1 - The exhaust/ air intake pipes must have the same diameter of ø 80 mm.

2 - If elbows are to be inserted into the air intake and/or exhaust system, the calculation of the overall length must take into consideration the values for each elbow, see the **FLUE PIPE ACCESSORIES MANUAL**.

3 - The exhaust pipe must protrude by at least 0.5 m above the top of the roof in the event that it is located on the opposite side to the side with the air intake (this condition is not obligatory when the air intake and exhaust are located on the same side of the building).

2.10 ROOM THERMOSTAT CONNECTION

To connect a room thermostat, it is necessary to:

1. - Open the control panel as indicated in section 3.3.
2.- Remove the link **"A"** from the terminal block on the reverse of the control panel.
3. - Insert the thermostat cable through the cable grommet and fasten it by means of the cable-clamp provided.
4. - Then connect the thermostat wires to the terminal block.
5.- If a remote time clock is to be fitted, disconnect the integral time clock from the P.C.B.
6. - Using a volt-free switching time clock, connect the switching wires from the time clock following points 1-4 above.
7. - If using an external time clock and room thermostat, these must be connected in series as points 1-7 above.

Note: Only a two-wire type room thermostat can be used.

An anti-frost device is built-in to the appliance's electronic regulation system.

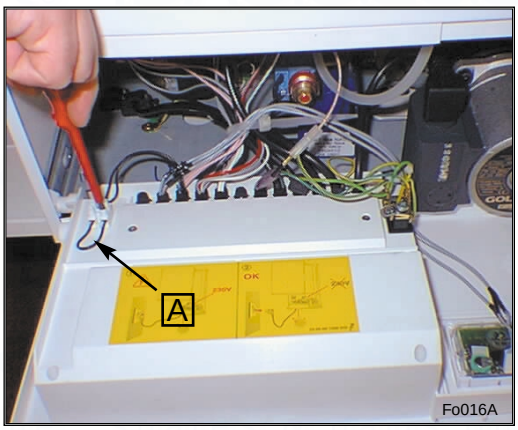

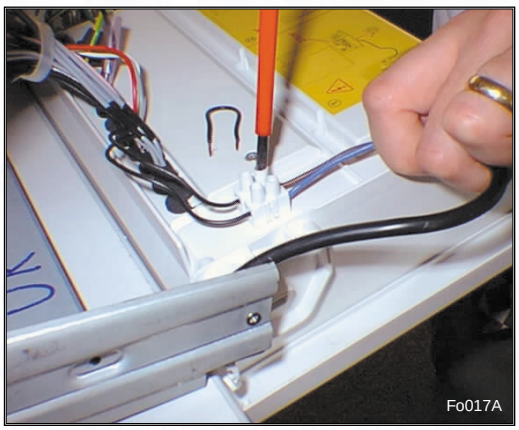

2.12 Electrical Diagram

Legend:

A = Time Clock Connector
B = Central Heating Selection (Winter) and Temperature Adjustment
C = Connector for Total Check System
D = Domestic Hot Water Temperature Adjustment
E = Soft-light Adjustment
F = Maximum Heating Adjustment
G = On/Off Switch
H = On/Off L.E.D.
I = Fume Sensor L.E.D.
J = Ignition Failure (Lockout) L.E.D.
K = Low System Water Level/Lack of Circulation L.E.D.
L = Reset Button
M = Economy/Comfort Selector
N = Overheat L.E.D.
O = Temperature L.E.D.s
P = Transformer
Q = Circulation Pump Relay
R = Fan Relay
S = Gas Valve Relay
T = Motorised Diverter Valve Relay
V = Spark Generator
U = Anti-cycling Device Adjustment for Heating

A01 = Circulation Pump
A02 = Fan
A03 = Spark Generator/Gas Valve Supply
A04 = Motorised Diverter Valve
A05 = Flame Detection Circuit
A06 = Detection Electrode
A07 = Main Circuit Temperature Probe
A08 = Domestic Hot Water Temperature Probe
A09 = Domestic Hot Water Flow Switch
A10 = Main Circuit Flow Switch
A11 = Modulator
A12 = Air Pressure Switch
A13 = Safety Thermostat
A14 = External (Room) Thermostat

Colours:

Gry = Grey
Wh = White
Pnk = Pink
Brn = Brown
Bl = Blue
Blk = Black
Rd/Blk = Red/Black

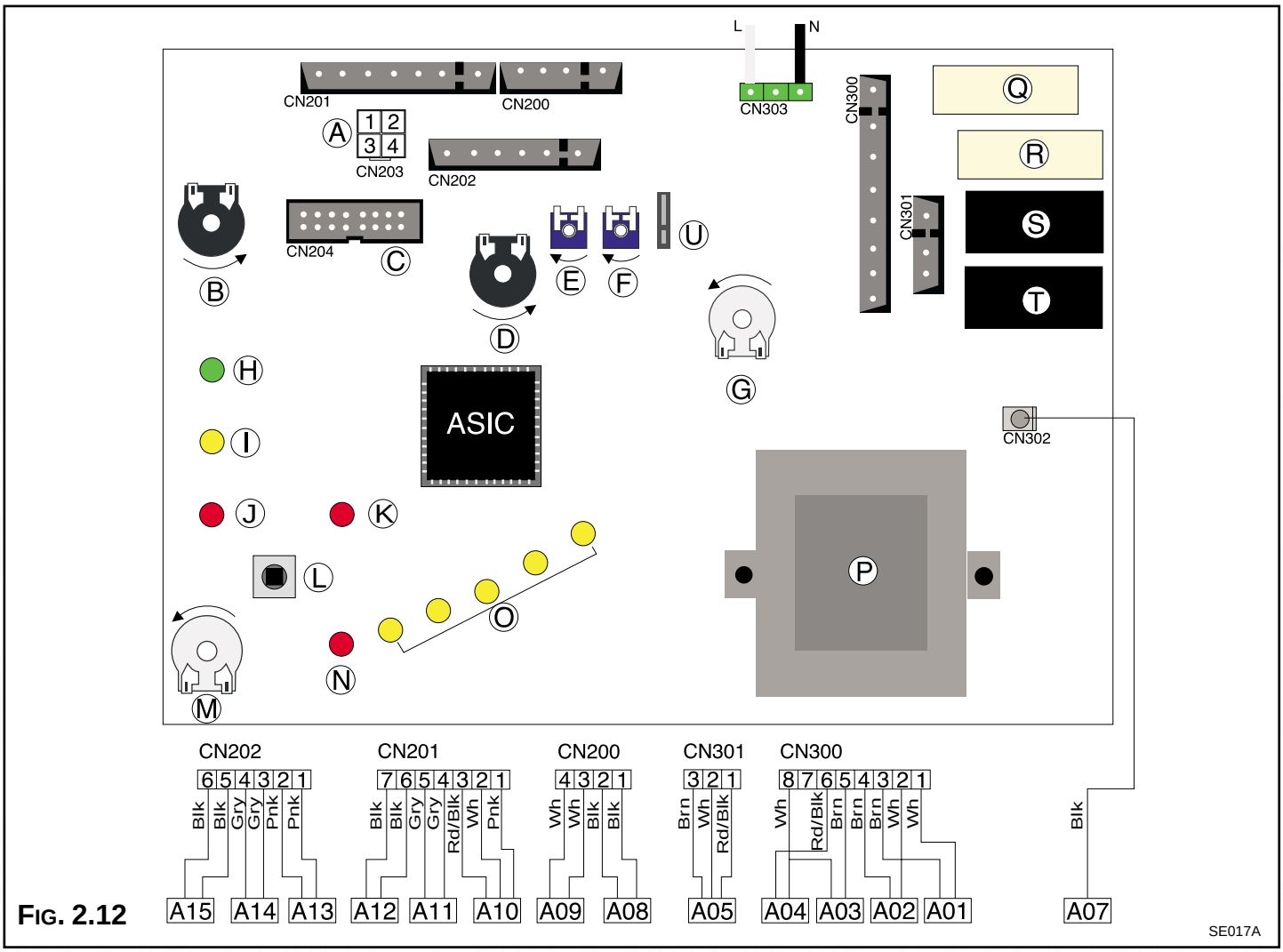

Fig. 2.12

FIG. 2.13

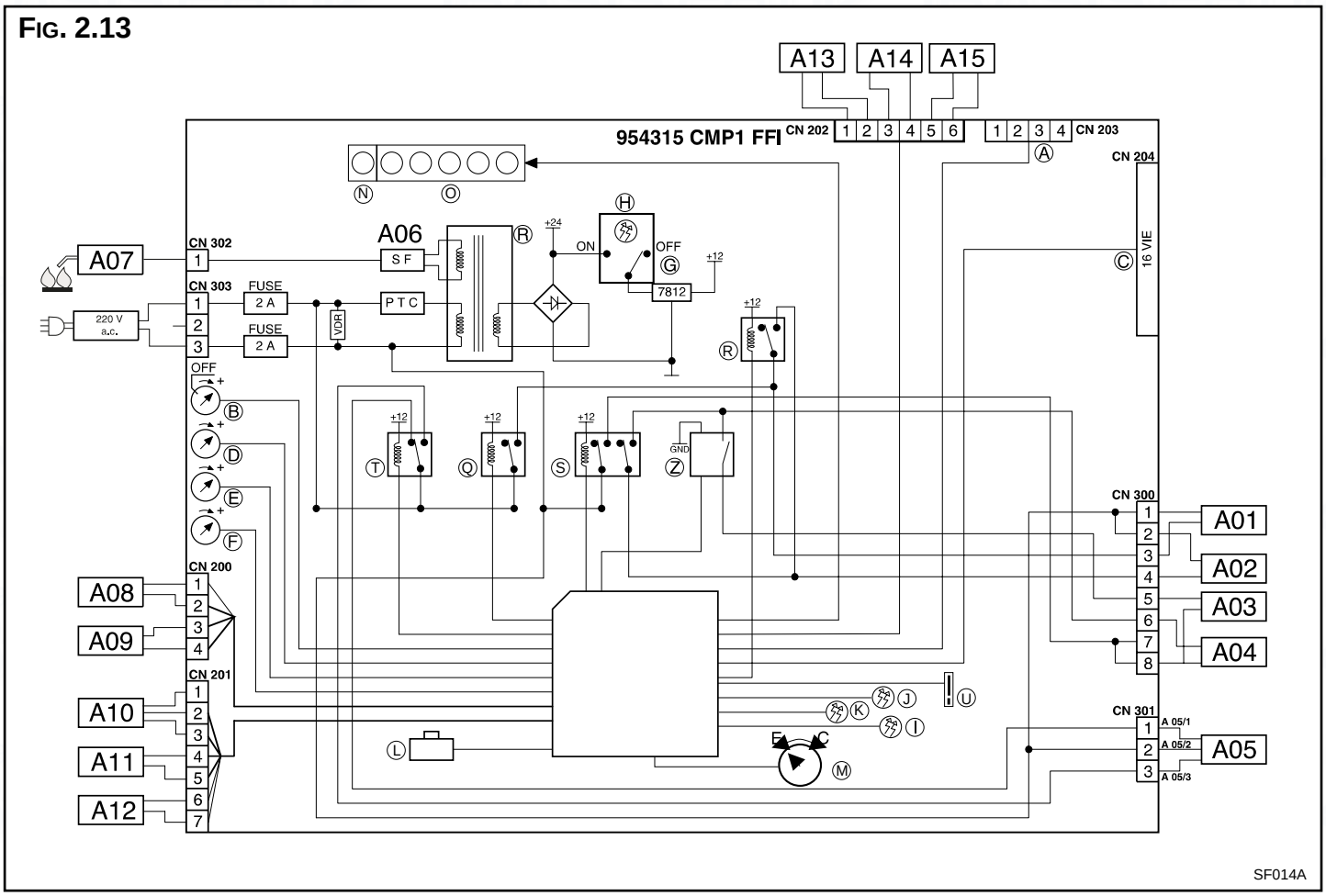

2.13 WATER CIRCUIT DIAGRAM

FIG. 2.14

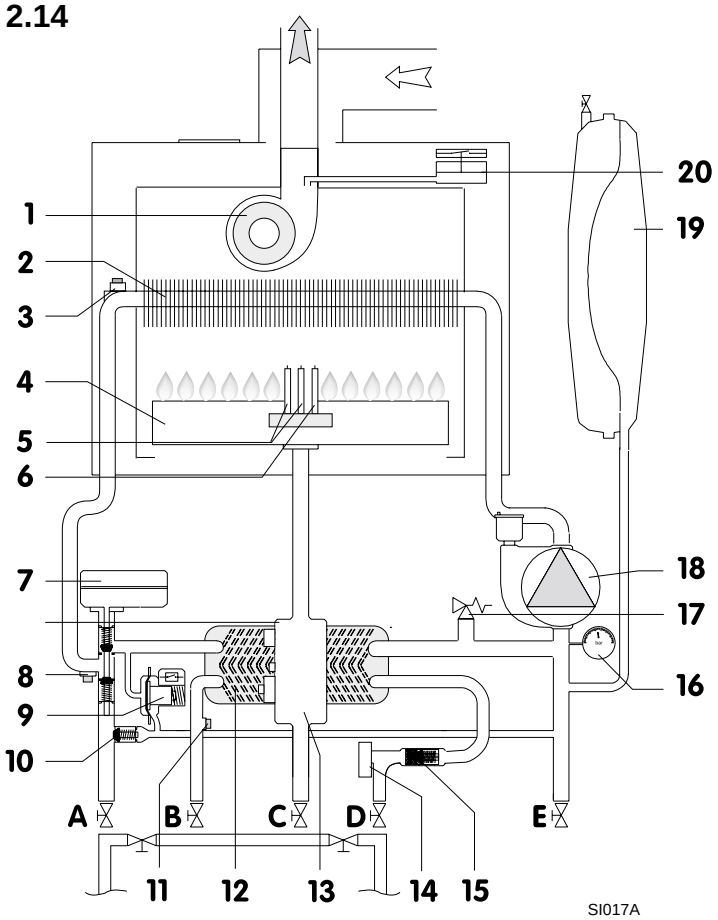

LEGEND:

1. Fan
2. Main Heat Exchanger
3. Overheat Thermostat
4. Burner
5. Ignition Electrodes
6. Detection Electrode
7. Motorised Valve
8. Main Circuit Temperature Probe
9. Main Circuit Flow Switch
10. Automatic By-pass
11. Domestic Hot Water Temperature Probe
12. Secondary Heat Exchanger
13. Gas Valve
14. Domestic Hot Water Flow Switch
15. Domestic Water Inlet Filter
16. Pressure Gauge
17. Safety Valve
18. Circulation Pump with Automatic Air Release Valve
19. Expansion Vessel
20. Air Pressure Switch

A. Central Heating Flow
B. Domestic Hot Water Outlet
C. Inlet Gas
D. Domestic Cold Water Inlet
E. Central Heating Return

3. COMMISSIONING

3.1 INITIAL PREPARATION

MTS (GB) Limited support the benchmark initiative. Within the information pack you will find a copy of the benchmark logbook. It is important that this is completed in the presence of your customer, they are shown how to us it, and it is signed by them. Please instruct your customer that they must have their benchmark logbook with them whenever they contact a service engineer or us.

Preliminary electrical system checks to ensure electrical safety must be carried out by a competent person i.e. polarity, earth continuity, resistance to earth and short circuit.

FILLING THE HEATING SYSTEM:

Remove the panels of the case and lower the control panel (see section 3.3 for further information).
Open the central heating flow and return cocks supplied with the connection kit.
Unscrew the cap on the automatic air release valve one full turn and leave open permanently.
Close all air release valves on the central heating system.
Gradually open valve(s) at the filling point (filling-loop) connection to the central heating system until water is heard to flow, do not open fully.
Open each air release tap starting with the lower point and close it only when clear water, free of air, is visible.
Purge the air from the pump by unscrewing anticlockwise the pump plug and also manually rotate the pump shaft in the direction indicated by the pump label to ensure the pump is free.
Close the pump plug.
Continue filling the system until at least 1 bar registers on the pressure gauge.
Inspect the system for water soundness and remedy any leaks discovered.

FILLING OF THE D.H.W. SYSTEM:

Close all hot water draw-off taps.
Open the cold water inlet cock supplied with the connection kit.
Open slowly each draw-off tap and close it only when clear water, free of bubbles, is visible

GAS SUPPLY:

Inspect the entire installation including the gas meter, test for soundness and purge, all as described in BS 6891:1988.
Open the gas cock (supplied with the connection kit) to the appliance and check the gas connector on the appliance for leaks.

When the installation and filling are completed turn on the central heating system (section 3.4) and run it until the temperature has reached the boiler operating temperature. The system must then be immediately flushed through.
The flushing procedure must be in line with BS 7593:1992 code of practice for treatment of water in domestic hot water central heating systems.
During this operation, we highly recommend the use of a central heating flushing detergent (Fernox Superfloc or equivalent), whose function is to dissolve any foreign matter that may be in the system.
Substances different from these could create serious problems to the pump or other components.
The use of an inhibitor in the system such as Fernox MB-1 or equivalent is strongly recommended to prevent corrosion (*sludge*) damaging the boiler and system.
Failure to carry out this procedure may invalidate the appliance warranty.

3.2 Control Panel

Legend:

A - On/Off knob
B - Domestic hot water temperature adjustment knob
C - Central heating selection (winter) and temperature adjustment knob
D - On/Off L.E.D. (green)
E - Fume sensor L.E.D. (yellow)
F - Ignition failure (lockout) L.E.D. (red)
G - “Economy/Comfort” mode selection knob
H - Ignition failure (lockout) and/or overheat reset button
I - Overheat L.E.D. (red)
J - Low system water level L.E.D. (red)
K - Central heating temperature L.E.D (yellow)
L - Time clock
M - Heating system pressure gauge

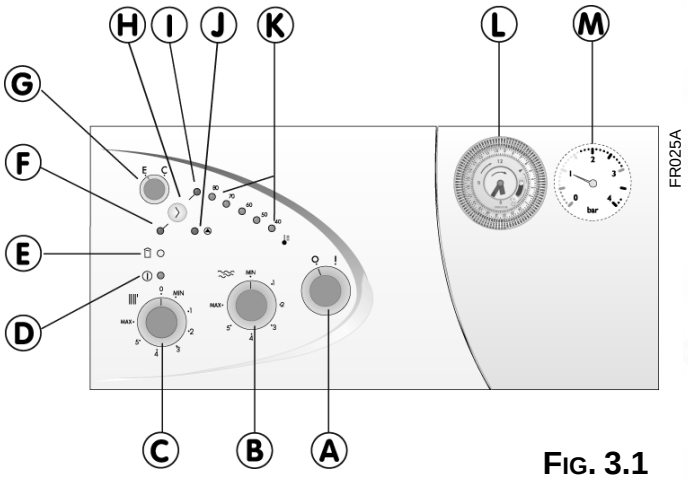

Fig. 3.1

3.3 Removing the Front Panel

In order to access the inside of the boiler, it is necessary to unscrew the fastening screws **“A”** of the control panel located on the lower part of the panel itself.
The control panel moves downward and when pulled forward rotates on two lateral hinges.
The panel stays in a semi-horizontal position, which allows access to the inner parts of the boiler.
In order to increase the maneuvering space, it is possible to raise the control panel and rotate it to a fully horizontal position.

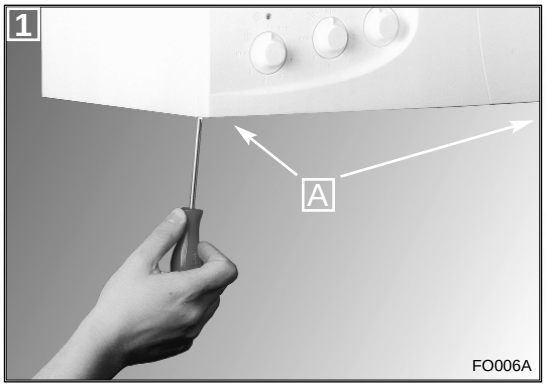

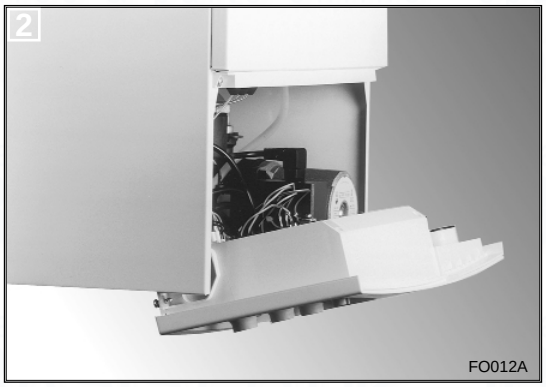

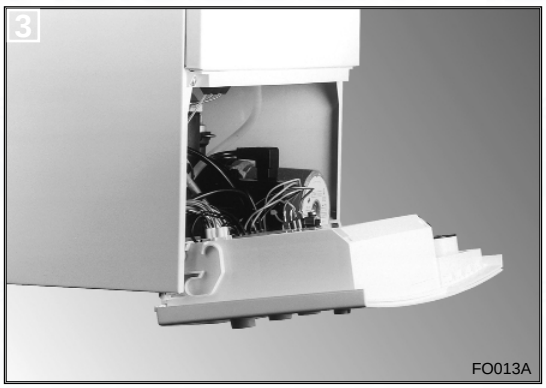

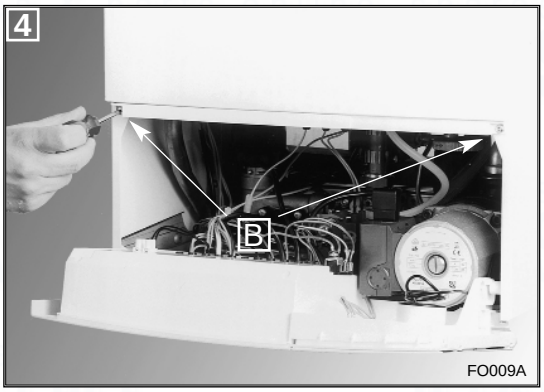

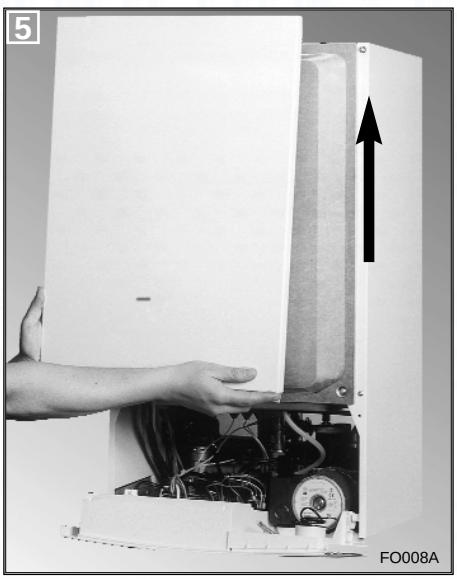

To dismantle the front casing panel it is necessary to:
1 - Remove the two screws **“B”**;
2 - Lift the front casing panel up and forward.

3.4. Initial Start-up

The checks to be run before initial start-up are as follows:

1. Make sure that:
   - the screw on the automatic air valve has been loosened when the system is full;
   - If the water pressure in the system is below 1 bar, bring it up to the appropriate level;
   - Check to see whether the gas cock is closed;
   - Make sure that the electrical connection has been made properly and that the earth wire is connected to an efficient earthing system;
   - Supply power to the boiler by turning the On/Off switch **"A"** (see **Fig.3.1**) - the L.E.D. **"D"** will illuminate - turn the selector knob **"C"** to the winter /central heating position. This will start the circulation pump. After 7 seconds, the boiler will signal a shutdown due to ignition failure. Leave the boiler as it is until all of the air has been bled from the lines.
   - Loosen the cap on the head of the pump to eliminate any air pockets;
   - Repeat the procedure for bleeding the radiators of air;
   - Open the taps for a brief period;
   - Check the system pressure and, if it has dropped, open the filling loop again to bring the pressure back up to 1 bar.
2. Check the exhaust flue for the fumes produced by combustion.
3. Make sure that all gate valves are open;
4. Turn on the gas cock and check the seals on the connections, including the one for the burner, making sure that the meter does not signal the passage of gas. Check the connections with a soap solution and eliminate any leaks.
5. Press the reset button **"A"** for the lighting system; the spark will light the main burner. If the burner does not light the first time, repeat the procedure.
6. Check the minimum and maximum pressure values for the gas going to the burner; adjust it if needed using the values indicated in the table in section 4 (See the relative section for burner pressure adjustment within the servicing manual).

3.5 Operational Adjustments

(See section 3.2 for references) it is possible to:

- Set the temperature of the heating system by adjusting the knob **"C"**
- Set the temperature of the domestic hot water by turning knob **"B"**
- The selector knob **"G"** allows the user to choose the economy mode (position "E") or the comfort mode (position "C").
  The economy mode is the normal state for the operation of the boiler, since the domestic water is heated up only when a tap is turned on.
  The comfort mode is a special operating state, because the water contained in the secondary exchanger and in the primary exchanger is kept in a preheated condition, thereby allowing a quicker delivery of domestic water when required. The latter is therefore the more convenient choice.

To access the areas in which adjustments are made, it is necessary to open the control panel, as indicated in section 3.3, then remove the rear inspection cover by unscrewing the two screws. Access is thereby provided to the P.C.B. and to the following components:

1. the power supply cable connector;
2. the fuses;
3. the soft-light potentiometer the setting for which can range from the minimum thermal power to the maximum;
4. the maximum thermal heating power potentiometer adjustable by the minimum to maximum power (already calibrated in the factory to 70% of the maximum thermal power);
5. the potentiometer for adjusting the ignition delay (anti-cycling) feature, which can be set from 0 to 2 minutes (set in the factory at one minute);
6. the time clock connector.

3.6 Combustion Analysis

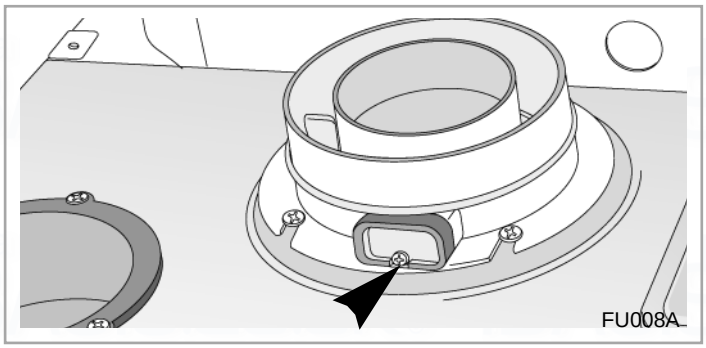

The flue connector has two apertures, readings can be taken for the temperature of the combustion by-products and of the combustion air, as well as of the concentrations of O_2 and CO_2, etc. .

To access these intakes it is necessary to unscrew the front screw and remove the metal plate with sealing gasket.
The best test conditions, with the maximum heating power, are achieved by turning the selector knob "**C**" to the "max" position and removing the electrical connection to the heating sensor (see section 6.).

3.7 Fume Discharge Monitoring

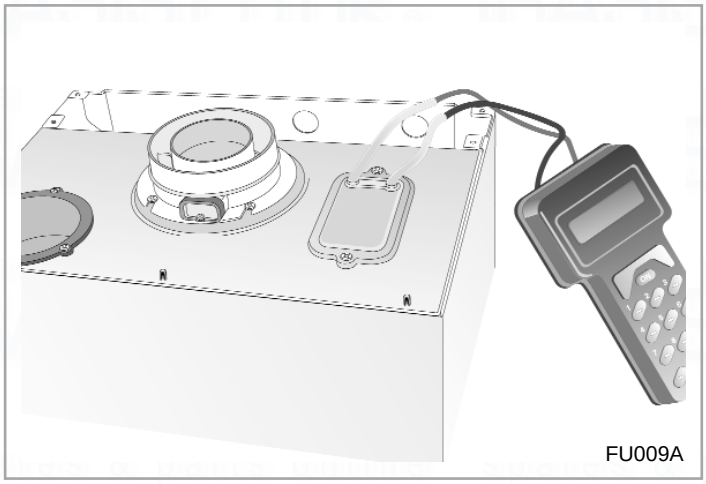

In the boiler, it is possible to monitor the correct operation of the flue exhaust/air intake, checking for a loss of general pressure in the system. Through the use of a differential manometer connected to the test points of the combustion chamber, it is possible to detect the ΔP of operation of the air pressure switch.
The value detected should not be less than 0,55 mbar for 23kW and 0.75 mbar for 27kW under conditions of maximum thermal power in order for the boiler to function properly and without interruption.

3.8 Boiler Safety Systems

The boiler is fitted with the following devices (see section 3.2 for references).

1 - *Ignition Failure:*
This control signals an ignition failure on the burner 7 seconds after a lighting failure. The L.E.D. **"F"** will illuminate to signal the shutdown status.
The system can be reset by pressing and releasing the button **"H"** after checking to make sure that the gas cock is open.

2 - *Circulation Failure:*
This control signals that the safety pressure switch on the primary circuit has not sensed a pressure of at least 1 bar within 40 seconds of the activation of the circulation pump; the circulation pump comes to a halt and the red L.E.D. **"J"** illuminates.
The system may be reset, after re-establishing the correct level of pressure in the boiler, turning the **"A"** knob.

3 - *Overheating:*
This control shuts off the boiler in the case where the primary circuit reaches a temperature in excess of 105°C.
The red L.E.D.s **"I"** and **"F"** will illuminate to signal this shutdown status.
The system can be reset by waiting a few minutes for the primary exchanger to cool down and then by pressing and releasing the "**H**" button.

4. *Limescale Build-up:*
The boiler is equipped with a device that limits the formation of Limescale in the secondary exchanger by controlling the temperature of the domestic hot water (max 61°C) and also controlling the temperature of the water in the primary heating circuit.

5. *ANTI-FROST DEVICE:*
The boiler is equipped with a device that, in the event of the water temperature going below 5°C, the 3-way diverter valve switches to domestic hot water and the burner ignites at the minimum power until the boiler water reaches a temperature of about 50°C.
This device operates only if the boiler is functioning perfectly and:
- the system pressure is sufficient;
- the boiler is powered electrically;
- the gas is distributed.

6 - EXHAUST DISCHARGE ANOMALY SHUTDOWN:
The boiler is fitted with safety devices, which in the event of defective discharge of exhaust fumes, automatically interrupts the gas supply, thereby shutting off the boiler.
The shutdown of the boiler is temporary and is indicated by the illumination of the yellow L.E.D. **"E"** for a period of about 15 minutes.
Once this time period has passed and the discharge state of exhaust fumes has returned to normal, the boiler automatically turns back on.

7 - SAFETY SHUTDOWN:
At the start of every lighting phase, the P.C.B. performs a series of internal controls. If a malfunction occurs, the boiler will shutdown until the problem has been resolved.

3.9 DRAINING THE SYSTEM

DRAINING THE HEATING SYSTEM

The heating system must be emptied as follows:
- Turn off the boiler;
- Open the drain valve for the system and place a container below to catch the water that comes out;
- Empty the system at the lowest points (where present). If you plan on not using the heating system for an extended period of time, it is recommended that you add antifreeze with an ethylene glycol base to the water in the heating lines and radiators if the ambient temperature drops below 0°C during the winter.
  This makes repeated draining of the entire system unnecessary.

DRAINING THE DOMESTIC HOT WATER SYSTEM

Whenever there is the danger of the temperature dropping below the freezing point, the domestic hot water system must be drained as follows:
- Turn off the general water valve for the household plumbing system;
- Turn on all the hot and cold water taps;
- Empty the remaining water from the lowest points in the system (where present).

4. GAS ADJUSTMENTS

CATEGORY II2H3+		Methane Gas G20	Liquid Butane Gas G30	Liquid Propane Gas G31
Lower Wobbe Index (15°C;1013mbar)	MJ/m^3h	45.67	80.58	80.58
Nominal Delivery Pressure	mbar	20	29	37
Minimum Delivery Pressure	mbar	17	20	25
23 MFFI				
Main Burner: n. 13 jets (ø)	mm	1.30	0.77	0.77
Consumption (15°C; 1013mbar)	mc/h	2.72	----	----
Consumption (15°C; 1013mbar)	Kg/h	----	2.02	2.02
Gas Cock Outlet Pressure max - min	mbar	11.0 - 2.0	(*) - 6.0	(*) - 6.0
27 MFFI				
Main Burner: n. 15 jets (ø)		1.30	0.77	0.77
Consumption (15°C; 1013mbar)	mc/h	3.15	----	----
Consumption (15°C; 1013mbar)	Kg/h	----	2.34	2.31
Gas Cock Outlet Pressure: max - min	mbar	11.0 - 1.6	(*) - 4.6	(*) - 6.0

[1 mbar = 10,197 mmc.a.]

The outlet pressure of the gas cock is obtained by completely loosening the screw on the solenoid. The maximum pressure of the gas to the burner will be equal to the nominal delivery pressure minus the head loss within the gas valve.

4.1 CHANGING THE TYPE OF GAS

The boiler can be converted to use either methane (natural) gas (G20) or LPG (G30 - G31) by an Authorised Service Centre.

The operations that must be performed are the following:

1. Replace the jets on the main burner (see table in section 4);
2. Adjust the maximum and minimum thermal capacity values for the boiler (see table in section 4);
3. Replace the gas rating plate;
4. Adjust the maximum thermal power setting;
5. Adjust the soft-light feature;
6. Adjust the ignition delay feature for the heating system (can be set from 0 to 2 mins.).

CATEGORY II2H3+	Methane Gas G20	Liquid Butane Gas G30	Liquid Propane Gas G31
Recommended Soft-light Pressure (mbar)	8.0	16.0	16.0

5. MAINTENANCE

It is recommended that the following inspections be carried out on the boiler at least once a year:

1 - Check the seals for the water connections; replacement of any faulty seals.
2 - Check the gas seals; replacement of any faulty gas seals.
3 - Visual check of the entire unit.
4 - Visual check of the combustion process or analysis of combustion by-products (see section 3.6) and cleaning of the burner if needed.
5 - If called for by point. 3, dismantling and cleaning of the combustion chamber.
6 - If called for by point. 4, dismantling and cleaning of the burner jets.
7 - Visual check of the primary heat exchanger:
    - check for overheating in the blade assembly;
    - clean the exhaust fan if needed.
8 - Adjustment of the flow rate of the gas: flow rate for lighting, partial load and full load.
9 - Check of the heating safety systems:
    - safety device for maximum temperature;
    - safety device for maximum pressure.
10- Check of the gas safety systems:
    - safety device for lack of gas or flame ionisation (detection electrode);
    - safety device for gas cock.
11- Check of the electrical connection (make sure it complies with the instructions in the manual).
12- Check of domestic hot water production efficiency (flow rate and temperature)
13- General check of the combustion by-products of the discharge/ventilation system.
14- Check of the general performance of the unit.

7. MISCELLANEOUS

7.1 WIRING DIAGRAM FOR TWO HEATING ZONES

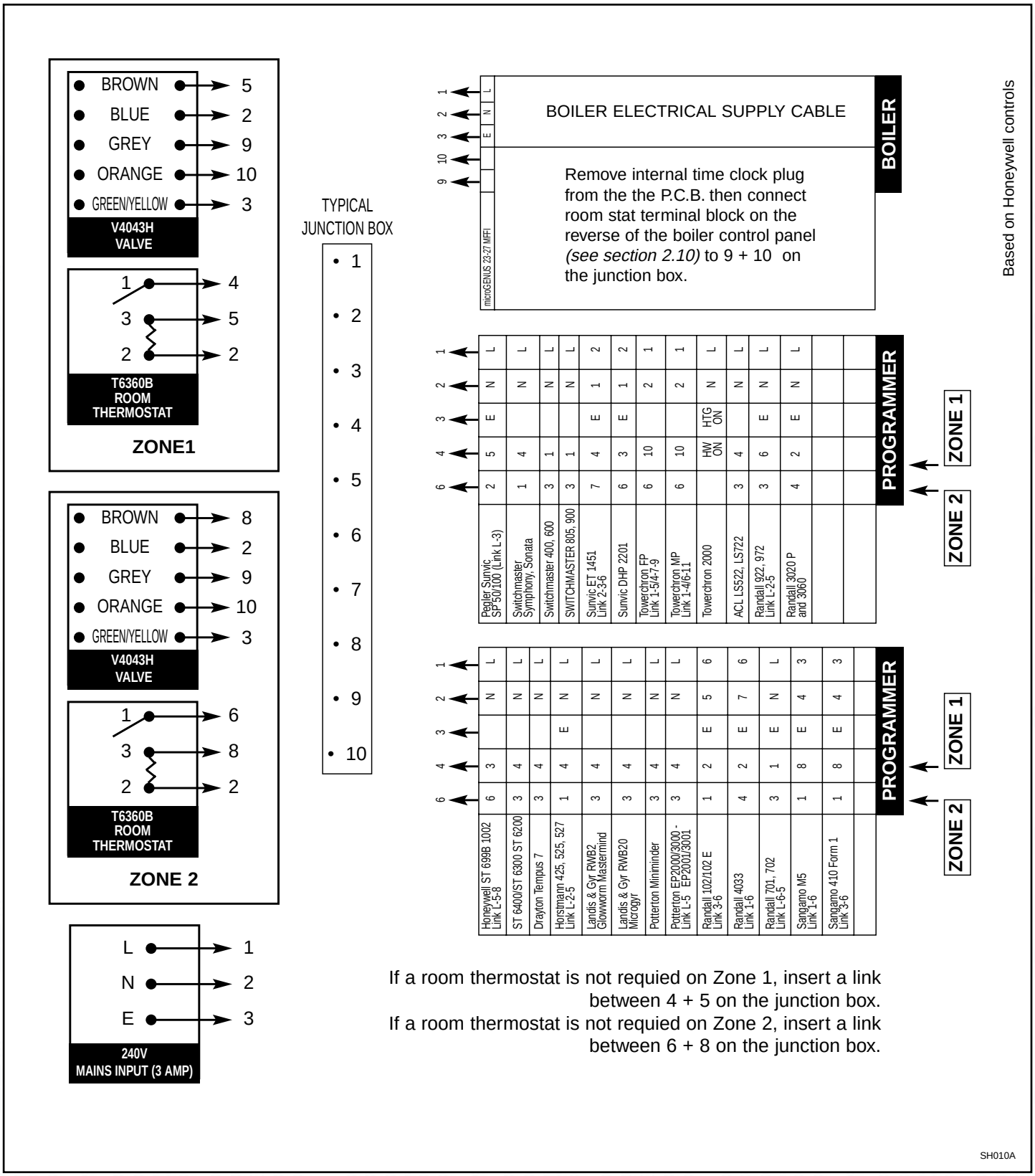

7.2 Wiring Diagram for Connection to an Ariston Unvented Cylinder

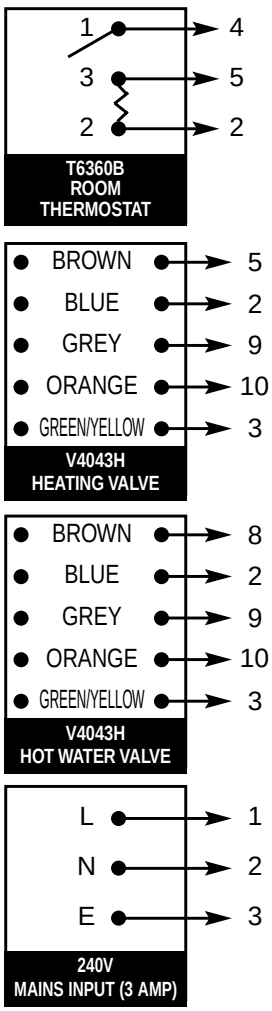

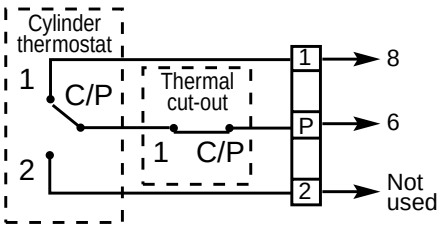

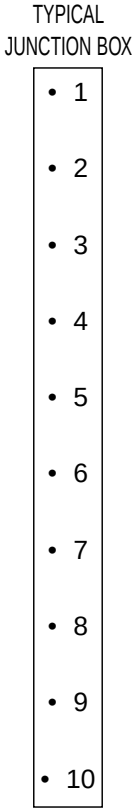

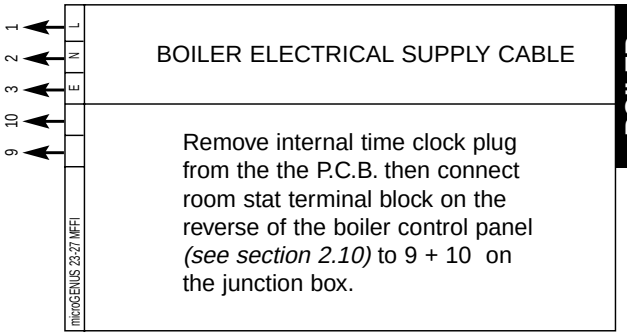

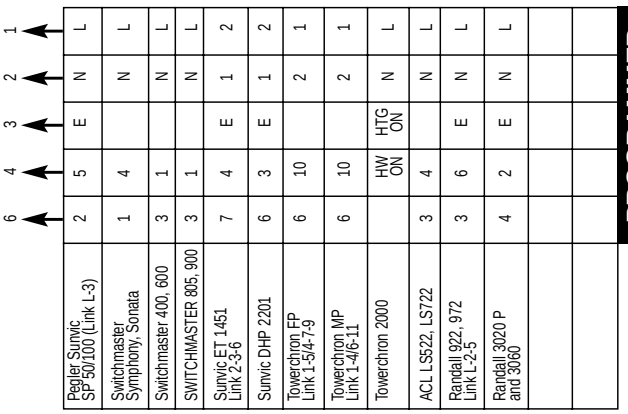

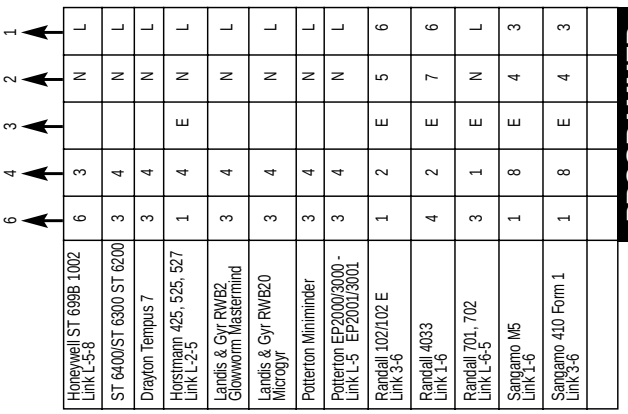

Based on Honeywell controls

SH009A

7. TECHNICAL INFORMATION

			mi GENUS 23 MFFI	mi GENUS 27 MFFI
CE Certification			63AU4549	63AU4549
Heat Input		max/min kW	25.6/11.0	29.8/12.0
Heat Output		max/min kW		
Efficiency of Nominal Heat Input		%	92.9	93.5
Efficiency at 30% of Nominal Heat Input		%	91.1	90.7
Heat Loss to the Casing (ΔT=50°C)		%	1.0	0.2
Flue Heat Loss with Burner Operating		%	6.1	6.3
Flue Heat Loss with Burner Off		%	0.4	0.4
Maximum Discharge of Fumes (G20)		Kg/h	49.5	60
Residual Discharge Head		mbar	0.96	1.60
Consumption at Nominal Capacity(G20)		m^3/h	2.72	3.15
Gas Consumption after 10 Minutes*		m^3	0.32/0.39	0.37
(15°C, 1013 mbar) (G30-G31)		Kg/h	2.02/2.00	2.34/2.31
Temp. of exhaust fumes at nominal capacity		°C	123	128.8
CO_2 Content		%	7.2	6.9
O_2 Content		%	7.5	8.1
CO Content		ppm	51.9	48
Minimum Ambient Temperature		°C	+5	+5
Head Loss on Water Side (max) (ΔT=20°C)		mbar	200	200
Residual Head of System		bar	0.25	0.25
Heating Temperature		max/min °C	82/42	82/42
Domestic Hot Water Temperature		max/min °C	56/36	56/36
D.H.W. Flow Rate ΔT=35°C		l/min	9.7	11.4
D.H.W. Flow Rate ΔT=35°C		gal/min	2.2	2.6
D.H.W. Minimum Flow Rate		l/min	2.6	2.6
Pressure of Domestic Hot Water		max/min bar	8/0.2	8/0.2
Expansion Vessel Capacity		l	6	6
Expansion Vessel Pre-load Pressure		bar	1	1
Maximum Water Content of System		l	130	130
Maximum Heating Pressure		bar	3	3
Nominal Pressure	Natural Gas (G20)	mbar	20	20
	LPG (G30-G31)	mbar	30-37	30-37
Electrical Supply		V/Hz	230 / 50	230 / 50
Power Consumption		W	140	155
Protection Grade of Electrical System		IP	X4D	X4D
Internal Fuse Rating			FAST 2 AT	FAST 2 AT
Weight		Kg	38	39
G.C. Number			**47-116-14**	**47-116-15**

*Calculated at 70% maximum output

Manufacturer: **Merloni TermoSanitari SpA - Italy**

Commercial subsidiary: **MTS (GB) LIMITED**
MTS Building
Hughenden Avenue
High Wycombe
Bucks HP13 5FT
Telephone: (01494) 755600
Fax: (01494) 459775
internet: http://www.mtsgb.ltd.uk
E-mail: info@mtsgb.ltd.uk
Technical Service Hot Line: (01494) 539579

23 99 84 1469 312 - Stampa: bieffe RECANATI