micro GENUS II

microGENUS II 24 MFFI
microGENUS II 28 MFFI
microGENUS II 31 MFFI

Installation and Servicing Instructions

Type C Boilers

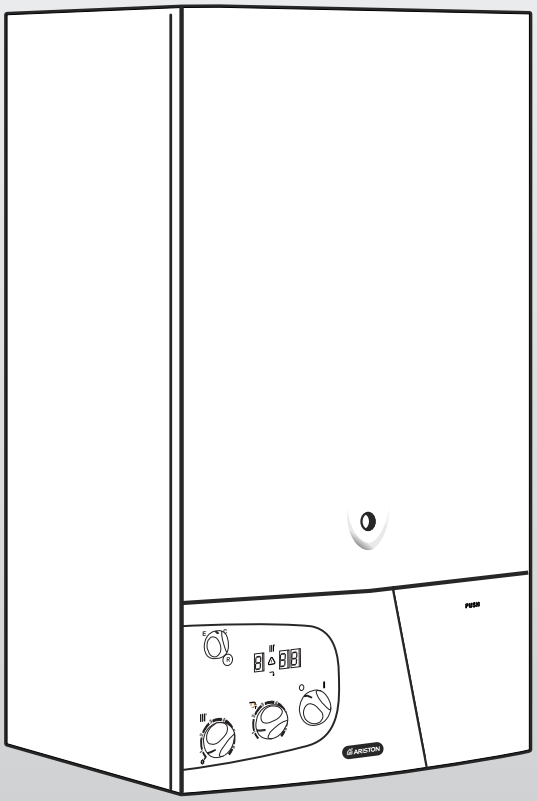

G.C.N: 47-116-25 (24kW)
G.C.N: 47-116-26 (28kW)
G.C.N: 47-116-27 (31kW)

LEAVE THESE INSTRUCTIONS WITH THE END-USER

benchmark™ COLLECTIVE MARK

The code of practice for the installation, commissioning & servicing of central heating systems

ARISTON

20000222999831846211204000000000

Country of destination: GB, IE

TABLE OF CONTENTS

1. GENERAL INFORMATION — Page. 3

1.1 General Instructions — Page. 3
1.2 Overall View — Page. 4

2. INSTALLATION — Page. 4

2.1 Reference Standards — Page. 5
2.2 Siting the Appliance — Page. 5
2.3 Overall Dimensions — Page. 6
2.4 Clearances — Page. 6
2.5 Mounting the Appliance — Page. 6
2.6 Electrical Connection — Page. 7
2.7 Gas Connection — Page. 8
2.8 Water Connection — Page. 8
2.9 Flue Connection — Page. 10
2.10 Control Panel — Page. 18
2.11 Digital Display and Fault Codes — Page. 18
2.12 Removing the Front Panel — Page. 19
2.13 Room Thermostat Connection — Page. 19
2.14 Electrical/System Diagrams — Page. 20
2.15 Water Circuit Diagram — Page. 21

3. COMMISSIONING — Page. 22

3.1 Initial Preparation — Page. 22
3.2 Initial Start-up — Page. 23
3.3 Operational Adjustments — Page. 23
3.4 Combustion Analysis — Page. 24
3.5 Product of Combustion Discharge Monitoring — Page. 24
3.6 Boiler Safety Systems — Page. 24
3.7 Draining the System — Page. 26
3.8 Completion — Page. 26
3.9 Operational Checks — Page. 26
3.10 Instructing the End User — Page. 26

4. GAS ADJUSTMENTS — Page. 27

4.1 Changing the Type of Gas — Page. 27
4.2 Adjusting the Gas Pressures — Page. 28

5. MAINTENANCE — Page. 32

6. SERVICING INSTRUCTIONS — Page. 33

6.1 Replacement of Parts — Page. 33
6.2 To Gain General Access — Page. 33
6.2.1 Removing the Front Panel — Page. 33
6.2.2 Removing the Sealed Chamber Front Panel — Page. 34
6.2.3 Removing the Side Panels — Page. 34
6.3 Access to the Combustion Chamber — Page. 35
6.3.1 Removing the Combustion Chamber — Page. 35
6.3.2 Removing the Burner and Jets — Page. 35
6.3.3 Removing the Electrodes — Page. 35
6.3.4 Removing the Main Heat Exchanger — Page. 36
6.3.5 Removing the Air Pressure Switch — Page. 37
6.3.6 Removing the Fan — Page. 38
6.4 Access to the Gas Valve — Page. 38
6.4.1 Removing the Spark Generator — Page. 38
6.4.2 Removing the Gas Valve — Page. 39
6.5 Access to the Water Circuit — Page. 39
6.5.1 Removing the D.H.W. (secondary) exchanger — Page. 39
6.5.2 Removing the Pump Pressure Switch — Page. 40
6.5.3 Removing the Safety Valve — Page. 41
6.5.4 Removing the Automatic Air Vent — Page. 41
6.5.5 Removing the Pump — Page. 42
6.5.6 Removing the Pressure Gauge — Page. 43
6.5.7 Removing the Expansion Vessel — Page. 43
6.5.8 Removing the Overheat Thermostat — Page. 44
6.5.9 Removing the C.H. Temperature probe (N.T.C.) — Page. 44
6.5.10 Removing the D.H.W. Temperature Sensor (N.T.C.) — Page. 45
6.5.11 Removing the divertor valve actuator — Page. 45
6.5.12 Removing the D.H.W. Flow Switch — Page. 45
6.6 Access to the Control System — Page. 46
6.6.1 Checking the Fuses — Page. 46
6.6.2 Removing the P.C.B. — Page. 47
6.6.3 Removing the Time Clock — Page. 48

7. FAULT FINDING — Page. 49

7.1 Fault Finding Guide (Flow-Charts) — Page. 49

8. EXPLODED VIEW — Page. 52

8.1 Short Spares List — Page. 53

9. TECHNICAL INFORMATION — Page. 54

1. GENERAL INFORMATION

This manual is an integral and essential part of the product. It should be kept with the appliance so that it can be consulted by the user and our authorised personnel.

Please carefully read the instructions and notices about the unit contained in this manual, as they provide important information regarding the safe installation, use and maintenance of the product.

For operating instructions please consult the separate Users Manual.

1.1 General Instructions

Read the instructions and recommendations in these Installation and Servicing Instructions carefully to ensure proper installation, use and maintenance of the appliance.

Keep this manual in a safe place. You may need it for your own reference while Servicing Technicians or your installer may need to consult it in the future.

This is a combined appliance for the production of central heating (C.H.) and domestic hot water (D.H.W.) and is intended for use in domestic properties.

This appliance **must be used only** for the purpose for which it is designed.
The manufacturer declines all liability for damage caused by improper or negligent use.

No asbestos or other hazardous materials have been used in the fabrication of this product.

Before connecting the appliance, check that the information shown on the data plate and the table in section 9 comply with the electric, water and gas mains of the property. You will find the data plate on the reverse of the control panel.
The gas with which this appliance operates is also shown on the data label inside the boiler casing.

Do not install this appliance in a damp environment or close to equipment which spray water or other liquids.
Do not place objects on the appliance.
Do not allow children or inexperienced persons to use the appliance without supervision.

If you smell gas in the room, **do not turn on or off** light switches, use the telephone or any other object which might cause sparks.
Open doors and windows immediately to ventilate the room.
Shut the gas mains tap (at or adjacent to the gas meter) or the valve of the gas cylinder and call your Gas Supplier immediately.
If you are going away for a long period of time, remember to shut the mains gas tap or the gas cylinder valve.

Always disconnect the appliance either by unplugging it from the mains or turning off the mains switch before cleaning the appliance or carrying out maintenance.

In the case of faults or failure, switch off the appliance and turn off the gas tap. Do not tamper with the appliance.
For repairs, call your local Authorised Servicing Agent and request the use of original spare parts. For in-guarantee repairs contact MTS (GB) Limited.

1.2 Overall View

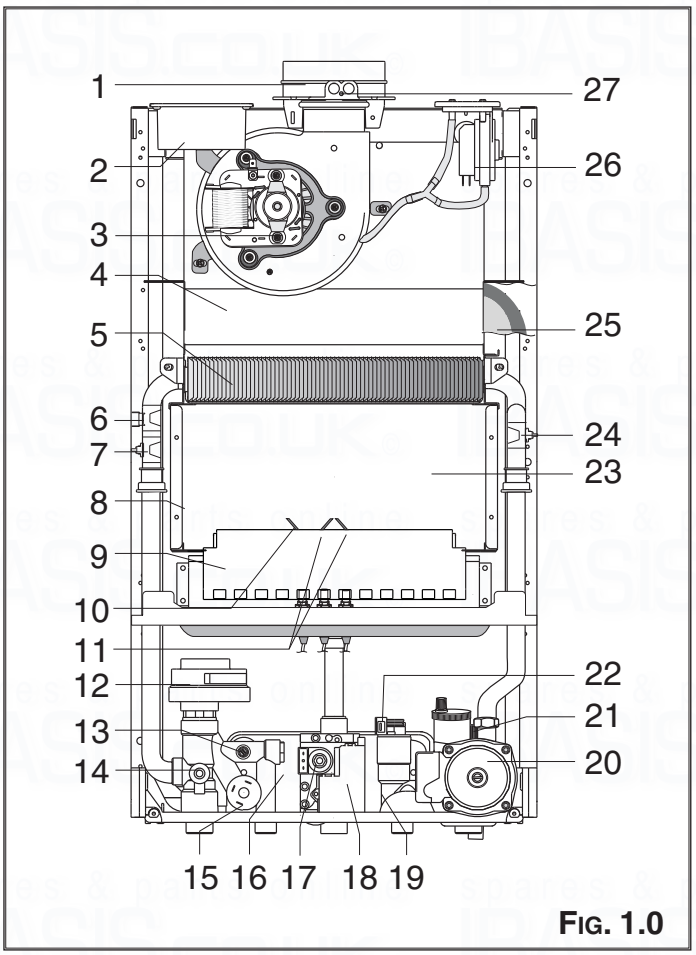

Fig. 1.0

Legend:

1. Flue Manifold
2. Air Intake for Twin Pipe Flue Systems
3. Fan
4. Combustion Chamber Hood
5. Main Heat Exchanger
6. Overheat Thermostat
7. Central Heating Flow Temperature Probe
8. Combustion Chamber Insulation Panel
9. Burner
10. Detection Electrode
11. Ignition Electrodes
12. Motorised Valve
13. Domestic Hot Water Temperature Probe
14. Drain Valve
15. Low Water Pressure Switch
16. Secondary Heat Exchanger
17. Gas Valve
18. Spark Generator
19. Cold Water Inlet Filter
20. Pump (w/auto air vent)
21. Safety Valve
22. D.H.W. Flow Switch
23. Combustion Chamber
24. Central Heating Return Temperature Probe
25. Expansion Vessel
26. Air Pressure Switch
27. Combustion Analysis Test Point

2. INSTALLATION

2.1 Reference Standards

The technical information and instructions provided herein below are intended for the installer / Servicing Technician so that the unit may be installed and serviced correctly and safely.

The appliance is only suitable for installation in GB and IE and should be installed in accordance with the rules in force

In GB, the installation must be carried out by a CORGI registered installer. It must be carried out in accordance with the relevant requirements of the Gas Safety (Installation and Use) Regulations, the appropriate Building Regulations either The Building Regulations (Scotland), Building Regulations (Northern Ireland), The Water Fittings Regulations or Water byelaws in Scotland.

In GB, it is necessary to comply with the Water Supply (Water Fittings) Regulations 1999 (or for Scotland, The Water Byelaws 2000, Scotland).

The microGENUS II is an Approved Product under the Water Regulations.

To comply with the Water Regulations your attention is drawn to The Water Regulations guide, published by the Water Regulations Advisory Service (WRAS) gives full details of the requirements. In IE, the requirements given in the current edition of I.S.813 and the current Building Regulations must be followed.

Installation should also comply with the following British Standard Codes of Practice
In the Republic of Ireland in accordance with the current

BS 7593:1992	**Treatment of water in domestic hot water central heating systems**
BS 5546:1990	**Installation of hot water supplies for domestic purposes**
BS 5440-1:2000	**Flues**
BS 5440-2:2000	**Air supply**
BS 5449:1990	**Forced circulation hot water systems**
BS 6798:1987	**Installation of gas fired hot water boilers of rated input not exceeding 60kW**
BS 6891:1989	**Installation of low pressure gas pipe up to 28mm**
BS 7671:2001	**IEE wiring regulations**
BS 4814:1990	**Specification for expansion vessels**
BS 5482:1994	**Installation of L.P.G.**

Building Regulations, the current ETCI rules for electrical installation and with the following Codes of Practice:

I.S. 813	**Domestic Gas Installations**

2.2 Siting the Appliance

The appliance may be installed in any room or indoor area, although particular attention is drawn to the requirements of, in GB the current I.E.E. Wiring Regulations, in Scotland, the electrical provisions of the Building Regulations applicable in Scotland, and for IE the current edition of I.S. 813 and the current ETCI rules. With respect to the installation of the combined appliance in a room containing a bath or shower, the location of the boiler in a room containing a bath or shower should only be considered if there is no alternative.

Where a room-sealed appliance is installed in a room containing a bath or shower reference must be made to the relevant requirements. In GB this is the current I.E.E. Wiring Regulations and Building Regulations, in IE reference should be made to the current edition of I.S. 813 and the current ETCI rules.

If the boiler is to be fitted into a building of timber frame construction, reference should be made to the current edition of the Institution of Gas Engineers Publication IGE/UP/7 (Gas Installations in Timber Framed Housing).

The location must permit adequate space for servicing and air circulation around the appliance as indicated in Section 2.4.
The location must permit the provision of an adequate flue and termination.
For unusual locations special procedures may be necessary.
BS 6798-1987 gives detailed guidance on this aspect.
A compartment used to enclose the appliance must be designed specifically for this purpose. No specific ventilation requirements are needed for the installation within a cupboard.
This appliance is not suitable for outdoor installation.

The type C appliances (in which the combustion circuit, air vent intake and combustion chamber are air-tight with respect to the room in which the appliance is installed) can be installed in any type of room.

Secondary ventilation is not required with this boiler. The boiler must be installed on a solid, non-combustible, permanent wall to prevent access from the rear.

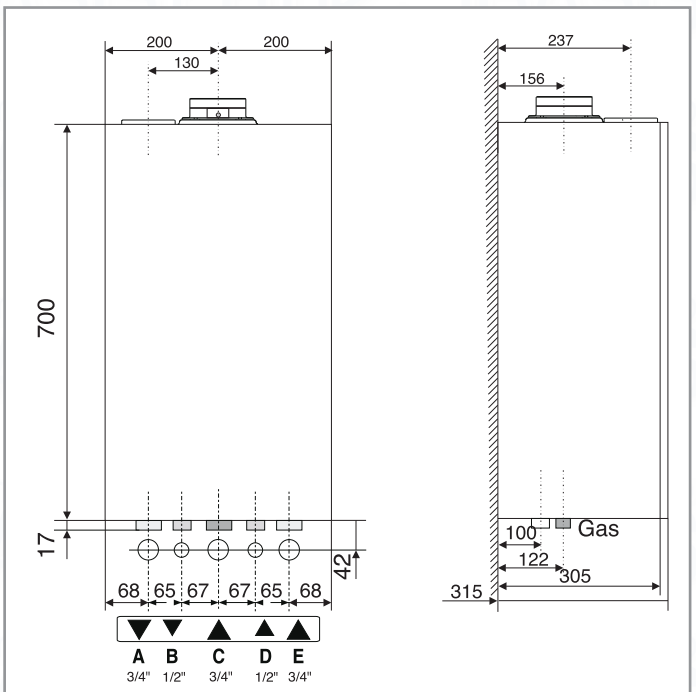

Fig. 2.1

2.3 Overall Dimensions

Legend:

A = Central Heating Flow (3/4")
B = Domestic Hot Water Outlet (1/2")
C = Gas Inlet (3/4")
D = Domestic Cold Water Inlet (1/2")
E = Central Heating Return (3/4")

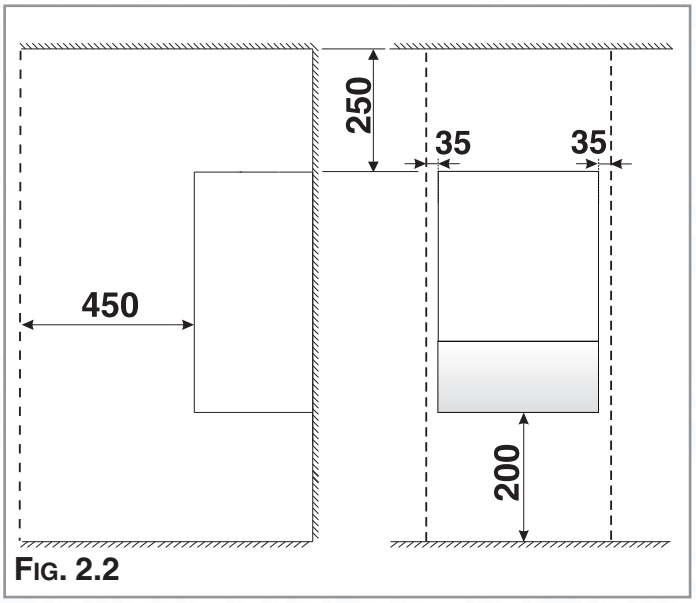

Fig. 2.2

2.4 Clearances

In order to allow access to the interior of the boiler for maintenance purposes, the boiler must be installed in compliance with the minimum clearances indicated in **Fig. 2.2**

2.5 Mounting the Appliance

After removing the boiler from its packaging, remove the template from the separate box containing the connection kit. Note: Pay particular attention to any test water that may spill from the appliance.

Place the template in the position the appliance is to be mounted and after ensuring it is hanging squarely, use it to drill the holes for the hanging bracket, connection kit and flue pipe(s) **NB:** For further information relating to the flue installation please refer to Section 2.9 Flue Connection. (If the appliance is to be fitted on a wall of combustible material, the wall **must** be protected by a sheet of fireproof material).
If the appliance is to be fitted into a timber framed building, guidance should be sought from the Institute of Gas Engineers document Ref: IGE/UP/7.
2.5.1. Drill the wall and plug using those supplied with the connections kit, position the hanging bracket and

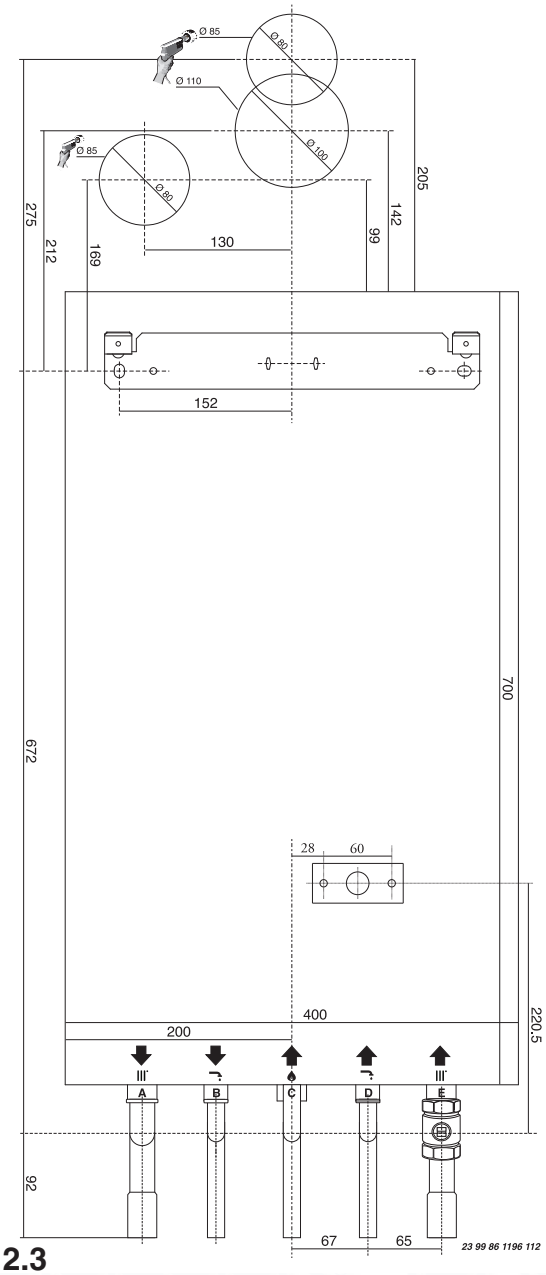

FIG. 2.3

secure with the wall screws supplied, assemble the connection kit and secure to the wall. **NOTE:** It is highly recommended that a spirit level be used to position the appliance to ensure that it is perfectly level.

2.5.2. Position the appliance on the hanging bracket and connect the connection kit to the boiler connections. (see also Sections 2.7 Gas Connections, 2.8 Water Connections & FIG. 2.3).

2.6 ELECTRICAL CONNECTION

For safety purposes, have a competent person carefully check the electrical system in the property, as the manufacturer will not be held liable for damage caused by the failure to earth the appliance properly or by anomalies in the supply of power. Make sure that the residential electrical system is adequate for the maximum power absorbed by the unit, which is indicated on the rating plate. In addition, check that the section of cabling is appropriate for the power absorbed by the boiler.

The boiler operates with alternating current, as indicated in the Technical Information table in Section 10, where the maximum absorbed power is also indicated. Make sure that the connections for the neutral and live wires correspond to the indications in the diagram. The appliance electrical connections are situated on the reverse of the control panel.

IMPORTANT!
In the event that the power supply cord must be changed, replace it with one with the same specifications.
Note: The diagrams for the electrical system are indicated in section 2.13.

Warning, this appliance must be earthed.

External wiring to the appliance must be correctly earthed and polarised and must be carried out by a competent person in accordance with relevant regulations and rules, in GB reference should be made to the current I.E.E. Regulations and applicable local regulations, in Scotland, the electrical provisions of the Building Regulations applicable in Scotland, and for IE the current edition of I.S. 813 and the current ETCI rules.
The appliance is supplied with a fly-lead already connected, this must be connected to a 220-240v supply fused at 3A and must facilitate complete electrical isolation of the appliance, by the use of a fused double pole isolator having a contact separation of at least 3 mm in all poles or alternatively, by **means of a 3 A** fused three pin plug and unswitched shuttered socket outlet both complying with BS 1363.
The point of connection to the Electricity supply must be readily accessible and adjacent to the appliance unless the appliance is installed in a bathroom when this must be sited outside the bathroom (see section 2.2).

Should external controls be required, the design of the external electrical circuits should be undertaken by a competent person, see Section 2.13 for further information.

2.7 Gas Connection

The local gas region contractor connects the gas meter to the service pipe.
If the gas supply for the boiler serves other appliances ensure that an adequate supply is available both to the boiler and the other appliances when they are in use at the same time.
Pipe work must be of an adequate size. Pipes of a smaller size than the boiler inlet connection should not be used.
The gas installation should also be in accordance with the relevant standards. In GB this is BS 6891, and in IE this is the current edition of I.S. 813.

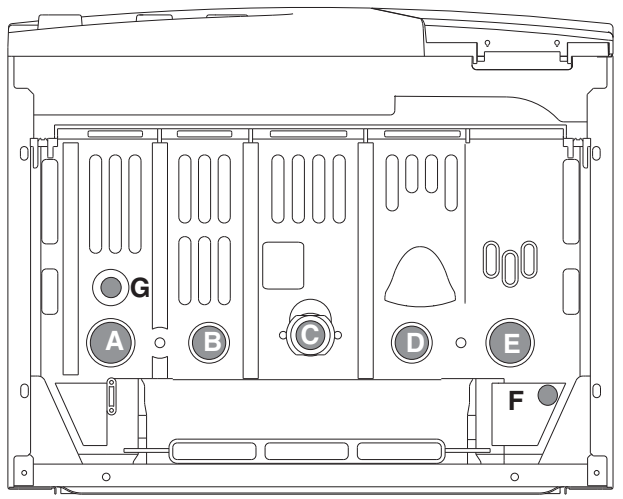

Fig. 2.4

2.8 Water Connections

View of the Boiler Connections

Legend:

A = Central Heating Flow
B = Domestic Hot Water Outlet
C = Gas Inlet
D = Domestic Cold Water Inlet
E = Central Heating Return
F = Safety Valve Outlet
G = Drain valve

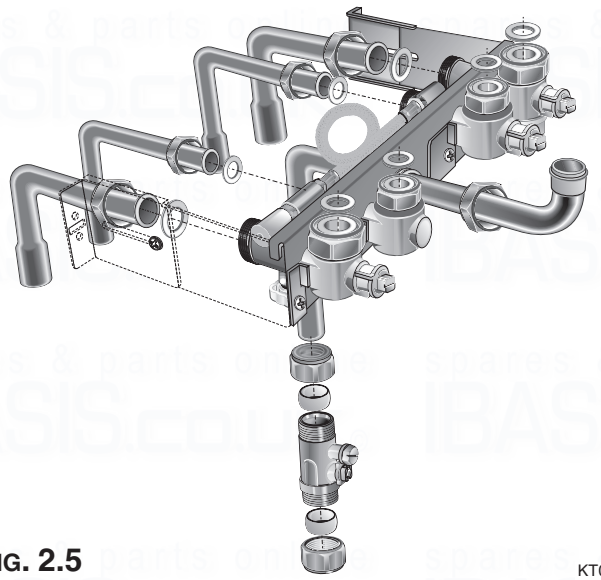

Fig. 2.5

Central Heating
Detailed recommendations are given in BS 6798:1987 and BS 5449-1:1990, the following notes are given for general guidance.
Pipe Work:
Copper tubing to BS EN 1057:1996 is recommended for water pipes. Jointing should be either with capillary soldered or compression fittings.
Where possible pipes should have a gradient to ensure air is carried naturally to air release points and water flows naturally to drain taps.
The appliance has a built-in automatic air release valve, however it should be ensured as far as possible that the appliance heat exchanger is not a natural
collecting point for air.
Except where providing useful heat, pipes should be insulated to prevent heat loss and avoid freezing.
Particular attention should be paid to pipes passing through ventilated spaces in roofs and under floors.
By-pass:
The appliance includes an automatic by-pass valve, which protects the main heat exchanger in case of reduced or interrupted water circulation through the heating system, due to the closing of thermostatic valves or radiators. ***System Design:***
This boiler is suitable only for sealed systems.
Drain Cocks:
These must be located in accessible positions to permit the draining of the whole system and should be fitted at all low points. The taps must be at least 15mm nominal size and manufactured in accordance with BS 2870:1980.
Safety Valve Discharge:

The discharge should terminate facing downward on the exterior of the building in a position where discharging (possibly boiling water & steam) will not create danger or nuisance, but in an easily visible position, and not cause damage to electrical components and wiring.
The discharge must not be over an entrance or a window or any other type of public access.

Air Release Points:

These must be fitted at all high points where air naturally collects and must be sited to facilitate complete filling of the system.
The appliance has an integral sealed expansion vessel to accommodate the increase of water volume when the system is heated.
It can accept up to 7 litres (1.3 gal) of expansion water. If the heating circuit has an unusually high water content, an additional sealed expansion vessel must be fitted, for GB refer to BS 7074 part 1 and for IE, refer to the current edition of I.S. 813.

Mains Water Feed - Central Heating:

A method for initially filling the heating system is supplied with the connection kit. The filling loop is connected between the cold water inlet and the central heating flow connections, and incorporates a non-return valve. To operate the filling loop, it is necessary to open both quarter turn handles, once the required pressure has been achieved, close both handles and disconnect the hose in accordance with water byelaws. Note: The installer should ensure that there are no leaks as frequent filling of the heating system can lead to premature scaling of the main exchanger and failure of hydraulic components.

Domestic Water:

The domestic water must be in accordance with the relevant recommendation of BS 5546:1990. Copper tubing to BS EN 1057:1996 is recommended for water carrying pipe work and must be used for pipe work carrying drinking water, a scale reducer should also be used to reduce the risk of scale forming in the domestic side of the heat exchanger.

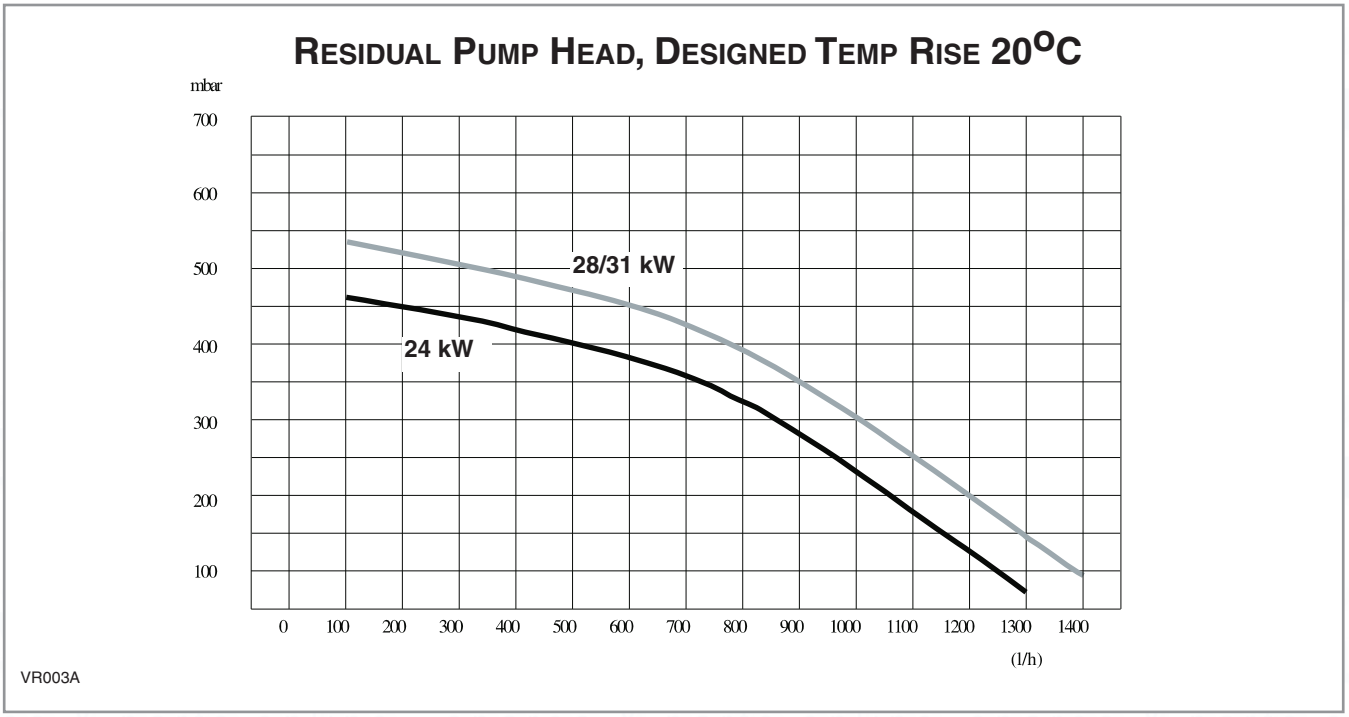

2.9 Flue Connections

Flue System

The provision for satisfactory flue termination must be made in GB this must be in accordance with BS 5440-1, for IE recommendations are given in the current edition of I.S.813.

The appliance must be installed so that the flue terminal is exposed to outside air.

The terminal must not discharge into another room or space such as an outhouse or lean-to.

It is important that the position of the terminal allows a free passage of air across it at all times.

The terminal should be located with due regard for the damage or discolouration that might occur on buildings in the vicinity and consideration must be given to adjacent boundaries.

In cold or humid weather water vapour may condense on leaving the flue terminal. The effect of such "pluming" must be considered.

If the terminal is less than 2 metres above a balcony, above ground or above a flat roof to which people have access, then a suitable terminal guard must be fitted. When ordering a terminal guard, quote the appliance model number.

A suitable terminal guard is available from:

TOWER FLUE COMPONENTS
Morley Road
Tonbridge
Kent TN9 1RA

The minimum acceptable spacing from the terminal to obstructions and ventilation openings are specified in **Fig. 2.6**.

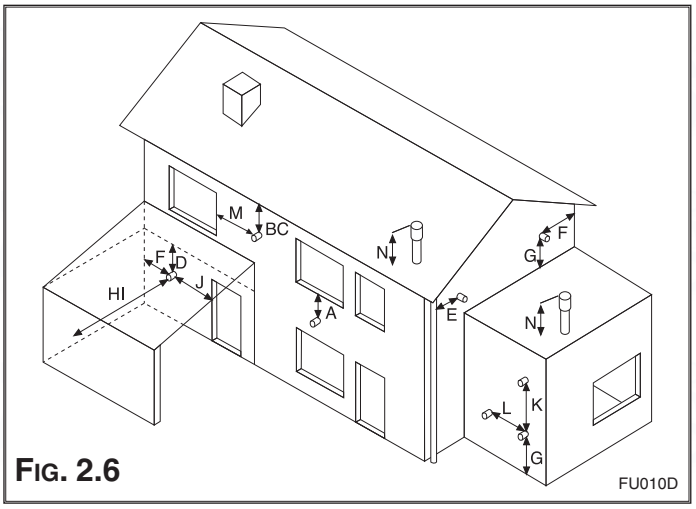

Fig. 2.6

Note: The flue must not terminate in a place likely to cause nuisance

Terminal Position		mm
A -	Directly above or below an openable window or other opening	300
B -	Below gutters, solid pipes or drain pipes	75
C -	Below eaves	200
D -	Below balconies or car-port roof	200
E -	From vertical drain pipes and soil pipes	150
F -	From internal or external corners	300
G -	Above ground or balcony level	300
H -	From a surface facing a terminal	600
I -	From a terminal facing a terminal	1200
J -	From an opening in the car port (e.g. door, window) into dwelling	1200
K -	Vertically from a terminal in the same wall	1500
L -	Horizontally from a terminal in the same wall	300
M -	Horizontally from an opening window	300
N -	Fixed by vertical flue terminal	

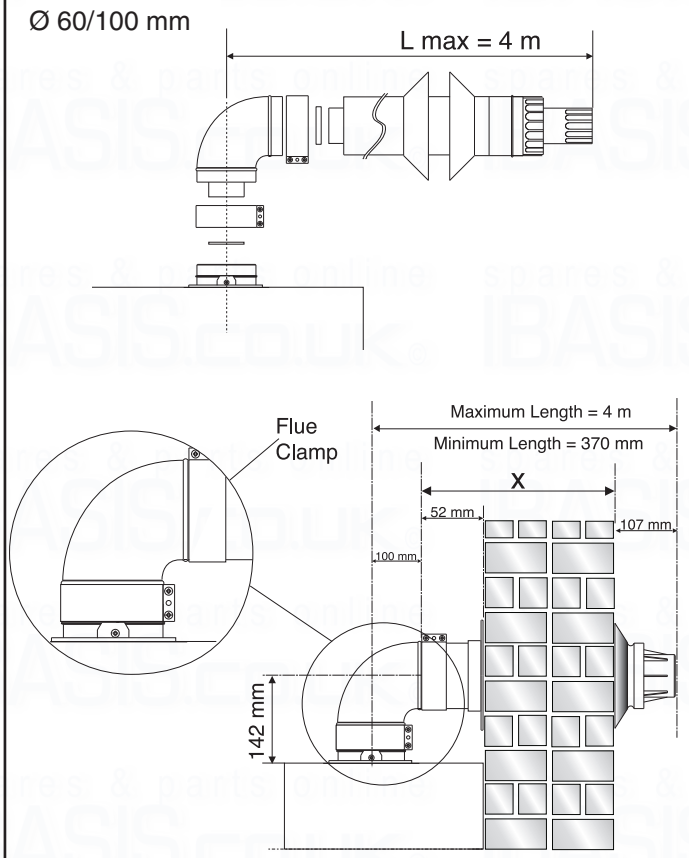

FIG. 2.7

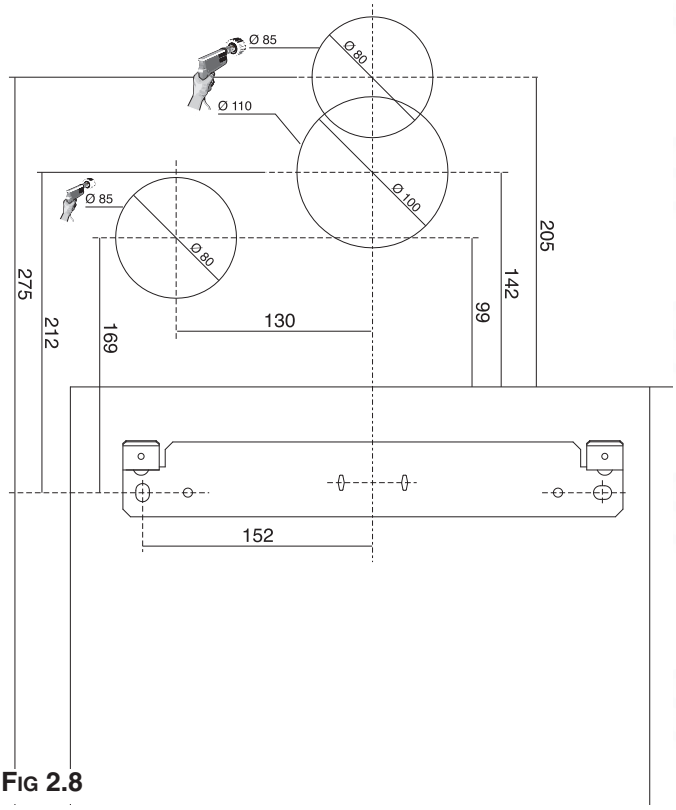

FIG 2.8

FITTING THE COAXIAL FLUE (HORIZONTAL)

(For Telscopic, Vertical Flue and Twin Pipe Instructions see page 12)

CONTENTS:

1x SILICONE O-RING (60mm)
1x ELBOW (90°)
2x WALL SEALS (INTERNAL & EXTERNAL)
1x ALUMINIUM FLUE PIPE INCLUDING TERMINAL (1 METRE - 60/100)
2x FLUE CLAMPS
8x SCREWS
2x FOAM SEALS

Once the boiler has been positioned on the wall, insert the elbow into the socket **(FIG 2.7)** and rotate to the required position. NOTE: It is possible to rotate the elbow 360° on its vertical axis.

Using the flue clamps, seals and screws supplied **(FIGS 2.7 AND 2.9)** secure the elbow to the boiler.

The 1 metre horizontal flue kit (705958) supplied is suitable for an exact **X dimension** of 823mm, and the 750mm horizontal flue kit (705785) is suitable for an exact **X dimension** of 573mm.

Measure the distance from the face of the external wall to the face of the flue elbow **(X - FIG 2.7),** add 22 mm to this measurement, you now have the total length of flue required (including the terminal), this figure must now be subtracted from 860mm, you now have the total amount to be cut from the plain end of the flue.

Cut the flue to the required length ensuring that the distance between the inner and the outer flue is maintained **(FIG 2.10)**.

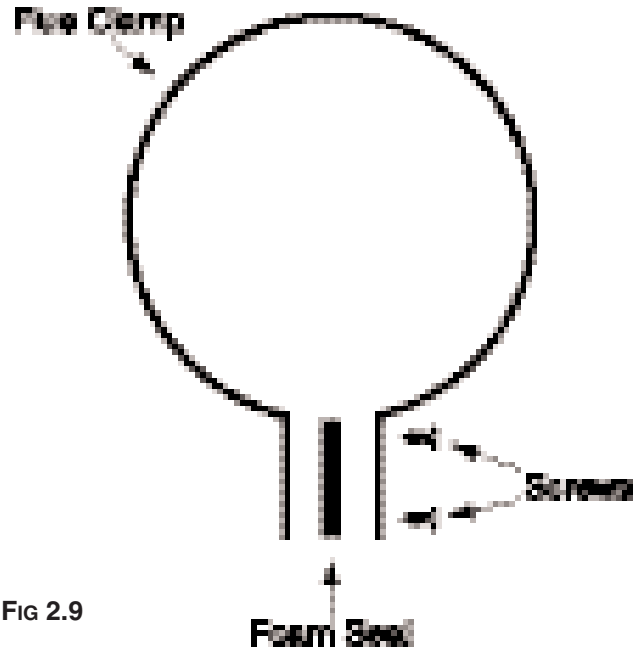

FIG 2.9

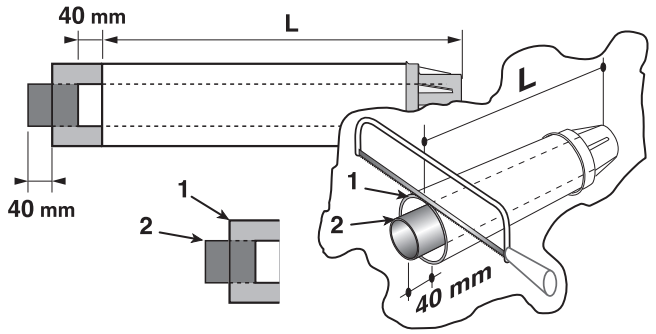

Fig 2.10

e.g. X = 508mm + 22mm = 530mm
860 - 530 = 330mm (Length to be cut from the plain end of the flue).

Once cut to the required length, ensure that the flue is free from burrs and reassemble the flue. If fitting the flue from inside of the building attach the grey outer wall seal to the flue terminal and push through the flue through the hole, once the wall seal has passed through the hole, pull the flue back until the seal is flush with the wall. Alternatively, the flue can be installed from outside of the building, the grey outer seal being fitted last.

WARNING
If the flue is longer than 1 metre, remove the restrictor (Fig. 2.11). If the flue is between 0-1 metre the restrictor remains fitted.
See table 2.1 (Page 17).

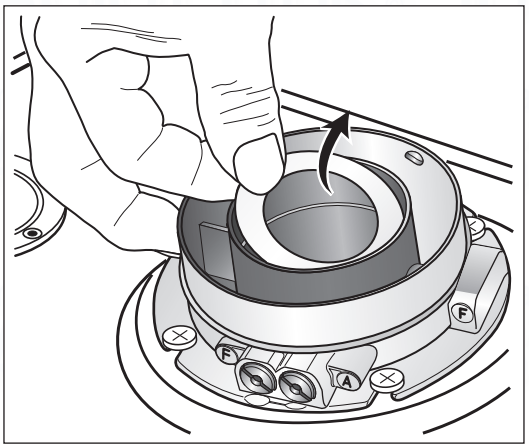

Fig 2.11

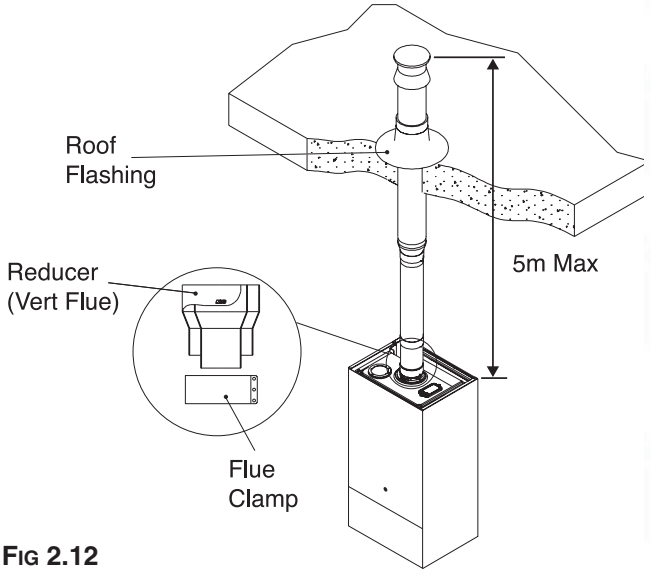

Fig 2.12

Fitting the Telescopic Flue Kit (Horizontal)

Contents:
1x Silicone O-Ring (60mm)
1x Elbow (90°)
2x Wall Seals (Internal & External)
1x Aluminium Flue Pipe including Terminal (Telescopic - 60/100)
2x Flue Clamps
8x Screws
2x Foam Seals

The telscopic flue is suitable for use with an exact minimum **X dimension** of 270mm and an exact maximum **X dimension** 470mm.

IMPORTANT!!
Do not extend the telescopic flue to an X dimension of more than 470mm. If longer lengths are required use extension pieces as necessary. Under no circumstances must the flue be cut.
The wall must then be made good around the flue (ensuring a fall of 1° is maintained away from the boiler to the flue terminal).
Once made good, place the inner (white) wall seal over the flue and push up to the wall, secure the flue to the elbow by using the clamp supplied.

For each additional 90° elbow 1 metre must be removed from the total flue length (maximum 4 metres including the 1st elbow). For each additional 45° elbow 0.5 metre must be subtracted from the total flue length (**Fig 2.13**).

Fitting the Coaxial Flue (Vertical)
(For Twin Pipe Instructions see page 13)

Contents:
1x Silicone O-Ring (60mm)
1x Elbow (90°)
2x Wall Seals (Internal & External)
1x Aluminium Flue Pipe including Terminal (Telescopic - 60/100)
2x Flue Clamps
8x Screws
2x Foam Seals

The vertical flue kit is supplied with a specially designed weather proof terminal fitted, it can be used either with a flat roof or a pitched roof. (see **Figs 2.12, 2.13**).

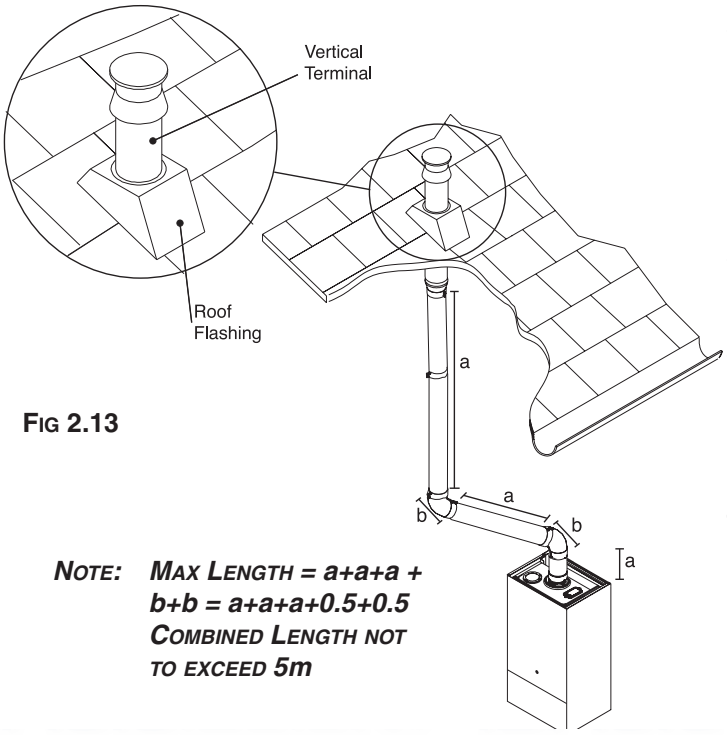

FIG 2.13

NOTE: ***MAX LENGTH = a+a+a + b+b = a+a+a+0.5+0.5 COMBINED LENGTH NOT TO EXCEED 5m***

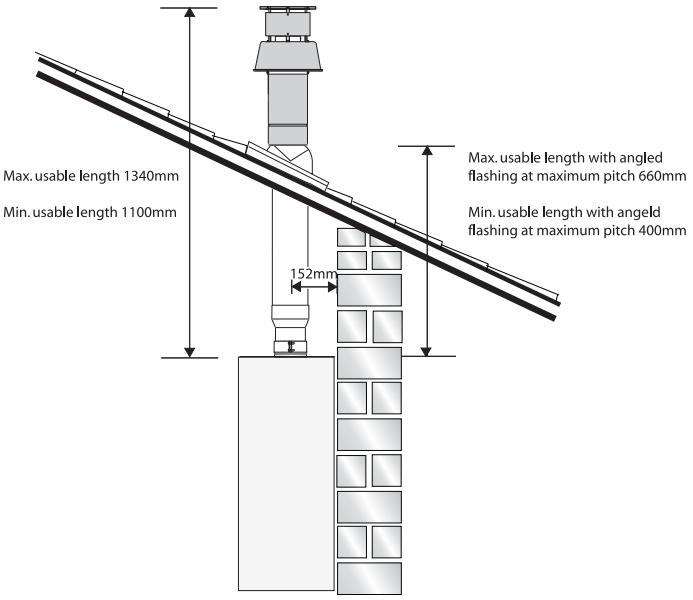

FIG 2.14

The Vertical flue kits maximum and minimum useable lengths with both flat and pitched roof flashings are indicated in **(Figs. 2.14 & 2.15).**

Before proceeding to fit the flue, ensure that the maximum flue length has not been exceeded and that all elbows and bends have been taken into consideration, the maximum flue length is 5 metres, for each additional 90° elbow 1 metre must be subtracted from the total flue length, and for each 45° 0.5 metres must be subtracted from the total flue length **(the offset and height of 2 x 45° can be seen in Fig. 2.16).**

Mark the position of the flue hole in the ceiling and/or roof **(see FIG. 2.14 for distance from wall to the centre of the flue).**

Cut a 125mm diameter hole through the ceiling and/or roof and fit the flashing plate to the roof.
Should it be necessary to cut the flue ***DO NOT*** cut the outer white air inlet tube, cut the aluminium exhaust flue 6mm longer than the outer white air tube when used at minimum length. ***DO NOT*** cut more that 250mm from the inner aluminium exhaust flue.

To connect the vertical flue kit directly to the boiler, place the adaptor **(see FIG 2.12)** (supplied with vertical flue kit) onto the exhaust manifold and secure with the clamp, the vertical flue kit must then be inserted through the roof flashing, this will ensure that the correct clearance above the roof is provided as the terminal is a fixed height.

Should extensions be required, they are available in 1 metre **(Part No. 705786)**, 500mm **(Part No. 705790)** and 160mm lengths **(Part No. 705812)**, they must be connected directly to the boiler and secured with the clamp supplied before connecting the adaptor to allow the vertical flue kit to be fitted. In the event that extension pieces need to be shortened, they ***must*** only be cut at the male end and it must be ensured that the distance between the inner and outer flue are kept **(Fig. 2.10).**

When utilising the vertical flue system, action must be taken to ensure that the flue is supported adequately to prevent the weight being transferred to the appliance flue connection.
When the flue passes through a ceiling or wooden floor, there must be an air gap of 25mm between any part of the flue system and any combustible material. The use of a ceiling plate will facilitate this. Also when the flue passes from one room to another a fire stop must be fitted to prevent the passage of smoke or fire, irrespective of the structural material through which the flue passes.

FITTING THE FLUE (TWIN PIPE)
Where it is not possible to terminate the flue within the distance permitted for coaxial flues, the twin flue pipe can be used by fitting a special adaptor to the flue connector and using the aperture for the air intake located on top of the combustion chamber.

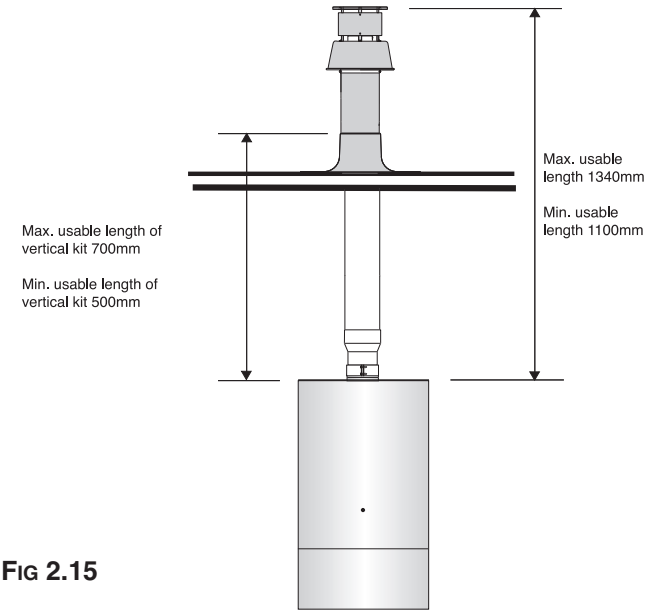

FIG 2.15

WARNING
IF THE FLUE IS LONGER THAN 1 METRE, REMOVE THE RESTRICTOR (FIG. 2.11). IF THE FLUE IS BETWEEN 0-1 METRE THE RESTRICTOR REMAINS FITTED.
SEE TABLE 2.1 (PAGE 17).

Minimum offset distance when using 2x 45° bends

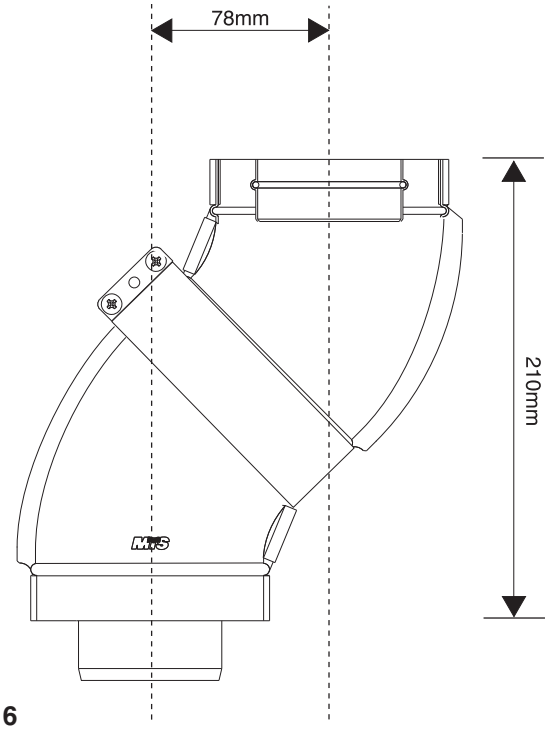

FIG 2.16

Considerations necessary for twin flue installation;

It is most important to avoid any possible condense formation entering the appliance.

According to Table 2.1 **(Page 17)** decide if condensation will form within the flue. If yes, there are two options;

1) Where condense will form but can be negated with insulated flue, install insulated the flue with a fall of 5mm in every metre away from the boiler.

2) The exhaust flue will have a fall of 3° back to the boiler and a suitable trap will be fitted on the exhaust as close to the boiler as possible, condense will then be suitably disposed of.

Where the flue runs through cold spots, i.e. loft areas, condense is likely to be formed, therefore a fall back to the boiler and a trap is required.
Always ensure that the flue is adequately supported, avoiding low points. (MTS supply suitable clamps as Part No. 705778).

To utilise the air intake it is necessary to:

Remove the 'knockout' of the air intake by cutting it with a suitable knife **(FIG. 2.17)**.

Insert the elbow/flue pipe into the air intake until it stops.

The twin flue pipes can be fitted with or without additional elbows and need no clamps, simply ensure that the red o-ring is inserted in the female end of the flue pipe and push the extension piece fully into the previous section of flue pipe or elbow, check that the o-ring is not dislodged when assembling the flue.

Twin pipe can also be converted back to Coaxial flue to enable vertical termination with a coaxial kit by using the pipe bridge (Twin - Coaxial Adaptor - Part No. 705767). When running the twin flue pipe vertically, a condense trap must always be used on the exhaust pipe.

It is not recommended that the pipe bridge for horizontal termination, however in the unlikely event that this proves to be a necessity it is extremely important that the entire flue has a fall of 3° back to the boiler, is suitably trapped and where the 60mm inner flue of the concentric terminal connects to the pipe bridge, this point must be adequately sealed with silicone sealant to avoid condense leakage at this point.

NOTE: Vertical twin flue installations must have a trap on the exhaust. MTS supply a suitable condense trap Part No. 705774 and recommend that this be used in the event that the flue may not form condense.

When siting the twin flue pipe, the air intake and exhaust terminals must terminate on the same wall, the centres of the terminal centres **must** be a minimum of 280 mm apart

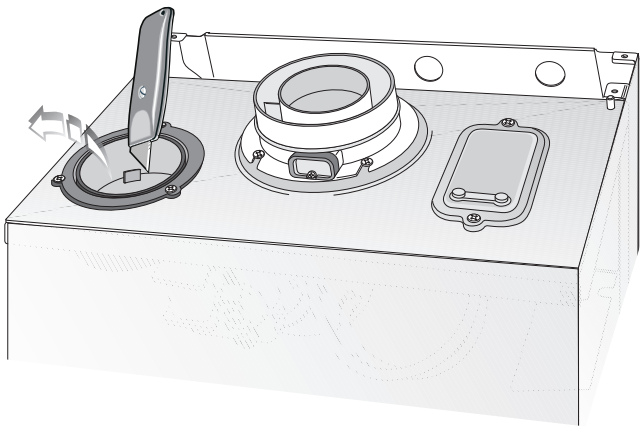

Fig 2.17

IMPORTANT!!!
Where condense will form within the flue system, ensure there is a fall back to the boiler of 3° and a suitable trap is fitted as close to the boiler as possible. MTS supply a suitable collector Part No. 705798 or a condensate discharge T with built in trap Part No. 705774.

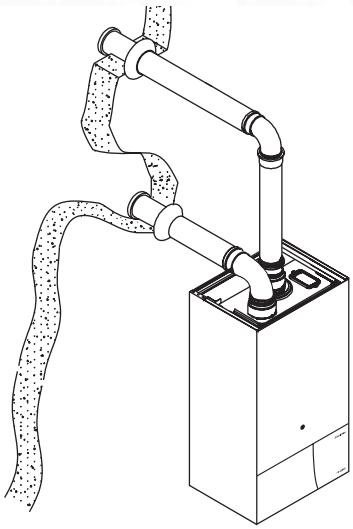

Fig 2.18

and the air intake **must** not be sited above the exhaust terminal **(refer to Fig. 2.21)**. The air intake pipe can be run horizontally, however, the terminal and the final 1 metre of flue must be installed with a fall away from the boiler to avoid rain ingress.

It is also strongly recommended that the air intake pipe run be constructed of insulated pipe to prevent condense forming on the outside of the tube.

The maximum permissible flue length for twin flue is dependent on the type of run used.

For flue runs with the intake and exhaust pipes under the same atmospheric conditions (Type 4) the maximum length is 60 metres (28kW), 46 metres (28kW) and 47 metres (31kW). For runs with the terminals under different atmospheric conditions (Type 5) the exhaust terminal **must** extend 0.5 metres above the ridge of the roof (this is not obligatory if the exhaust and air intake pipes are located on the same side of the building). For Type 5 also, the maximum permissible combined length is 59 metres (24kW), 48 metres (28kW) and 42 metres (31kW). Flue types are shown on Page 16 (**Fig. 2.20**).

The maximum length is reached by combining the total lengths of both the air intake and exhaust pipes. Therefore a maximum length of 40 metres for example, will allow a flue run of 20 metres for the air intake and 20 metres for the exhaust pipes, also for each 90° elbow 1.3 metres must be subtracted from the total length and for each 45° elbow 1 metre must be subtracted from the total flue length.
Some of the acceptable flue configurations are detailed on page 16 **(Fig. 2.20)**.

For further information relating to flue runs not illustrated, please contact the Technical Department on 01494 539579.

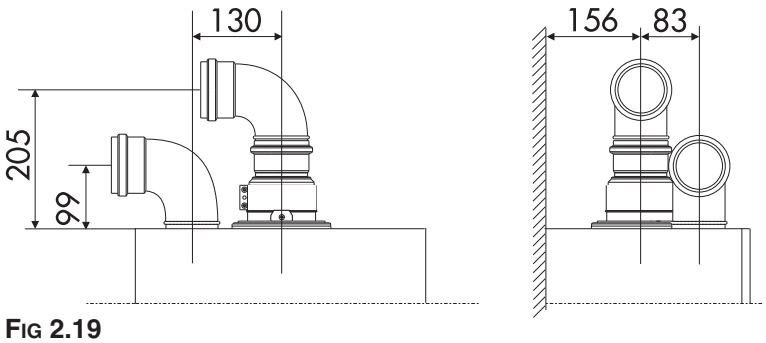

Fig 2.19

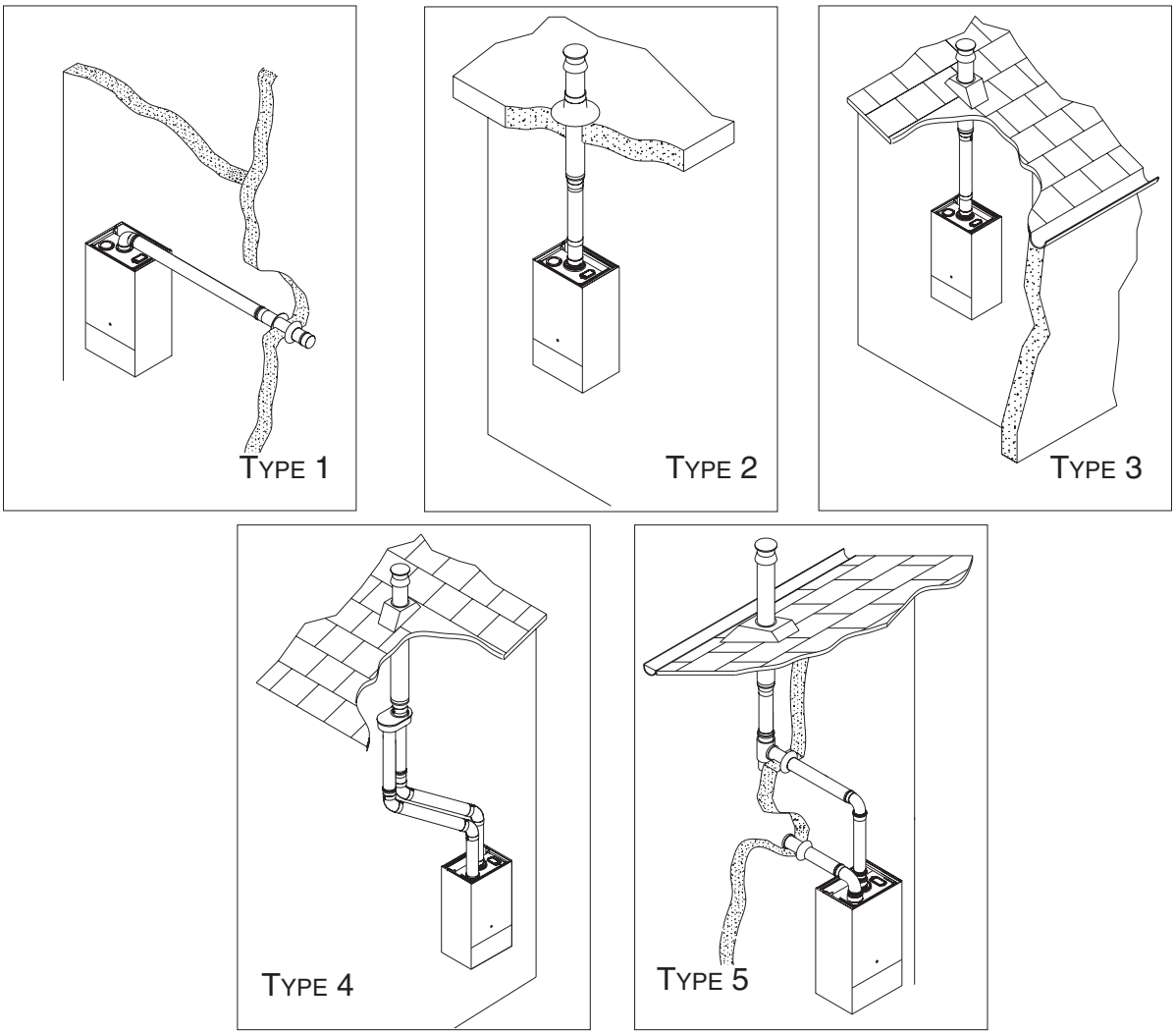

FIG. 2.20

NOTE: DRAWINGS ARE INDICATIVE OF FLUEING OPTIONS ONLY.

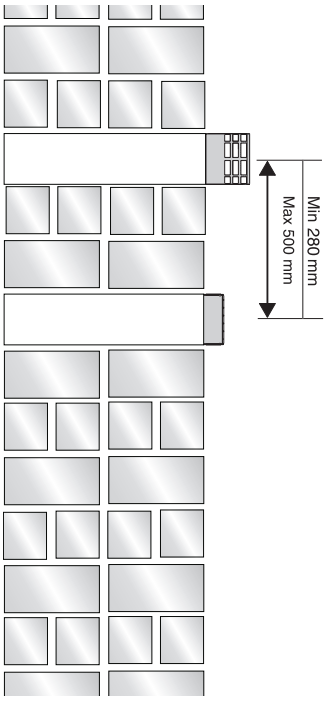

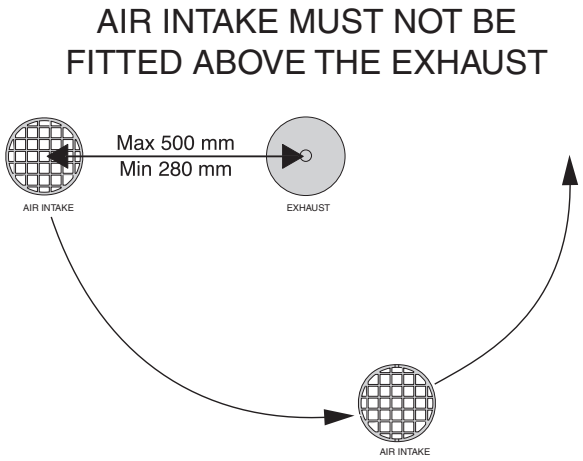

FIG 2.21

NOTE: WHERE 280MM CENTRES CANNOT BE ACHEIVED, THE EXHAUST TERMINAL CAN BE EXTENDED TO PROTRUDE FROM THE WALL BY 300MM.

TABLE 2.1

24 MFFI	Exhaust Type	Use the ø 41 mm Restrictor	Do not use the Restrictor	Maximum Flue Length	Risk of Condensation Forming			
Coaxial Systems ø 60/100	TYPE 1 TYPE 2 TYPE 3	Between 500 mm - 1 m	Between 1m - 4m Between 1m - 5m	4 m 5 m	NOT APPLICABLE		NOT APPLICABLE	
	Exhaust Type	**Use the ø 41 mm Restrictor**	**Do not use the Restrictor**	**Maximum Flue Length**	**Risk of Condensation Forming With: Standard Twin Pipe After:**		**Insulated Twin Pipe After:**	
Twin Pipe Systems ø 80/80	TYPE 4	Between 1m - 20 m	Between 20 m - 60 m	60 m	3 m with a ø 41 mm restrictor	4 m without a ø 41 mm restrictor	3 m with a ø 41 mm restrictor	4 m without a ø 41 mm restrictor
	TYPE 5	Between 1m - 25 m	Between 25 m - 59 m	59 m	3 m with a ø 41 mm restrictor	4 m without a ø 41 mm restrictor	3 m with a ø 41 mm restrictor	4 m without a ø 41 mm restrictor
28 MFFI	**Exhaust Type**	**Use the ø 43 mm Restrictor**	**Do not use the Restrictor**	**Maximum Flue Length**	**Risk of Condensation Forming**			
Coaxial Systems ø 60/100	TYPE 1 TYPE 2 TYPE 3	Between 500 mm - 1 m	Between 1m - 4m Between 1m - 5m	4 m 5 m	NOT APPLICABLE		NOT APPLICABLE	
	Exhaust Type	**Use the ø 43 mm Restrictor**	**Do not use the Restrictor**	**Maximum Flue Length**	**Risk of Condensation Forming With: Standard Twin Pipe After:**		**Insulated Twin Pipe After:**	
Twin Pipe Systems ø 80/80	TYPE 4	Between 1m - 14 m	Between 14 m - 46 m	46 m	4 m with a ø 43 mm restrictor	5 m without a ø 43 mm restrictor	4 m with a ø 43 mm restrictor	5 m without a ø 43 mm restrictor
	TYPE 5	Between 1m - 21 m	Between 21 m - 48 m	48 m	4 m with a ø 43 mm restrictor	5 m without a ø 43 mm restrictor	4 m with a ø 43 mm restrictor	5 m without a ø 43 mm restrictor
31 MFFI	**Exhaust Type**	**Use the ø 42 mm Restrictor**	**Do not use the Restrictor**	**Maximum Flue Length**	**Risk of Condensation Forming**			
Coaxial Systems ø 60/100	TYPE 1 TYPE 2 TYPE 3	Between 500 mm - 1 m	Between 1m - 4m Between 1m - 5m	4 m 5 m	NOT APPLICABLE		NOT APPLICABLE	
	Exhaust Type	**Use the ø 42 mm Restrictor**	**Do not use the Restrictor**	**Maximum Flue Length**	**Risk of Condensation Forming With: Standard Twin Pipe After:**		**Insulated Twin Pipe After:**	
Twin Pipe Systems ø 80/80	TYPE 4	Between 1m - 4 m	Between 4 m - 47 m	47 m	2 m with a ø 42 mm restrictor	7.5 m without a ø 42 mm restrictor	2 m with a ø 42 mm restrictor	7,5 m without a ø 42 mm restrictor
	TYPE 5	Between 1m - 11.5 m	Between 11.5 m - 42 m	42 m	7.4 m with a ø 42 mm restrictor	7.4 m without a ø 42 mm restrictor	7.4 m with a ø 42 mm restrictor	7,4 m without a ø 42 mm restrictor

* Where there is no risk of condense forming (and, therefore no requirement for a condense collector), ensure a minimum fall of 5mm per metre away from the appliance.

NOTE: UNDER SOME CIRCUMSTANCES, CONDENSE MAY FORM AT THE EXHAUST TERMINAL, SPECIAL ATTENTION MUST BE PAID WITH REGARD TO POSSIBLE CONDENSE DRIPPING FROM THE TERMINAL.

2.10 Control Panel

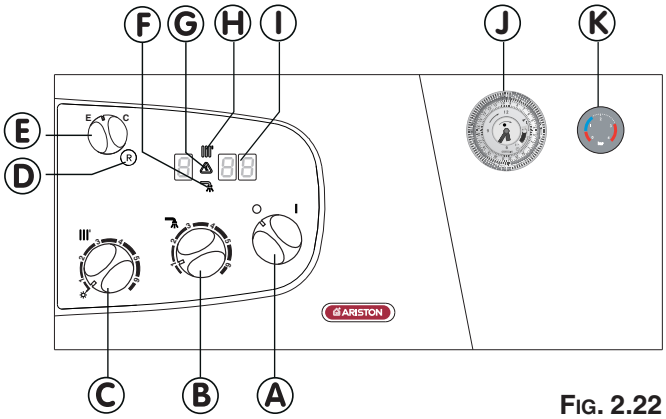

FR020A

Fig. 2.22

Legend:

A - On/Off Button
B - Domestic Hot Water Temperature Adjustment
C - Central Heating Temperature Adjustment
D - Reset Button/Flue Test analysis mode*
E - Comfort Mode Selector
F - Summer Mode LED (Green)
G - Ignition/Overheat Lockout LED (Red)
H - Central Heating (Winter Mode) LED (Green)
I - Digital Display (Fault Code/Water Temperature)
J - Time Clock
K- Central Heating System Pressure Gauge

* *Warning the flue analysis mode must only be selected by a qualified service engineer.*

2.11 Digitial Display and Fault Codes

The Control Panel has a 3 digit display, during normal operation the display will show one of three things on the two right hand digits;

During Stand-by (no demand for Central Heating or D.H.W.) 'on' will be shown on the display and no LEDs will light.

During a demand for Domestic Hot Water, the temperature of the outgoing hot water is displayed in °C (e.g. 38) and the summer mode LED will light (**F - Fig. 2.22**).

During a demand for Central Heating, the temperature of the central heating flow will be displayed in °C (e.g. 65) and the central heating mode LED will light (**H - Fig. 2.22**).

During the operation of the flue analysis mode* the display will show 'sc'.

Should a fault occur the display will show the fault code and one of two letters, for a non-volatile shutdown the letter 'A' will be shown followed by the two digit code for the fault eg. 'A02' and the red LED (**G - Fig. 2.22**) will light, a non-volatile shutdown will require the reset button (**D - Fig. 2.22**) to be pushed before the boiler will attempt to relight, should the boiler lockout again, the assistance of an Authorised Service Engineer should be sought.

Should the boiler develop a fault that cannot be corrected by resetting the boiler, the letter 'E' will be displayed followed by a two digit code (e.g. E33) indicating a volatile shutdown code, in the event of such a shutdown, the boiler will automatically resume operation once the cause behind it is resolved. Should it not the assistance of an Authorised Service Engineer would be required.

A list of the fault codes can be found opposite.

DISPLAY	CAUSE
A01	No flame after safety time (7 seconds)
A03	The heating flow temperature exceeds 103°C during operation
A97	Problem with the electronic monitoring
A98	Problem with the electronic monitoring
A99	Problem with the electronic monitoring
E02	Insufficient water pressure
E04	Domestic hot water temperature probe in open circuit
E05	Domestic hot water temperature probe short circuited
E06	Heating flow temperature probe in open circuit
E07	Heating flow temperature probe short circuited
E08	Heating return temperature probe in open circuit
E09	Heating return temperature probe short circuited
E20	Flame detected with gas valve closed
E21	Error in the electrical connection (live and neutral crossed)
E33	The air pressure switch is closed before the ignition sequence
E34	The air pressure switch does not close when the fan runs
E99	More than 5 RESETS of the boiler in 15 minutes.

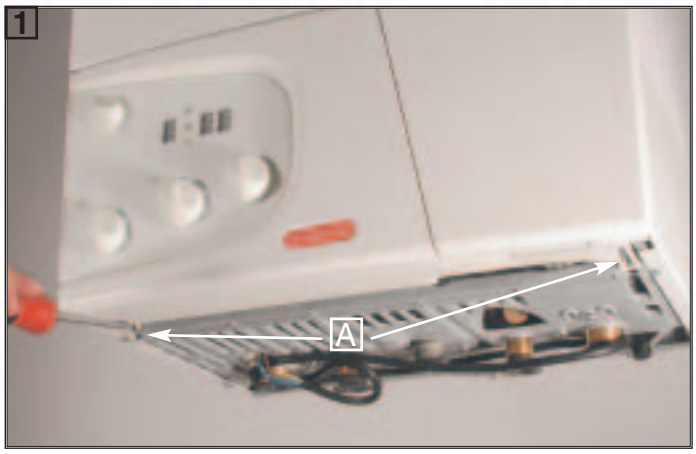

2.12 Removing the Front Panel

In order to access the inside of the boiler, it is necessary to unscrew the fastening screws **"A"** of the control panel located on the lower part of the panel itself.
The control panel moves downward and when pulled forward rotates on two lateral hinges.
The panel stays in a horizontal position, which allows access to the inner parts of the boiler.
To dismantle the front casing panel it is necessary to:
1 - Remove the two screws **"B"**;
2 - Move the front casing panel up and lift forward.

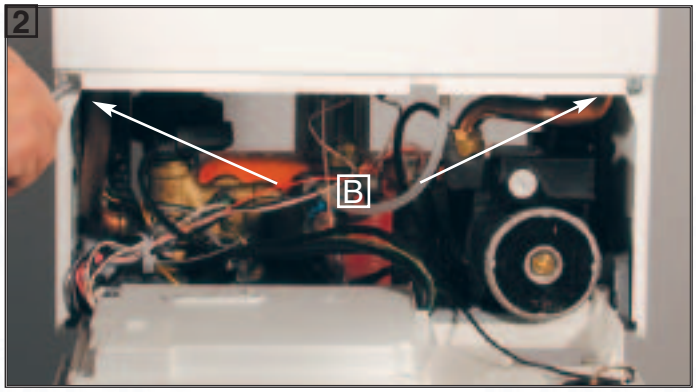

2.13 Room Thermostat Connection

To connect a room thermostat, it is necessary to:
1. - Open the control panel as indicated in **section 2.12**.
2.- Remove the screws **"A"** from the terminal block on the reverse of the control panel.
3. - Insert the thermostat cable through the cable grommet and fasten it by means of the cable-clamp provided.
4. - Connect the thermostat wires to the terminal block **(Diagram A).**
5.- If a remote time clock is to be fitted, disconnect the integral time clock from the P.C.B.
6. - Using a volt-free switching time clock, connect the switching wires from the time clock following points 1-4 above **(Diagram B).**
7. - If using an external time clock and room thermostat, these must be connected in series as points 1-7 above **(Diagram C).**

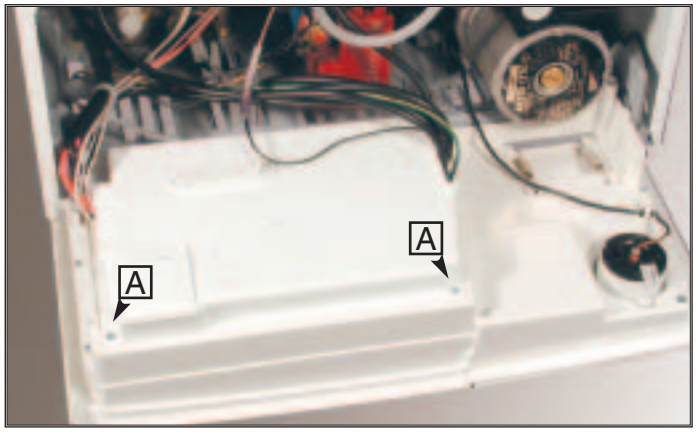

Note: Only a low voltage room thermostat capable of volt free switching must be used.
Factory fitted integral wiring must not be disturbed when wiring external controls.
Do not run low voltage cables alongside supply cables.

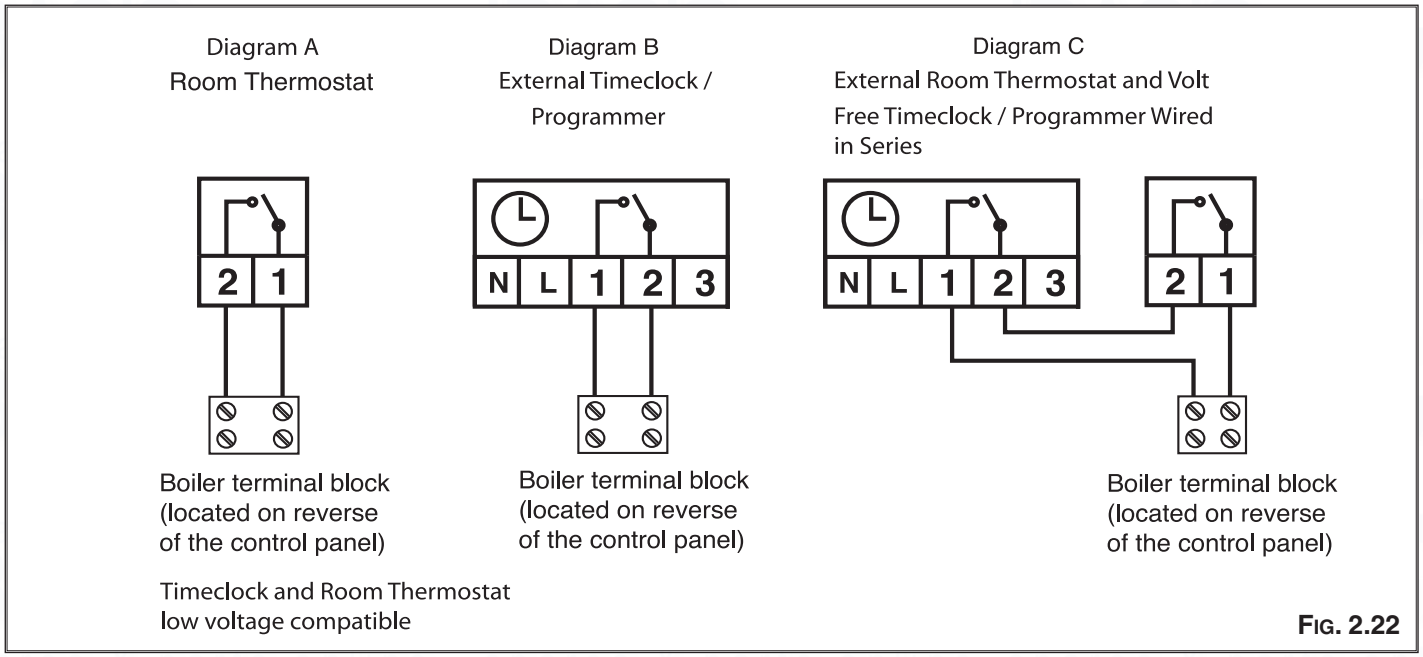

Fig. 2.22

2.14 Electrical/System Diagrams

Fig. 2.23

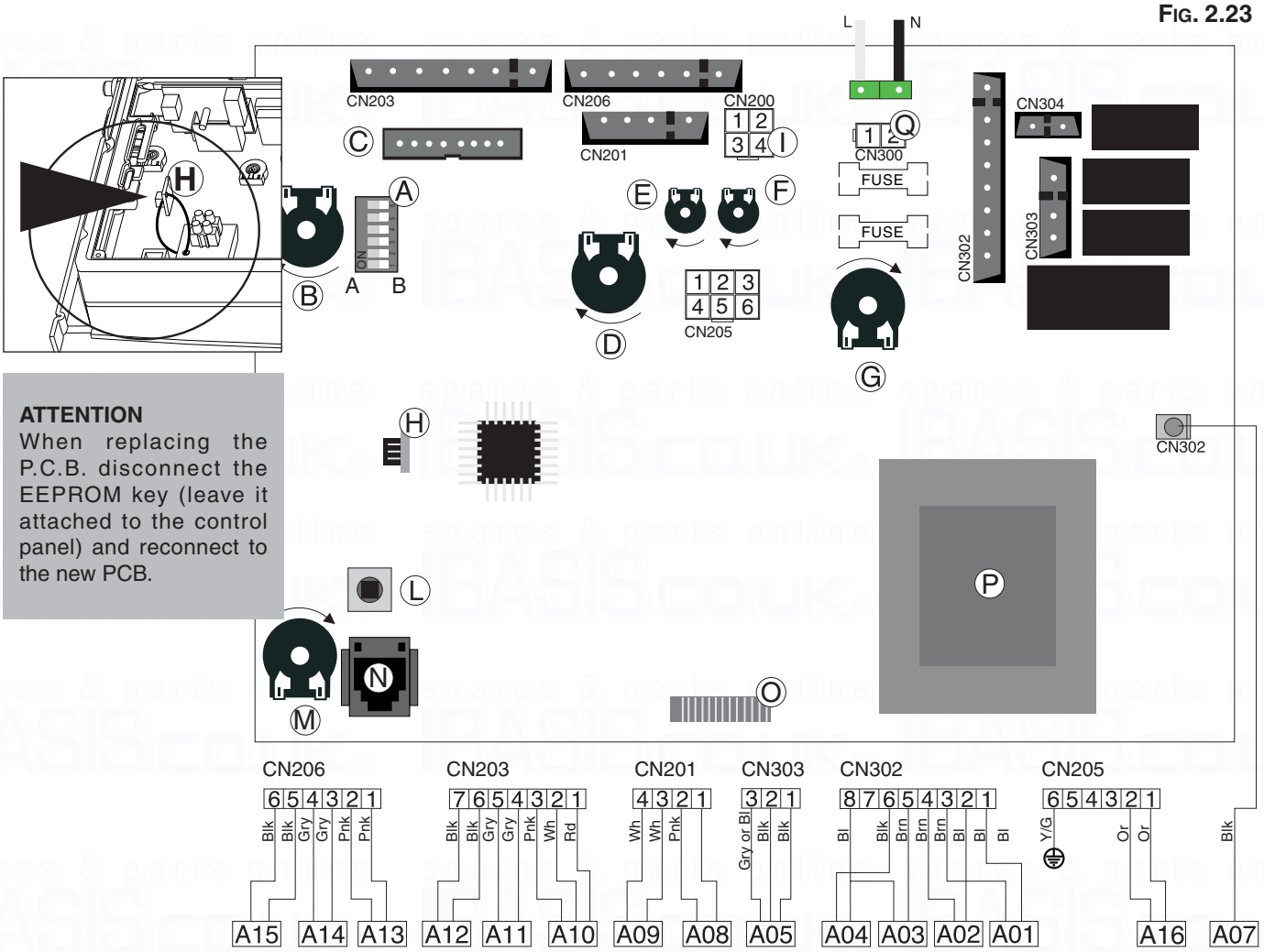

A - Dip Switch:
- *1 - Do Not Use (jumper is factory set in position B)*
- *2 - Anti-Cycling Device Adjustment for Heating*
  Position A = 0 mins Position B = 2 mins
- *3 - Do Not Use (jumper is factory set in position B)*
- *4 - Do Not Use (jumper is factory set in position B)*
- *5 - Fan over-run selector (after D.H.W. is drawn)*
  Position A = ON Position B = OFF
- *6 - Do Not Use (jumper is factory set in position B)*

B - Summer/Winter Switch - Central Heating Temperature Regulation
C - Connector for Remote Control (Climate Manager)
D - Domestic Hot Water Temperature Regulation
E - Soft-light Regulation
F - Maximum Central Heating Temperature Regulation
G - ON/OFF Selector
H - EEPROM
I - Time Clock Connector
L - Reset Push Button
M - Economy/Comfort Selector
N - EASY Teleservice (optional) P.C.B. Section
O - Display P.C.B. Connector
P - Transformer
Q- Modem Connection (optional - EASY Teleservice)

A01 - Circulation Pump
A02 - Fan
A03 - Spark Generator Power Supply
A04 - Gas Valve Power Supply
A05 - Motorised Valve
A07 - Flame Sensor
A08 - Central Heating Flow NTC
A09 - Domestic Hot Water NTC
A10 - Domestic Hot Water Flow Switch
A11 - Low Water Pressure Switch
A12 - Modulator
A13 - Air Pressure Switch
A14 - Overheat Thermostat
A15 - External Timer/Room Thermostat
A16 - Central Heating Return NTC

COLOURS:
Gy - Grey
Wh - White
Rd - Red
Br - Brown
Bl - Blue
Blk - Black
Pk - Pink

2.15 Water Circuit Diagram

Fig. 2.24

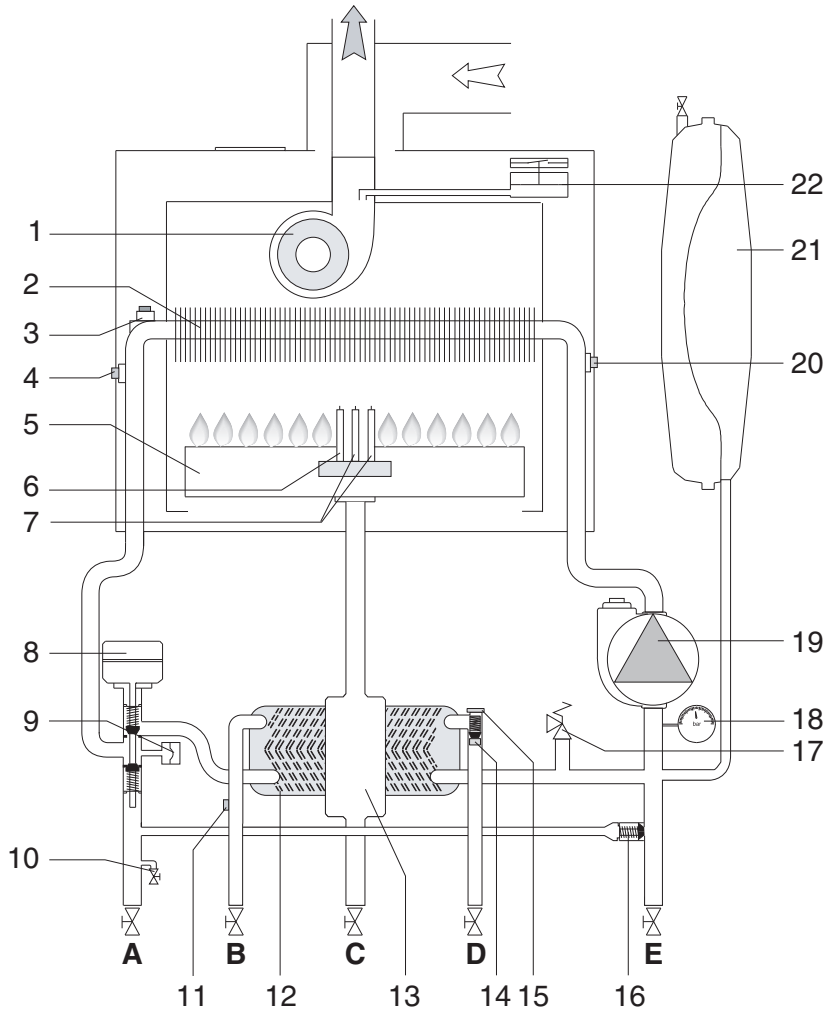

Legend:

1. Fan
2. Heat Exchanger
3. Overheat Thermostat
4. Central Heating Flow NTC
5. Burner
6. Detection Electrode
7. Ignition Electrodes
8. Diverter Valve
9. Low Water Pressure Switch
10. Drain Valve
11. Domestic Hot Water NTC
12. Secondary Heat Exchanger
13. Gas Valve
14. D.H.W. Flow Switch
15. D.H.W. Inlet Filter
16. Automatic By-pass
17. Safety Valve
18. Pressure Gauge
19. Circulation Pump with Automatic Air Release Valve
20. Central Heating Return NTC
21. Expansion Vessel
22. Air Pressure Switch

A. Central Heating Flow
B. Domestic Hot Water Outlet
C. Gas Inlet
D. Domestic Cold Water Inlet
E. Central Heating Return

3. COMMISSIONING

3.1 INITIAL PREPARATION

MTS (GB) Limited support the benchmark initiative. Within the information pack you will find a copy of the benchmark logbook. It is important that this is completed in the presence of your customer, they are shown how to use it, and it is signed by them. Please instruct your customer that they must have their benchmark logbook with them whenever they contact a service engineer or us.

Preliminary electrical system checks to ensure electrical safety must be carried out by a competent person i.e. polarity, earth continuity, resistance to earth and short circuit.

FILLING THE HEATING SYSTEM:

Lower the control panel and remove the case panels (see **SECTION 2.12** for further information).
Open the central heating flow and return cocks supplied with the connection kit.
Unscrew the cap on the automatic air release valve one full turn and leave open permanently.
Close all air release valves on the central heating system.
Gradually open valve(s) at the filling point (filling-loop) connection to the central heating system until water is heard to flow, do not open fully.
Open each air release tap starting with the lowest point and close them only when clear water, free of air, is visible.

Purge the air from the pump by unscrewing the pump plug anticlockwise, also manually rotate the pump shaft in the direction indicated by the pump label to ensure the pump is free.

Refit the pump plug.
Continue filling the system until at least 1.5 bar registers on the pressure gauge.
Inspect the system for water soundness and remedy any leaks discovered.

FILLING OF THE D.H.W. SYSTEM:

Close all hot water draw-off taps.
Open the cold water inlet cock supplied with the connection kit.
Open slowly each draw-off tap and close them only when clear water, free of bubbles, is visible.

GAS SUPPLY:

Inspect the entire installation including the gas meter and test for soundness. The entire installation should be in accordance with the relevant standards. In GB this is BS 6891 and in IE this is the current edition of I.S.813.

The connection to the appliance is a 15mm copper tail located at the rear of the gas service cock (**FIG. 2.5**).

If the gas supply serves other appliances, ensure that an adequate supply is available both to the boiler and the other appliances when they are in use at the same time.

Pipework must be of an adequate size. Pipes of less than 22mm should not be used.

Open the gas cock (supplied with the connection kit) to the appliance and check the gas connection on the appliance for leaks.

When the installation and filling are completed, flush the system while cold, refill, turn on the Central Heating system (**SECTION 3.2**) and run it until the temperature has reached the boiler operating temperature. The system must then be immediately flushed through.
The flushing procedure must be in line with BS 7593:1992 code of practice for treatment of water in domestic hot water central heating systems.
During this operation, we highly recommend the use of a central heating flushing detergent (Fernox Superfloc or equivalent), whose function is to dissolve any foreign matter that may be in the boiler and system following the flushing procedure.
Substances different from these could create serious problems to the pump or other components.
The use of an inhibitor in the system such as Fernox MB-1 or equivalent is strongly recommended to prevent corrosion (*sludge*) damaging the boiler and system.
Failure to carry out this procedure may invalidate the appliance warranty.

3.2 Initial Start-up

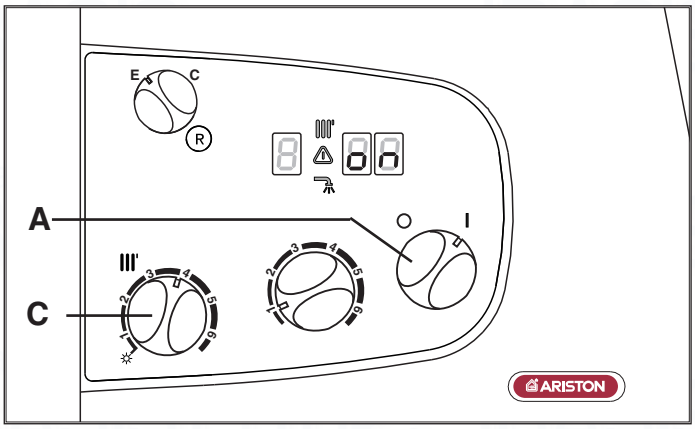

Fig. 2.27

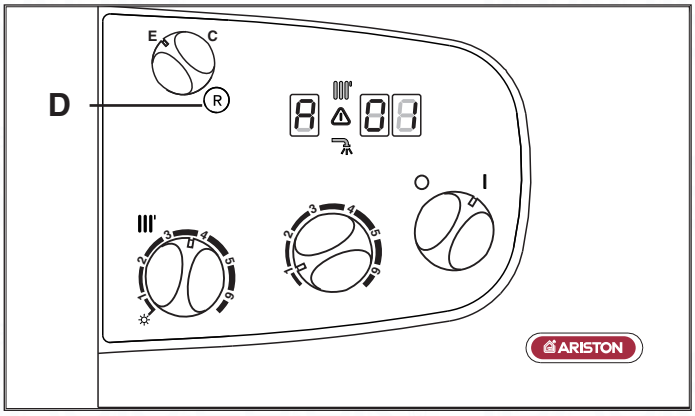

Fig. 2.28

The checks to be run before initial start-up are as follows:

1. Make sure that:
   - the screw on the automatic air valve has been loosened when the system is full;
   - If the water pressure in the system is below 1.5 bar, bring it up to the appropriate level;
   - Ensure that the gas cock is closed;
   - Make sure that the electrical connection has been made properly and that the earth wire is connected to an efficient earthing system;
   - Supply power to the boiler by turning the On/Off knob **"A"** (see **Fig. 2.27**) - "on" will appear on the display. Turn the knob "C" to maximum and switch the time clock to constant and turn up the room stat where fitted.
     After 7 seconds, the boiler will signal a shutdown due to ignition failure. Leave the boiler as it is until all of the air has been bled from the system.
   - Loosen the cap on the head of the pump to eliminate any air pockets;
   - Repeat the procedure for bleeding the radiators of air;
   - Open the hot water taps for a brief period;
   - Check the system pressure and, if it has dropped, open the filling loop again to bring the pressure back up to 1.5 bar.
2. Make sure that all radiator valves are open;
3. Turn on the gas cock and check the seals on the connections with an approved soap solution and eliminate any leaks.
4. Press the reset button **"D"** (see **Fig. 2.28**) the boiler will re-attempt ignition. If the burner does not light the first time, wait 1 minute and repeat the procedure.
5. Check the minimum and maximum burner pressure values; adjust if necessary using the values indicated in the table in **Section 4 (Page 27)**.

3.3 Operational Adjustments

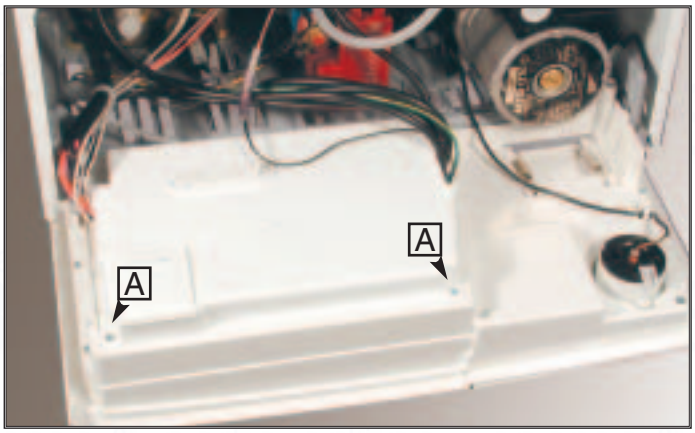

To access the areas in which adjustments are made, it is necessary to open the control panel, as indicated in **Section 2.12**, then remove the rear inspection cover by unscrewing the two screws **"A"**. Access is thereby provided to the P.C.B. and to the following components:

1. The power supply cable connector;
2. The fuses;
3. The soft-light potentiometer the setting for which can range from the minimum thermal power to the maximum;
4. The maximum thermal heating power potentiometer adjustable by the minimum to maximum power (already calibrated in the factory to 70% of the maximum thermal power);
5. The jumper for adjusting the ignition delay (anti-cycling) feature, which can be set from 0 to 2 minutes (set in the factory at one minute);
6. Fan/Pump Over-run (Electrical Diagram). When the jumper is set to position A the Fan and Pump over-run is activated. (The jumper is factory set in position B)
7. The time clock connector (see pae 20).

3.4 Combustion Analysis

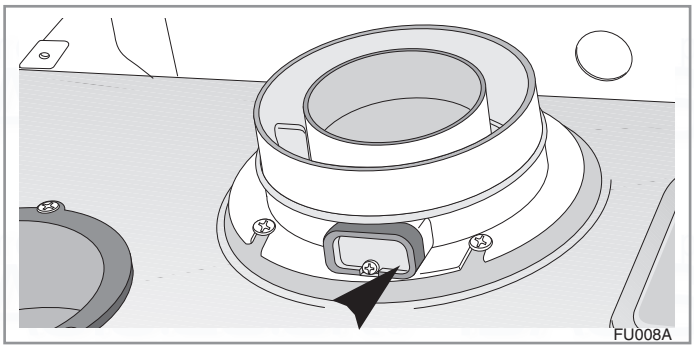

The flue connector has two apertures, readings can be taken for the temperature of the combustion by-products and of the combustion air, as well as of the concentrations of O_2 and CO_2, etc.
To access these intakes it is necessary to unscrew the front screw and remove the metal plate with sealing gasket.
It is possible to activate the flue test mode (maximum output) by pressing and holding the RESET button **"D"** for 10 seconds, **" SC"** will be shown on the display. The boiler will return to normal operation after 5 minutes. The boiler can be returned to normal operation sooner by switching the boiler off and on again.

3.5 Product of Combustion Discharge Monitoring

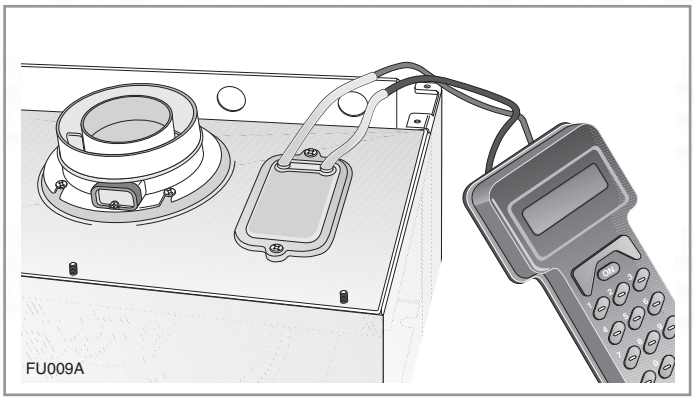

In the boiler, it is possible to monitor the correct operation of the flue exhaust/air intake, checking for a loss of general pressure in the system. Through the use of a differential manometer connected to the test points of the combustion chamber, it is possible to detect the ΔP of operation of the air pressure switch.
The value detected should not be less than 0.90 mbar (31 kW) under conditions of maximum thermal power in order for the boiler to function properly and without interruption.

3.6 Boiler Safety Systems

WARNING!
The boiler is still powered.

The boiler is protected from malfunctioning by means of internal checks by the P.C.B., which brings the boiler to a stop if necessary.

There are two types of shut-off:
- ***SHUTDOWN*** (A)
- ***SAFETY SHUTDOWN*** (E)

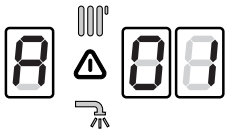

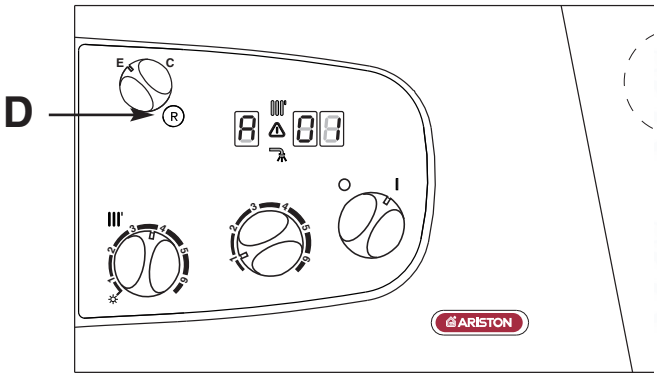

SHUTDOWN **" A "**
This type of appliance shutdown is called "volatile", and is indicated on the display by a number preceded by the letter (A), and by the symbol ⚠ **G Fig. 2.22** Page 18), as illustrated in the table below:

Important
If this shutdown occurs frequently, contact an authorised Service Centre for assistance. For safety reasons, the boiler will allow a **maximum of 5 reset operations to take place in 15 minutes** (pressing the RESET button).
If the shutdown is occasional or an isolated event, this is not necessarily a problem.

DISPLAY	CAUSE
A01	No flame after safety time (7 seconds)
A03	The heating flow temperature exceeds 103°C during operation
A97	Problem with the electronic monitoring
A98	Problem with the electronic monitoring
A99	Problem with the electronic monitoring

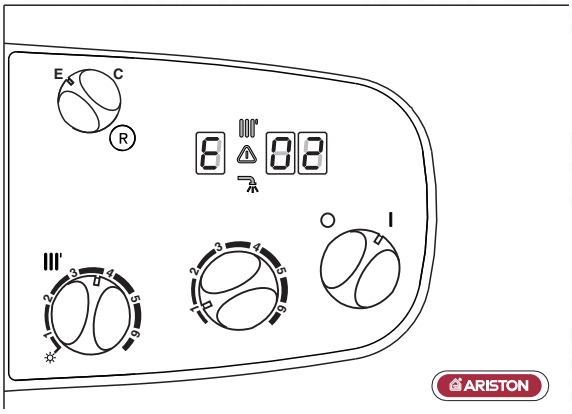

SAFETY SHUTDOWN *" E"*

In the event of a safety cut-off (displayed with the code shown in the table), the boiler will automatically try to reset itself and relight. Should this not be the case, contact an authorised Service Centre for assistance.

DISPLAY	CAUSE
E02	Insufficient water pressure
E04	Domestic hot water temperature probe in open circuit
E05	Domestic hot water temperature probe short circuited
E06	Heating flow temperature probe in open circuit
E07	Heating flow temperature probe short circuited
E08	Heating return temperature probe in open circuit
E09	Heating return temperature probe short circuited
E20	Flame detected with gas valve closed
E21	Error in the electrical connection (live and neutral crossed)
E33	The air pressure switch is closed before the ignition sequence
E34	The air pressure switch does not close when the fan runs
E99	More than 5 RESETS of the boiler in 15 minutes.

ANTI-FROST DEVICE:

The boiler is fitted with a device which, in the event that the water temperature falls below 3˚C, the burner ignites at the minimum power until the boiler reaches a temperature of approximately 33˚C in the heating circuit.

This device only operates if the boiler is functioning perfectly and:

- the system pressure is sufficient;
- the boiler is powered electrically;
- the gas is turned on.

PUMP / DIVERTER VALVE PROTECTION:

To prevent the pump and diverter valve from siezing the boiler will activate the pump for 20 seconds every 21 hours after it's last operation and activate the diverter valve.

3.7 Draining the System

Draining the Heating System

The heating system must be drained as follows:

- Turn off the boiler;
- Attach a hose pipe and open the drain valve;
- Drain the system at the lowest points (where present). When the heating system is unused for an extended period of time, it is recommended that you add antifreeze with an ethylene glycol base to the water in the heating pipe work and radiators if the ambient temperature drops below 0°C during the winter.
  This makes repeated draining of the entire system unnecessary.

Draining the Domestic Hot Water System

Whenever there is the danger of the temperature dropping below the freezing point, the domestic hot water system must be drained as follows:

- Turn off the general water valve for the household plumbing system;
- Turn on all the hot water taps;
- Empty the remaining water from the lowest points in the system (where present).

3.8 Completion

For the Republic of Ireland it is necessary to complete a "Declaration of Conformity" to indicate compliance to I.S. 813. An example of this is given in the current edtion of I.S. 813. In addition it is necessary to complete the benchmark Log Book.

3.9 Operational Checks

1. The flue system must be visibly checked for soundness.

2. On Central Heating allow the system to warm up and adjust the Central Heating temperature control knob, check the burner modulates up and down between the high and low settings.

3. Range rate the thermal power for Central Heating, as detailed in **Section 4.2,** Page 29.

4. Run the Domestic Hot Water and adjust to the correct water flow rate, adjust the Domestic Hot Water temperature control knob to check the burner modulates up and down between the high and low settings.

5. Balance the Central Heating system until all return temperatures are correct and equal.

6. Turn the ON/OFF button OFF, disconnect the pressure Gauge, retighten screw and relight boiler.

7. Re-examine Central Heating, Domestic Hot Water and Cold Water supplies for soundness.

8. Check the appearance of the gas flame to assess the adequacy of the combustion air supply.

9. If external controls have been disconnected, reconnect and test.

10. Refit boiler casing.

3.10 Instructing The End User

1. Hand over the copy of the End User Instructions supplied with the appliance, together with these instructions, and explain how to use the timeclock and room thermostat.

2. Show the End User how to switch the appliance off quickly, and indicate the position of the electric supply isolator.

3. Inform the End User of the location of all drains, isolating valves and air vents.

4. Explain how to turn the appliance off for both short and long periods and advise on the precautions necessary to prevent damage in the event that the appliance is inoperative when freezing conditions occur.

5. Instruct the End User on the correct procedure for checking and refilling the boiler.

6. Finally advise the End User that, for continued safe and efficient operation, the appliance must be serviced by a competent person at least once a year.

4. GAS ADJUSTMENTS

TABLE A

CATEGORY II2H3+		Methane Gas G20	Liquid Butane Gas G30	Liquid Propane Gas G31
Lower Wobbe Index (15°C;1013mbar)	MJ/m³h	45.67	80.58	80.58
Nominal Delivery Pressure	mbar	20	29	37
microGenus II 24 MFFI				
Main Burner: n. 14 jets (ø)	mm	1.25	0.72	0.72
Consumption (15°C; 1013mbar) max - min	m³/h	2.80 - 1.16	---	---
Consumption (15°C; 1013mbar) max - min	Kg/h	---	2.09 - 0.87	2.06 - 0.85
Gas Burner Pressure max - min	mbar	10.3 - 2.0	28.1 - 5.0	35.6 - 6.8
microGenus II 28 MFFI				
Main Burner: n. 14 jets (ø)	mm	1.30	0.77	0.77
Consumption (15°C; 1013mbar) max - min	m³/h	3.15 - 1.27	---	---
Consumption (15°C; 1013mbar) max - min	Kg/h	---	2.35 - 0.95	2.31 - 0.93
Gas Burner Pressure max - min	mbar	10.8 - 2.0	28.0 - 5.0	36.0 - 6.0
microGenus II 31 MFFI				
Main Burner: n. 14 jets (ø)	mm	1.35	0.80	0.80
Consumption (15°C; 1013mbar) max - min	m³/h	3.54 - 1.48	---	---
Consumption (15°C; 1013mbar) max - min	Kg/h	---	2.64 - 1.10	2.60 - 1.09
Gas Burner Pressure max - min	mbar	11.5 - 2.1	26.8 - 5.3	34 - 6.5

4.1 CHANGING THE TYPE OF GAS

The boiler can be converted to use either methane (natural) gas (G20) or L.P.G. (G30 - G31) by an Authorised Service Centre.

The operations that must be performed are the following:

1. Replace the jets on the main burner **(see table in section 4)**;
2. Adjust the maximum and minimum thermal capacity values for the boiler **(see table in section 4 and 4.2 Adjusting the Gas Pressures)**;
3. Adjust the maximum thermal power setting **(see tables in section 4.3 and FIG. 4.1)**;
4. Adjust the soft-light feature **(see table below for recommended pressure and Fig. 4.1)**;
5. Adjust the ignition delay feature for the heating system by adjusting the Jumper as indicated in Section 2.14 **(FIG. 2.23).** It can be set from 0 to 2 mins.).

RECOMMENDED SOFT LIGHT PRESSURES

CATEGORY II2H3+	Methane Gas G20	Liquid Butane Gas G30	Liquid Propane Gas G31
Recommended Soft-light Pressure (mbar)			
24 kW	5.0	12.0	12.0
28 kW	5.0	12.0	12.0
31 kW	4.5	12.0	12.0

4.2 Adjusting the Gas Pressures

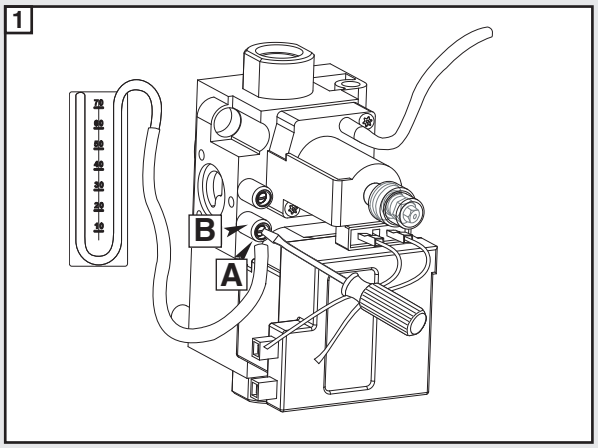

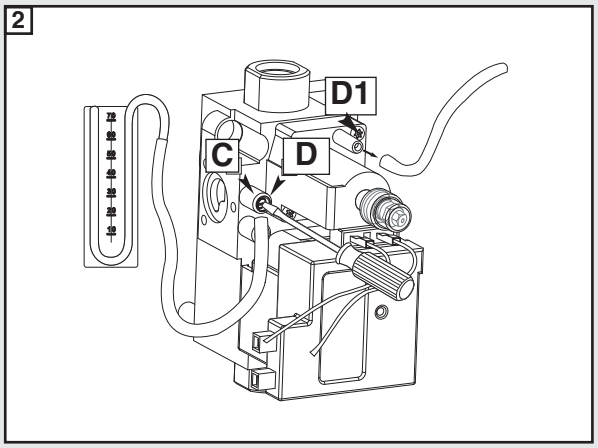

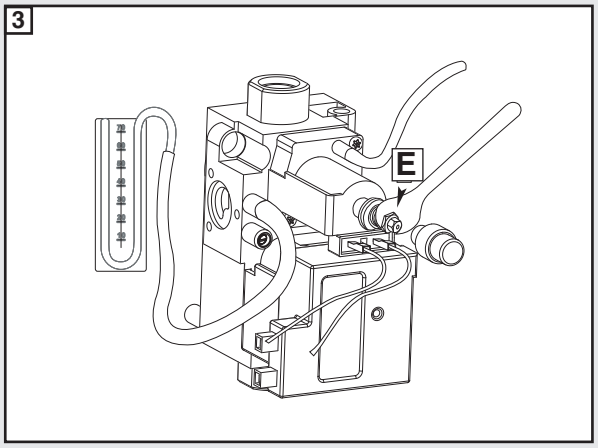

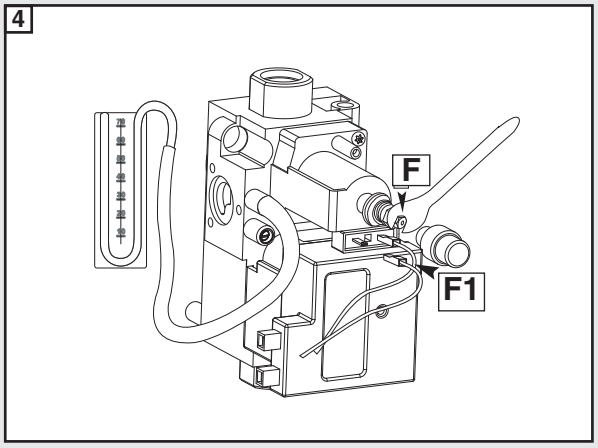

Setting the minimum and the maximum power of the boiler

1. Check that the supply pressure and dynamic working pressure to the gas valve is a minimum of 20 mbar for natural gas.
2. To do this, loosen the screw **"A"**.
   Fit the pipe of the pressure gauge to the inlet pressure connection of the gas valve **"B"** and check for the correct standing pressure, then operate the appliance and check for the correct working pressure.
   When you have completed this operation, replace the screw **"A"** securely into its housing to seal off the gas (check for tightness).
3. To check the pressure supplied by the gas valve to the burner, loosen the screw **"C"**. Fit the pipe of the pressure gauge to the pressure outlet test point of the gas valve **"D"**.
   Disconnect the compensation pipe **"D1"** either from the gas valve or from the sealed chamber.
4. Turn the On/Off knob to "ON" position -*green light*- and ensure that the hot water temperature control knob is set to maximum.
   Turn on the boiler by running a hot water tap.
   Adjust the 10mm nut **"E"** on the modureg to set the maximum gas pressure, turn the nut clockwise to increase and anti clockwise to decrease the pressure until the required pressure is achieved (see **Table A** Page 27).
5. To set the minimum power, disconnect a supply terminal **"F1"** from the modureg and adjust screw **"F"** (ensure that the 10mm nut is held in position). Turn the screw clockwise to increase the pressure and anti-clockwise to decrease the pressure (displayed on the pressure gauge) corresponding to the minimum power (see **Table A** Page 27).
6. When you have completed the above operations, turn off the hot water tap, reconnect the supply terminal to the modureg on the gas valve, reconnect the compensation pipe and replace the cap on the screw of the modureg.

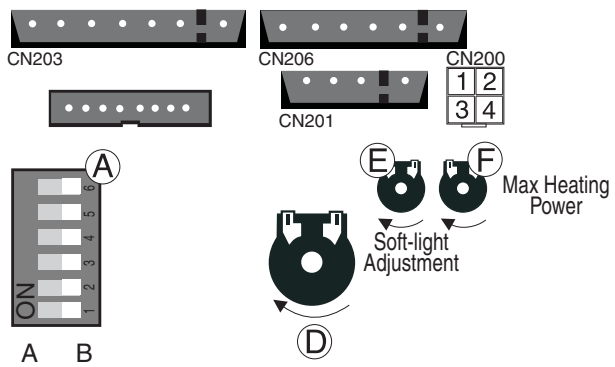

Setting the maximum heating circuit power

7. To set the maximum heating circuit power, turn the On/Off knob to the “ON” position and set the time clock and any external controls to the “ON” position. Turn the knob of the heating thermostat clockwise to maximum.

8. Remove the inspection panel of the P.C.B. and fit a small cross-head screwdriver in to the right hand potentiometer (see below). Turn clockwise to increase the pressure or anti-clockwise to reduce the pressure. Adjust the setting to the required heating pressure value (displayed on the pressure gauge), as indicated in the charts shown on Page 31.

9. Turn off the boiler by placing the main switch to the "OFF" position.

Setting the pressure for soft-light ignition.

Disconnect the detection electrode connection close to the P.C.B. **(Section 6.3.3)**.

Start the boiler and during the ignition sequence adjust the left hand potentiometer until the gas pressure reads the required gas pressure **(see the table on page 27)**.

Once the gas pressure is set turn off the boiler and re-connect the detection electrode to the P.C.B.

NB.: It may be necessary to reset the flame failure reset a number of times during this operation.

10. Remove the pipe from the test point and tighten the screw “**C**” to the pressure test point in order to seal off the gas.

11. Carefully check the pressure test points for gas leaks (both inlet and outlet).

IMPORTANT!
Whenever you disassemble and reassemble the gas connections, always check for leaks using a leak detection fluid.

microGENUS II 24 MFFI

NATURAL GAS (G20)										
kW	10	12	14	16	18	20	22	24		
mbar	2.5	3	3.75	4.75	5.75	7	8	10		
LIQUID GAS (G30)										
kW	10	12	14	16	18	20	22	24		
mbar	5.5	8	10	12.5	15.5	18.5	22	26		
LIQUID GAS (G31)										
kW	10	12	14	16	18	20	22	24		
mbar	7	9	12	15.5	19	24	28	34		

microGENUS II 28 MFFI

NATURAL GAS (G20)										
kW	11	13	15	17	19	21	23	25	27	
mbar	2	2.75	3.5	4.5	5	6	7	8.5	10	
LIQUID GAS (G30)										
kW	11	13	15	17	19	21	23	25	27	
mbar	5	6.5	8.5	10.5	13	15.5	18.5	21	25	
LIQUID GAS (G31)										
kW	11	13	15	17	19	21	23	25	27	
mbar	6.5	8	10	12	14.5	17.5	21	25.5	31	

microGENUS II 31 MFFI

NATURAL GAS (G20)										
kW	13	15	17	19	21	23	25	27	29	31
mbar	2.5	3	3.5	4.5	5.5	6.5	7.5	8.5	10	11.5
LIQUID GAS (G30)										
kW	13	15	17	19	21	23	25	27	29	31
mbar	5	7	8	10	12	14	17	20	23	27
LIQUID GAS (G31)										
kW	13	15	17	19	21	23	25	27	29	31
mbar	7	9	11	13	15	18	21	24	28	34

NOTE: THIS TABLE CAN BE USED IN CONJUNCTION WITH THE GRAPH ON PAGE 31.

FIG. 4.1

Regulating the heating power for natural gas (G20)

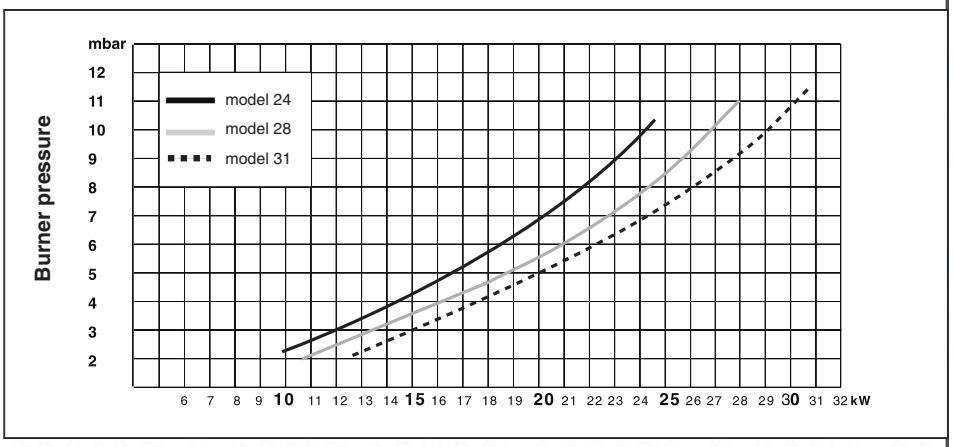

Regulating the heating power for butane gas (G30)

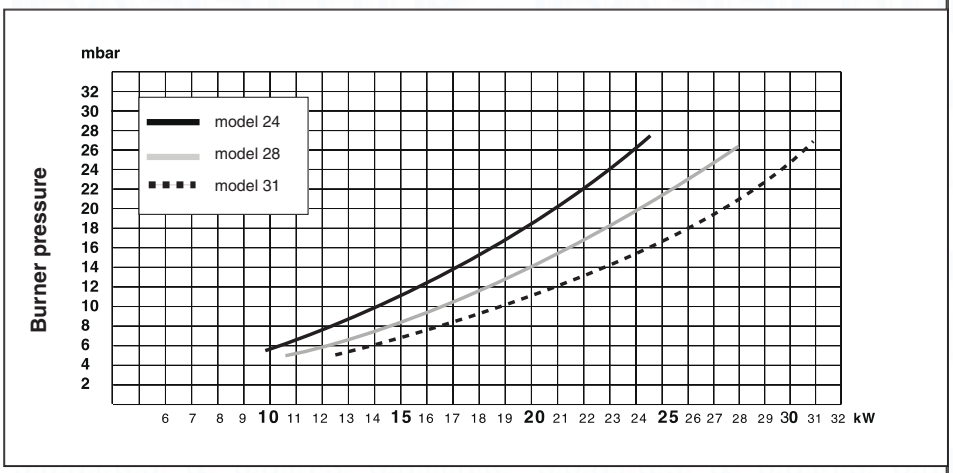

Regulating the heating power for propane gas (G31)

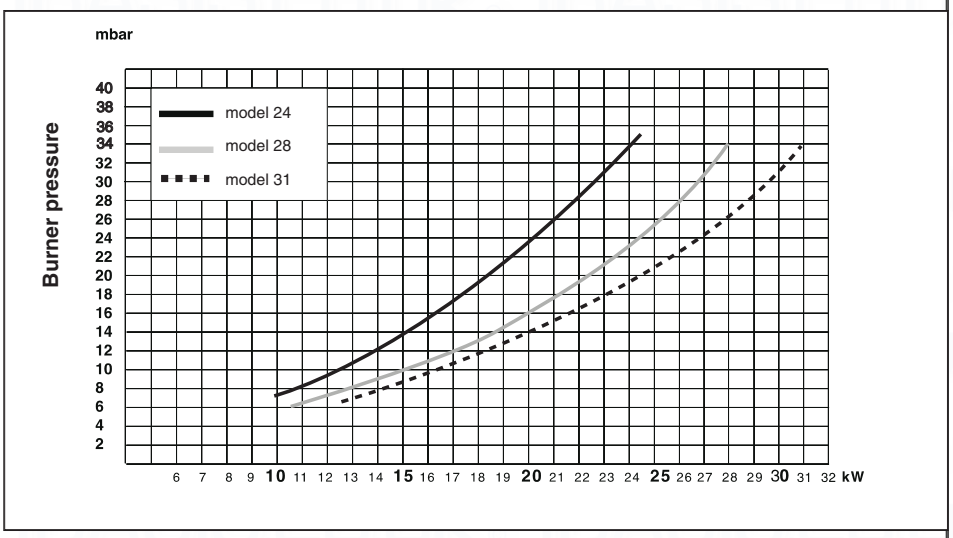

5. MAINTENANCE

It is recommended that the following inspections be carried out on the boiler at least once a year:

1 - Check the seals for the water connections; replace any faulty seals.
2 - Check the gas seals; replace any faulty gas seals.
3 - Visual check of the entire unit.
4 - Visual check of the combustion process or analysis of combustion by-products (see **Section 3.4**) and cleaning of the burner if needed.
5 - If necessary, dismantling and cleaning of the combustion chamber.
6 - If necessary, dismantling and cleaning of the burner jets.
7 - Visual check of the primary heat exchanger:
  - check for overheating in the blade assembly;
  - clean the exhaust fan if needed.
8 - Adjustment of the gas pressure, gas rate and soft-light, partial load and full load.
9 - Check of the heating safety systems:
  - safety device for maximum temperature (overheat thermostat);
  - safety device for maximum pressure (safety valve).
10- Check of the gas safety systems:
  - safety device for lack of gas or flame ionisation (detection electrode).
11- Check of the electrical connection (ensure it complies with the instructions in the manual).
12- Check of Domestic Hot Water production efficiency (flow rate and temperature)
13- General check of the combustion by-products of the discharge/ventilation system.
14- Check of the general performance of the unit.

Note: These checks are not exhaustive

spares & parts online IBASIS.CO.UK

6. SERVICING INSTRUCTIONS

To ensure efficient safe operation, it is recommended that the boiler is serviced annually by a competent person.

Before starting any servicing work, ensure both the gas and electrical supplies to the boiler are isolated and the boiler is cool.
Before and after servicing, a combustion analysis should be made via the flue sampling point (please refer to **Section 3.4** for further details).

After servicing, preliminary electrical system checks must be carried out to ensure electrical safety (i.e. polarity, earth continuity, resistance to earth and short circuit).

6.1 Replacement of Parts

The life of individual components vary and they will need servicing or replacing as and when faults develop.
The fault finding sequence chart in **Section 7** will help to locate which component is the cause of any malfunction, and instructions for removal, inspection and replacement of the individual parts are given in the following pages.

6.2 To Gain General Access

All testing and maintenance operations on the boiler require the control panel to be lowered. This will also require the removal of the casing.

6.2.1 Removing the front panel

1. Loosen the fastening screws “A” of the control panel located on the lower part of the panel itself. (Fig. 6.1);

Fig. 6.1

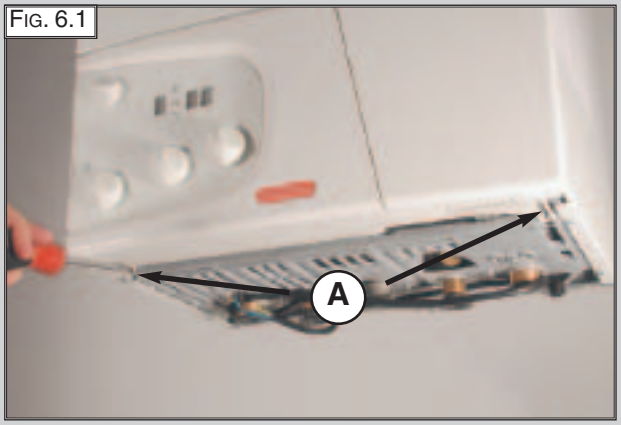

Fig. 6.2

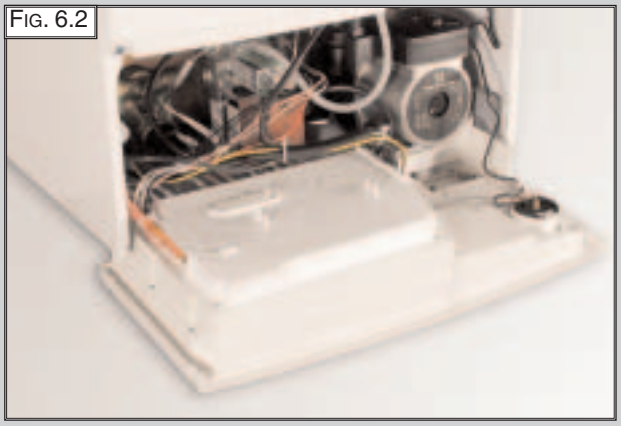

2. The control rotates on two lateral hinges; the panel stays in a horizontal position, which allows access to the inner parts of the boiler (Fig. 6.2);
3. Remove the screws “B” from the front panel bottom lip (Fig. 6.3);
4. Lift the front panel up and forward from the raised screws at the the top of the casing (Fig. 6.4).

Fig. 6.3

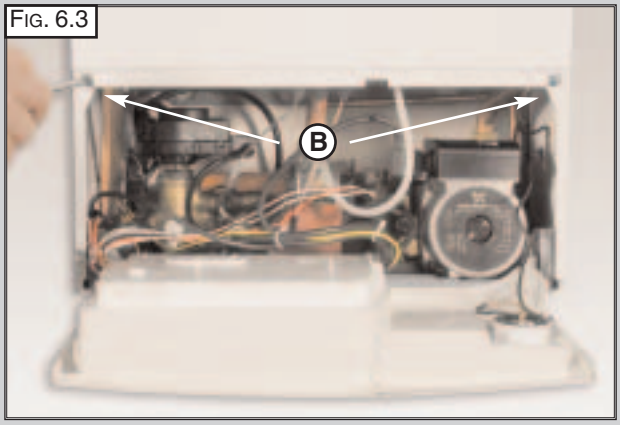

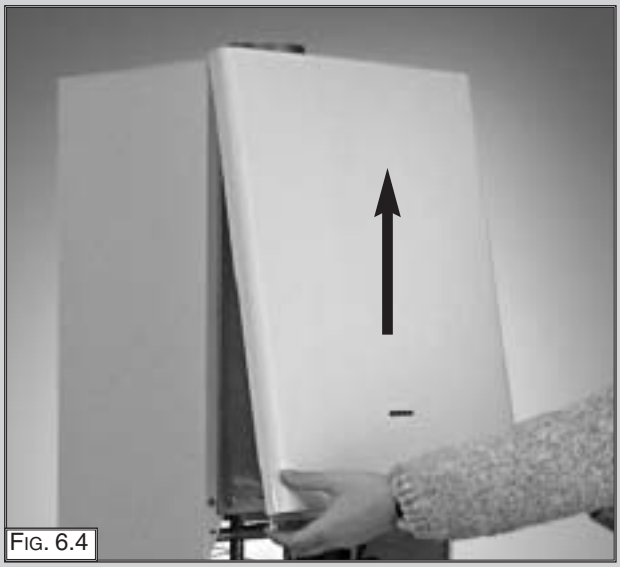

Fig. 6.4

6.2.2 Removing the sealed chamber front cover

1. Remove the screws “C” (FIG. 6.5);
2. Lift the sealed chamber front cover from the locating pins (FIG. 6.6).

FIG. 6.5

FIG. 6.6

6.2.3 Removing the side panels

1. Remove the four screws “D” for each side panel (FIG.6.7);
2. Pull the panel away from the boiler at the base, then lift the panel up and remove from the boiler (FIG.6.8).

FIG. 6.7
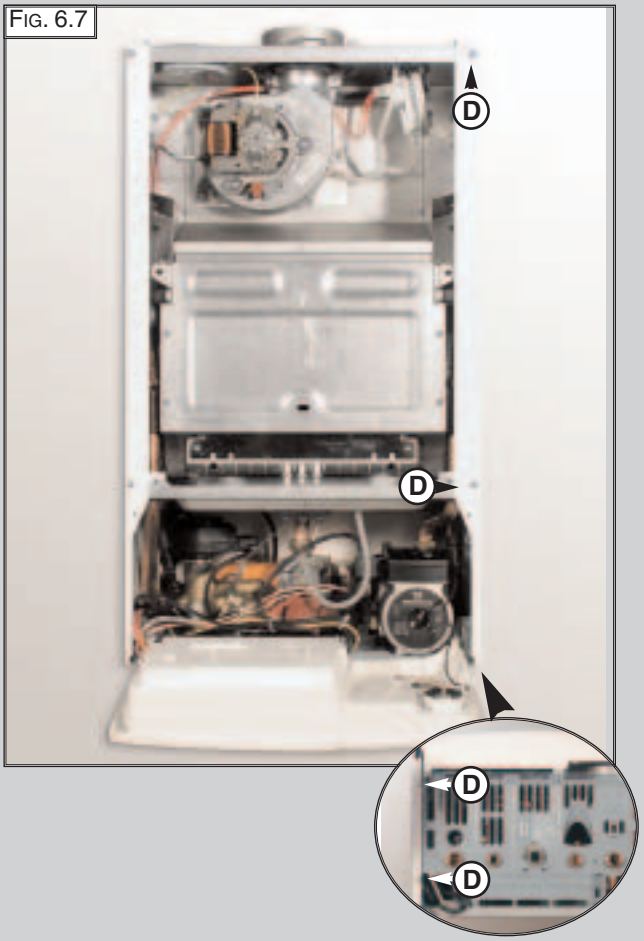

FIG. 6.8
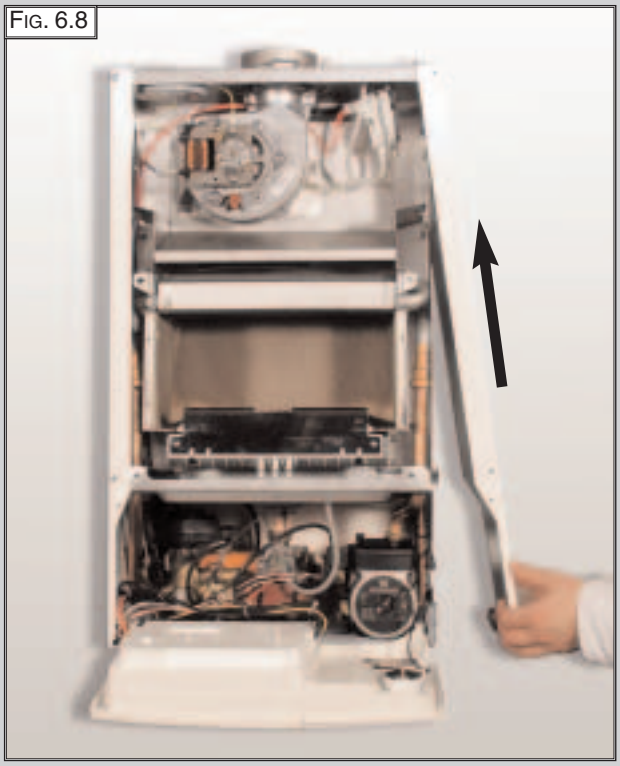

6.3 Access to the Combustion Chamber

6.3.1 Removing the combustion cover

1. Remove the screws “E” (Fig. 6.9);
2. Lift off the combustion cover.

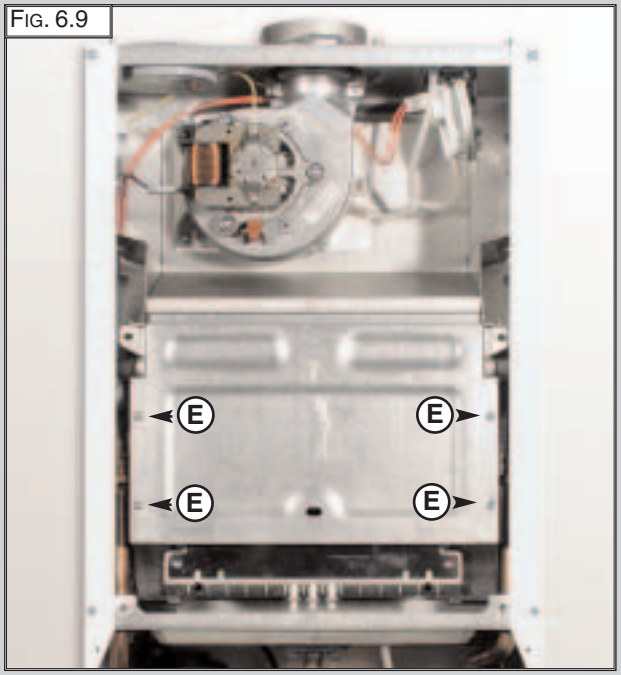

Fig. 6.9

6.3.2 Removing the burner and jets

1. Remove the screws “F” from the burner (Fig. 6.10);
2. Remove the burner (Fig. 6.11);
3. Disconnect the electrodes (*see* **section** 6.3.3);
4. Remove the jets using a No. 7 socket spanner;
5. Replace in reverse order.

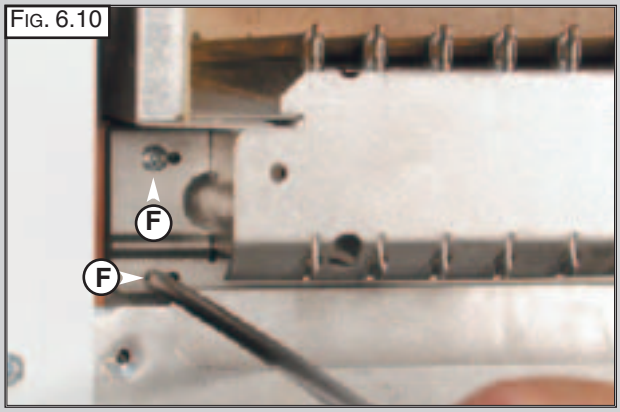

Fig. 6.10

Fig. 6.11

6.3.3 Removing the electrodes

Before carrying out this procedure, unscrew and slide the burner forward (see previous section).
1. Remove rubber gasket “G” (Fig. 6.12);
2. To remove the detection electrode disconnect the cable at its connection point close to the P.C.B. (Fig. 6.13);
3. Remove screw “H” (Fig. 6.14);
4. Gently slide the electrode downward (Fig. 6.15).

Fig. 6.12

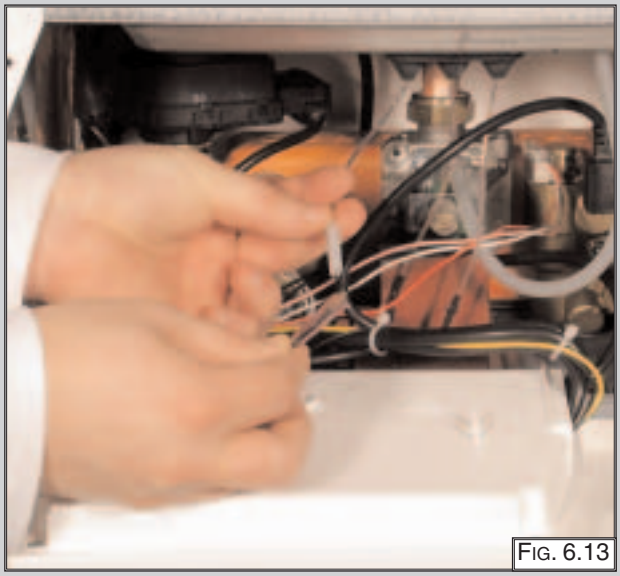
Fig. 6.13

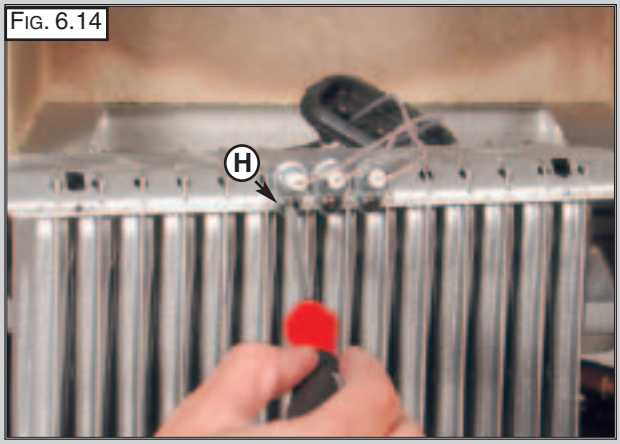

Fig. 6.14

Fig. 6.15

To replace, repeat the steps in reverse order, paying particular attention to the following:

a - Centre the electrode in the positioning hole carefully, otherwise the electrode may break;

b - Ensure that the left hand and right hand electrodes are located the correct way round (facing each other), to give the correct spark gap;

c - Check that the cables have been connected correctly;

d - Check that the rubber gasket seals the cable/ electrode connection point completely.

6.3.4 Removing the main heat exchanger

1. Drain the boiler of water;
2. Remove the side panels (see 6.2.3)
3. Remove the overheat thermostat sensor "I" (Fig. 6.16);
4. Remove the clips "J" (Fig. 6.16);
5. Release the connection nut "K" (Fig. 6.17);
6. Release the connection nut "L" (Fig. 6.18);
7. Pull down the pipe (Fig. 6.19);
4. Pull the exchanger out (Fig. 6.20).

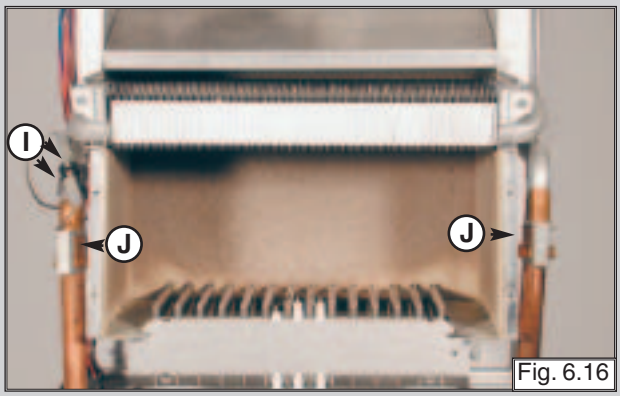

Fig. 6.16

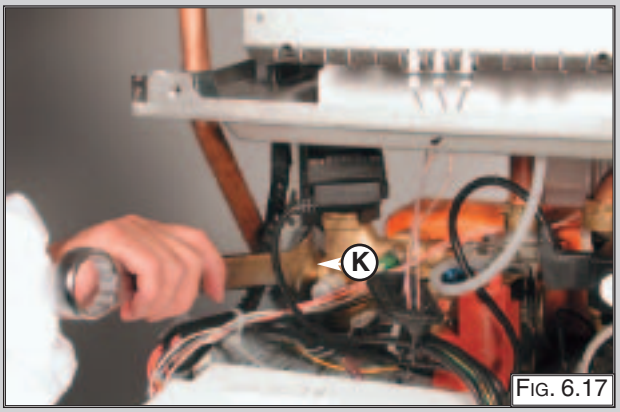

Fig. 6.17

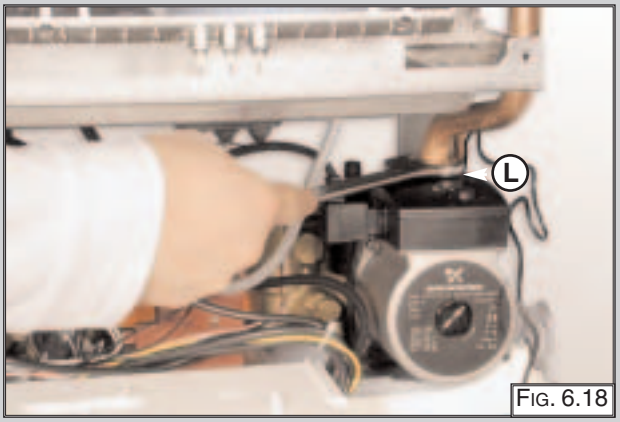

Fig. 6.18

Fig. 6.19

Fig. 6.20

6.3.5 Removing the air pressure switch

1. Disconnect the electrical connections “M” and silicone pipes “N” from their connection points (Fig. 6.21);
2. Remove screws “O” on the top of the sealed chamber (Fig. 6.22);
3. Lift out the air pressure switch (Fig. 6.23);
4. Unscrew to remove the switch from the plate.

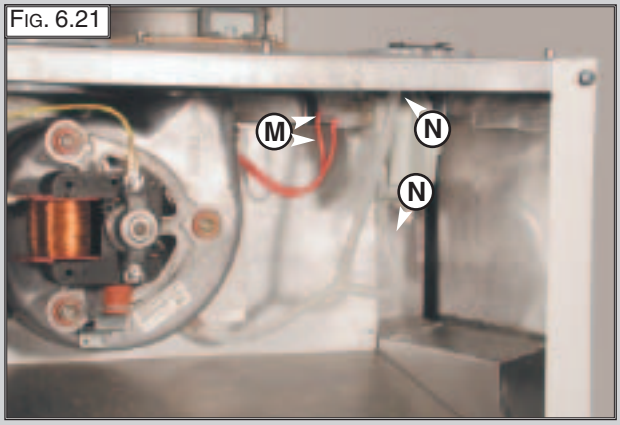

Fig. 6.21

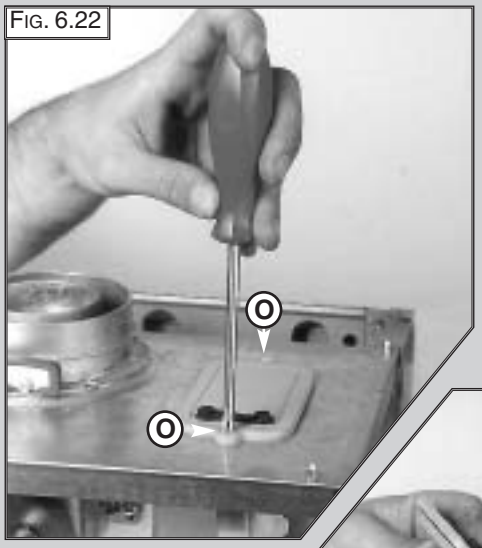

Fig. 6.22

Fig. 6.23

6.3.6 Removing the fan

1. Disconnect electrical connections “P” and silicone pipe “Q” (FIG.6.24);
2. Remove screw “R” and remove the fan collar clamp “R” (FIG.6.25);
3. Remove screws “S” (FIG.6.26);
4. Remove fan and mounting plate (FIG.6.27).

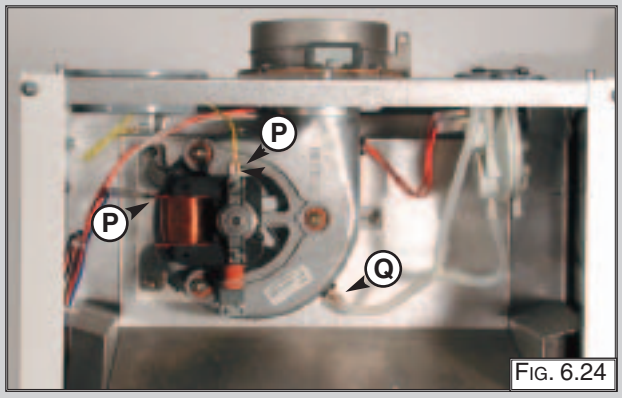

FIG. 6.24

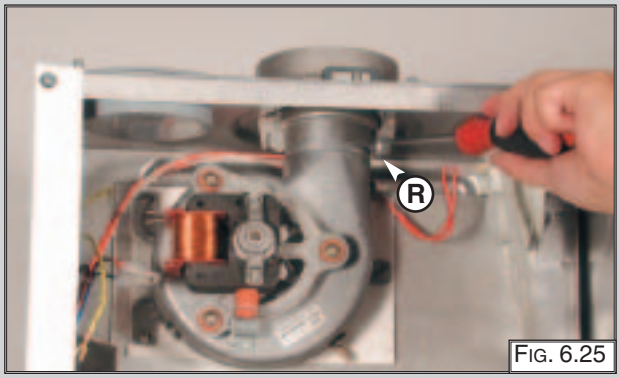

FIG. 6.25

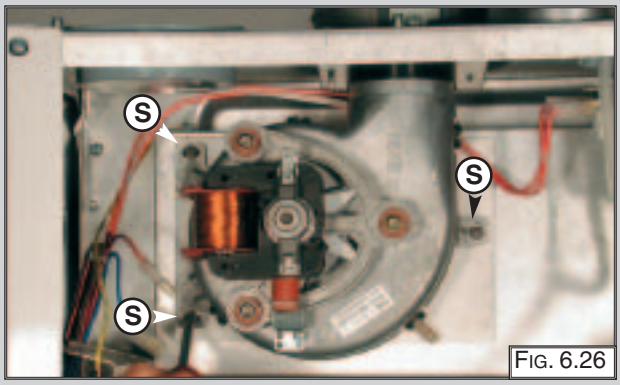

FIG. 6.26

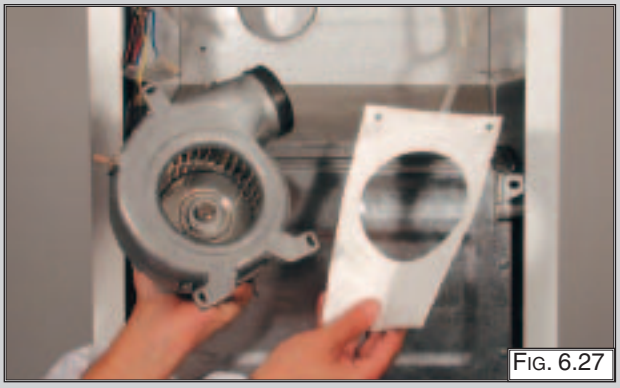
FIG. 6.27

6.4 ACCESS TO THE GAS VALVE

6.4.1. Removing the spark generator (HONEYWELL Gas Valve)

1. Disconnect ignition leads “T” by pulling upward (FIG. 6.28);
2. Remove the screw “U” (FIG. 6.29);
3. Remove the spark generator by pulling forward from the gas valve (FIG. 6.30).

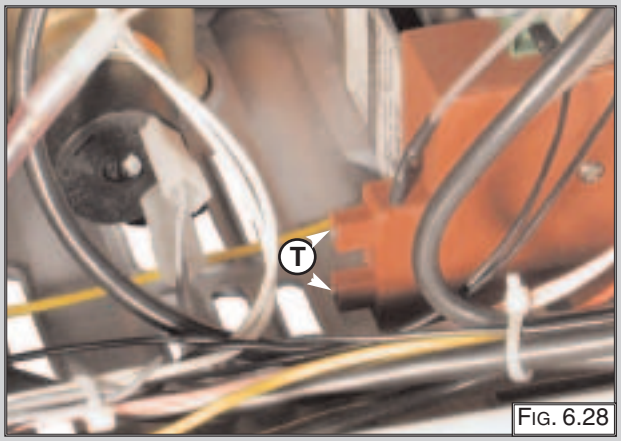

FIG. 6.28

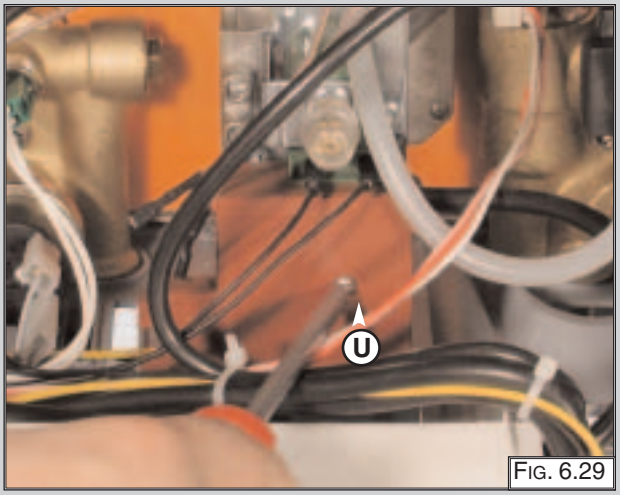

FIG. 6.29

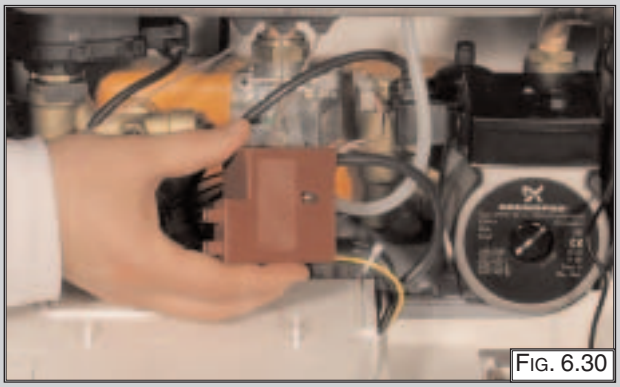
FIG. 6.30

6.4.2 Removing the gas valve (Honeywell)

Important! Before removing the gas valve, ensure the gas supply is turned off.

1. Disconnect all the cables from the solenoid and modureg;
2. Remove the spark generator (see previous section);
3. Release the nuts "V" (Fig. 6.31);
4. Remove the screws "W" from the bottom of the gas valve (Fig. 6.32);
5. Remove the gas valve (Fig. 6.33).

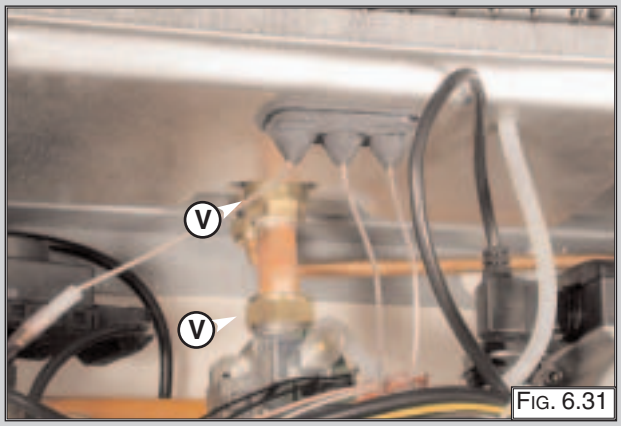

Fig. 6.31

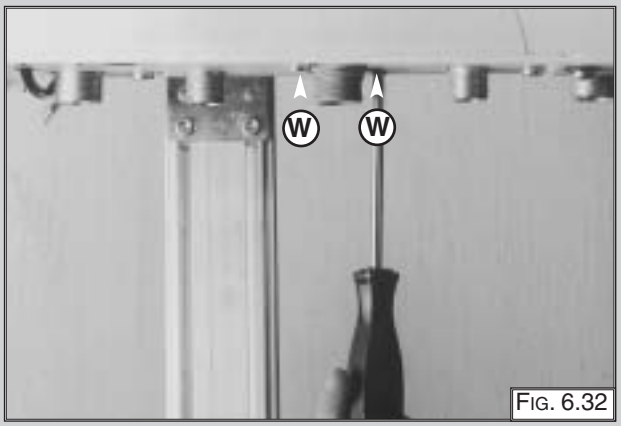

Fig. 6.32

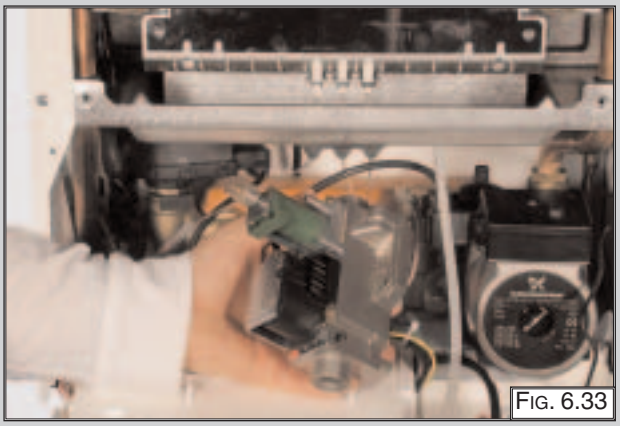
Fig. 6.33

6.5 Access to the Water Circuit

Important! Before any component is removed, the boiler must be drained of all water.

6.5.1 Removing the D.H.W. (secondary) exchanger

1. Remove the screws "X" (Fig 6.34);
2. Disconnect the cable "Y" (Fig 6.35);
3. Push the insulation of the exchanger towards the rear of the boiler, and lift upwards and remove from the front of the boiler (Fig 6.36);
4. Push the exchanger towards the rear of the boiler, and lift upwards and remove out of the front of the boiler (Fig 6.37);
5. Before replacing the exchanger ensure that the O-rings are in good condition and replace if necessary.

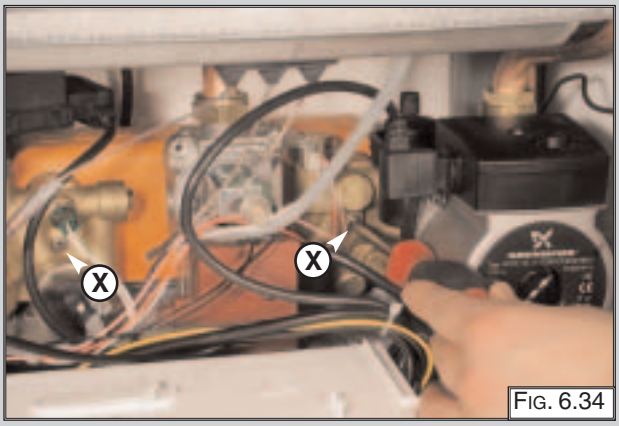

Fig. 6.34

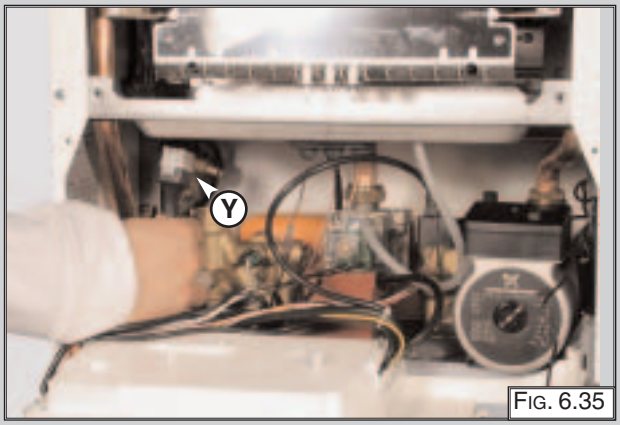

Fig. 6.35

Fig. 6.36

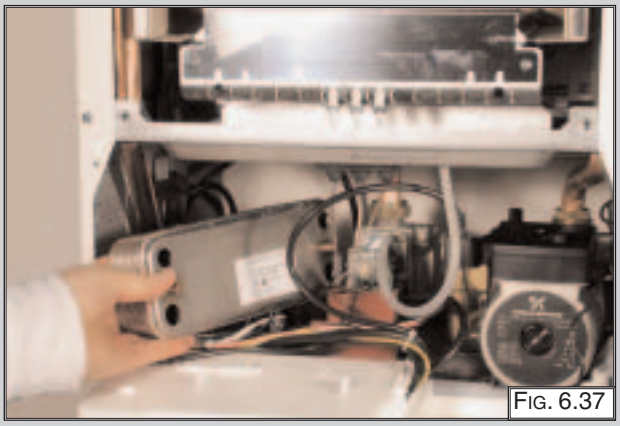

FIG. 6.37

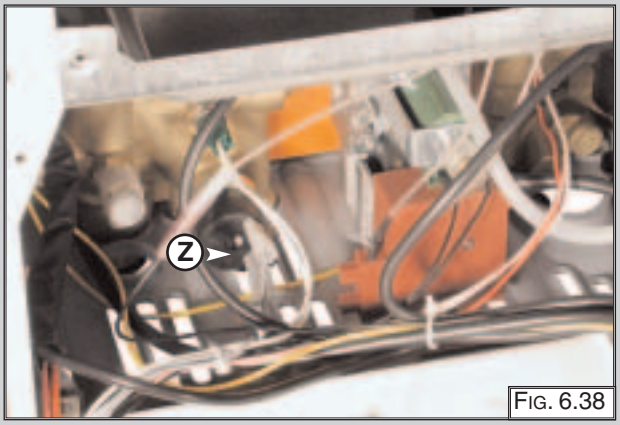

FIG. 6.38

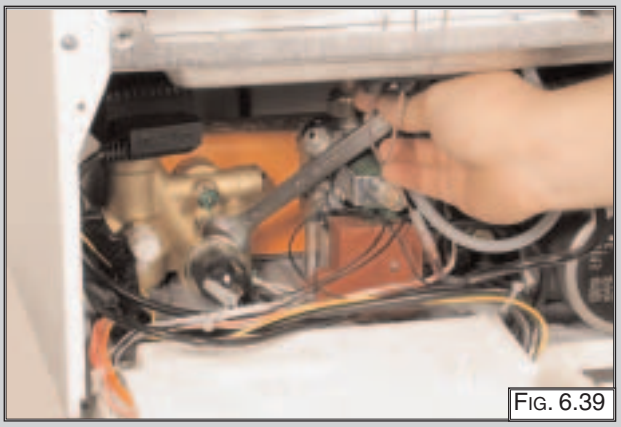

FIG. 6.39

FIG. 6.40

6.5.2 Removing the pump pressure switch

1. Remove the pump pressure switch electrical connections "Z" (FIG 6.38);
2. Unscrew the pump pressure switch by using a spanner on the nut (FIG 6.39);
3. Remove the pump pressure switch (FIG 6.40).

6.5.3 Removing the safety valve

1. Disconnect the discharge pipe work from below the boiler;
2. Unscrew the fixing screw “A1” (FIG. 6.42)
3. Pull the valve upwards for removal (FIG. 6.43).

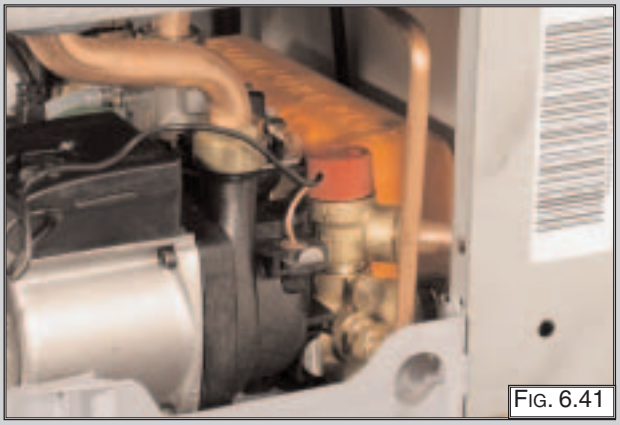

FIG. 6.41

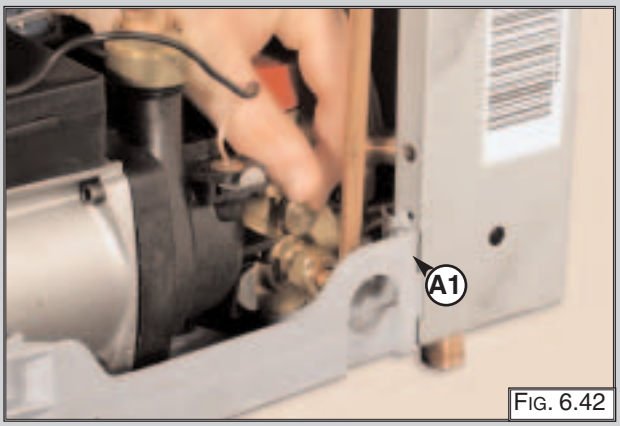

FIG. 6.42

FIG. 6.43

6.5.4 Removing the automatic air vent

1. Remove the U-clip “B1” (FIG. 6.44);
2. Remove valve complete with float using a screwdriver (FIG 6.45-FIG 6.46).

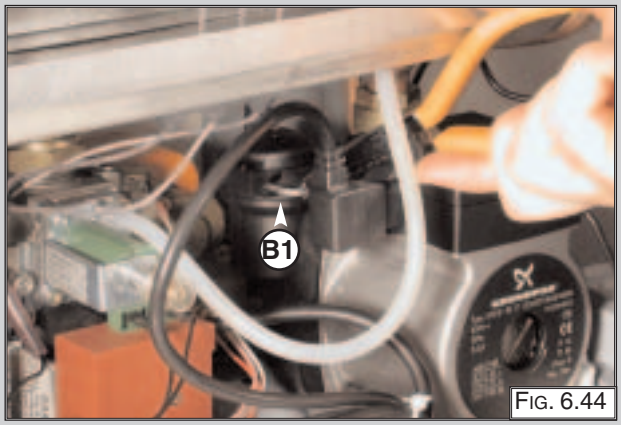

FIG. 6.44

FIG. 6.45

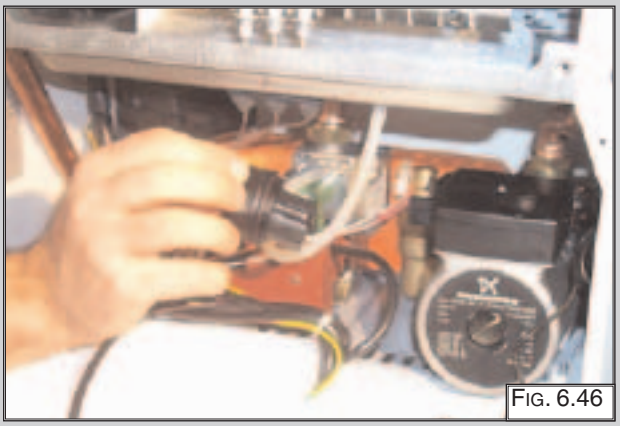

FIG. 6.46

6.5.5 Removing the pump

1. Remove the electrical connection " C1" (FIG. 6.47);
2. Release the nut "D1" (FIG. 6.48);
3. Remove the retaining clip "E1" from the bottom of the boiler (FIG. 6.49);
4. Remove the screw "F1" (FIG. 6.50);
5. Remove the U-clip "G1" and remove the pressure gauge connection (FIG. 6.51);
6. Remove the U-clip "H1" and remove the automatic air vent (FIG. 6.52);
7. Remove the pump.

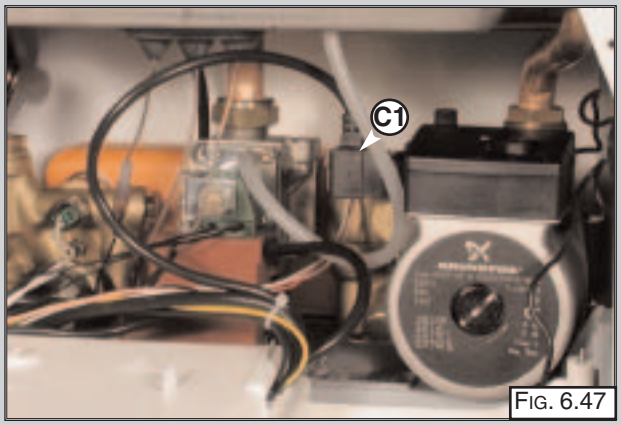

FIG. 6.47

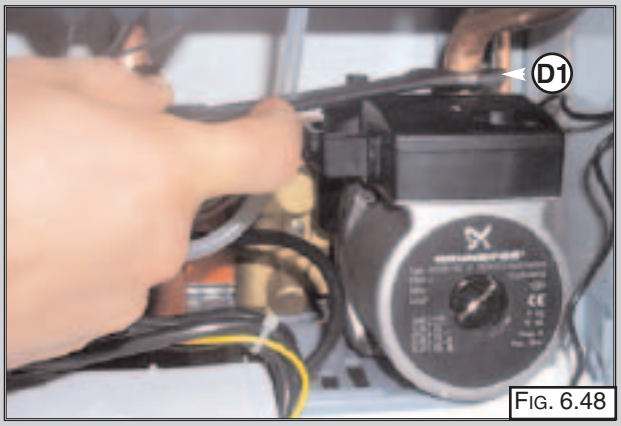

FIG. 6.48

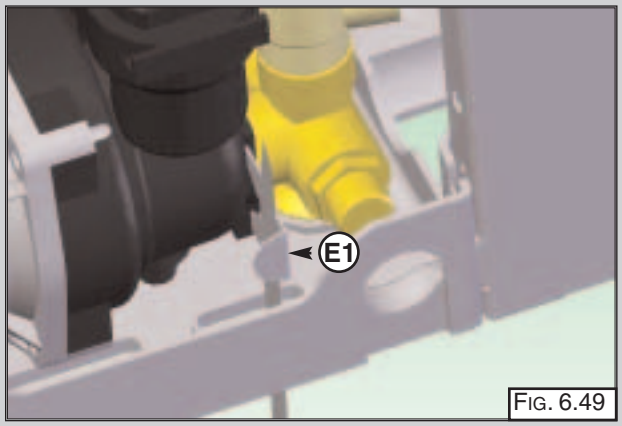

FIG. 6.49

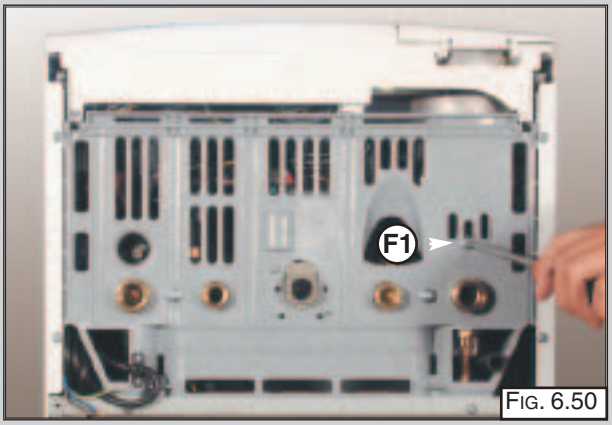

FIG. 6.50

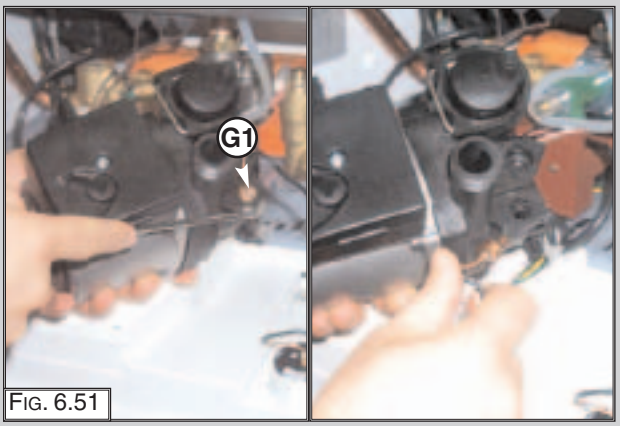

FIG. 6.51

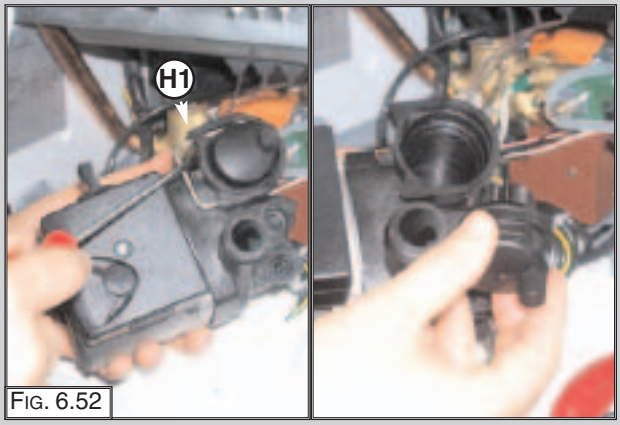

FIG. 6.52

6.5.6 Removing the pressure gauge

1. Remove the U-clip “I1” (Fig. 6.53)
2. Lift the pressure gauge from the rear of the control panel using a screwdriver (Fig. 6.54-6.55).

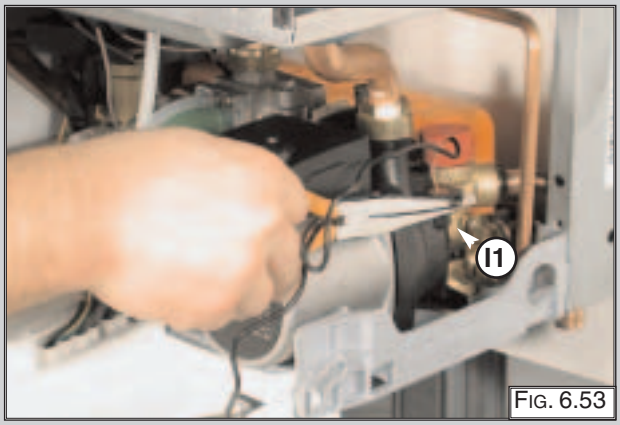

Fig. 6.53

Fig. 6.54

Fig. 6.55

6.5.7 Removing the expansion vessel

1. Release nut “J1” (Fig. 6.56);
2. Remove back-nut “K1” (Fig. 6.57);
3. Remove the expansion vessel (Fig. 6.58).

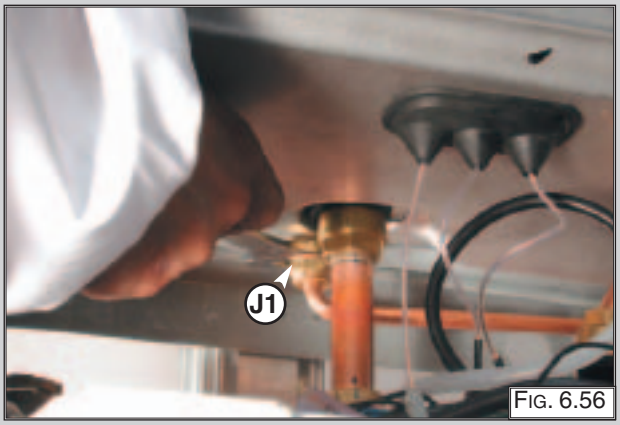

Fig. 6.56

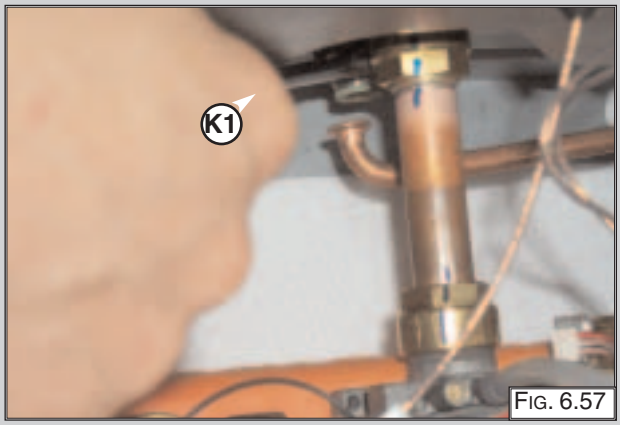

Fig. 6.57

Fig. 6.58

6.5.8 Removing the overheat thermostat

1. Disconnect the overheat thermostat electrical connections “L1” (FIG. 6.59);
2. Then remove the thermostat from its mounting by releasing the securing clip (FIG. 6.60-6.61).

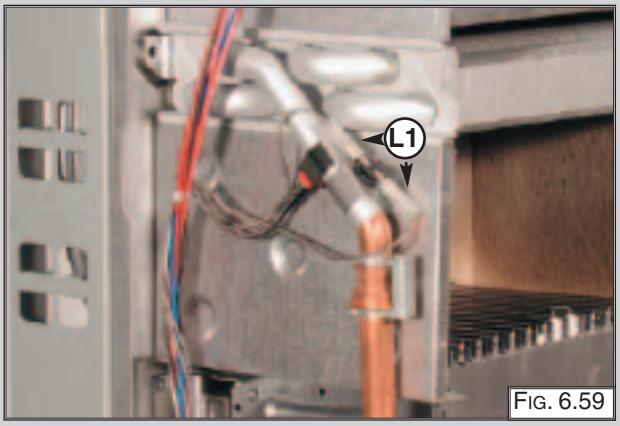

FIG. 6.59

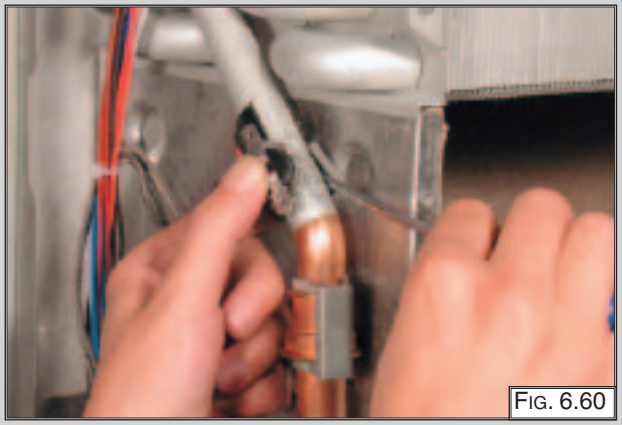
FIG. 6.60

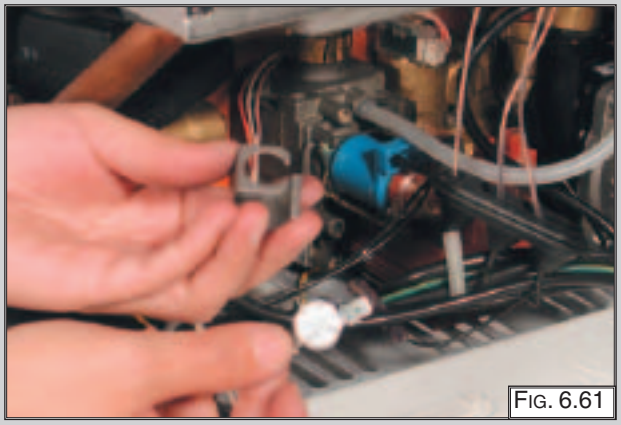
FIG. 6.61

6.5.9 Removing the C.H. temperature probe (N.T.C.)

1. Pull off the electrical connector and remove the sensor probe. (FIG. 6.62-6.63).

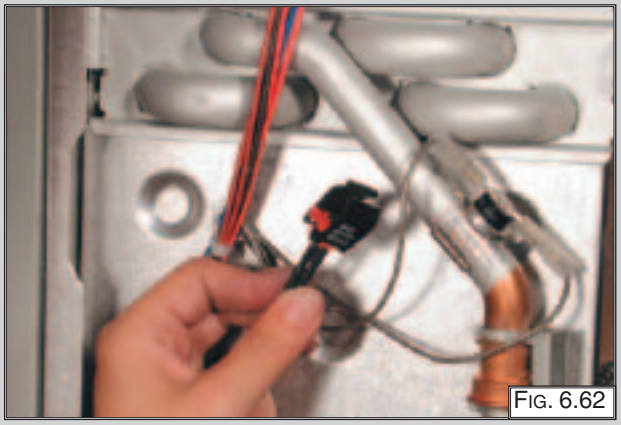
FIG. 6.62

FIG. 6.63

6.5.10 Removing the D.H.W. temperature sensor (N.T.C.)

1. Pull off the electrical connector and unscrew the sensor probe using a suitable spanner (FIG. 6.64).

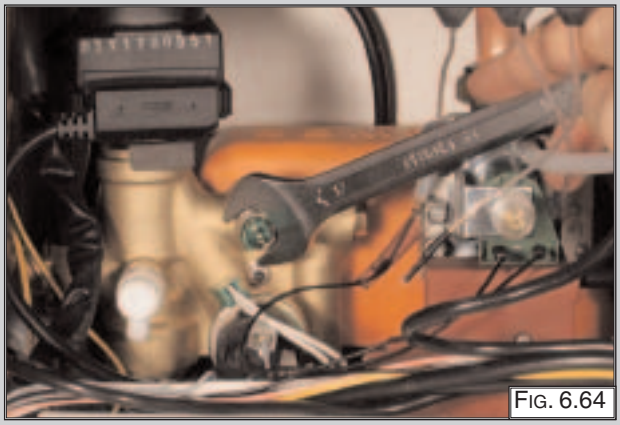

FIG. 6.64

6.5.11 Removing the diverter valve actuator

1. Unplug the electrical connector “M1” (FIG. 6.65);
2. Release the retaining clip “N1” and remove the divertor valve actuator

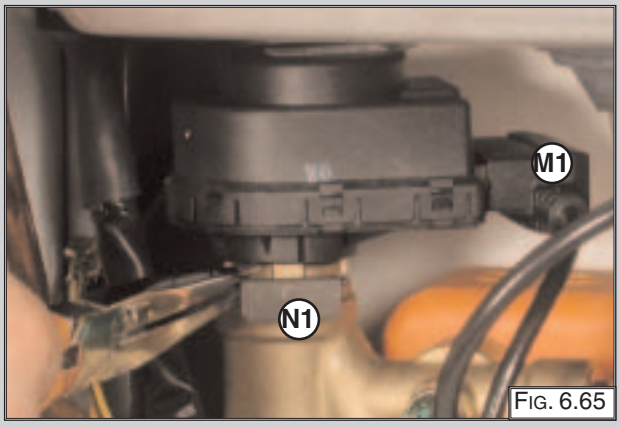

FIG. 6.65

6.5.12 Removing the D.H.W. flow switch

1. Unplug the electrical connector “O1” (FIG. 6.66);
2. Remove the D.H.W. flow switch using a screwdriver (FIG. 6.67-6.68).

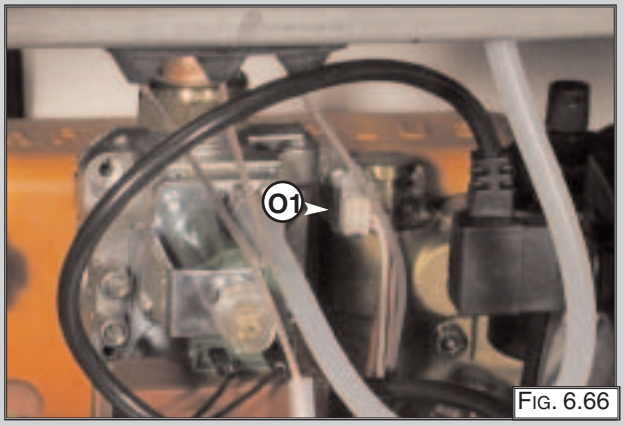

FIG. 6.66

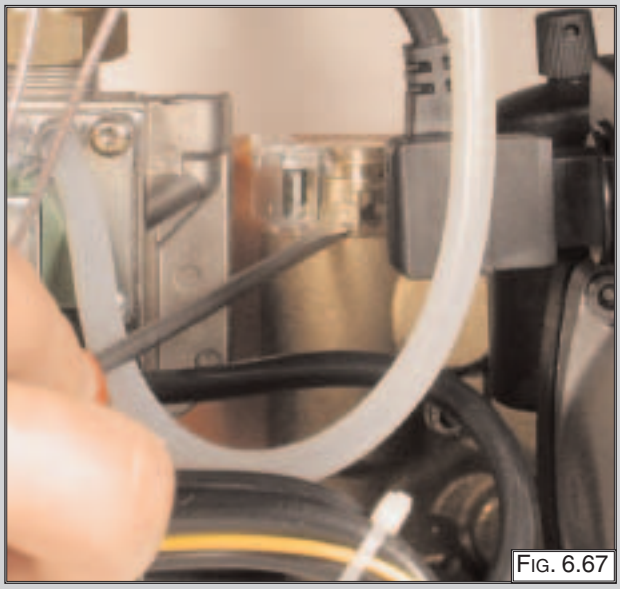

FIG. 6.67

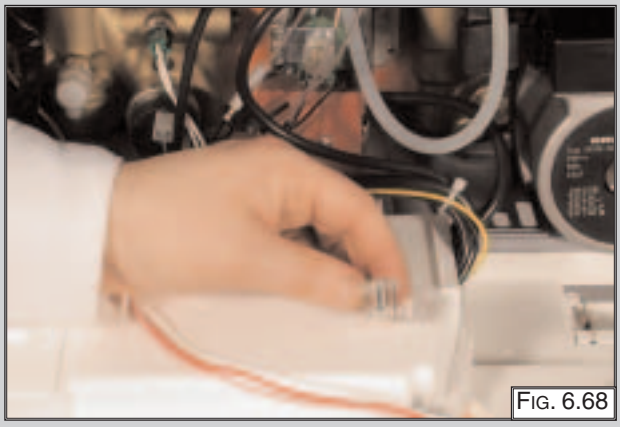

FIG. 6.68

6.6 Access to the Control System

Important! Isolate the electrical supply to the boiler before accessing the control panel.

6.6.1 Checking the fuses

1. Remove the inspection cover on the reverse of the control panel and unscrew the screws "P1"(Fig. 6.69);
2. Remove the fuses (Fig. 6.70).

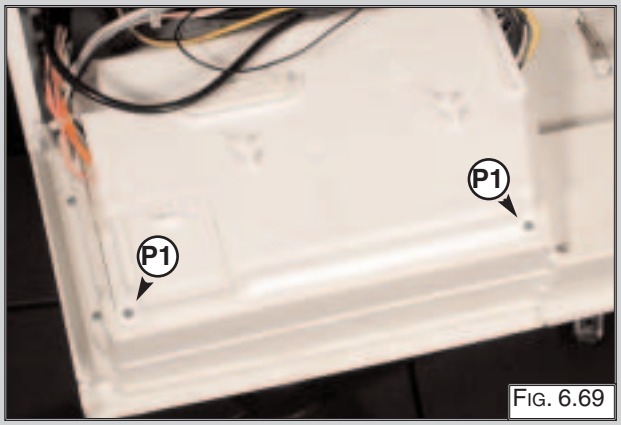

Fig. 6.69

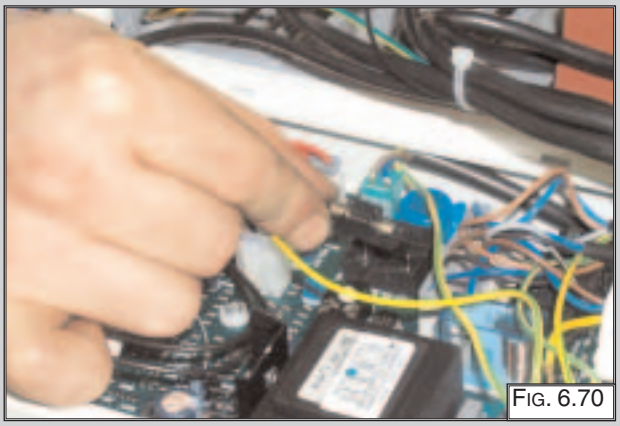
Fig. 6.70

6.6.2 Removing the P.C.B.

1. Isolate electricity;
2. Remove the inspection cover from the reverse of the control panel, unscrew the screws “Q1” (Fig. 6.71);
3. Unplug all electrical connections from the P.C.B (Fig. 6.72);
4. Carefully unplug the EEPROM key “R1” (Fig. 6.73);
5. Remove the screws “S1” (Fig. 6.74);
6. Separate the facia panel from the rear of the control panel ;
7. Remove the main P.C.B., unscrew the screws “T1” (Fig. 6.75);
8. Unscew the display P.C.B. mounting screws “T2” and disconnect the P.C.B. connection cable “T3” (Fig. 6.76);
9. Remove the display P.C.B. (Fig. 6.77);
10. Replace either P.C.B. in reverse order.
11. Refit the EEPROM key “R1”

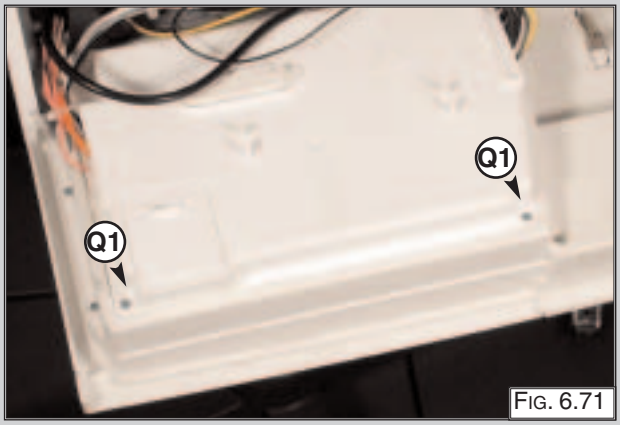

Fig. 6.71

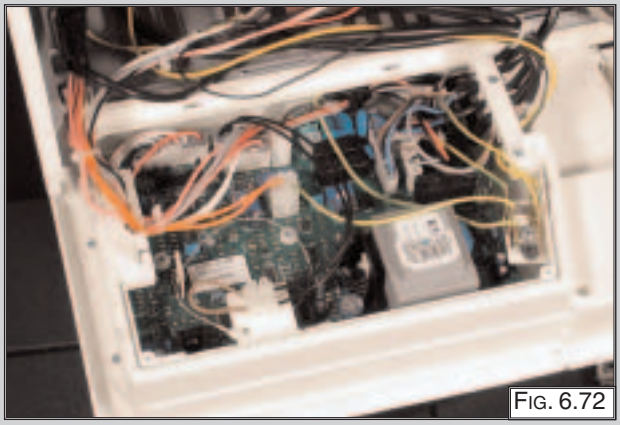
Fig. 6.72

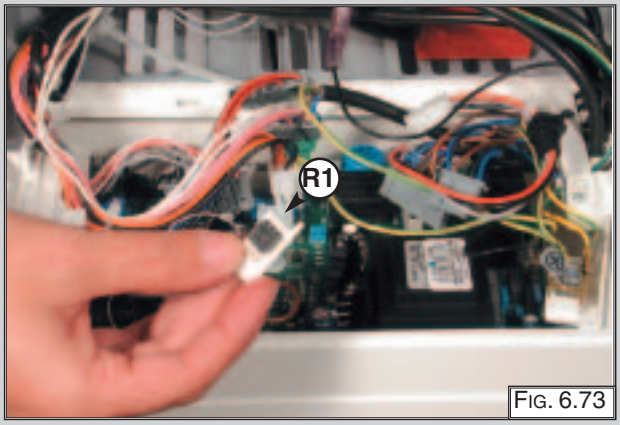

Fig. 6.73

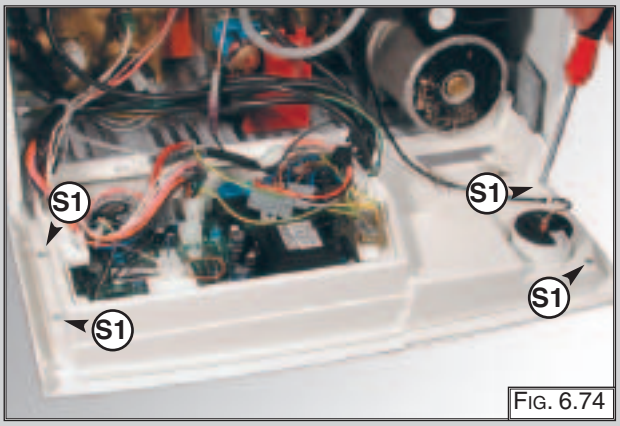

Fig. 6.74

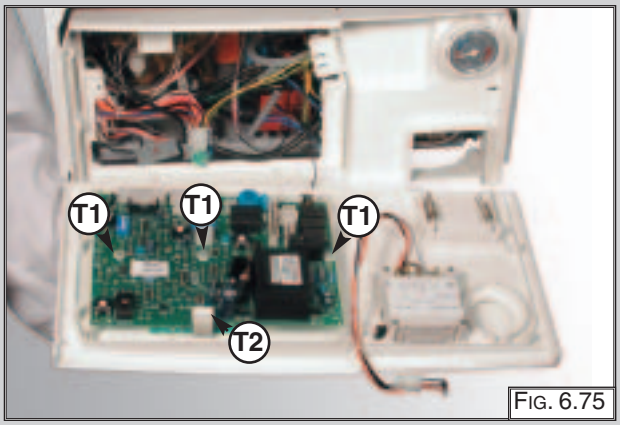

Fig. 6.75

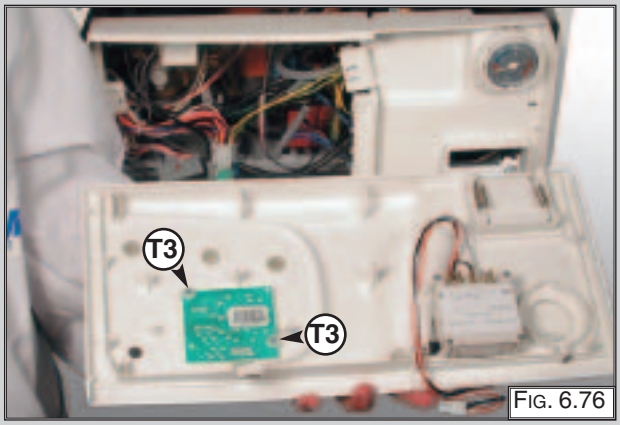

Fig. 6.76

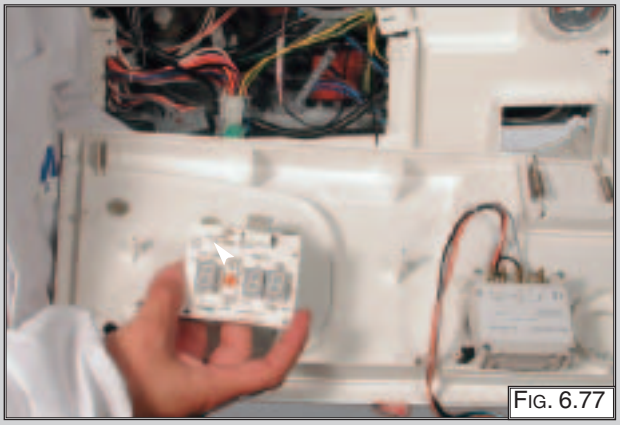
Fig. 6.77

6.6.3 Removing the time clock

1. Disconnect the electrical connections “U1” from the clock (FIG. 6.78);
2. Remove screws “V1” (FIG. 6.78);
3. Lift the time clock out from the control panel (FIG. 6.79).

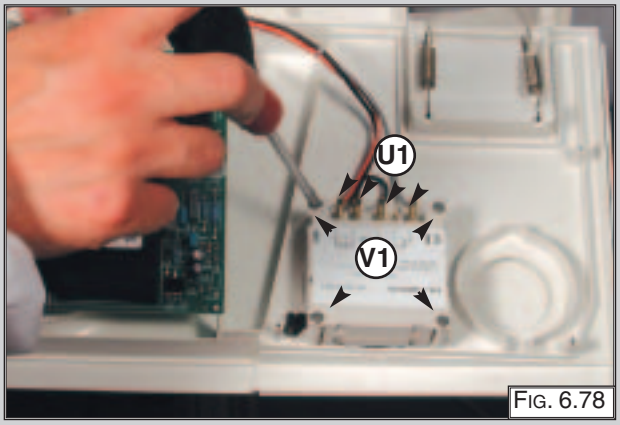

FIG. 6.78

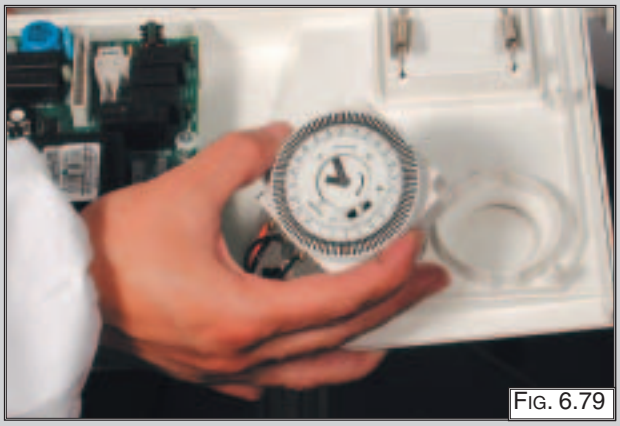
FIG. 6.79

7. FAULT FINDING

These fault finding guides are not exhaustive. However, it is possible to detect and correct many defects by using the standard fault finding diagrams described in this chapter, ensure these guides are carried out in the set order.

7.1 FAULT FINDING GUIDE (FLOW-CHARTS)

To ensure that the external controls do not interfere with the fault finding, disconnect the wires from the terminal block on the rear of the control panel and provide a solid link between the terminals.

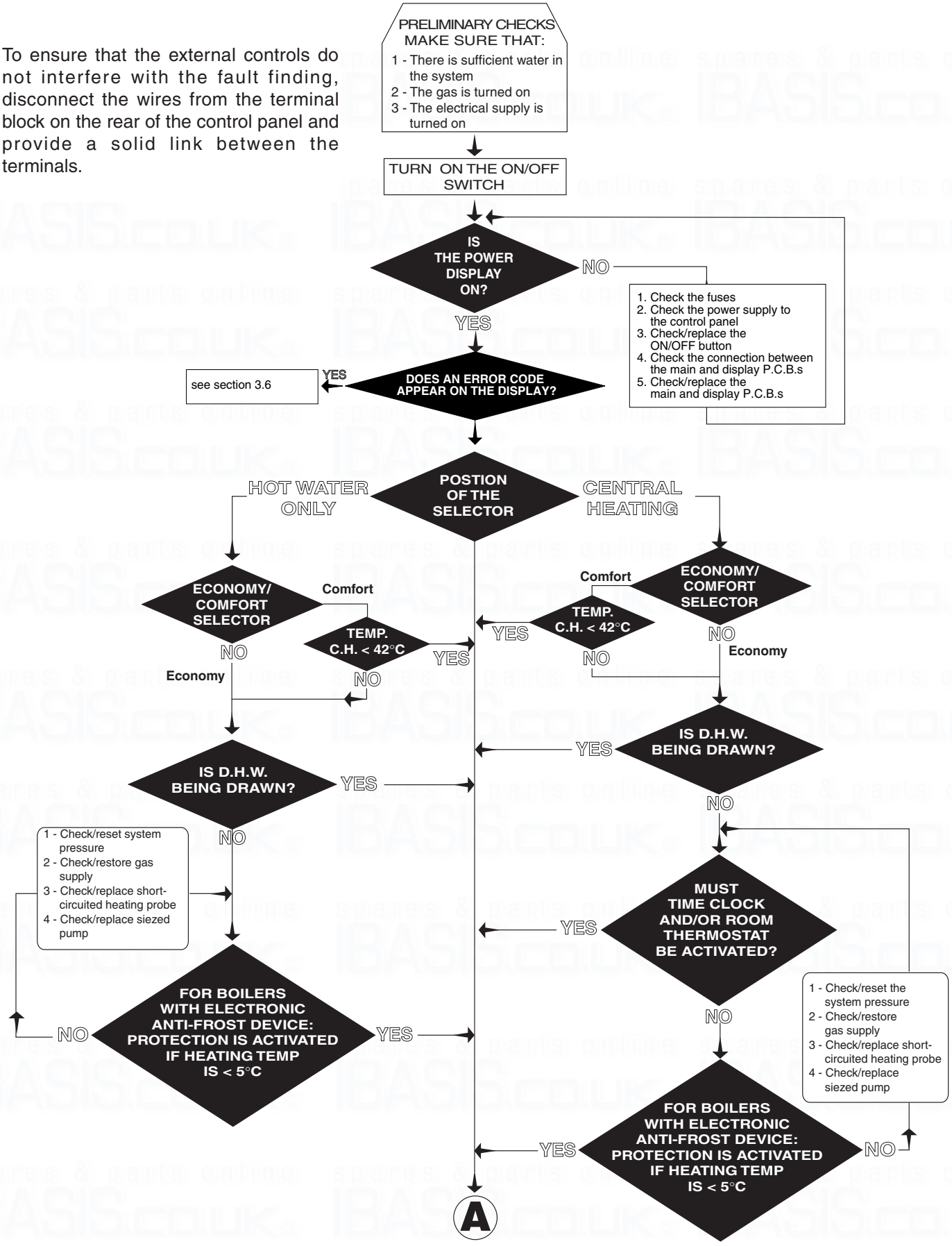

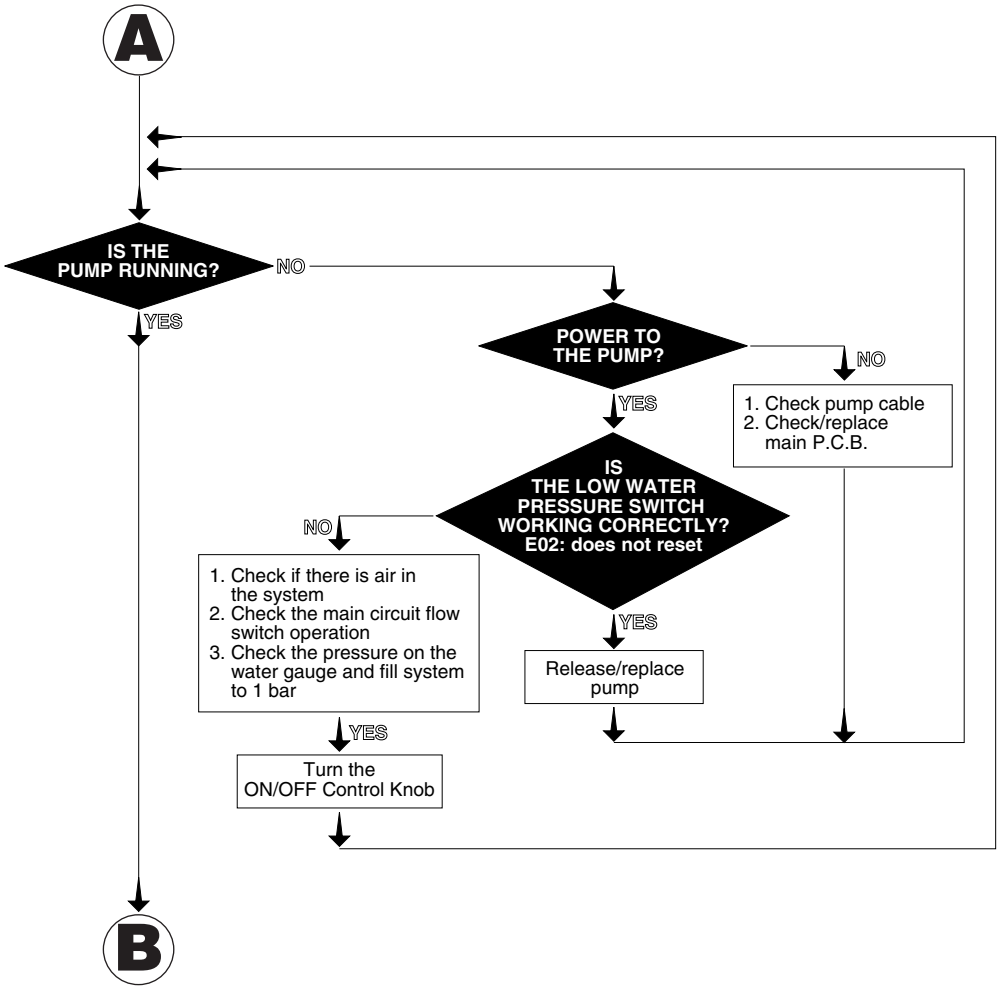
A
IS THE PUMP RUNNING?
NO
YES
POWER TO THE PUMP?
NO
1. Check pump cable
2. Check/replace main P.C.B.
YES
IS THE LOW WATER PRESSURE SWITCH WORKING CORRECTLY? E02: does not reset
NO
1. Check if there is air in the system
2. Check the main circuit flow switch operation
3. Check the pressure on the water gauge and fill system to 1 bar
YES
Turn the ON/OFF Control Knob
YES
Release/replace pump
B

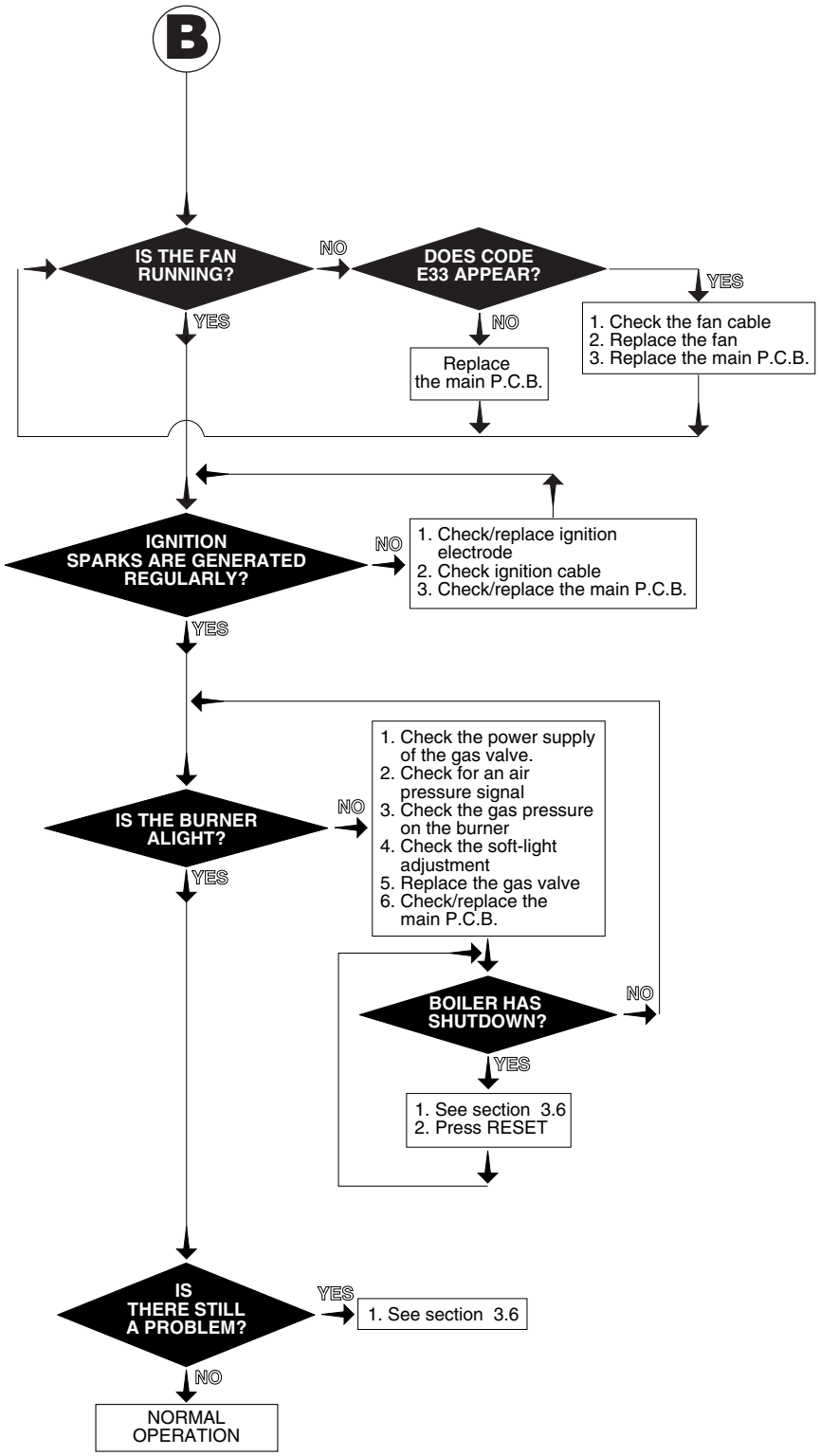
B
IS THE FAN RUNNING?
NO
DOES CODE E33 APPEAR?
YES
1. Check the fan cable
2. Replace the fan
3. Replace the main P.C.B.
YES
NO
Replace the main P.C.B.
IGNITION SPARKS ARE GENERATED REGULARLY?
NO
1. Check/replace ignition electrode
2. Check ignition cable
3. Check/replace the main P.C.B.
YES
IS THE BURNER ALIGHT?
NO
1. Check the power supply of the gas valve.
2. Check for an air pressure signal
3. Check the gas pressure on the burner
4. Check the soft-light adjustment
5. Replace the gas valve
6. Check/replace the main P.C.B.
YES
BOILER HAS SHUTDOWN?
NO
YES
1. See section 3.6
2. Press RESET
IS THERE STILL A PROBLEM?
YES
1. See section 3.6
NO
NORMAL OPERATION

8. EXPLODED VIEW

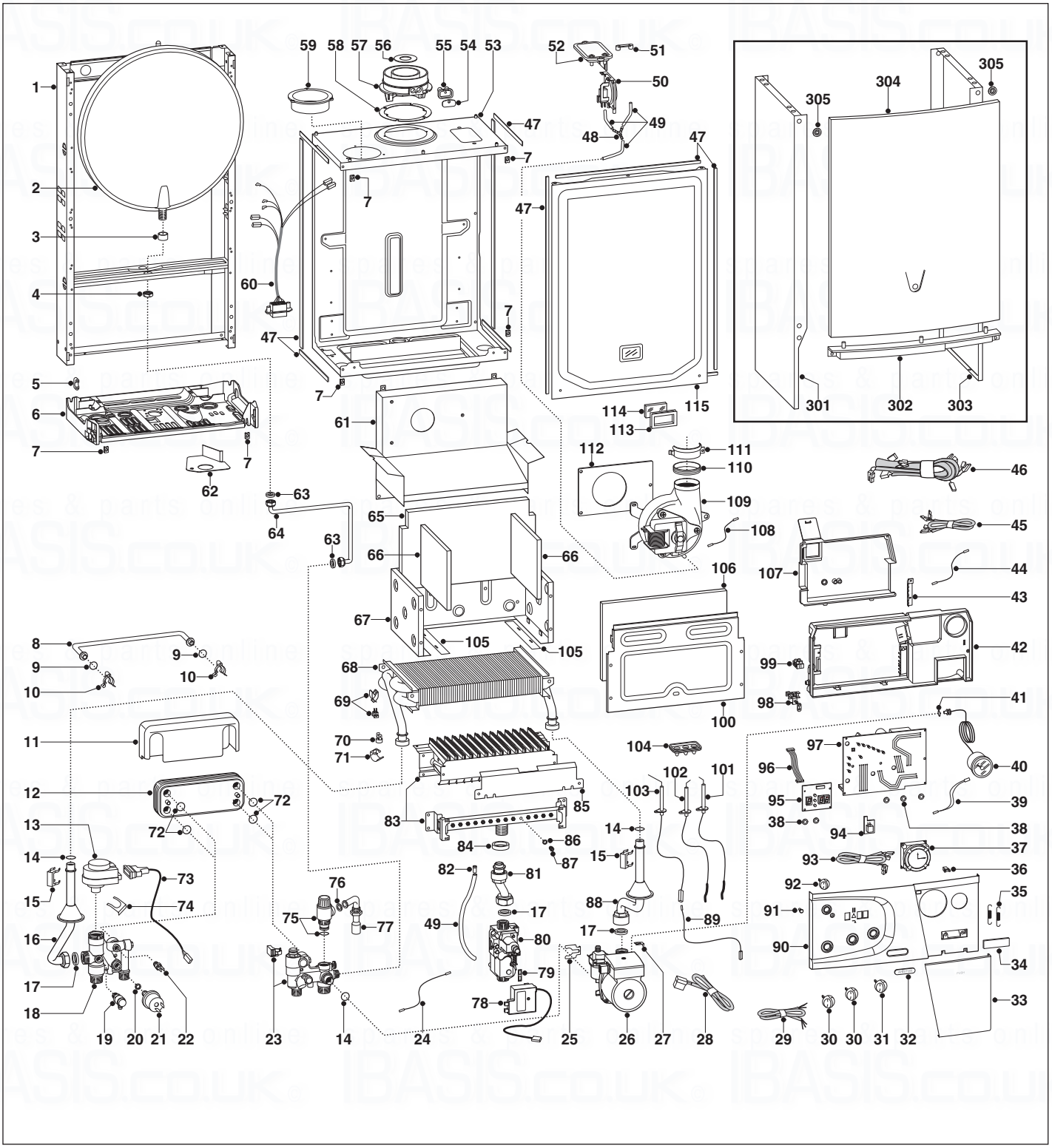

8.1 Short Spares List

Key no.		Description		ARISTON Part No.
2		Expansion vessel		998616
9		O-ring		998077
13		Motor (3- Way valve)		997147
17		Gasket 3/4"		573520
18		Flow group		65100547
20		Gasket 1/4"		569390
21		Low water pressure switch		995903
22		Temperature probe (D.H.W.)		998458
23		Return group (24 MFFI)		65101427
		Return group (28/31 MFFI)		65101257
26		Pump (24 MFFI)		65101426
		Pump (28/31 MFFI)		65101417
37		Clock		999599
40		Pressure gauge		65100695
50		Air pressure switch (28/31 MFFI)		65100716
		Air pressure switch (24 MFFI)		998484
63		Gasket (3/8")		573521
68		Heat exchanger (28/31 MFFI)		61011136
		Heat exchanger (24 MFFI)		61010017
69		Temperature probe & clip (C.H.)		990686
70		Thermostat (overheat)		996065
74		Fixing clip (motor)		997077
75		Safety valve (3 bar)		997088
76		Gasket (1/2")		573528
78		Spark generator		65100249
80		Gas valve		65100244
94		EEPROM key CMP3 (microGENUS II)		65101368
95		P.C.B. (display)		65100709
97		P.C.B. (main)		65100871
101		Electrode (ignition R.H.)		65100693
102		Electrode (ignition L.H.)		65100694
103		Electrode (detection)		65100692
109		Fan (24 MFFI)		999397
		Fan (31 MFFI)		65100719
		Fan (28 MFFI)		65101428
551	(Not Illustrated)	Flow detection kit (w/magnet)		65100540

9. TECHNICAL INFORMATION

General Info	***Name***		**microGenus II 24 MFFI**	**microGenus II 28 MFFI**
	CE Certification		0694BO4008	0051BO2494
	Flue Type		C_{12}-C_{32}-C_{42}-C_{52}-C_{82}-B_{22}-B_{32}	C_{12}-C_{32}-C_{42}-C_{52}-C_{82}-B_{22}-B_{32}
Energy Performance	Heat Input max/min	kW	29.4 / 12.2	33.1 / 13.3
	Heat Output max/min	kW	24.8 / 9.7	28 / 10.5
	Efficiency of Nominal Heat Input	%	84.3	84.5
	Efficiency at 30% of Nominal Heat Input	%	81.6	80.5
	Efficiency at Minum Input	%	79.6	78.7
	SEDBUK Rating	Band	D	D
	Heat Loss to the Casing (ΔT=50°C)	%	1.2	1.1
	Flue Heat Loss with Burner Operating	%	5.1	5.7
	Flue Heat Loss with Burner Off	%	0.4	0.4
Emissions	Max Discharge of Products of Combustion (G20)	Kg/h	51.4	61.9
	Residual Discharge Head	mbar	1.23	0.65
	Temp. of exhaust fumes at nominal capacity	°C	106.9	115.4
	CO_2 Content	%	7.15	6.67
	O_2 Content	%	7.9	8.4
	CO Content	ppm	39.3	36.8
	Nox Class		3	3
	Minimum Ambient Temperature	°C	+5	+5
Central Heating	Head Loss on Water Side (max) (T=20°C)	mbar	200	200
	Residual Head of System	bar	0.25	0.25
	Expansion Vessel Pre-load Pressure	bar	0.7	0.7
	Maximum Heating Pressure	bar	3	3
	Expansion Vessel Capacity	l	7	7
	Maximum Water Content of System	l	130	130
	Heating Temperature max/min	°C	82 / 42	82 / 42
Domestic Hot Water	Domestic Hot Water Temperature (approx) max/min	°C	56 / 36	56 / 36
	Specific Flow Rate (10 minutes/DT 30°C)	l/min	11.8	13.3
	D.H.W. Flow Rate ΔT=25°C	l/min	14.2	15.9
	D.H.W. Flow Rate ΔT=35°C	l/min	10.2	11.4
	D.H.W. Minimum Flow Rate	l/min	2.5	2.5
	Pressure of Domestic Hot Water max/min	bar	6 / 0.2	6 / 0.2
Gas	Nominal Pressure Natural Gas (G20)	mbar	20	20
	LPG (G30-G31)	mbar	28/30 - 37	28/30 - 37
	Consumption at Nominal Capacity(G20)	m^3/h	2.80	3.15
	(15°C, 1013 mbar) (G30-G31)	Kg/h	2.09 - 2.06	2.35 - 2.31
	Gas Consumption after 10 Minutes*	m^3	0.33	0.37
Electrical Data	Electrical Supply (V ± 5%)	V/Hz	230/50	230/50
	Power Consumption	W	125	140
	Protection Grade of Electrical System	IP	X4D	X4D
	Internal Fuse Rating		2A FAST	2A FAST
	Dry Weight	Kg	34	35
	Dimensions (W/D/H)	mm	700x400x315	700x400x315
	Maximum Flue Length (Horizontal)	m	4	4
	Maximum Flue Length (Vertical)	m	5	5
	G.C. Number		**47-116-25**	**47-116-26**

*Calculated at 70% maximum output

General Info	***Name***		**microGenus II 31 MFFI**
	CE Certification		0694BO4008
	Flue Type		C_{12}-C_{32}-C_{42}-C_{52}-C_{82}-B_{22}-B_{32}
Energy Performance	Heat Input max/min	kW	37.2 / 15.5
	Heat Output max/min	kW	31.1 / 12.1
	Efficiency of Nominal Heat Input	%	83.6
	Efficiency at 30% of Nominal Heat Input	%	81
	Efficiency at Minum Input	%	78.1
	SEDBUK Rating	Band	D
	Heat Loss to the Casing (T=50°C)	%	1.5
	Flue Heat Loss with Burner Operating	%	5.7
	Flue Heat Loss with Burner Off	%	0.4
Emissions	Max Discharge of Products of Combustion (G20)	Kg/h	64.7
	Residual Discharge Head	mbar	1.6
	Temp. of exhaust fumes at nominal capacity	°C	121.2
	CO_2 Content	%	7.19
	O_2 Content	%	7.8
	CO Content	ppm	60.5
	Nox Class		3
	Minimum Ambient Temperature	°C	+5
Central Heating	Head Loss on Water Side (max) (T=20°C)	mbar	200
	Residual Head of System	bar	0.25
	Expansion Vessel Pre-load Pressure	bar	0.7
	Maximum Heating Pressure	bar	3
	Expansion Vessel Capacity	l	7
	Maximum Water Content of System	l	130
	Heating Temperature max/min	°C	82 / 42
Domestic Hot Water	Domestic Hot Water Temperature (approx) max/min	°C	56 / 36
	Specific Flow Rate (10 minutes/DT 30°C)	l/min	14.8
	D.H.W. Flow Rate ΔT=25°C	l/min	17.8
	D.H.W. Flow Rate ΔT=35°C	l/min	12.7
	D.H.W. Minimum Flow Rate	l/min	2.5
	Pressure of Domestic Hot Water max/min	bar	6 / 0.2
Gas	Nominal Pressure — Natural Gas (G20)	mbar	20
	Nominal Pressure — LPG (G30-G31)	mbar	28/30 - 37
	Consumption at Nominal Capacity(G20)	m^3/h	3.54
	(15°C, 1013 mbar) (G30-G31)	Kg/h	2.64 - 2.60
	Gas Consumption after 10 Minutes*	m^3	0.41
Elettrical Data	Electrical Supply (V ± 5%)	V/Hz	230/50
	Power Consumption	W	165
	Protection Grade of Electrical System	IP	X4D
	Internal Fuse Rating		2A FAST
	Dry Weight	Kg	36
	Dimensions (W/D/H)	mm	700x400x315
	Maximum Flue Length (Horizontal)	m	4
	Maximum Flue Length (Vertical)	m	5
	G.C. Number		**47-116-27**

*Calculated at 70% maximum output

spares & parts online IBASIS.CO.UK

BENCHMARK No. | | | | | | |

GAS BOILER COMMISSIONING CHECKLIST

BOILER SERIAL No. _____ **NOTIFICATION No.** _____

CONTROLS *To comply with the Building Regulations, each section must have a tick in one or other of the boxes*

TIME & TEMPERATURE CONTROL TO HEATING	ROOM T/STAT & PROGRAMMER/TIMER	☐	PROGRAMMABLE ROOMSTAT	☐
TIME & TEMPERATURE CONTROL TO HOT WATER	CYLINDER T/STAT & PROGRAMMER/TIMER	☐	COMBI BOILER	☐
HEATING ZONE VALVES	FITTED	☐	NOT REQUIRED	☐
HOT WATER ZONE VALVES	FITTED	☐	NOT REQUIRED	☐
THERMOSTATIC RADIATOR VALVES	FITTED	☐		
AUTOMATIC BYPASS TO SYSTEM	FITTED	☐	NOT REQUIRED	☐

FOR ALL BOILERS CONFIRM THE FOLLOWING

THE SYSTEM HAS BEEN FLUSHED IN ACCORDANCE WITH THE BOILER MANUFACTURER'S INSTRUCTIONS? ☐

THE SYSTEM CLEANER USED

THE INHIBITOR USED

FOR THE CENTRAL HEATING MODE, MEASURE & RECORD

GAS RATE		m^3/hr		ft^3/hr
BURNER OPERATING PRESSURE (IF APPLICABLE)	☐	N/A		mbar
CENTRAL HEATING FLOW TEMPERATURE				°C
CENTRAL HEATING RETURN TEMPERATURE				°C

FOR COMBINATION BOILERS ONLY

HAS A WATER SCALE REDUCER BEEN FITTED? YES ☐ NO ☐

WHAT TYPE OF SCALE REDUCER HAS BEEN FITTED?

FOR THE DOMESTIC HOT WATER MODE, MEASURE & RECORD

GAS RATE		m^3/hr		ft^3/hr
MAXIMUM BURNER OPERATING PRESSURE (IF APPLICABLE)	☐	N/A		mbar
COLD WATER INLET TEMPERATURE				°C
HOT WATER OUTLET TEMPERATURE				°C
WATER FLOW RATE				lts/min

FOR CONDENSING BOILERS ONLY CONFIRM THE FOLLOWING

THE CONDENSATE DRAIN HAS BEEN INSTALLED IN ACCORDANCE WITH THE MANUFACTURER'S INSTRUCTIONS? YES ☐

FOR ALL INSTALLATIONS CONFIRM THE FOLLOWING

THE HEATING AND HOT WATER SYSTEM COMPLIES WITH CURRENT BUILDING REGULATIONS ☐

THE APPLIANCE AND ASSOCIATED EQUIPMENT HAS BEEN INSTALLED AND COMMISSIONED IN ACCORDANCE WITH THE MANUFACTURER'S INSTRUCTIONS ☐

IF REQUIRED BY THE MANUFACTURER, HAVE YOU RECORDED A CO/CO_2 RATIO READING? N/A ☐ YES _____ CO/CO_2 RATIO

THE OPERATION OF THE APPLIANCE AND SYSTEM CONTROLS HAVE BEEN DEMONSTRATED TO THE CUSTOMER ☐

THE MANUFACTURER'S LITERATURE HAS BEEN LEFT WITH THE CUSTOMER ☐

COMMISSIONING ENG'S NAME PRINT _____ CORGI ID No. _____

SIGN _____ DATE _____

SERVICE INTERVAL RECORD

It is recommended that your heating system is serviced regularly
and that you complete the appropriate Service Interval Record Below.

Service Provider. Before completing the appropriate Service Interval Record below, please ensure you have carried out the service as described in the boiler manufacturer's instructions. Always use the manufacturer's specified spare part when replacing all controls

SERVICE 1 DATE
ENGINEER NAME
COMPANY NAME
TEL No.
CORGI ID CARD SERIAL No.
COMMENTS
SIGNATURE

SERVICE 2 DATE
ENGINEER NAME
COMPANY NAME
TEL No.
CORGI ID CARD SERIAL No.
COMMENTS
SIGNATURE

SERVICE 3 DATE
ENGINEER NAME
COMPANY NAME
TEL No.
CORGI ID CARD SERIAL No.
COMMENTS
SIGNATURE

SERVICE 4 DATE
ENGINEER NAME
COMPANY NAME
TEL No.
CORGI ID CARD SERIAL No.
COMMENTS
SIGNATURE

SERVICE 5 DATE
ENGINEER NAME
COMPANY NAME
TEL No.
CORGI ID CARD SERIAL No.
COMMENTS
SIGNATURE

SERVICE 6 DATE
ENGINEER NAME
COMPANY NAME
TEL No.
CORGI ID CARD SERIAL No.
COMMENTS
SIGNATURE

SERVICE 7 DATE
ENGINEER NAME
COMPANY NAME
TEL No.
CORGI ID CARD SERIAL No.
COMMENTS
SIGNATURE

SERVICE 8 DATE
ENGINEER NAME
COMPANY NAME
TEL No.
CORGI ID CARD SERIAL No.
COMMENTS
SIGNATURE

SERVICE 9 DATE
ENGINEER NAME
COMPANY NAME
TEL No.
CORGI ID CARD SERIAL No.
COMMENTS
SIGNATURE

SERVICE 10 DATE
ENGINEER NAME
COMPANY NAME
TEL No.
CORGI ID CARD SERIAL No.
COMMENTS
SIGNATURE

spares & parts online IBASIS.CO.UK

Manufacturer: **Merloni TermoSanitari SpA - Italy**

Commercial subsidiaries:

MTS (GB) Limited
MTS Building
Hughenden Avenue
High Wycombe
Bucks HP13 5FT

Telephone: (01494) 755600

Fax: (01494) 459775

Internet: www.mtsgroup.com/uk

E-mail: info@uk.mtsgroup.com

Technical Advice: 0870 241 8180

Customer Service: 0870 600 9888

MTS Heating Limited
Damastown Industrial Park
Damastown Avenue
Mulhuddart
Dublin 15

Telephone: (01) 810 3723

Fax: (01) 810 3727

Internet: www.mtsgroup.com/ie

E-mail: info@ie.mtsgroup.com

Technical Advice: (01) 437 0121

Customer Service: (01) 437 0121

0 99 84 1854 211 Edition 2 04/04