ARISTON

Instructions for Installation,
Servicing and Use

Unvented Hot Water Storage Cylinders

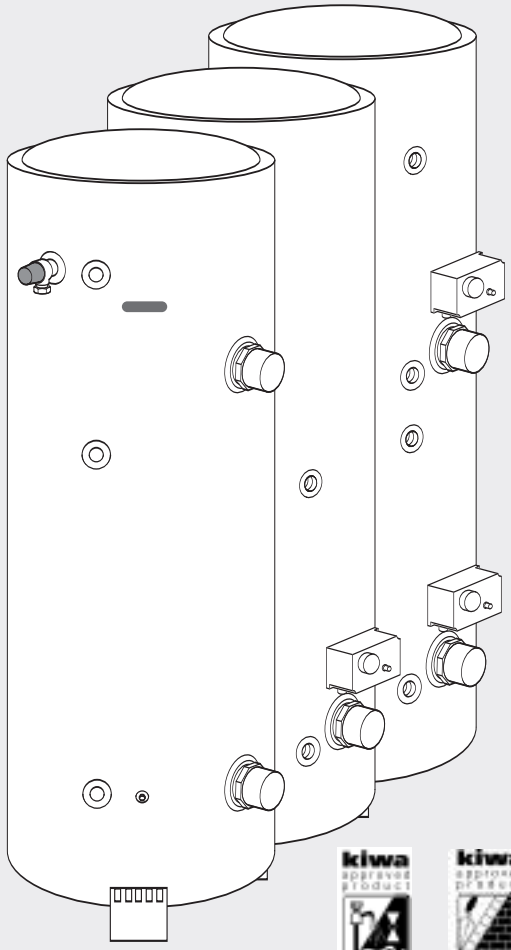

Country of destination: GB/IE

kiwa approved product

kiwa approved product

CE

WRAS APPROVED PRODUCT

WRc-NSF Ltd
Building Regulations Approved

benchmark

TABLE OF CONTENTS

1.	THE BENCHMARK SCHEME	Page 2
2.	GENERAL INFORMATION	Page 3
2.1	Guarantee	Page 3
2,2	How the Appliance Works	Page 3
2.3	Delivery	Page 4
3.	INSTALLATION	Page 5
3.1	Water Regulations	Page 5
3.2	Building Regulations	Page 5
3.3	General Guidance	Page 5
3.4	Cold Water Supply	Page 5
3.6	Siting and Fixing	Page 6
3.7	Overall Dimensions	Page 7
3.8	Connection of Mains Supply	Page 8
3.9	Cold Water Combination Valve	Page 11
3.10	Connection to Services	Page 14
3.11	Secondary Return	Page 14
3.12	Discharge Pipework	Page 14
3.13	Electrical Connection	Page 17
3.14	Electrical Diagrams	Page 19
4.	COMMISSIONING	Page 24
5.	MAINTENANCE	Page 26
5.1	ProTech Anti-corrosion System	Page 26
5.2	Thermal Cut-out(s)	Page 26
5.3	Immersion Heater(s)	Page 26
5.4	Unvented Controls	Page 26
5.5	Thermostats	Page 27
5.6	Maintenance	Page 27
6.	FAULT FINDING	Page 29
7.	TECHNICAL INFORMATION	Page 30
8.	BENCHMARK COMMISSIONING CHECKLIST	Page 34
9.	BENCHMARK SERVICE RECORD	Page 35

1. The Benchmark Scheme

Benchmark places responsibilities on both manufacturers and installers. The purpose is to ensure that customers are provided with the correct equipment for their needs, that is installed, commissioned and serviced in accordance with the manufacturer's instructions by competent persons and that it meets the requirements of the appropriate Building Regulations. The Benchmark Checklist can be used to demonstrate compliance with Building Regulations and should be provided to the customer for future reference.

Installers are required to carry out installation, commissioning and servicing work in accordance with the Benchmark Code of Practice which is available from the Heatinmg and Hotwater Industry Council who manage and promote the Scheme. Visit ***www.centralheating.co.uk*** for more information.

2. GENERAL INFORMATION

This manual is an integral and essential part of the product. It should be kept with the appliance so that it can be consulted by the user and/or authorised personnel.

Please read carefully the instructions and notices about the appliance contained in this manual, as they provide important information regarding the safe installation, use and maintenance of the cylinder.
Failure to do so may invalidate the guarantee.

When installing and servicing the cylinder, Ariston ThermoUK Ltd recommend the use of protective clothing i.e. gloves.

2.1 GUARANTEE

The MTS range of unvented cylinders come with varying guarantees depending on the model of cylinder. The guarantee periods offered with each model of cylinder are as follows:

ST Range	-	10 Years tank
	-	2 Years electrical components
Classico Range	-	5 Years tank
	-	2 Years electrical components
Primo Range	-	25 Years tank
	-	2 Years electrical components
High Capacity Range	-	10 Years tank
	-	2 Years electrical components

Note: The guarantee is subject to the cylinder being installed and serviced annually by a competent person as per the servicing instructions in Section 5.6 of this manual. For units with the ProTech anti-corrosion device it must be ensured that this is connected and operating correctly (green LED only).

2.2 HOW THE APPLIANCE WORKS

The immersion heater(s) are controlled through a thermostat which senses the water temperature. The operating temperature can be pre-set by adjusting the spindle in the head of the thermostat. In addition to the thermostat there is a thermal cut-out incorporated if the thermostat fails and the water temperature rises too high. Once the cut-out operates it can only be re-set manually after the fault has been rectified.
Indirect models have dual thermal controls. In addition to the above there is a separate cylinder thermostat and thermal cut-out for controlling each indirect circuit. Again the thermal cut-out operates if the cylinder thermostat fails, by disconnecting the live feed (call for hot water) from the programmer.

ITI/ITD/ITSI models have a stainless steel tank and therefore need no protection against corrosion.

STD/STI models have an enamelled steel tank and therefore are supplied with magnesium anodes to prevent corrosion of the cylinder tank. It is imperative that the top anode is checked during the annual service and if found to be corroded both anodes should be replaced. Failure to do so could invalidate the warranty of the tank.

All *High Capacity* (STD/STI) 500 litre models and *Wall-hung* (ST) units utilise the *ProTech* anti-corrosion system (electronic anode). This prevents an electrolytic reaction between the tank and dissimilar metals. The ProTech system shows if it is operating correctly (green LED) or incorrectly (red LED). In the event that the red LED lights (even with the green light still showing), it is imperative that a service agent is contacted immediately as continued use with the ProTech system in this state could invalidate the warranty on the tank.

The factory fitted temperature & pressure relief valve at the top of the cylinder is a safety device to back-up the thermostat(s) and thermal cut-out(s). It works by sensing an excess in water temperature or pressure and releasing the hot water into a discharge tundish and drain.
The cylinder will only work in the vertical position. The inlet pipe needs to deliver cold water to the bottom of the tank. When water is heated it expands. To accommodate this increase in volume an expansion vessel is provided. A cold water combination valve is also provided in two pieces, loose jointed for ease of installation. These comprise a combined line strainer/pressure reducing valve and core non-return valve/expansion relief valve.

2.3 DELIVERY

The Ariston range of Unvented Cylinders are available in the following options:

The *Wall-hung ProTech* range (50, 80, 100 litre models), which are supplied as follows;

One box containing;
1) The cylinder with factory fitted temperature & pressure relief valve, immersion heater and thermostat with thermal cut-out.

One box containing;
1) Unvented control pack (expansion vessel, 2 piece cold water combination valve and tundish), instructions for installation, servicing and use and the Benchmark Log Book).

The *High Capacity ProTech* floor-standing range (500 litre models), which are supplied as follows;

One box containing;
1) The cylinder with factory fitted temperature & pressure relief valve.

One box containing;
1) Unvented control pack (expansion vessel, 2 piece cold water combination valve and tundish), motorised valve (indirect only, non-high temperature). Immersion heater(s) and thermostat(s) with thermal cut-out(s), cylinder thermostat with thermal cut-out (indirect only), feet (x 3), instructions for installation, servicing and use and the Benchmark Log Book.

The *STD* and *STI* floor standing range (125, 150, 200 and 300 litre models) and the ITD and ITI floor standing range (100, 125, 150, 175, 200, 250 and 300 litre models which are supplied as follows;

One box containing;
1) The cylinder with factory fitted temperature & pressure relief valve.

One box containing;
1) Unvented control pack (expansion vessel, 2 piece cold water combination valve and tundish), motorised valve (indirect only, non-high temperature). Immersion heater(s) and thermostat(s) with thermal cut-out(s), cylinder thermostat with thermal cut-out (indirect only), feet (x3), expansion vessel mounting bracket and hose, instructions for installation, servicing and use and the Benchmark Log Book.

The *ITSI* twin coil floor standing range (200, 250 and 300 litre models) are supplied with the following;

One box containing;
1) The cylinder with factory fitted temperature & pressure relief valve.

One box containing;
1) Unvented control pack (expansion vessel, 2 piece cold water combination

valve and tundish), 2 x motorised valves (non-high temperature), 2 x Immersion heaters and thermostats with thermal cut-out, 2 x cylinder thermostats with thermal cut-out, 1 x elongated thermostat pocket (for solar applications), feet (x3), expansion vessel mounting bracket and hose, instructions for installation, servicing and use and the Benchmark Log Book.

3. INSTALLATION

The appliance should be installed in accordance with the Domestic Heating Compliance Guide.

3.1 Water Regulations

These regulations (byelaws in Scotland) ensure a good supply of wholesome water, and that only approved materials, pipes and fittings are used to convey water.

3.2 Building Regulations

These are a statutory document and take priority over all other regulations and recommendations. The installation of an unvented hot water storage cylinder is classified as a “Controlled Service” and Regulation G3 applies. To meet the requirements of the Regulation, installation of an unvented system should be undertaken by a “competent installer”.
All installations of unvented hot water storage systems having a capacity of more than 15 litres should be notified to the relevant Local Authority by means of building notice or by the submission of full plans. It is important to note that it is a criminal offense to install an unvented hot water storage system without notifying the Local Authority. The installation of the unvented cylinder and hot water system must comply with BS 6700 and the HSE Legionella Code of Practice.

3.3 General Guidance

Current guidance notes do not cover the connection of a solar thermal circuit to an unvented storage vessel (cylinder). However, if guidance is sought for compliance with current regulations the fundamental principle is to provide a failsafe means of shutting off the solar input to the heat exchanger if the cylinder temperature should rise above the set temperature of the cylinder’s energy cut out. (See Note 1).
As with all unvented hot water systems, notification of intention to install should be given to your local building control.

Option A. A non self resetting mechanical shut-off should be installed on the solar primary flow to the cylinder. The mechanical shut-off should be suitable for use with a solar primary circuit (i.e. high temperature and glycol resistant). The mechanical shut-off should be integrated electrically with the cylinder energy cut out/s and if necessary the solar circuit temperature control, please refer to the solar controller manufacturer for further information.

Option B. Where the solar controller and hydraulic system demonstrate that by no lesser means the requirement in Option A is satisfied by other means; certification by an approvals body is required to demonstrate that in the event of the stored water going over temperature, the heat input to the cylinder is isolated by physical means and is non self resetting.
These systems should be clearly identified with reference to the approvals body. (See Note 2)
Note 1 : Whilst most solar cylinders use a coil type heat exchanger other options such as external plate to plate devices , external annulars or ‘tank in tank’ systems may be used but the same control options always apply.

Note 2 : Current approved bodies include the British Board of Agrement (BBA) , WRc-NSF Limited, or KIWA

3.4 Cold Water Supply

The strainer prevents any debris entering the other controls. The pressure reducer ensures the correct operation of the expansion vessel, and prevents any damage to the control valves through too great a pressure.
The non-return valve ensures the water expansion is forced into the expansion vessel and prevents contamination of the mains cold water supply. The expansion relief valve will discharge expanded water to the discharge tundish if the expansion vessel fails.

3.6 Siting and Fixing

It is important to ensure that the cold water main is capable of supplying the increased demand which will be imposed on it. Hot and cold water are both drawn off the same source of supply. Remember, there will not be a storage tank to help compensate for variations in the demand on the system.

A minimum dynamic pressure of 1.5 bar or 20 litres per minute is required for satisfactory operation. 85% of UK dwellings have a mains pressure above 2.0 bar.
Note: THE MAINS WATER SUPPLY MUST NOT EXCEED 16 BAR.

The cylinder should be left packed until it is time to install. When unpacking the appliance follow the guidelines within the packaging and take care not to damage the temperature and pressure relief valve.

The cylinder may be installed in any convenient position. As it is connected to the mains cold water supply, it is equally effective on any floor, however, consideration must be given to allow ease of access for maintenance purposes.

Additionally, do not install the unit in premises which may be subject to freezing.

Ensure that the floor load bearing strength is adequate to take the weight of the cylinder when full of water (see **Table 1**).

The ST50, ST80 and ST100 *ProTech* models are wall mounted. All other models are free standing. These are supplied with feet which are attached to the heater via self-tapping screws which are also supplied.

All units must be installed in the VERTICAL POSITION.

For maintenance purposes leave at least 500 mm free space in front of the unit, for access.

Important: In the event that the installation of this cylinder wil require a third sensor to be fitted (i.e. Solar) the following actions will be necessary:

Replace one of the thermostat pockets supplied with the indirect thermostats in the Unvented Kit with the elongated thermostat pocket also supplied.

This thermostat and pocket must now be fitted to the top thermostat connection.

Please also refer to Section 2.3 General Guidance **Options A and B** (page 5) of this manual.

For further technical advice, please contact the Ariston Technical Advice Line on 0870 241 8180.

3.7 Overall Dimensions

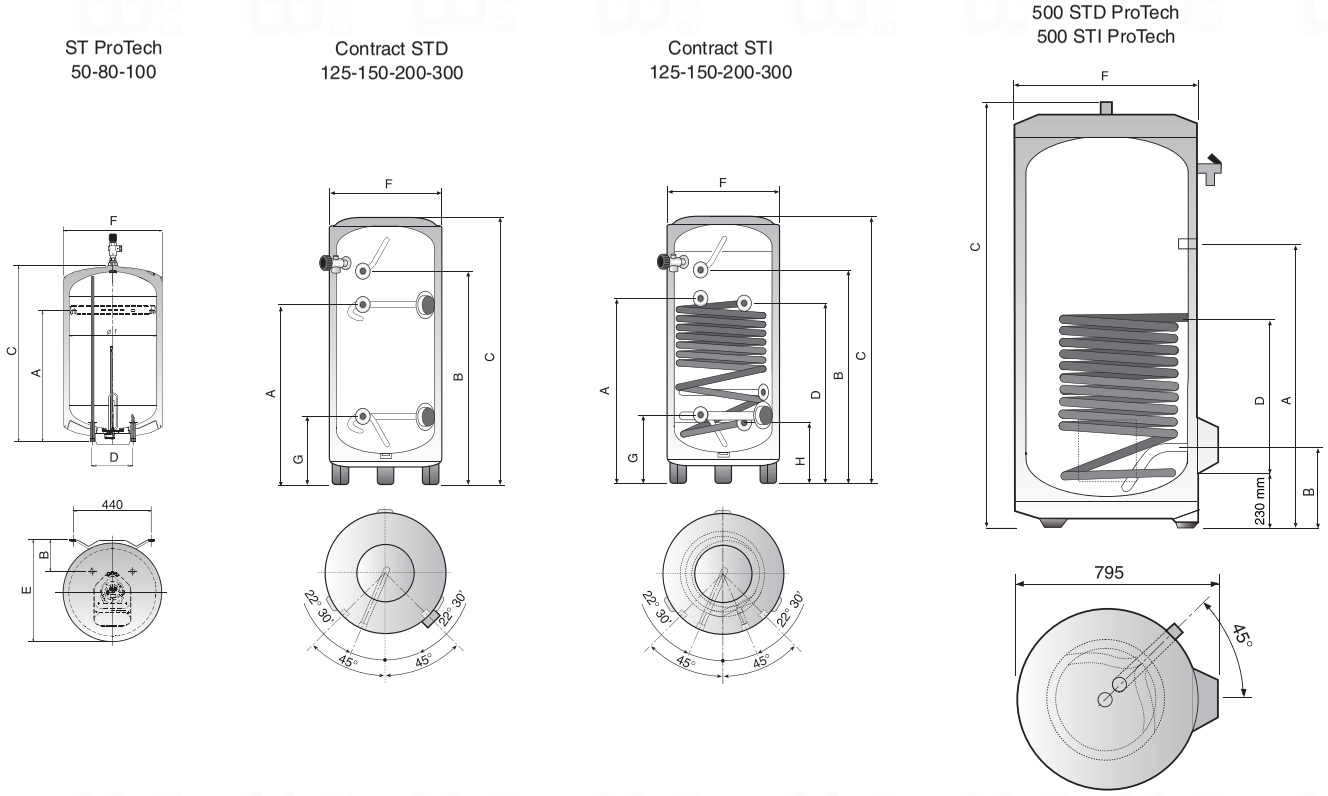

Table 1

Model	Storage Capacity	Units Pipe Size Inlet Outlet	Coil Surface m²	Dimensions in mm A	B	C	D	E	F	G	H	I	J	Weight When Full Kg
DIRECT RANGE														
Wall-hung														
ST 50 ProTech	50 l	1/2"	-	410	120	580	160	475	460	-	-	-	-	77
ST 80 ProTech	75 l	3/4"	-	590	175	740	230	475	460	-	-	-	-	115
ST 100 ProTech	100 l	3/4"	-	550	175	700	230	575	560	-	-	-	-	141
Floor Standing														
Contract STD 125	125 l	3/4"	-	650	747	1015	-	-	505	265	-	-	-	129
Contract STD 150	150 l	3/4"	-	790	905	1165	-	-	505	265	-	-	-	158
Contract STD 210	200 l	3/4"	-	940	1221	1495	-	-	505	265	-	-	-	190
Contract STD 300	300 l	3/4"	-	1210	1551	1795	-	-	505	265	-	-	-	245
500 STD ProTech	495 l	1"	-	1390	335	1870	-	-	714	-	-	-	-	625
INDIRECT RANGE														
Contract STI 125	125 l	3/4"	0.75	650	747	995	625	-	505	265	225	-	-	166
Contract STI 150	150 l	3/4"	0.9	790	905	1155	765	-	505	265	225	-	-	201
Contract STI 210	200 l	3/4"	0.9	940	1221	1475	765	-	505	265	225	-	-	256
Contract STI 300	300 l	3/4"	0.9	1210	1555	1790	815	-	560	275	255	-	-	395
500 STI ProTech	495 l	1"	1.5	1390	335	1870	700	-	714	-	-	-	-	641

PRIMO ITD
100-125-150-175-200-250-300

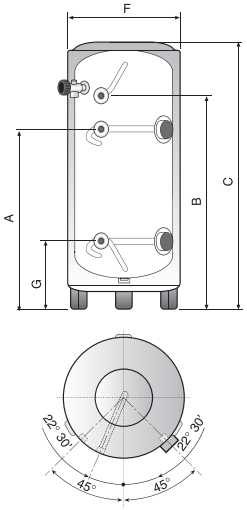

PRIMO ITI
100-125-150-175-200-250-300

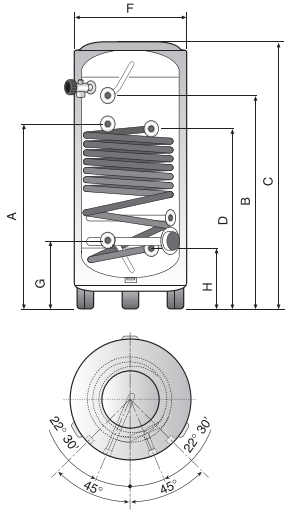

PRIMO ITSI
210-250-300

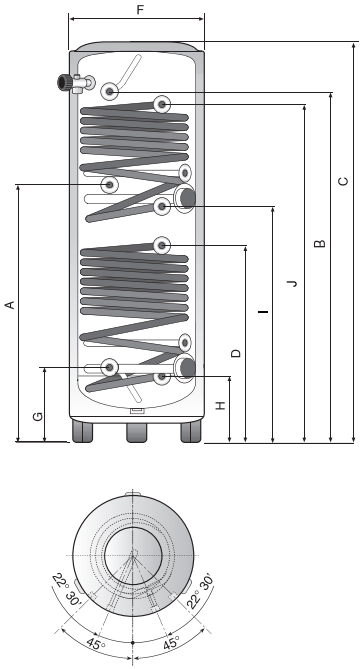

TABLE 1

Model	Storage Capacity	Units Pipe Size	Coil Surface m^2	Dimensions in mm										Weight When Full Kg
		Inlet Outlet		A	B	C	D	E	F	G	H	I	J	
DIRECT RANGE														
PRIMO ITD 100	100 l	3/4"	-	492	589	845	-	-	505	265	-	-	-	122
PRIMO ITD 125	125 l	3/4"	-	650	747	1015	-	-	505	265	-	-	-	156
PRIMO ITD 150	150 l	3/4"	-	790	905	1165	-	-	505	265	-	-	-	183
PRIMO ITD 175	175 l	3/4"	-	869	1063	1335	-	-	505	265	-	-	-	208
PRIMO ITD 210	200 l	3/4"	-	940	1221	1495	-	-	505	265	-	-	-	239
PRIMO ITD 250	250 l	3/4"	-	990	1316	1555	-	-	560	270	-	-	-	297
PRIMO ITD 300	300 l	3/4"	-	1210	1551	1795	-	-	560	270	-	-	-	344
INDIRECT RANGE														
PRIMO ITI 100	100l	3/4"	0.5	492	589	845	555	-	505	265	225	-	-	123
PRIMO ITI 125	125l	3/4"	0.67	650	747	1015	625	-	505	265	225	-	-	155
PRIMO ITI 150	150l	3/4"	0.80	790	905	1165	765	-	505	265	225	-	-	180
PRIMO ITI 175	175l	3/4"	0.80	869	1063	1335	765	-	505	265	225	-	-	211
PRIMO ITI 210	200l	3/4"	0.90	940	1221	1495	765	-	505	265	225	-	-	238
PRIMO ITI 250	250l	3/4"	0.90	990	1316	1555	795	-	560	270	255	-	-	297
PRIMO ITI 300	300l	3/4"	0.90	1210	1551	1795	795	-	560	270	255	-	-	348
PRIMO ITSI 210 (top/bottom)	200l	3/4"	0.67/0.67	940	1221	1495	625	-	505	265	225	806	1206	238
PRIMO ITSI 250 (top/bottom)	250l	3/4"	0.67/0.67	990	1316	1555	655	-	560	270	255	876	1276	297
PRIMO ITSI 300 (top/bottom)	300l	3/4"	0.67/0.89	1210	1551	1795	795	-	560	270	255	1111	1511	349

3.8 Connection of Mains Water Supply

For floor standing models:
On the front of the unit there is a label to identify the connection ports. Please check this before making any connection to the unit.

For units up to 300 litres it is recommended that all mains cold water supply pipe work is a minimum of 22mm, with the exception of model ST 50 *ProTech* where 15mm can be used. For 500 litre models the supply should be 28mm. An isolating valve should be installed between the cold water supply and the cylinder for servicing. ALL PIPEWORK MUST BE FLUSHED TO AVOID DAMAGE TO THE CONTROL VALVES.

Please refer to **Figs. 3.1 - 3.7** for a suggested installation layout.

Draining taps must be located in acessible postions to permit the draining of the whole cylinder. The taps must be a minimal size of at least 15mm nominal size (preferably 22mm), and manufactured in accordance with BS 2879:1980.

When installing the expansion vessel it can either be connected directly to the combination valve (see Figs 3.8 - 3.10), or it can be installed remotely using the flexible hose supplied.

Important Note:-
When installing the expansion vessel, **do not** install the expansion vessel vertically as air can become trapped in the expansion vessel resulting in potential vibrations through the cylinder and pipework. When using the flexible hose to remotely install the expansion vessel away from the control valve, again, ensure that the vessel is not installed in a vertical position where it can trap air.

See below for acceptable installation practices.

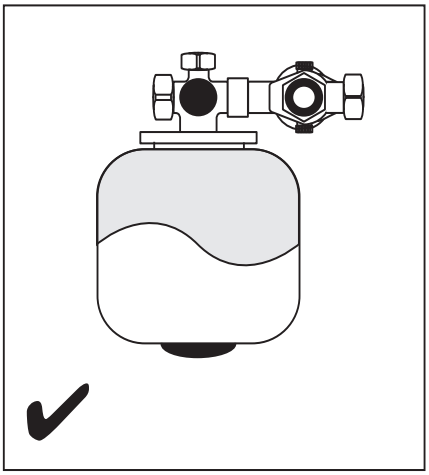

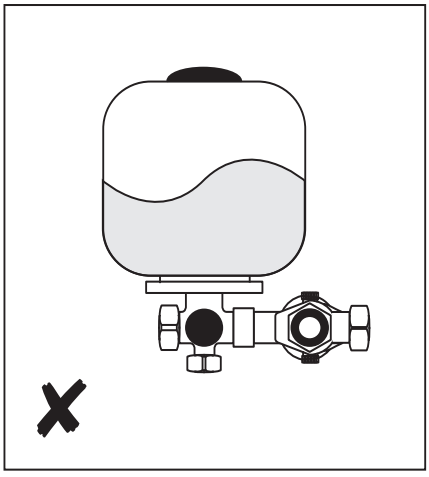

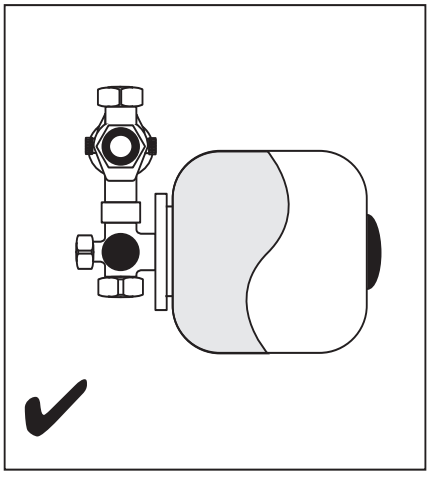

ST ProTech 50-80-100

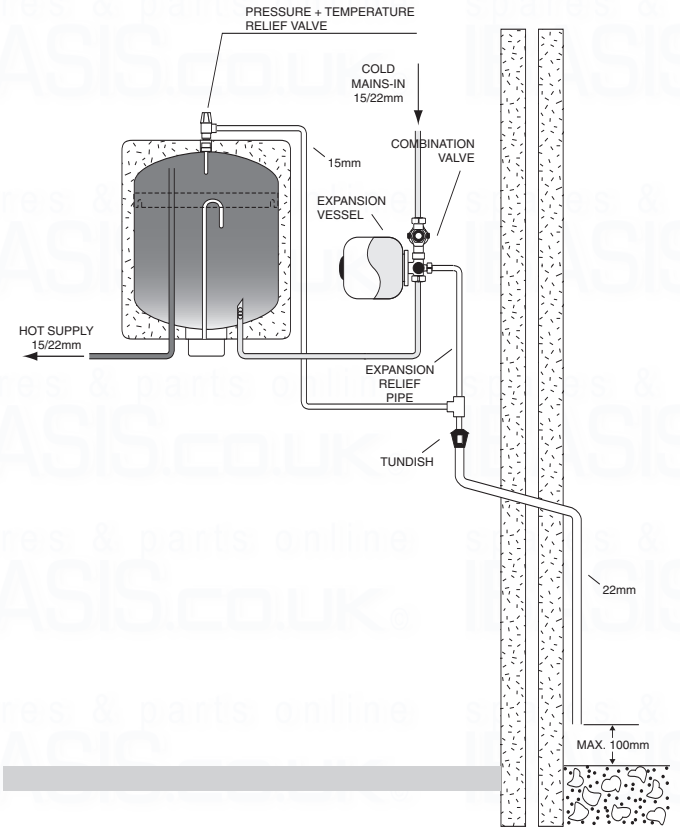

Fig. 3.1

STD 125-150-210-300 Direct
ITD 125-150-175-210-250-300 Direct

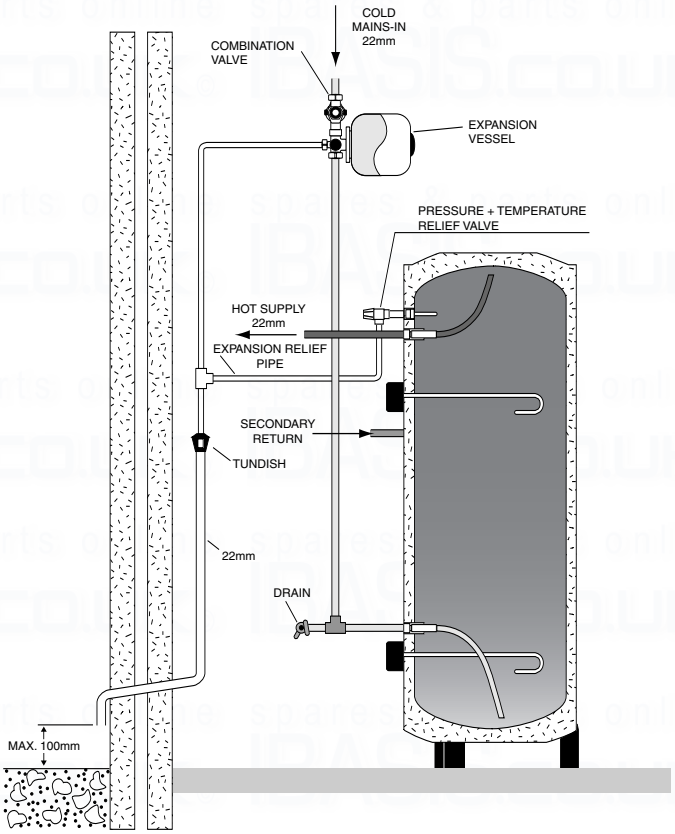

Fig. 3.2

STI 125-150-210-300 Indirect
ITI 100-125-150-175-210-250-300 Indirect

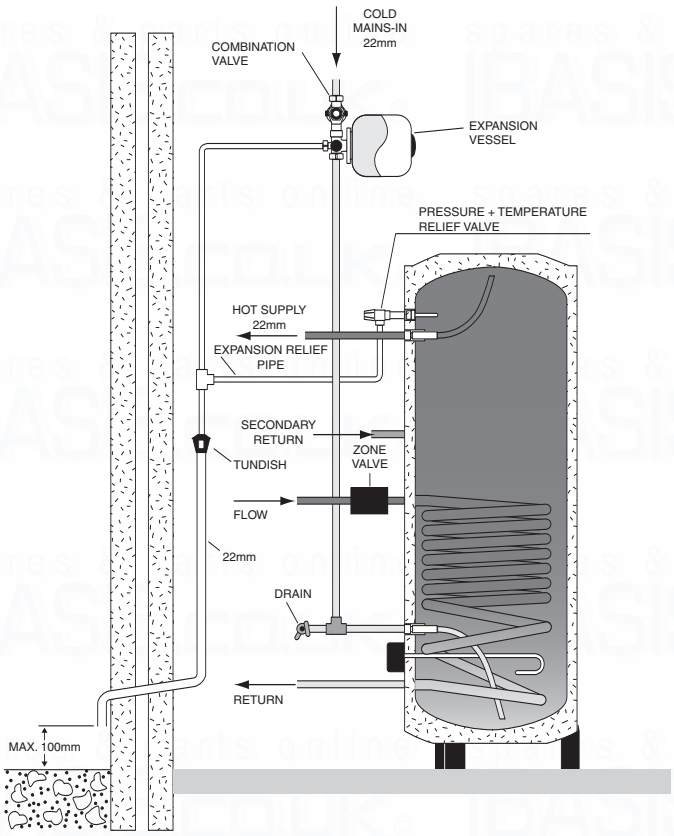

Fig. 3.3

ITSI 210-250-300 Twin Coil Indirect
(dual heat source)

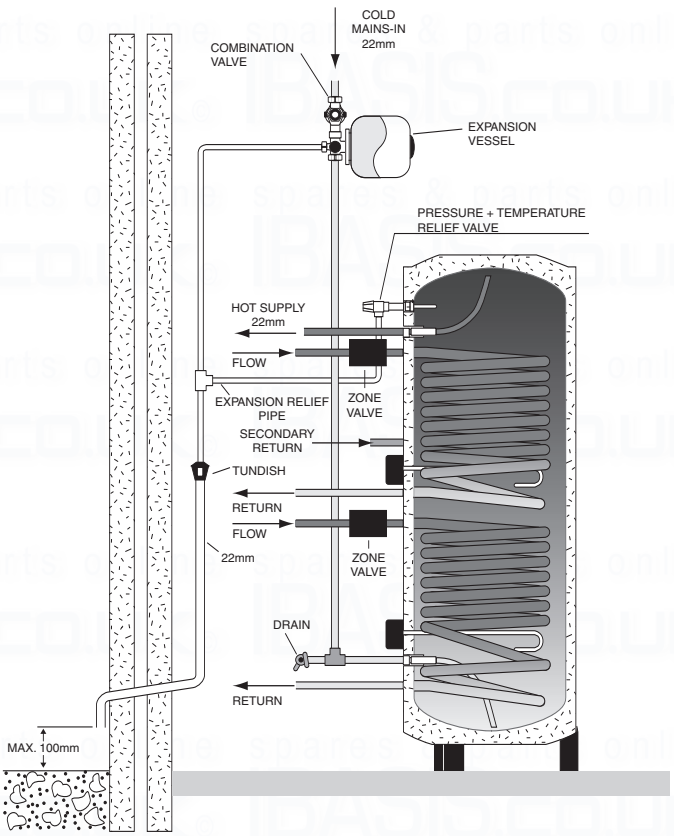

Fig. 3.4

Note: Flow and Return pipes may be connected in reverse to that shown in the diagrams for indirect cylinders.

ITSI 210-250-300 Indirect (linked coils)

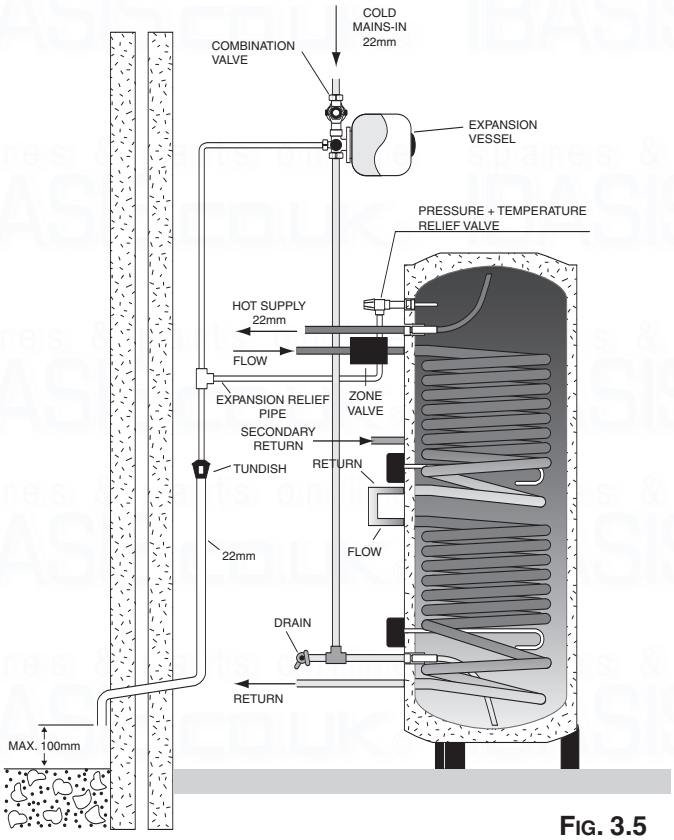

Fig. 3.5

500 STI ProTech

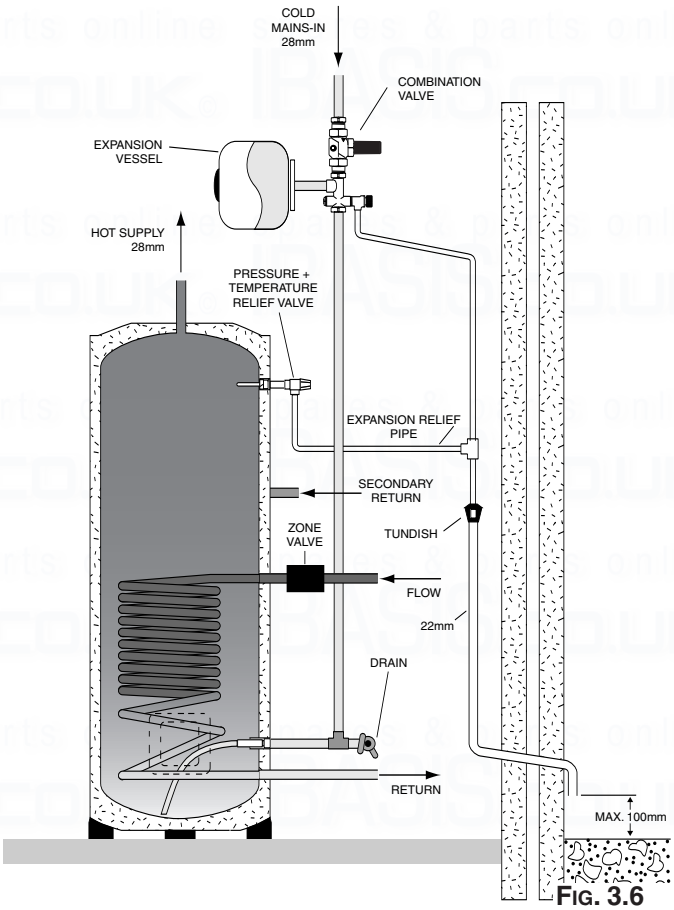

Fig. 3.6

500 STD ProTech

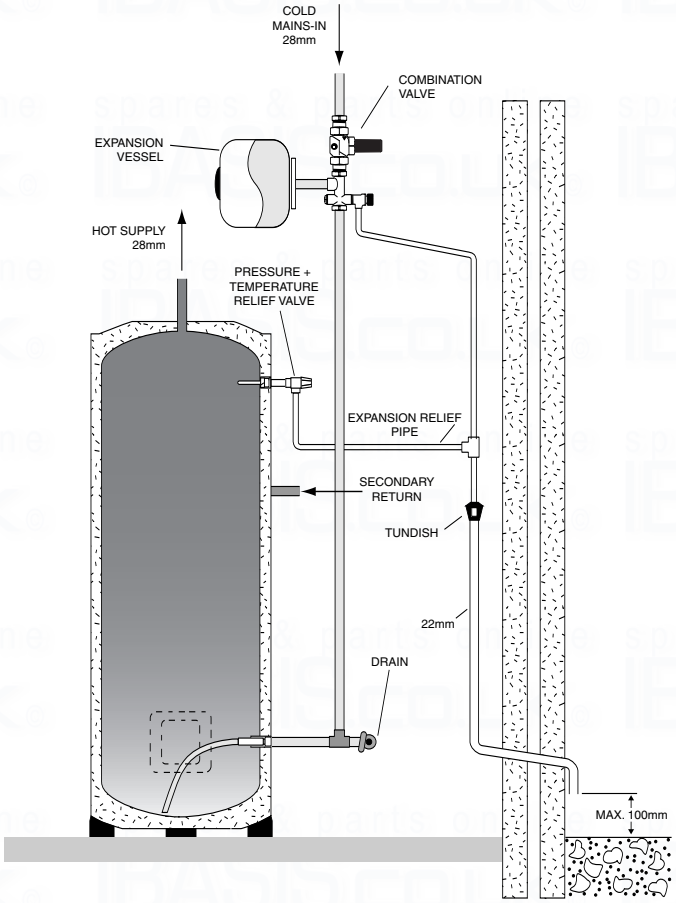

Fig. 3.7

3.9 Cold Water Combination Valve

The cold water combination valve may be fitted in close proximity to the cylinder, or alternatively, it may be separated to allow the pressure reducing valve where the mains supply enters the property allowing for balanced cold water throughout the whole property whilst the 6 bar safety valve is fitted in close proximity to the cylinder.

A balancing port is supplied on the 22mm valves (for units above 50 litres) and 28mm valves (for 500 litres units) allowing balanced cold water supply to the rest of the building giving constant results for mixer and shower valves. If the facility is not needed a plug is supplied. Refer to **Fig. 3.9** and **Fig. 3.10**

Although this facility is not built into the 15mm valve (supplied with model ST50), a tee piece may be inserted between the two components giving the same result. Refer to **Fig. 3.8**

Note!
There should be no other valves fitted between the cylinder and the expansion valve.

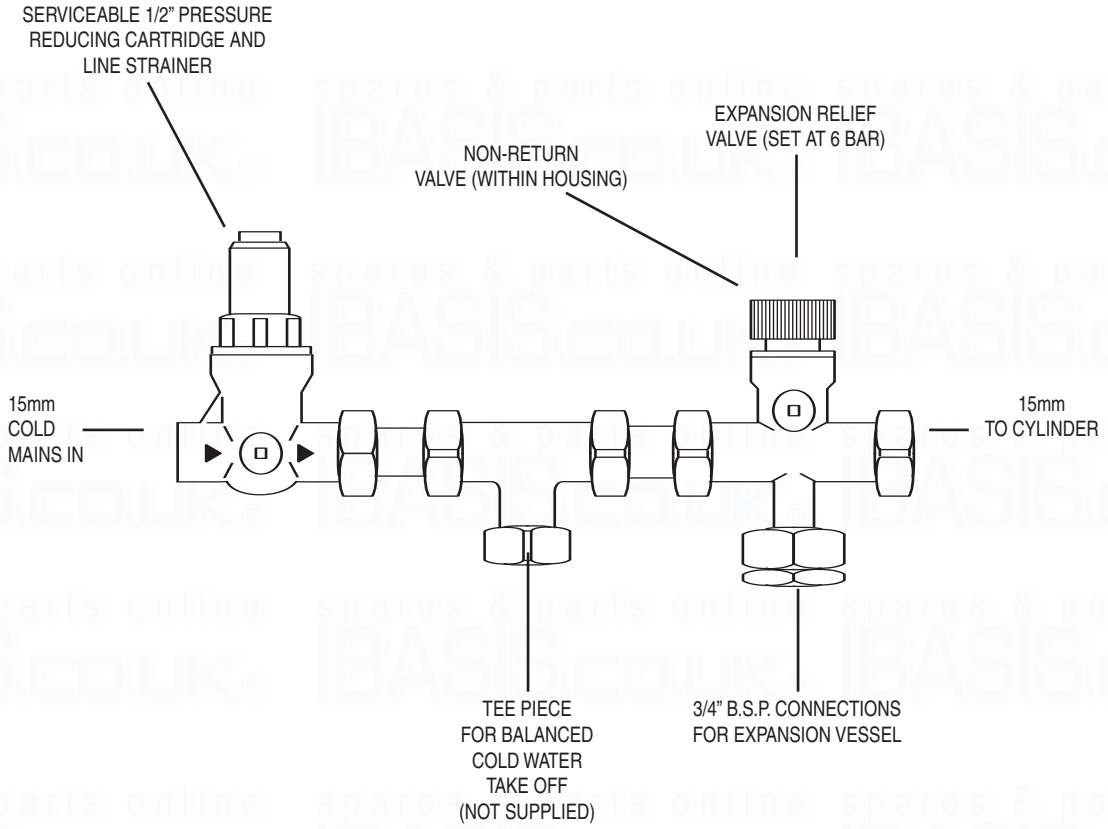

Fig. 3.8 *For Model ST 50*

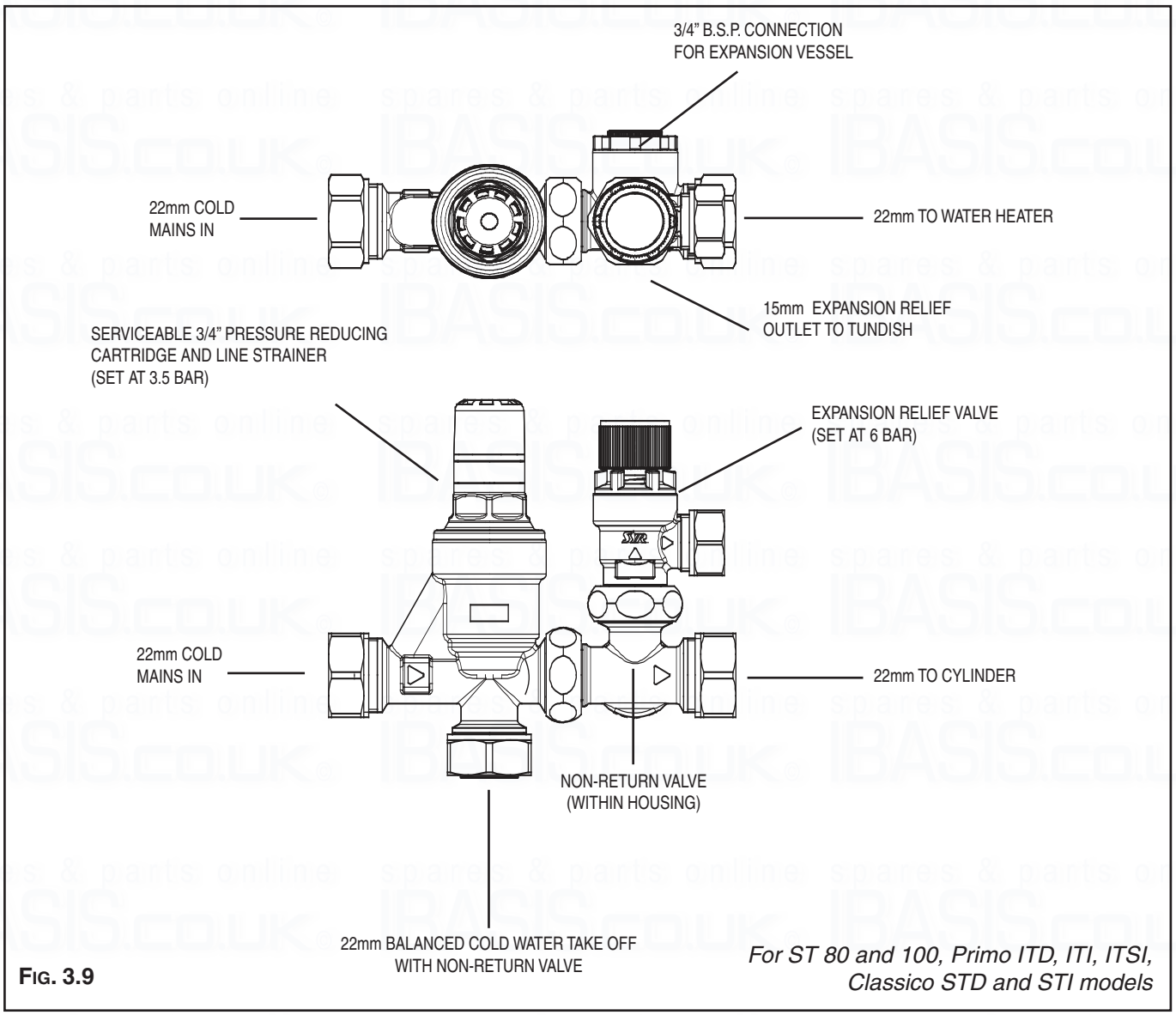

Fig. 3.9

For ST 80 and 100, Primo ITD, ITI, ITSI, Classico STD and STI models

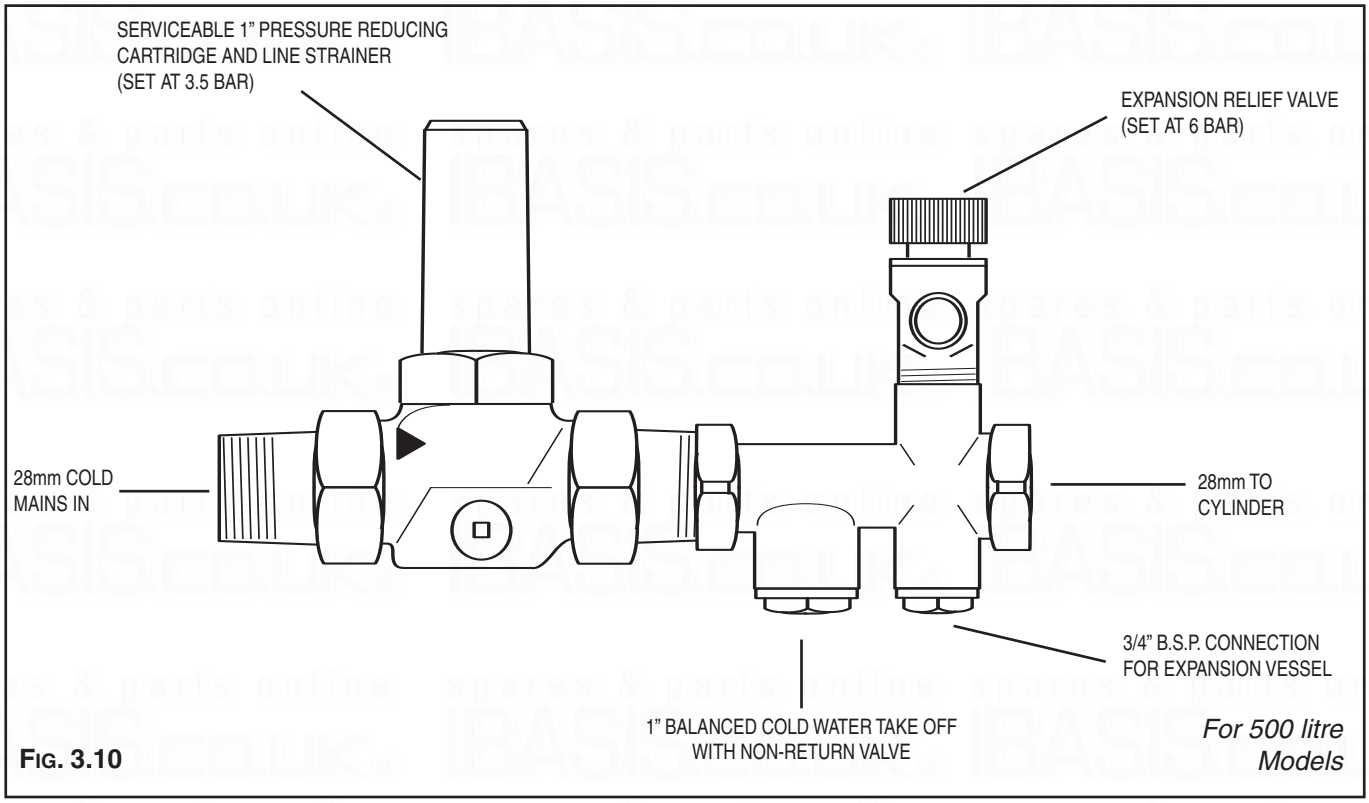

Fig. 3.10

For 500 litre Models

3.10 Connection to Services

It is recommended that a 22mm pipe run should supply the outlets throughout the building, especially to baths and showers. Short runs of 15mm pipe may be used to connect basins and sinks.

3.11 Secondary Return

On floor-standing models a secondary return may be fitted (consult the label on the face of the unit for the correct location). A non-return valve (not supplied) must be fitted to prevent back flow and a bronze pump will be needed in conjunction with a pipe thermostat and timer to circulate the hot water (both not supplied).
Note: an extra expansion vessel may be required where the additional volume of the secondary return exceeds the capacity of the expansion vessel supplied.

3.12 Discharge Pipework

Note!
The safety relief valves must not be used for any other purpose

1) Discharge pipes from the temperature & pressure relief and expansion relief valve may be joined together.

2) The tundish must be vertical and fitted within 500mm of the temperature & pressure relief valve and must be located with the cylinder but away from any electrical devices. The tundish must also be in a position visible to the occupants, and positioned away from any electrical devices. The discharge pipe from the tundish should of metal and terminate in a safe place where there is no risk to persons in the vicinity of the discharge.

3) The pipe diameter must be at least one pipe size larger than the nominal outlet size of the safety device unless it's total equivalent hydraulic resistance exceeds that of a straight pipe 9m long.
   i.e. Discharge pipes between 9m and 18m equivalent resistance length should be at least 2 sizes larger than the nominal outlet size of the safety device. Between 18m and 27m at least 3 larger, and so on.
   Bends must be taken into account in calculating the flow resistance.
   See **Fig. 3.11** and **Table 2**.

4) The discharge pipe must have a vertical section of pipe at least 300mm in length below the tundish, before any elbows or bends in the pipework.

5) The discharge pipe must be installed with a continuous fall and should be at least one pipe diameter clear of the wall where it terminates.

6) The discharge should be visible at both the tundish and the final point of discharge, but where this is not possible or practically difficult; there should be clear visibility at one or other of these locations. Examples of acceptance are:
   i) Ideally below a fixed grating and above the water seal in a trapped gully.
   ii) Downward discharges at a low level; i.e. up to 100mm above external surfaces such as car parks, hard standings, grassed areas etc. These are acceptable providing that where children may play or otherwise come into contact with discharges, a wire cage or similar guard is positioned to prevent contact, whilst maintaining visibility.
   iii) Discharges at high level; Onto a roof capable of withstanding high temperature discharges of water 3m from any plastic guttering systems that would collect such a discharge (tundish visible).
   iv) Where a single pipe serves a number of discharges, such as in blocks of flats, i.e. into a metal hopper and metal down pipe with the end of the discharge pipe clearly visible (tundish visible or not). the number served should be limited to not more than 6 systems so that any installation can be traced reasonably easily.

The single common discharge pipe should be at least one pipe size large than the largest individual discharge pipe to be connected. If unvented hot water storage systems are installed where discharges from safety devices may not be apparent i.e. in dwellings occupied by the blind, infirm or disabled people, consideration should be given to the installation of an electronically operated device to warn when discharge takes place.

Note: The discharge will consist of scalding water and steam. Asphalt, roofing felt and non-metallic rainwater goods may be damaged by such discharges.

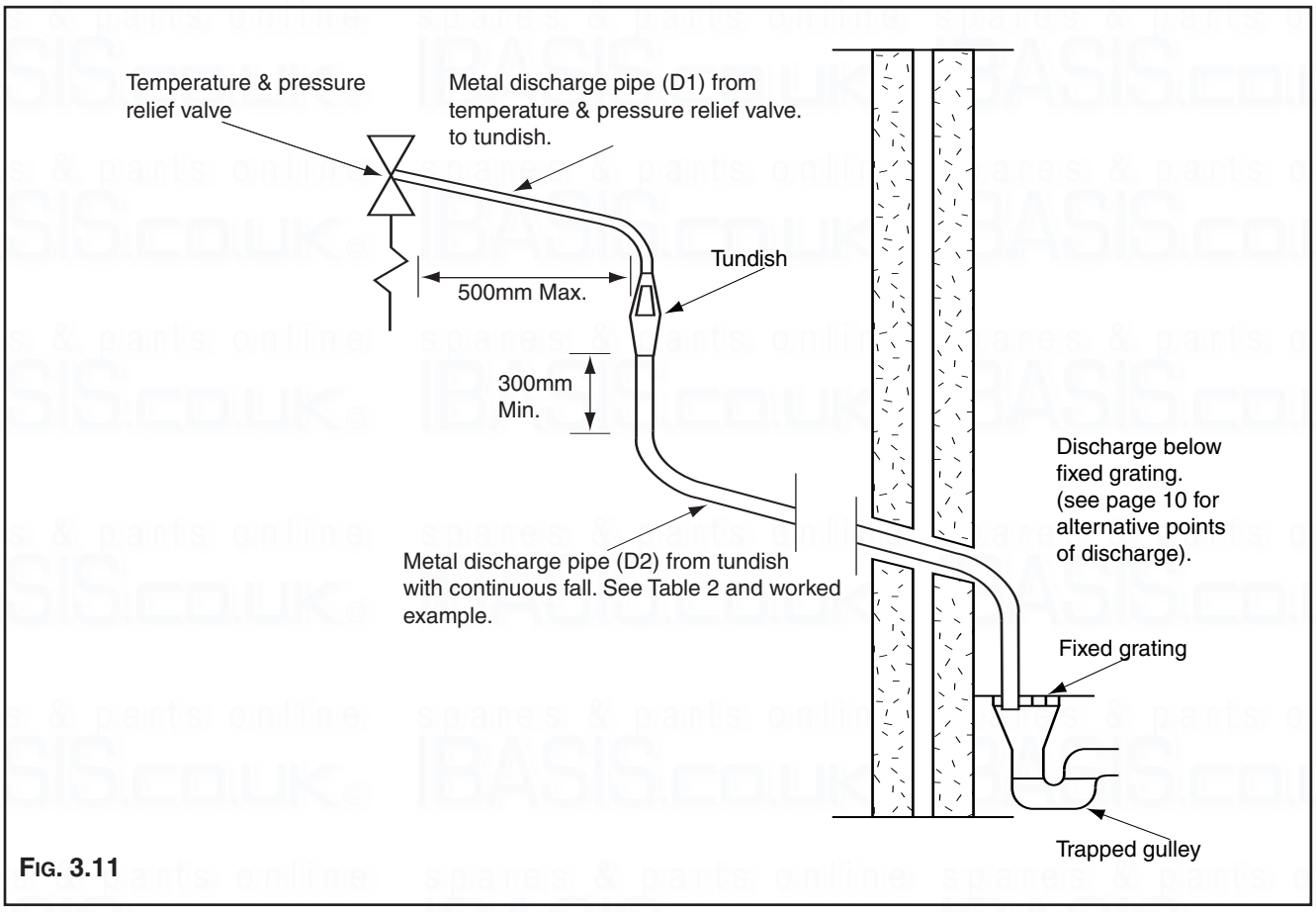

Fig. 3.11

Table 2. Sizing of copper discharge pipe "D2" for common temperature valve outlet sizes.

Valve outlet size	Minimum size of discharge pipe D1*	Minimum size of discharge pipe D2* from tundish	Maximum resistance allowed, expressed as a length of pipe (i.e. no elbow or bends)	Resistance created by each elbow or bend
G 1/2	15mm	22mm	Up to 9m	0.8m
		28mm	Up to 18m	1.0m
		35mm	Up to 27m	1.4m
G 3/4	22mm	28mm	Up to 9m	1.0m
		35mm	Up to 18m	1.4m
		42mm	Up to 27m	1.7m
G 1	28mm	35mm	Up to 9m	1.4m
		42mm	Up to 18m	1.7m
		54mm	Up to 27m	2.3m

WORKED EXAMPLE

The example below is for a G1⁄2 temperature & pressure relief valve with a discharge pipe (D2) having 4 no. elbows and length of 7m from the tundish to the point of discharge.

From **Table 2;**

Maximum resistance allowed for a straight length of 22mm copper discharge pipe (D2) from G1⁄2 temperature & pressure valve is 9m. Subtract the resistance for 4 no. 22mm elbows at 0.8m each = 3.2m. Therefore the maximum permitted length equates to: 5.8m. As 5.8m is less than the actual length of 7m therefore calculate the next largest size.
Maximum resistance allowed for a straight length of 28mm pipe (D2) from G1⁄2 temperature & pressure valve equates to: 18m. Subtract the resistance for 4 no. 28mm elbow at 1.0m each = 4m. Therefore the maximum permitted length equates to: 14m
As the actual length is 7m, a 28mm (D2) copper pipe will be satisfactory.

WARNINGS

The outlet from the temperature & pressure relief valve must not be used for any other purpose. This also applies to the expansion relief valve. No other valve is to be fitted between the cold water combination valve and the cylinder.

The temperature & pressure relief valve must not be removed in any circumstances. Any of the above will totally invalidate the guarantee.

3.13 Electrical Connection

The electrical installation must be in accordance with the current I.E.E. wiring regulations.

PROTECH ELECTRONIC ANTI-CORROSION SYSTEM (ST Range & 500 litre models only)

Important: The *ProTech* anti-corrosion system MUST be permanently connected to a fused non-switched 240V electricity supply see **Fig 3.12**.

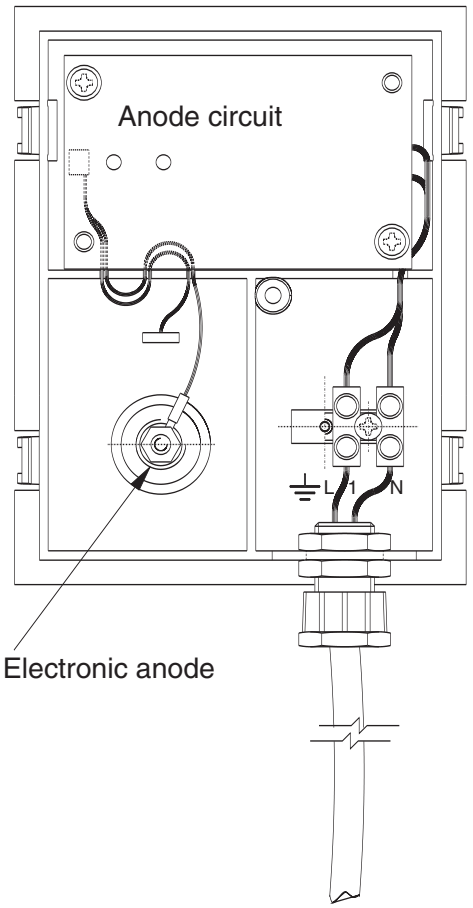

Fig. 3.12

The *ProTech* system, an exclusive solution, is an electronic anti-corrosion protection system which ensures maximum longevity of the appliance, regardless of water quality. The electronic circuit creates a difference in potential between the hot water tank and the titanium electrode, thereby guaranteeing optimum protection of the tank and preventing corrosion.

To ensure the proper operation of the protection system, **IT MUST BE PERMANENTLY CONNECTED TO A FUSED NON-SWITCHED 240V, 3A ELECTRICITY SUPPLY** even in the event of shut-down of the system. To prevent risk to the appliance's lifespan when disconnecting the protection system for an extended period of time, it is necessary to drain the appliance beforehand.

In addition to the 240V network, the electronic circuit is also connected to the tank, which is to be protected, and to the titanium protection electrode,

INFORMATION FOR THE END USER

Proper operation of the protection system is shown by a continuous green L.E.D, indicating that the circuits terminals are being supplied with electricity.

In the event of failure, a red L.E.D. indicates that there is a short-circuit between the electrode and the cylinder tank, that one of the leads (tank or electrode) is disconnected or that there is no water in the cylinder.

Your appliance is thus properly protected when the green L.E.D. is illuminated and the red L.E.D. is off. Should this not be the case, please contact your installer.

FITTING IMMERSION HEATER(S) (100 - 300 litre foor standing only)
These are supplied with but not fitted to 100 - 300 floor-standing models. A sealing gasket is supplied with each element, however the use of a suitable sealing compound is required to ensure a correct seal. Recommended sealants include Fernox LSX and similar silicone or liquid PTFE products. Care must be taken not to cross thread the immersion heater(s) when fitting. Each immersion heater is supplied with a regulation thermostat and manual reset thermal cut-out. This will activate if the regulation thermostat fails. Under no circumstances should this be by-passed. The immersion heaters supplied are rated at 3kW.

Note!
The immersion heaters must not be fitted without the thermostat/thermal cut-out.

DIRECT SYSTEMS
A mains supply of 240V, 3kW (13 amps) is required. Heat resistant cable, round 3 or 4 core 2.5mm^2 (to BS6141 table 8) must be used to connect the electrical supply through the Economy 7 time control switch using either system 'A' or 'B' as illustrated in **Fig. 3.11**.

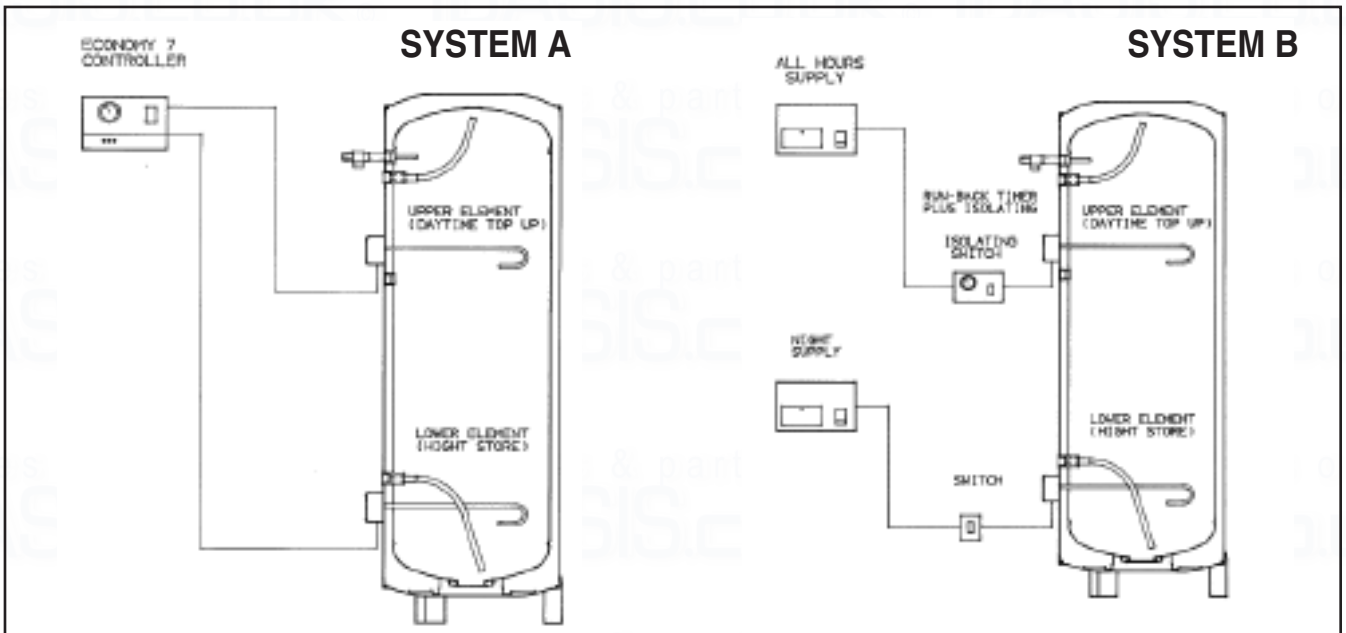

Fig. 3.13

3.14 Electrical Diagrams

Should the Economy 7 system not to be used, a separate 13 amp supply to each element will be required through a double pole fused isolating switch having a contact gap of at least 3mm on each pole.The immersion heater shall be installed with 85°C rubber insulated HOFR-sheathed flexible cable complying with Table 8 of BS 6141: 1991. Make the connection(s) to the immersion heater(s) as per **Fig. 3.14** and **Fig. 3.15**. For *High Capacity* 500 litre models see **Fig. 3.16** (page 20).

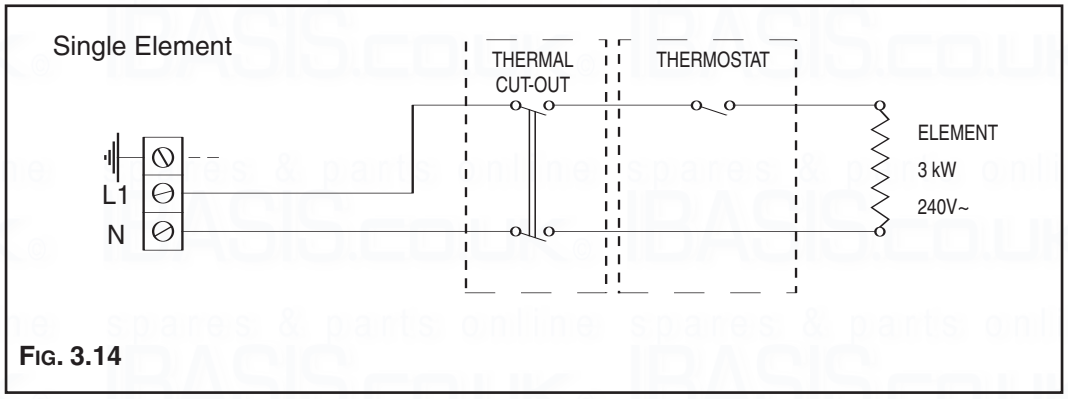

Fig. 3.14

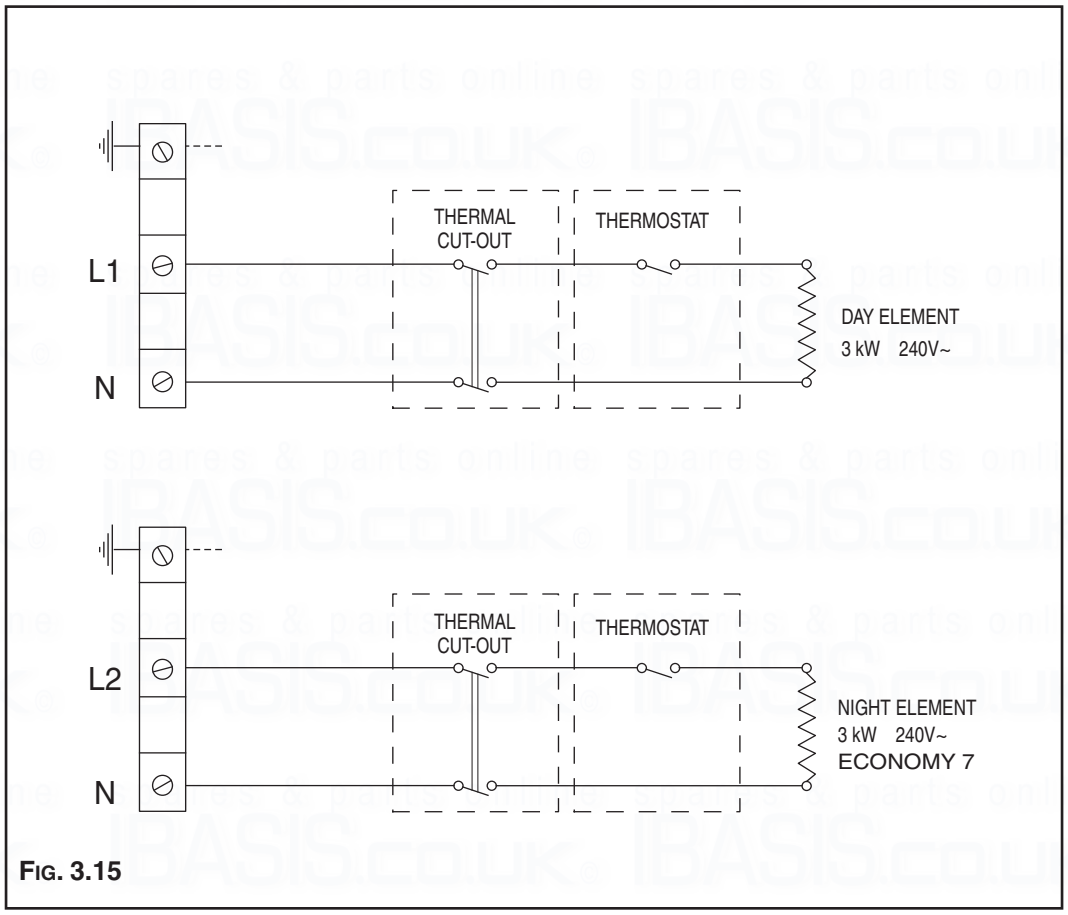

Fig. 3.15

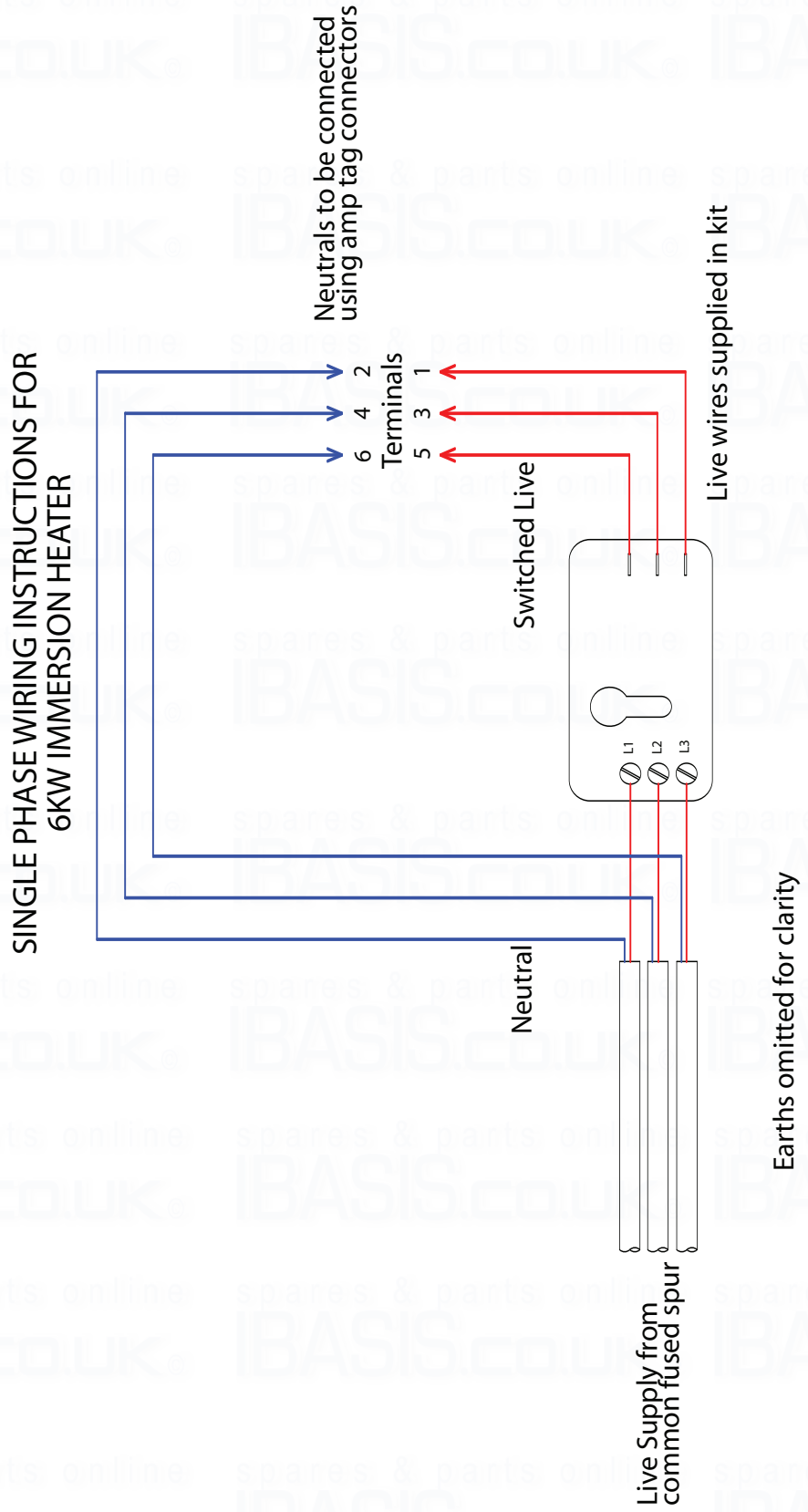

Fig. 3.16

Important: When wiring the 500 litre cylinders immersion heater ensure that a suitable heat resistant cable rated above the protective device is used (i.e. 6mm for 32Amp).

Wiring diagram for two 2 Port Valves with Ariston GENUS HE, CLAS HE and CLAS boilers with 2 zone clip in fitted.

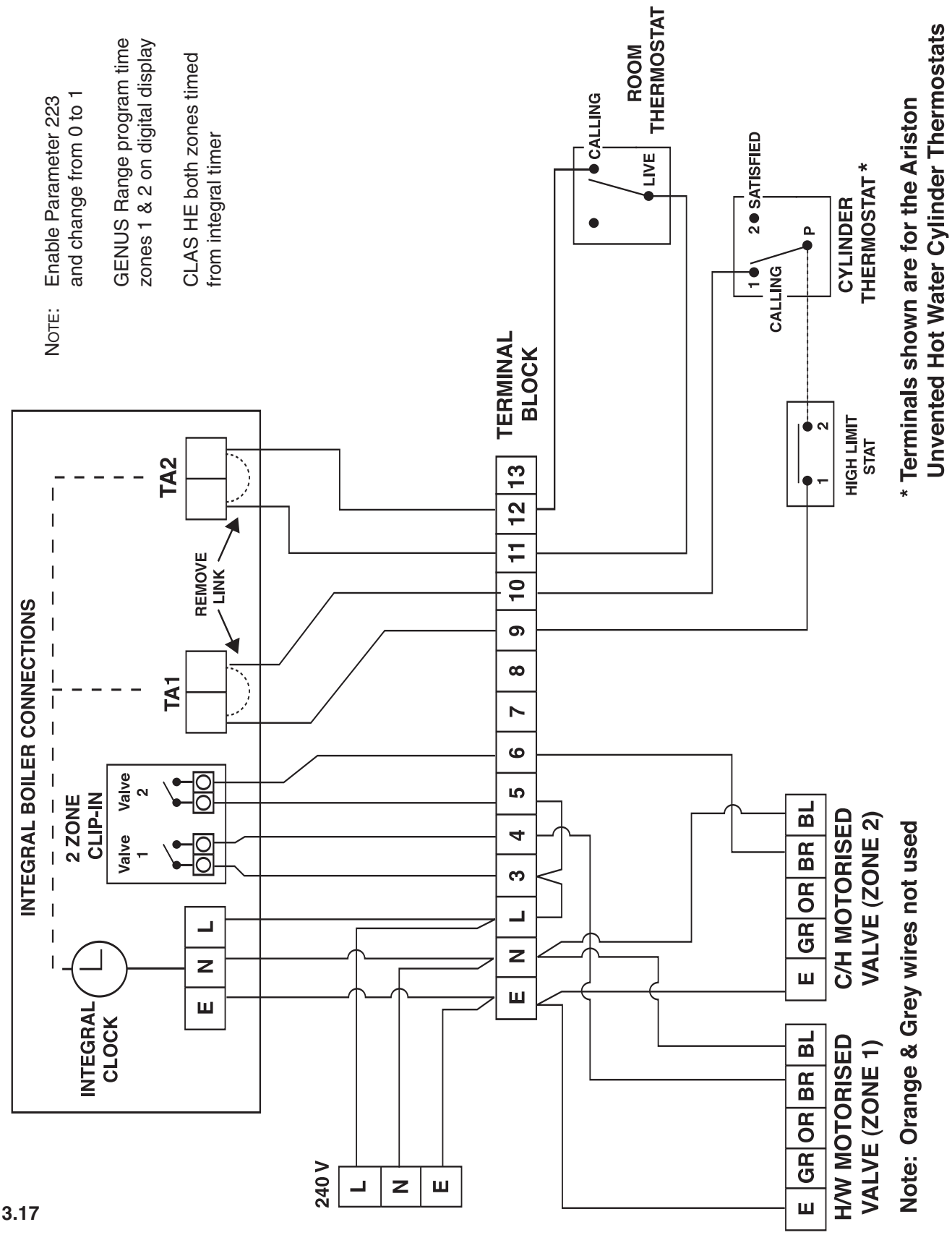

FIG. 3.17

NOTE: WITH REGARDS TO THE PRIMO ITSI CYLINDERS, FOR MORE DETAILED WIRING INSTRUCTIONS PLEASE CONTACT THE TECHNICAL DEPARTMENT ON 0870 241 8180.

Wiring diagram for two 2 Port Valves

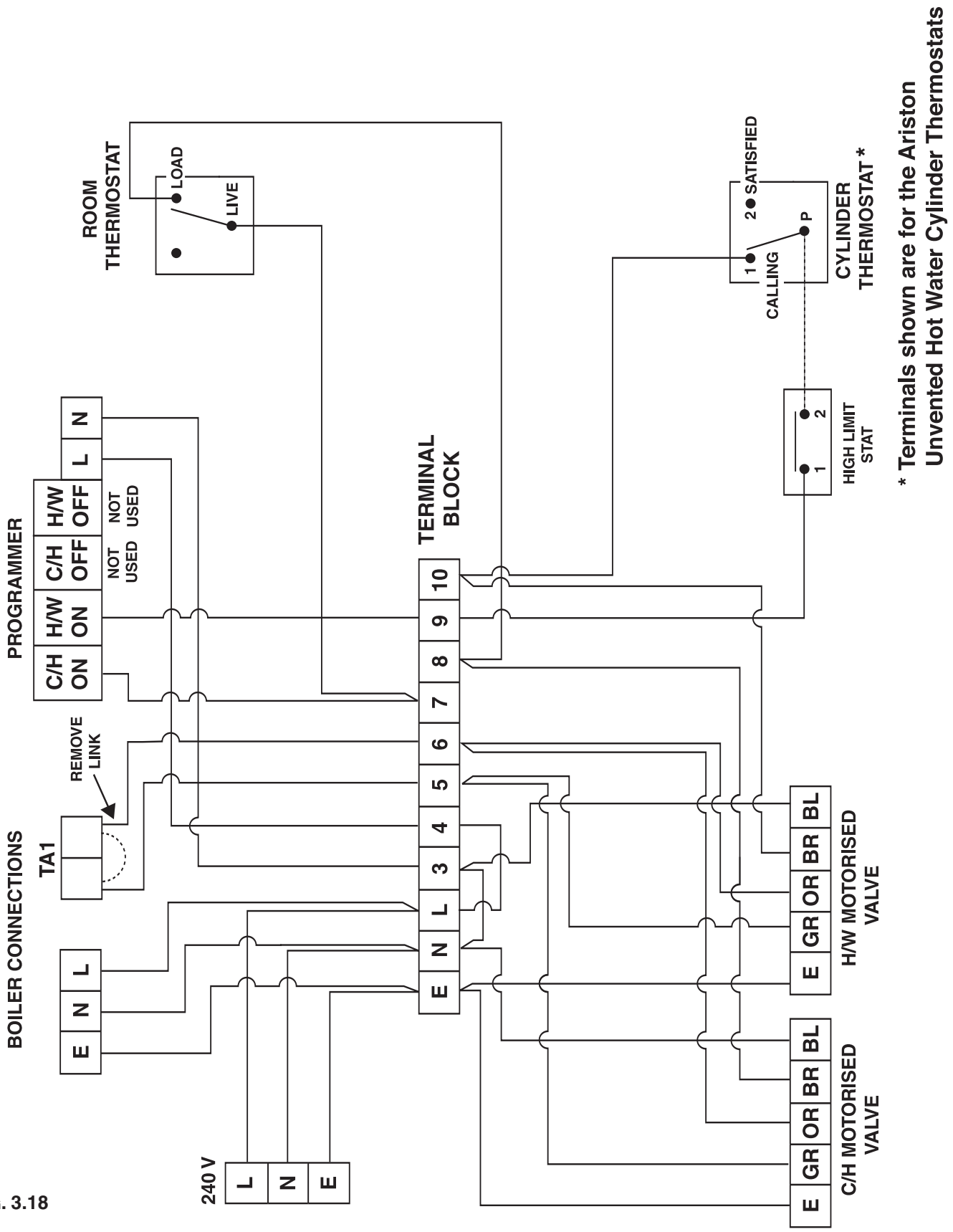

FIG. 3.18

NOTE: WITH REGARDS TO THE PRIMO ITSI CYLINDERS, FOR MORE DETAILED WIRING INSTRUCTIONS PLEASE CONTACT THE TECHNICAL DEPARTMENT ON 0870 241 8180.

Wiring diagram for a 3 Port Valve & 2 Port Valve

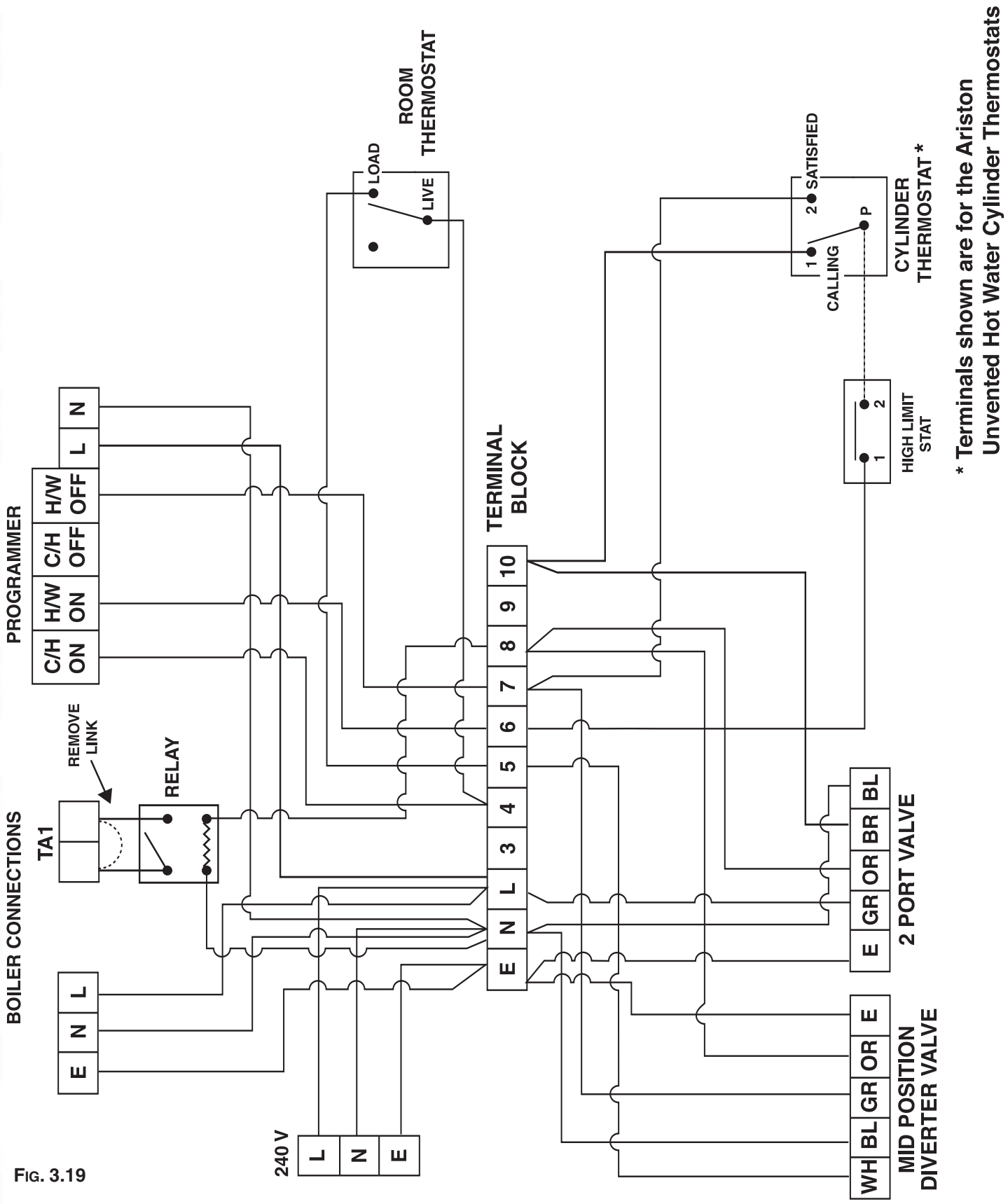

FIG. 3.19

4. COMMISSIONING

The thermostat(s) on the immersion heater(s) should be adjusted to trip at 60-65°C. This is the ideal temperature to prolong element life in hard water areas. Scale on the sheath builds up more rapidly at temperatures above this causing the element to overheat and premature failure can occur. Higher temperatures without additional controls would result in scalding. In known hard water areas the use of a scale inhibitor is also recommended.

In addition to the thermostat the thermal cut-out will switch power off to the element should the thermostat malfunction, causing an excessive rise in water temperature. The thermal cut-out can be reset manually after the fault has been corrected.

INDIRECT SYSTEMS

For models up to 300 litres a mains supply of 240V, 3kW (13 amps) will be required for the direct immersion heater. heat resistant cable, round 3 core 2.5mm^2 (to BS6141) must be used. For *High Capacity* 500 litre models consult the wiring diagram on the reverse of the inspection panel.

For indirect controls a 240V, 3 amp supply is required.

On floor standing models it is necessary to fit the thermostat using P.T.F.E tape (Please consult the label on the face of the unit for the correct location in both cases).

The cables must be clamped in position (as previously stated) and the control thermostat should be set at 60°C for the reasons above. In addition to the thermostat there is a thermal cut-out should the thermostat fail. Refer to **Fig. 3.15.**

WARNING : THE APPLIANCE MUST BE EARTHED.

The earth continuity conductor of the electrical installation must be effectively connected to all exposed parts of other appliances and services in the room in which the water heater is to be installed and conform to the I.E.E. wiring regulations.

Note: Do not switch on the immersion heater or fire the boiler until the cylinder is full of water.

Check for obvious signs of damage to the cylinder and controls, and also that the controls fitted correspond with the references quoted in these instructions.

Ensure that the drain cock at the base of the appliance is closed before commencing.

1) *ProTech* Models Only. Ensure that the *ProTech* anti-corrosion system is connected to the electrical supply;

2) Ensure that the line strainer (situated in the pressure reducing valve) is clear of installation debris and clean if necessary;

3) Check that the pressure in the expansion vessel is the same as the incoming water pressure;

4) Open all outlet taps;

5) Turn on mains water supply and allow the water heater to fill;

6) Ensure that the hot water system is flushed in accordance with BS 6700;

7) Close taps in turn after having purged the system of air;

8) Check for leaks around the controls and immersion heaters and again after the unit has heated up;

9) Check that no water is passing to waste through the relief valves;

10) Test the operation of the temperature & pressure relief and expansion valves by lifting/turning the manually operated test lever/cap and observing that water flows through freely and safely to waste;

11) Check that the discharge pipe is plumbed so that it falls continuously and that no taps, valves or other shut off devices are installed in the pipe;

12) Check that all thermostats are set at approximately 60-65°C;

13) DIRECT UNITS. Switch on immersion heater(s) and allow unit to heat up. Check operation of thermostat(s);

14) INDIRECT UNITS. Fill the indirect (primary) circuit following the boiler instructions. Switch on the boiler, ensure that the programmer is in the domestic hot water position. Allow unit to heat up and check operation of indirect thermostat on motorised valve(s);

15) Check the temperature of the hot water at the nearest outlet and record in the Benchmark Log Book;

16) Demonstrate operation to user, including operation of temperature & pressure relief valve and what to do if it operates;

17) Give this manual along with the completed Benchmark Log Book to the user to retain for future reference and make the customer aware that periodic checks of the equipment are essential for safety.

5. MAINTENANCE

To ensure efficient and safe operation, and to maintain the warranty, it is necessary to ensure the appliance is serviced annually by a competent person.

Before servicing, preliminary electrical system checks must be carried out to ensure electrical safety (i.e. polarity, earth continuity, resistance to earth and short circuit).

5.1 ProTech Anti-corrosion System

WARNING: SWITCH OFF THE POWER SUPPLY BEFORE WORKING ON THE APPLIANCE.

Trouble-shooting:

1) The green L.E.D. is NOT on:
   - Check to see that the circuits electric plug is connected (if not, connect);
   - Check to see that the P.C.B, is supplied with electricity (if not, replace the supply cable);
   - Check to see that 230 V electricity is supplied (if not, ensure that 230 V is supplied);
   - If all these checks fail to locate the problem, replace the electronic circuit (installer).
2) The red L.E.D. is on:
   - Check to see that the tank is filled with water (if not, fill it before carrying out the following checks);
   - Check to see that the clip-on circuit connector is in the proper position (if not, position correctly);
   - Check to see that the electrodes connection lead is property connected (to check this, gently pull on it) (if not, replace the electrode);
   - Check to see that the connection lead to the tank is properly connected to the tank (if not, connect properly); .
   - Check to see that the two leads from the clip-on circuit connector are not damaged, stripped, etc. (if so, replace the electrode);
   - If all these checks fail to locate the problem, replace the electronic circuit.

Note: To replace the P.C.B, there is no need to drain the cylinder;

1) Disconnect the two supply cables from the P.C.B. to the supply terminal;
2) Disconnect the clip-on circuit connector and polarising slot which connects the circuit to the tank and the electrode;
3) Disconnect the P.C.B. from its supporting plate (plastic clips in the 4 corners) and;
4) Replace the defective circuit with a new one, then re-install in reverse order to the above.

5.2 Thermal Cut-out(s)

If the thermal cut-out has operated the cause must be found before resetting (see section 6).

5.3 Immersion Heater(s)

Should the immersion heater(s) become scaled, we would recommend that the immersion heaters be replaced, a scale reducer be fitted on the cold water supply to the cylinder and that the thermostat is set below 60°C to prevent further scale formation.

5.4 Unvented Controls

Check controls as per the following:

1) Line strainer - with the water supply turned off remove screen from strainer and clean off any debris;
2) Expansion vessel - with the water supply turned off and taps open, check expansion vessel pressure and top up as necessary;
3) Temperature & pressure relief valve - with the water supply turned on, check manually by lifting the test lever/turning the test knob (ensure valve

closes after testing);
4) Expansion relief valve - check manually by turning the test knob (ensure valve closes after testing);
5) Discharge pipes (D1) - from both temperature & pressure relief and expansion relief valve for obstructions;
6) Tundish & discharge pipe (D2) - open either valve gradually to produce a full bore discharge into tundish and D2 without any back pressure;
7) Pressure reducing valve - check that the correct outlet pressure is being maintained by recording the pressure at an in-line terminal fitting e.g. tap.

5.5 Thermostats

Ensure that all thermostats are adjusted for the correct temperature setting, this should be between 60 and 65°C.

5.6 Maintenance Procedure

To ensure efficient and safe operation, and to maintain the warranty, it is necesary to ensure the appliance is serviced annually by a competent person.

After servicing, preliminary electrical system checks must be carried out to ensure electrical safety (i.e. polarity, earth continuity, resistance to earth and short circuit).

To drain the cylinder it is necessary to proceed as follows:

1) Close the mains supply service valve;
2) Open hot water taps;
3) Attach a hose and open the drain cock and allow the cylinder to empty.

Magnesium Anodes (STD and STI models only)

No longer than every 12 months, the installer should check the magnesium anti-corrosion anodes (consult the label on the face of the unit for the correct location). Assessment of the condition of the bottom anode (where fitted) can be made by judging the condition of the top anode.

Removal of anodes;

1) Close the mains supply service valve;
2) Open hot water taps;
3) Attach a hose and open the drain cock and allow the cylinder to empty;
4) The anodes are removed by unscrewing;

EXAMINE THE ANODES AND IF THE DIAMETER IS LESS THAN 10mm replace both anodes.

The use of an approved P.T.F.E. sealing tape is required to ensure watertight connection for anodes.

Thermal Cut-out(s)

If the thermal cut-out has operated the cause must be found before resetting.

Immersion Heater(s)

Should the immersion heater be scaled, we would recommend it be replaced.

Unvented Controls(s)

Check controls as per the following:

1) Line strainer - with the water supply turned off remove screen from strainer and clean of any detritus;

2) Expansion vessel - with the water supply turned off and taps open, check expansion vessel pressure and top up as necessary;

3) Temperature & pressure relief valve - with the water supply turned on, check manually by lifting the test lever/turning the test knob (ensure valve closes after testing);

4) Expansion relief valve - check manually by turning the test knob (ensure valve closes after testing);

5) Discharge pipes (D1) - from both temperature & pressure relief and expansion relief valve for obstructions;

6) Tundish & discharge pipe (D2) - open either valve gradually to produce a full bore discharge into tundish and D2 without any back pressure;

7) Pressure reducing valve - check that the correct outlet pressure is being maintained by recording the pressure at an in-line terminal fitting i.e. tap.

Thermostats

Ensure that all thermostats adjusted for the correct temperature setting, this should be between 60 and 65°C.

After servicing, complete all relevant sections of the Benchmark Checklist located on page 35 of this manual.

NOTE!
WHERE THERE IS A POSSIBILITY OF SCALE FORMING, IT IS RECOMMENDED THE THERMOSTAT BE SET TO BELOW 60°C AND A SCALE REDUCER BE FITTED ON THE INCOMING MAINS SUPPLY

6. FAULT FINDING

FAULT	POSSIBLE CAUSES	REMEDY
NO HOT WATER FLOW	1) Mains cold water supply shut off	Check and open Isolating and/or stop valve. Check water, Local Water Authority
	2) Line strainer blocked	Turn off mains water supply, remove line strainer and clean
	3) Cold Water Combination valve fitted incorrectly	Check direction of flow arrows on valve, refit in correct position if necessary
REDUCED FLOW RATE	1) Low mains water pressure	Check pressure, consult Local Water Authority if necessary
	2) Line strainer partially blocked	Turn off mains water supply, remove line strainer and clean
	3) Size of service pipe too small	Increase to size stated on page 9
WATER FROM HOT TAPS IS COLD	1) Direct immersion heater is not switched on	Check immersion heater, switch on if necessary
	2) Direct thermal cut-out has operated	Test thermostat operation and wiring, if faulty, correct/replace. Reset cut-out
	3) Boiler programmer set to central heating only (Indirect models)	Check switch on domestic hot water if necessary
	4) Boiler is not functioning (Indirect models)	Check boiler operation, if fault suspected consult manufacturer's instructions
	5) Indirect thermal cut-out has operated	Test thermostat operation and wiring, if faulty, correct/replace. Reset cut-out
	6) Motorised valve jammed or not wired correctly (Indirect models)	Check wiring and operation of motorised valve correct/ replace as necessary
DISCHARGE FROM PRESSURE/ TEMPERATURE RELIEF VALVE	1) Pressure above 7 bar, failure of pressure reducing valve. Temperature above 90°C failure of thermal control	Shut down boiler or immersion heater. Check pressure reducing valve and thermal controls. Replace if necessary
DISCHARGE FROM EXPANSION VALVE	1) Continually. Pressure reducing valve faulty	Check pressure from valve. Replace if over 3.5 bar
	2) When heater is heating. Faulty expansion vessel or lost charge	Check charge of vessel. Re-charge vessel to 3.5 bar or match incoming mains pressure replace if necessary
	3) Back feed of high mains pressure via mixer.	Service / replace mixer
WATER HAMMER	1) Expansion Vessel fitted vertically.	Ensure vessel is fitted horizontally or connection at top.
	2) Pipework not secure	Clip pipework
	3) Jumpers on taps loose	Replace tap jumpers

7. TECHNICAL DATA

		ST ProTech 50	ST ProTech 80	ST ProTech 100	Contract STD 125	Contract STD 150	Contract STD 210	Contract STD 300	Contract STI 125	Contract STI 150	Contract STI 210	Contract STI 300	High Capacity 500 STD UK	High Capacity 500 STI UK
Maximum Water Supply Pressure*	bar	12	12	12	12	12	12	12	12	12	12	12	12	12
Operating Pressure	bar	3.5	3.5	3.5	3.5	3.5	3.5	3.5	3.5	3.5	3.5	3.5	3.5	3.5
Expansion Vessel Charge Pressure	bar	3.5	3.5	3.5	3.5	3.5	3.5	3.5	3.5	3.5	3.5	3.5	3.5	3.5
Expansion Relief Valve Setting	bar	6	6	6	6	6	6	6	6	6	6	6	6	6
Pressure & Temperature Relief Valve Setting	bar/°C	7/90	7/90	7/90	7/90	7/90	7/90	7/90	7/90	7/90	7/90	7/90	7/90	7/90
Pressure Reducing Valve Set Pressure	bar	3.5	3.5	3.5	3.5	3.5	3.5	3.5	3.5	3.5	3.5	3.5	3.5	3.5
Electrical Supply	V	240	240	240	240	240	240	240	240	240	240	240	240/415	240/415
Immersion Heater Rating	kW	3	3	3	3+3	3+3	3+3	3+3	3	3	3	3	6	6
Immersion Heater Length	mm	480	480	480	350	350	350	350	350	350	350	350	400	400
Immersion Heater Type		(1)	(1)	(1)	(1)	(1)	(1)	(1)	(1)	(1)	(1)	(1)	(2)	(2)
Immersion Heater Reference Number		(3)	(3)	(3)	(3)	(3)	(3)	(3)	(3)	(3)	(3)	(3)	(3)	(3)
Direct Reheat Time (Single Immersion Heater) (ΔT 50°C)	mins	60	90	120	150	175	240	350	150	175	240	350	290	290
Maximum Primary Pressure	bar	-	-	-	-	-	-	-	3.5	3.5	3.5	3.5	-	3.5
Indirect Coil Rating	kW	-	-	-	-	-	-	-	20.5	26.7	26.7	26.7	-	31.8
Coil Surface Area	m^2	-	-	-	-	-	-	-	0.75	0.90	0.90	0.90	-	1.50
Indirect Reheat Time (ΔT 50°C)**	mins	-	-	-	-	-	-	-	18	22	26	40	-	54
Heat Loss (kWh in 24h) @ 60°C		1.15	1.40	1.26	1.70	1.90	2.10	2.85	2.00	2.20	2.40	2.85	3.60	3.60
Nett Weight	Kg	27	40	41	33	40	45	85	41	51	56	95	130	149
Ozone Depletion Potential (ODP)		0	0	0	0	0	0	0	0	0	0	0	0	0
Global Warming Potential (GWP)		<5	<5	<5	<5	<5	<5	<5	<5	<5	<5	<5	<5	<5

* To pressure reducing valve **Primary circuit 80°C, 1m³/h circulation. (1) Single Phase (2) Single Phase/Three Phase (3) BS 3456 Section 2.21

Model	Make of Pressure Reducing Valve	Make of 6 bar Safety Valve	Make of T&P Valve
ST ProTech 50	**SYR (15mm)**	**SYR (15mm)**	**CASHH**
ST ProTech 80	**SYR (15mm)**	**SYR (15mm)**	**CASHH**
ST ProTech 100	**SYR (22mm)**	**SYR (22mm)**	**CASHH**
ITI/STI/STI ProTech 125-300	**SYR (22mm)**	**SYR (22mm)**	**CASHH**
ITD/STD/STD ProTech 125-300	**SYR (22mm)**	**SYR (22mm)**	**CASHH**
ITSI 210 - 300	**SYR (22mm)**	**SYR (22mm)**	**CASHH**
High Capacity 500 STI	**RWC (28mm)**	**RWC (28mm)**	**CASHH**

Model	Time taken to raise temperature from 15˚C to 65˚C	Time taken to raise 70% of the stored volume to 65˚C
ST ProTech 50	63 mins	33 mins
ST ProTech 100	1 hr 56 mins	72 mins
STI/STI ProTech 125* **	15 mins	13 mins
STI/STI ProTech 210* **	24 mins	21 mins
STI 300* **	50 mins	39 mins
ITI 125* **	21 mins	16 mins
ITI 300* **	40 mins	34 mins
High Capacity 500 STI* **	44 mins	38 mins
STD 100	2 hrs 30 mins	1 hr 15 mins
STD 210	1 hr 58 mins	1 hr 39 mins
ITD 125	1 hr 12 mins	56 mins
ITD 300	3 hrs 4 mins	39 mins

***** Indirectly heated. Figures obtained in accordance with Test Criteria 1-50-220 & 1-50-222.**
****** As above utilising bottom coil only.**

		Primo ITD 100	Primo ITD 125	Primo ITD 150	Primo ITD 175	Primo ITD 210	Primo ITD 250	Primo ITD 300	Primo ITI 100	Primo ITI 125	Primo ITI 150	Primo ITI 175	Primo ITI 210	Primo ITI 250	Primo ITI 300	Primo ITSI 210	Primo ITSI 250	Primo ITSI 300
Maximum Water Supply Pressure*	bar	12	12	12	12	12	12	12	12	12	12	12	12	12	12	12	12	12
Operating Pressure	bar	3.5	3.5	3.5	3.5	3.5	3.5	3.5	3.5	3.5	3.5	3.5	3.5	3.5	3.5	3.5	3.5	3.5
Expansion Vessel Charge Pressure	bar	3.5	3.5	3.5	3.5	3.5	3.5	3.5	3.5	3.5	3.5	3.5	3.5	3.5	3.5	3.5	3.5	3.5
Expansion Relief Valve Setting	bar	6	6	6	6	6	6	6	6	6	6	6	6	6	6	6	6	6
Pressure & Temperature Relief Valve Setting	bar/°C	7/90	7/90	7/90	7/90	7/90	7/90	7/90	7/90	7/90	7/90	7/90	7/90	7/90	7/90	7/90	7/90	7/90
Pressure Reducing Valve Set Pressure	bar	3.5	3.5	3.5	3.5	3.5	3.5	3.5	3.5	3.5	3.5	3.5	3.5	3.5	3.5	3.5	3.5	3.5
Electrical Supply	V	240	240	240	240	240	240	240	240	240	240	240	240	240	240	240	240	240
Immersion Heater Rating	kW	3+3	3+3	3+3	3+3	3+3	3+3	3+3	3+3	3	3	3	3	3	3	3+3	3+3	3+3
Immersion Heater Length	mm	450	450	450	450	450	450	450	450	450	450	450	450	450	450	450	450	450
Immersion Heater Type		(1)	(1)	(1)	(1)	(1)	(1)	(1)	(1)	(1)	(1)	(1)	(1)	(1)	(1)	(1)	(1)	(1)
Immersion Heater Reference Number		(3)	(3)	(3)	(3)	(3)	(3)	(3)	(3)	(3)	(3)	(3)	(3)	(3)	(3)	(3)	(3)	(3)
Direct Reheat Time (Single Immersion Heater) (ΔT 45°C)	mins	112	131	171	199	229	289	339	109	136	172	203	218	288	334	227	271	310
Maximum Primary Pressure	bar	3.5	3.5	3.5	3.5	3.5	3.5	3.5	3.5	3.5	3.5	3.5	3.5	3.5	3.5	3.5	3.5	3.5
Indirect Coil Rating	kW	-	-	-	-	-	-	-	13.2	20.5	26.7	26.7	26.7	26.7	26.7	26.7/26.7	26.7/26.7	26.7/26.7
Coil Surface Area	m^2	-	-	-	-	-	-	-	0.5	0.67	0.78	0.78	0.89	0.89	0.89	0.67/0.67	0.67/0.67	0.67/0.89
Indirect Reheat Time (ΔT 45°C)**	mins	-	-	-	-	-	-	-	16	15	18	24	25	31	37	34	37	40
Heat Loss (kWh in 24h) @ 65°C		1.46	2.40	2.73	2.88	3.18	2.98	3.33	2.08	2.09	2.54	2.60	2.95	3.05	3.32	1.30	1.22	1.47
Nett Weight	Kg	19.1	26.6	28.8	31.0	35.2	40.1	44.8	22.4	30.8	31.8	36.4	39.8	45.6	51.8	42.6	48.6	55.6
Ozone Depletion Potential (ODP)		0	0	0	0	0	0	0	0	0	0	0	0	0	0	0	0	0
Global Warming Potential (GWP)		<5	<5	<5	<5	<5	<5	<5	<5	<5	<5	<5	<5	<5	<5	<5	<5	<5

* To pressure reducing valve **Primary circuit 80°C, 1.2m³/h circulation. (1) Single Phase (2) Single Phase/Three Phase (3) BS 3456 Section 2.21

Model	Time taken to raise temperature from 15˚C to 65˚C	Time taken to raise 70% of the stored volume to 65˚C
ITI 100***	20 mins	17 mins
ITI 150***	22 mins	19 mins
ITI 300***	45 mins	39 mins
ITSI 210****	40 mins	34 mins
ITSI 300****	48 mins	39 mins
ITD 100	2 hr 02 mins	1 hr 11 mins
ITD 150	3 hr 06 mins	2 hr 21 mins
ITD 300	6 hr 11 mins	4 hr 42 mins

*** Indirectly heated.
**** As above utilising bottom coil only.

Model	Make of Pressure Reducing Valve	Make of 6 bar Safety Valve	Make of T&P Valve
ITI 100-300	SYR (22mm)	SYR (22mm)	CASHH
ITD 100-300	SYR (22mm)	SYR (22mm)	CASHH
ITSI 210 - 300	SYR (22mm)	SYR (22mm)	CASHH

spares & parts online
IBASIS.CO.UK

spares & parts online
IBASIS.CO.UK

spares & parts online BASIS.co.uk

8. BENCHMARK COMMISSIONING CHECKLIST

MAINS PRESSURE HOT WATER STORAGE SYSTEM COMMISSIONING CHECKLIST

This Commissioning Checklist is to be completed in full by the competent person who commissioned the boiler as a means of demonstrating compliance with the appropriate Building Regulations and then handed to the customer to keep for future reference.

Failure to install and commission this equipment to the manufacturer's instructions may invalidate the warranty but does not affect statutory rights.

Customer Name _____ Telephone Number _____

Address _____

Boiler Make and Model _____

Boiler Serial Number

Commissioned by *(print name)* _____ CORGI ID Number _____

Company Name _____ Telephone Number _____

Company Address _____

_____ Commissioning Date _____

To be completed by the customer on receipt of a Building Regulations Compliance Certificate*:

Building Regulations Notification Number *(if applicable)*

ALL SYSTEMS PRIMARY SETTINGS (indirect heating only)

Is the primary circuit a sealed or open vented system?	Sealed ☐	Open ☐	
What is the maximum primary flow temperature?			°C

ALL SYSTEMS

What is the incoming static cold water pressure at the inlet to the system?				bar
Has a strainer been cleaned of installation debris (if fitted)?	Yes ☐	No ☐		
Is the installation in a hard water area (above 200ppm)?	Yes ☐	No ☐		
If yes, has a water scale reducer been fitted?	Yes ☐	No ☐		
What type of scale reducer has been fitted?				
What is the hot water thermostat set temperature?				°C
What is the maximum hot water flow rate at set thermostat temperature (measured at high flow outlet)?				l/min
Time and temperature controls have been fitted in compliance with Part L of the Building Regulations?			Yes ☐	
Type of control system (if applicable)	Y Plan ☐	S Plan ☐	Other ☐	
Is the cylinder solar (or other renewable) compatible?	Yes ☐	No ☐		
What is the hot water temperature at the nearest outlet?				°C
All appropriate pipes have been insulated up to 1 metre or the point where they become concealed			Yes ☐	

UNVENTED SYSTEMS ONLY

Where is the pressure reducing valve situated (if fitted)?			
What is the pressure reducing valve setting?			bar
Has a combined temperature and pressure relief valve and expansion valve been fitted and discharge tested?	Yes ☐	No ☐	
The tundish and discharge pipework have been connected and terminated to Part G of the Building Regulations		Yes ☐	
Are all energy sources fitted with a cut out device?	Yes ☐	No ☐	
Has the expansion vessel or internal air space been checked?	Yes ☐	No ☐	

THERMAL STORES ONLY

What store temperature is achievable?		°C
What is the maximum hot water temperature?		°C

ALL INSTALLATIONS

The hot water system complies with the appropriate Building Regulations	Yes ☐
The system has been installed and commissioned in accordance with the manufacturer's instructions	Yes ☐
The system controls have been demonstrated to and understood by the customer	Yes ☐
The manufacturer's literature, including Benchmark Checklist and Service Record, has been explained and left with the customer	Yes ☐

Commissioning Engineer's Signature _____

Customer's Signature _____

(To confirm satisfactory demonstration and receipt of manufacturer's literature)

*All installations in England and Wales must be notified to Local Authority Building Control (LABC) either directly or through a Competent Persons Scheme. A Building Regulations Compliance Certificate will then be issued to the customer.

benchmark COLLECTIVE MARK
THE MARK OF QUALITY FOR THE INSTALLATION, COMMISSIONING AND SERVICING OF DOMESTIC HEATING AND HOT WATER SYSTEMS

©Heating and Hotwater Industry Council (HHIC)

www.centralheating.co.uk

9. BENCHMARK SERVICE RECORD

SERVICE RECORD

It is recommended that your hot water system is serviced regularly and that the appropriate Service Record is completed.

Service Provider
Before completing the appropriate Service Record below, please ensure you have carried out the service as described in the manufacturer's instructions.

SERVICE 1 Date
Engineer Name
Company Name
Telephone Number
Comments
Signature

SERVICE 2 Date
Engineer Name
Company Name
Telephone Number
Comments
Signature

SERVICE 3 Date
Engineer Name
Company Name
Telephone Number
Comments
Signature

SERVICE 4 Date
Engineer Name
Company Name
Telephone Number
Comments
Signature

SERVICE 5 Date
Engineer Name
Company Name
Telephone Number
Comments
Signature

SERVICE 6 Date
Engineer Name
Company Name
Telephone Number
Comments
Signature

SERVICE 7 Date
Engineer Name
Company Name
Telephone Number
Comments
Signature

SERVICE 8 Date
Engineer Name
Company Name
Telephone Number
Comments
Signature

SERVICE 9 Date
Engineer Name
Company Name
Telephone Number
Comments
Signature

SERVICE 10 Date
Engineer Name
Company Name
Telephone Number
Comments
Signature

spares & parts online IBASIS.CO.UK

Manufacturer: **Ariston Thermo Group, Luce - France**

Commercial subsidiary: **Ariston Thermo UK Ltd**
Ariston Building
Hughenden Avenue
High Wycombe
Bucks. HP13 5FT

Telephone: (01494) 755600

Fax: (01494) 459775

Internet: www.ariston.co.uk

E-mail: info@aristonthermo.com

Technical Service Hot Line: (0870) 241 8180

Customer Service Help Desk: (0870) 600 9888

Unvented Cylinder Manual 2/2010