spares & parts online IBASIS.co.uk

ARISTON

Installation and Servicing instructions

E-Combi 24/30/38
E-System 24/30

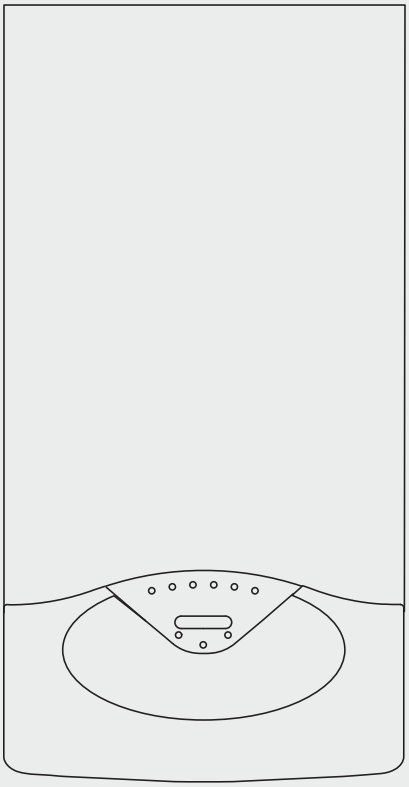

CONDENSING WALL HUNG
COMBINATION BOILER

G.C.N : 47 - 116 - 62 (24 kW)
G.C.N : 47 - 116 - 63 (30 kW)
G.C.N : 47 - 116 - 64 (38 kW)

CONDENSING WALL HUNG
O.H. BOILER

G.C.N : 41 - 116 - 34 (24 kW)
G.C.N : 41 - 116 - 35 (30 kW)

Country of destination GB, IE

kiwa approved product

UK WATER SUPPLY REGULATIONS

benchmark COLLECTIVE MARK
THE MARK OF QUALITY FOR THE INSTALLATION, COMMISSIONING AND SERVICING OF DOMESTIC HEATING AND HOT WATER SYSTEMS

CE

00000000420000106300210000000000

spares & parts online BASIS.co.uk

INDEX

Overview 3
General Information 3
Advice for the Installer 4
CE Labelling 4
Data Plate Symbols 4
Safety Regulations 5

Product description 6
Control Panel 6
Overall View 7
Overall Dimension 8
Minimum Clearances 8
Technical Information 9

Installation 11
Reference Standards 11
Flushing and water treatment 12
System Controls 12
Location 12
Condensate Discharge 13
Installing the Boiler 14
Method of positioning the boiler on the wall 14
Connecting the boiler to the system 14
Safety valve discharge and Condensate Outlet 15
Gas Connection 15
Water Connection 15
Instructions for Opening the Casing and Performing an Internal Inspection 16
Water circuit diagram 17
Connecting the Flue 18
Fitting the Coaxial Flue (Ø 60/100 Horizontal) 19
Fitting the 5" Flue (Ø 80/125 Horizontal / Vertical) 20
Fitting the Coaxial Flue (Ø 60/100 Vertical) 20
Fitting the Twin Pipe (Ø 80/80) 21
Table of flue exhaust duct lenghts 23
Type of air suction/flue gas exgaust ducting 23
Electrical Connections 24
Peripheral Unit Connection 24
Room Thermostat Connection 25
Electrical Diagram 26

Commissioning 28
Initial Preparation 28
Electricity Supply 28
Filling the Heating System 28
Filling of the DHW System (Combi only) 28
Gas Supply 28
Water Treatment 28
First Igniton Operation 29
First Ignition 30
Adjust the C.H. Ignition delay 30
Regulating the maximum C.H. power & Soft Ignition 30
Test Function and Combustion Analysis 31
Maximum gas flow combustion analysis 31
Minimum gas flow combustion analysis 31
Gas setting 31

Boiler Protection Devices 32
Boiler Protection Devices 32
Safety shut-off 32
Shutdown 32
Anti-Frost Device 32
Table summarising error codes 32

Maintenance 33
General Comments 33
Oprational Test 33
Draining procedures 33
Cleaning the primary exchanger 33
Combustion analysis 33

Maintenance guide 34
General Access 34
Electrical Unit 35
Control box access 35
Fuse 35
Main P.C.B. 36
Display P.C.B. 36
Hydraulic Unit 37
Right hand hydraulic block assembly 37
3 Way valve unit 38
Draining 38
Automatic air vent 39
Primary water pressure sensor 39
Pump 40
C.H. Filter 41
D.H.W. Flow Switch assembly 41
Left hand Hydraulic block assembly 42
Secondary Exchanger 42
Condensate Trap 43
Safety valve 43
By-pass assembly 44
Temperature sensor 44
Manual air vent 45
Main heat exchanger 45
Burner Unit 46
Spaeck generator 47
Electrodes 47
Burner 48
Fan 49
Gas valve 50
Annual Maintenance 51
Fault Finding 52
Benchmark Commissioning Checklist 53
Benchmark Service Interval Record 54
Spare Parts Short List 55

These instructions are suitable for E-COMBI and E-SYSTEM boilers :
Do not forget to complete the Benchmark Commisioning Checklist.

The Benchmark Scheme
Benchmark places responsibilities on both manufacturers and installers.
The purpose is to ensure that customers are provided with the correct equipment for their needs, that it is installed, commissioned and serviced in accordance with the manufacturer's instructions by competent persons and that it meets the requirements of the appropriate Building Regulations.
The Benchmark Checklist can be used to demonstrate compliance with Building Regulations and should be provided to the customer for future reference.

Installers are required to carry out installation, commissioning and servicing work in accordance with the Benchmark Code of Practice which is available from the Heating and Hotwater Industry Council who manage and promote the Scheme.
Visit www.centralheating.co.uk for more information.

To the Installer
As part of the commissioning of this appliance it is vital that the Log Book is completed and given to the Householder. Please ensure that your customer is aware of the importance of keeping the Log Book safe as a record of the installation and the appliance service history.

Please ensure that your customer is aware of the correct operation of the system, boiler and controls.

ARISTON recommend the use of protective clothing, when installing and working on the appliance i.e. gloves.

CUSTOMER CARE
ARISTON, as a leading manufacturer of domestic and commercial water heating appliances is committed to providing high quality products and a high quality after sales service.
Advice on installation or servicing can also be obtained by contacting the ARISTON Technical and Customer Service Departments at High Wycombe.

TECHNICAL DEPARTMENT
Tel: 0870 241 8180
Fax: 01494 459775

CUSTOMER SERVICE DEPARTMENT
Tel: 0870 600 9888
Fax: 01494 459775

GUARANTEE
The manufacturer's guarantee is for 2 years from the date of installation or 18 months from the date of production. The guarantee is invalidated if the appliance is not installed in accordance with the recommendations made herein or in a manner not approved by the manufacturer.
To assist us in providing you with an efficient after sales service, please register your boiler at www.ariston.co.uk/register without delay.

CAUTION
In the United Kingdom, installation, start-up, adjustments and maintenance, must be performed by a competent person only, in accordance with the current Gas Safety (Installation & Use) Regulations and the instructions provided.
In the Republic of Ireland, the installation and initial start up of the appliance must be carried out by a Competent Person in accordance with the current edition of I.S.813 "Domestic Gas Installations", the current Building Regulations, reference should also be made to the current ETCI rules for electrical installation.

All Gas Safe registered installers carry an ID card, and have a registration number. Both should be recorded in your boiler Log Book. You can check your installer is Gas Safe registered by visiting www.gassaferegister.co.uk or calling direct on 0800 408 5500.

Improper installation may cause damage or injury to individuals, animals and personal property for which the manufacturer will not be held liable.
To ensure efficient and safe operation it is recommended that the boiler is serviced annually by a competent person.
If it is known that a fault exists on the appliance, it must not be used until the fault has been corrected by a competent person.

This instruction booklet is especially designed for appliances installed in the UK and the Republic of Ireland

Advice for the installer

The installation and first ignition of the boiler must be performed by qualified personnel in compliance with current national regulations regarding installation, and in conformity with any requirements established by local authorities and public health organisations.

After the boiler has been installed, the installer must ensure that the end user receives the declaration of conformity and the operating manual, and should provide all necessary information as to how the boiler and the safety devices should be handled.

This appliance is designed to produce central heating hot water for domestic use only.

It should be connected to a heating system and a distribution network for domestic hot water, both of which must be compatible with its performance and power levels.

The use of the appliance for purposes other than those specified is strictly forbidden. The manufacturer cannot be held responsible for any damage caused by improper, incorrect and unreasonable use of the appliance or by the failure to comply with the instructions given in this manual.

Installation, maintenance and all other interventions must be carried out in full conformity with the governing legal regulations and the instructions provided by the manufacturer. Incorrect installation can harm persons, animals and possessions; the manufacturing company shall not be held responsible for any damage caused as a result. The boiler is delivered in a carton. Once you have removed all the packaging, make sure the appliance is intact and that no parts are missing. If this is not the case, please contact your supplier.

Keep all packaging material (clips, plastic bags, polystyrene foam, etc.) out of reach of children as it may present a potential hazard.

In the event of a fault and/or malfunction, turn the appliance off, turn off the gas cock and do not attempt to repair it yourself. Contact a qualified professional instead.

Before any maintenance or repair work is performed on the boiler, make sure you have disconnected it from the electricity supply by switching the external bipolar switch to the "OFF" position and removing the fuse.

All repairs, which should only be performed using original spare parts, should be carried out by a qualified professional. Failure to comply with the above instructions could compromise the safety of the appliance and invalidate all liability on the part of the manufacturer.

In the event of any maintenance or other structural work in the immediate vicinity of the flue or flue gas exhaust devices and their accessories, switch the appliance off by switching the external bipolar switch to the "OFF" position and shutting off the gas control valve. When the work has been completed, a qualified technician must check the efficiency of the flue and the devices.

Turn the boiler off and turn the external switch "OFF" to clean the exterior parts of the appliance.

Clean using a cloth dampened with soapy water. Do not use aggressive detergents, insecticides or toxic products. If the appliance is used in full compliance with current legislation, it will operate in a safe, environmentally-friendly and cost-efficient manner.

If using kits or optional extras, make sure they are authentic.

CE labelling

The CE mark guarantees that the appliance conforms to the following directives:

- **90/396/CEE**
  relating to gas appliances
- **2004/108/CEE**
  relating to electromagnetic compatibility
- **92/42/CEE**
  relating to energy efficiency
- **2006/95/CEE**
  relating to electrical safety

Symbols used on the data plate

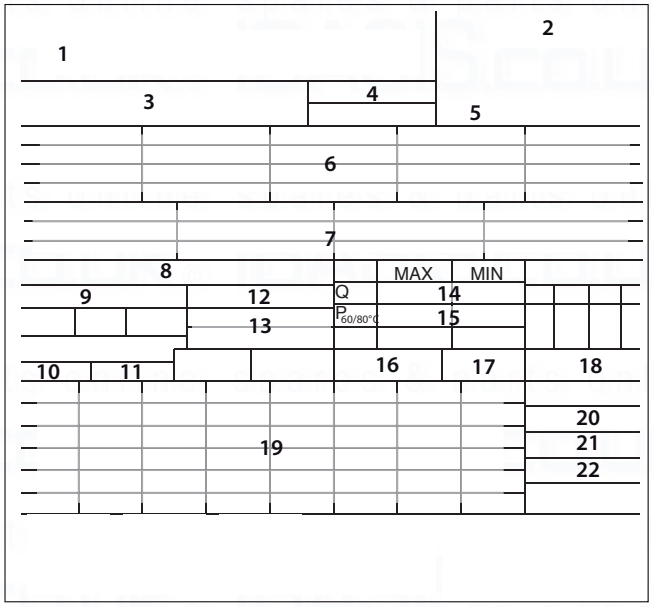

Legend :

1. Brand
2. Manufacturer
3. Boiler model - Serial number
4. Commercial reference
5. Certification number
6. Destination country - gas category
7. Gas setting
8. Installation type
9. Electrical data
10. Maximum domestic hot water pressure
11. Maximum heating pressure
12. Boiler type
13. NOx class / Efficiency
14. Input rating nominal heating
15. Power ouput heating
16. DHW specific flow rate
17. Boiler output efficiency
18. Input rating nominal DHW
19. Gases which may be used
20. Minimum ambient temperature for use
21. Max. central heating temperature
22. Max. domestic hot water temperature

Safety regulations

Key to symbols:

⚠ Failure to comply with this warning implies the risk of personal injury, in some circumstances even fatal.

△ Failure to comply with this warning implies the risk of damage, in some circumstances even serious, to property, plants or animals.

Install the appliance on a solid wall which is not subject to vibration.

⚠ Noisiness during operation.

When drilling holes in the wall for installation purposes, take care not to damage any electrical wiring or existing piping.

⚠ Electrocution caused by contact with live wires. Explosions, fires or asphyxiation caused by gas leaking from damaged piping.

△ Damage to existing installations. Flooding caused by water leaking from damaged piping.

Perform all electrical connections using wires which have a suitable section.

△ Fire caused by overheating due to electrical current passing through undersized cables.

Protect all connection pipes and wires in order to prevent them from being damaged.

⚠ Electrocution caused by contact with live wires. Explosions, fires or asphyxiation caused by gas leaking from damaged piping.

△ Flooding caused by water leaking from damaged piping.

Make sure the installation site and any systems to which the appliance must be connected comply with the applicable norms in force.

⚠ Electrocution caused by contact with live wires which have been installed incorrectly.

△ Damage to the appliance caused by improper operating conditions.

Use suitable manual tools and equipment (make sure in particular that the tool is not worn out and that its handle is fixed properly); use them correctly and make sure they do not fall from a height. Replace them once you have finished using them.

⚠ Personal injury from falling splinters or fragments, inhalation of dust, shocks, cuts, pricks and abrasions.

△ Damage to the appliance or surrounding objects caused by falling splinters, knocks and incisions.

Use electrical equipment suitable for its intended use (in particular, make sure that the power supply cable and plug are intact and that the parts featuring rotary or reciprocating motions are fastened correctly); use this equipment correctly; do not obstruct passageways with the power supply cable, make sure no equipment could fall from a height. Disconnect it and replace it safely after use.

⚠ Personal injury caused by falling splinters or fragments, inhalation of dust, knocks, cuts, puncture wounds, abrasions, noise and vibration.

△ Damage to the appliance or surrounding objects caused by falling splinters, knocks and incisions.

Make sure any portable ladders are positioned securely, that they are suitably strong and that the steps are intact and not slippery and do not wobble when someone climbs them. Ensure someone provides supervision at all times.

⚠ Personal injury caused by falling from a height or cuts (stepladders shutting accidentally).

Make sure any rolling ladders are positioned securely, that they are suitably strong, that the steps are intact and not slippery and that the ladders are fitted with handrails on either side of the ladder and parapets on the landing.

⚠ Personal injury caused by falling from a height.

During all work carried out at a certain height (generally with a difference in height of more than two metres), make sure that parapets are used to surround the work area or that individual harnesses are used to prevent falls. The space where any accidental fall may occur should be free from dangerous obstacles, and any impact upon falling should be cushioned by semi-rigid or deformable surfaces.

⚠ Personal injury caused by falling from a height.

Make sure the workplace has suitable hygiene and sanitary conditions in terms of lighting, ventilation and solidity of the structures.

⚠ Personal injury caused by knocks, stumbling etc.

Protect the appliance and all areas in the vicinity of the work place using suitable material.

△ Damage to the appliance or surrounding objects caused by falling splinters, knocks and incisions.

Handle the appliance with suitable protection and with care.

△ Damage to the appliance or surrounding objects from shocks, knocks, incisions and squashing.

During all work procedures, wear individual protective clothing and equipment.

⚠ Personal injury caused by electrocution, falling splinters or fragments, inhalation of dust, shocks, cuts, puncture wounds, abrasions, noise and vibration.

Place all debris and equipment in such a way as to make movement easy and safe, avoiding the formation of any piles which could yield or collapse.

△ Damage to the appliance or surrounding objects from shocks, knocks, incisions and squashing.

All operations inside the appliance must be performed with the necessary caution in order to avoid abrupt contact with sharp parts.

⚠ Personal injury caused by cuts, puncture wounds and abrasions.

Reset all the safety and control functions affected by any work performed on the appliance and make sure they operate correctly before restarting the appliance.

⚠ Explosions, fires or asphyxiation caused by gas leaks or an incorrect flue gas exhaust.

△ Damage or shutdown of the appliance caused by out-of-control operation.

Before handling, empty all components that may contain hot water, carrying out any bleeding if necessary.

⚠ Personal injury caused by burns.

Descale the components, in accordance with the instructions provided on the safety data sheet of the product used, airing the room, wearing protective clothing, avoid mixing different products, and protect the appliance and surrounding objects.

⚠ Personal injury caused by acidic substances coming into contact with skin or eyes; inhaling or swallowing harmful chemical agents.

△ Damage to the appliance or surrounding objects due to corrosion caused by acidic substances.

If you detect a smell of burning or smoke, keep clear of the appliance, disconnect it from the electricity supply, open all windows and contact the technician.

⚠ Personal injury caused by burns, smoke inhalation, asphyxiation

Control panel

E-COMBI

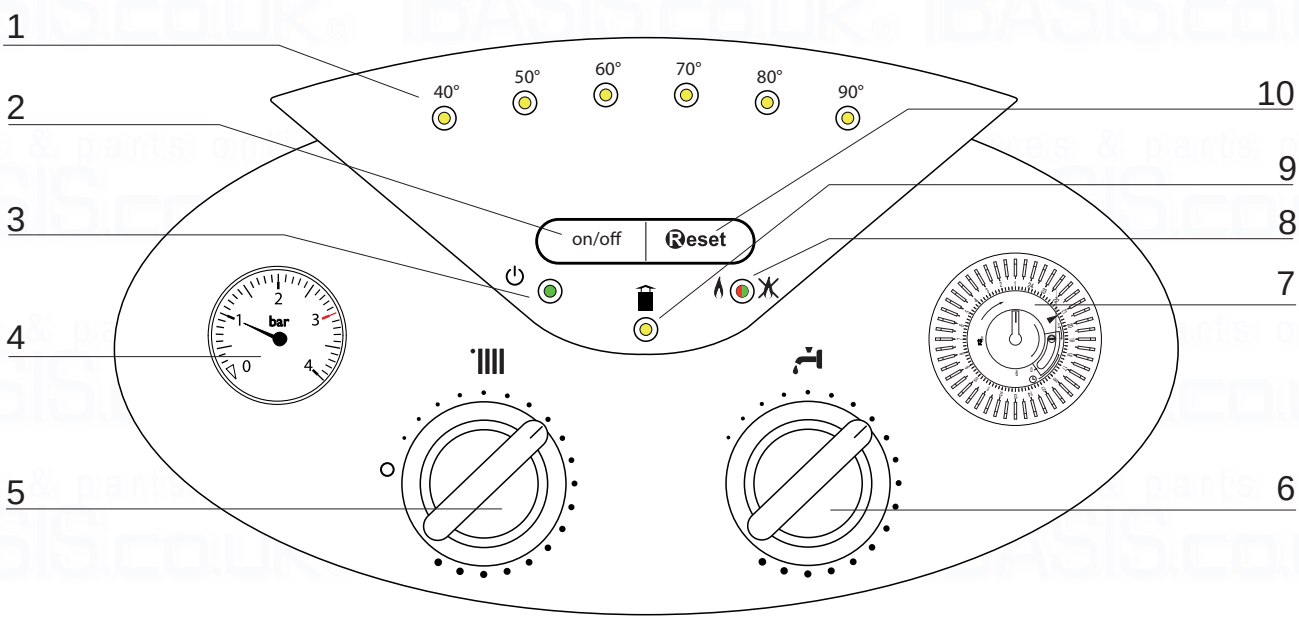

E-SYSTEM

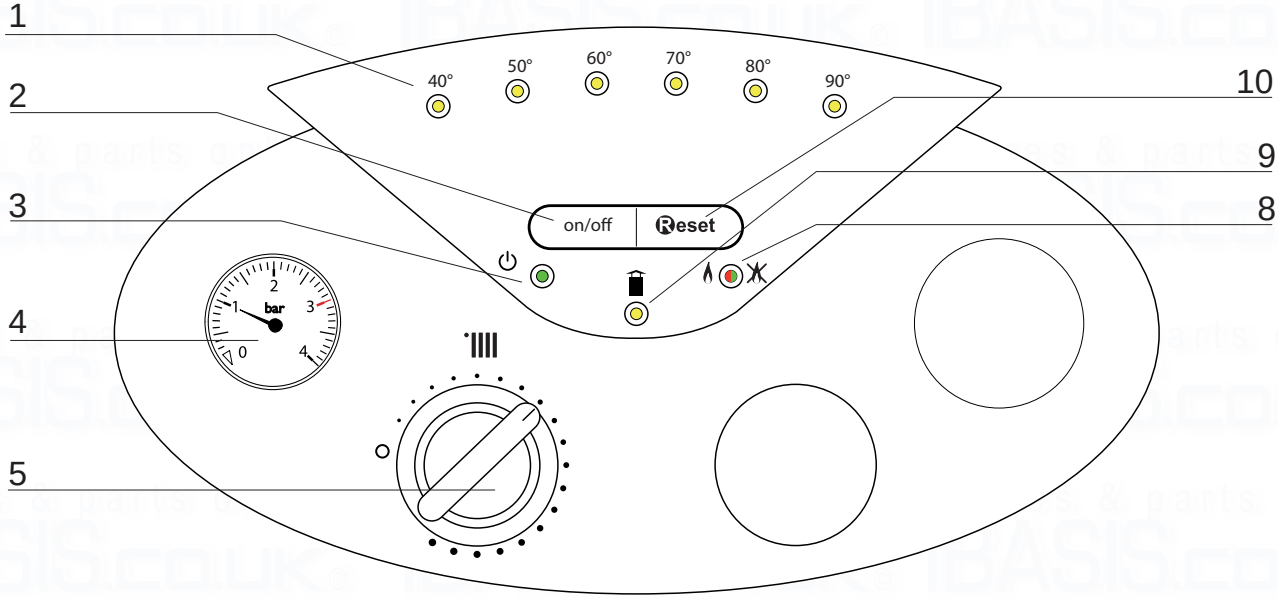

Legend :

1. Green indicator : CH temperature and error indicator
2. ON/OFF button
3. Green indicator : ON/OFF
4. Pressure gauge
5. Winter / Summer switch - Heating temperature regulation knob
6. Domestic Hot Water adjustment knob (E-Combi models)
7. Time clock (E-Combi models)
8. Green indicator : flame ON
   Red indicator : lockout light
9. Yellow indicator : flashing error light
10. RESET button

Overall view

E-COMBI

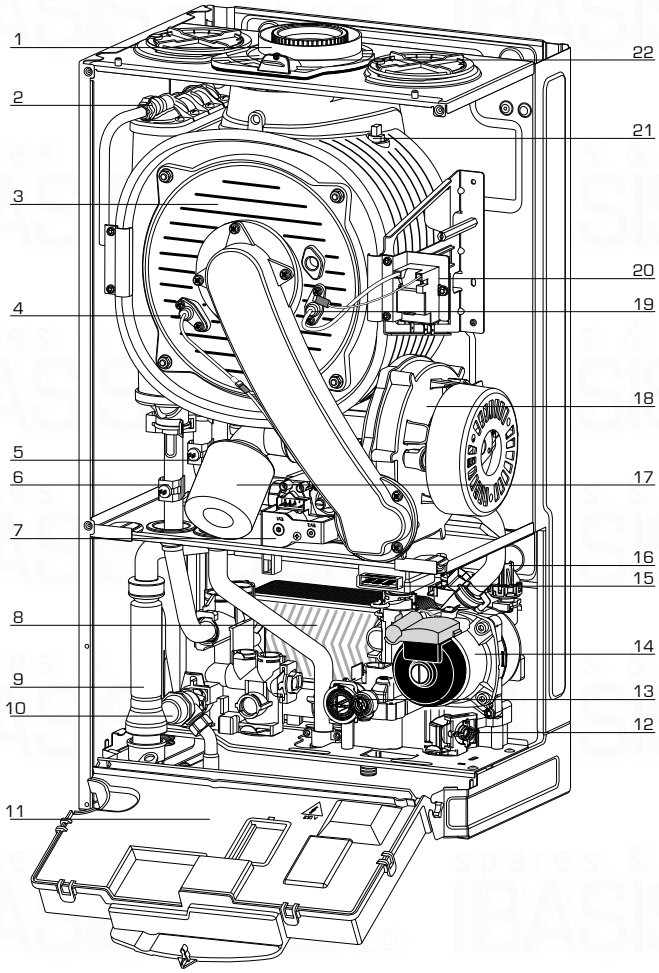

E-SYSTEM

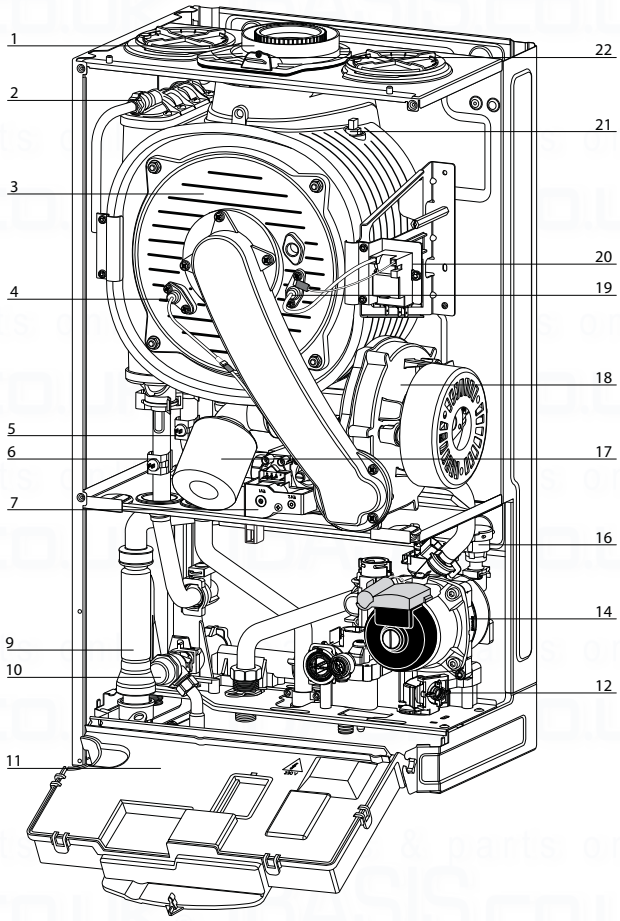

1. Flue connector
2. Manual air vent
3. Burner
4. Detection electrode
5. C.H. Return temperature probe
6. C.H. Flow temperature probe
7. Gas valve
8. Secondary heat exchanger
9. Trap
10. C.H. pressure relief valve
11. Electrical box
12. C.H. circuit filter
13. D.H.W. Flow switch
14. Circulation pump with auto air vent
15. Diverter valve
16. Low water pressure switch
17. Silencer (according to model)
18. Modulating fan
19. Ignition electrodes
20. Ignitor
21. Thermal fuse
22. Combustion analysis test point

Overall Dimensions

E-COMBI

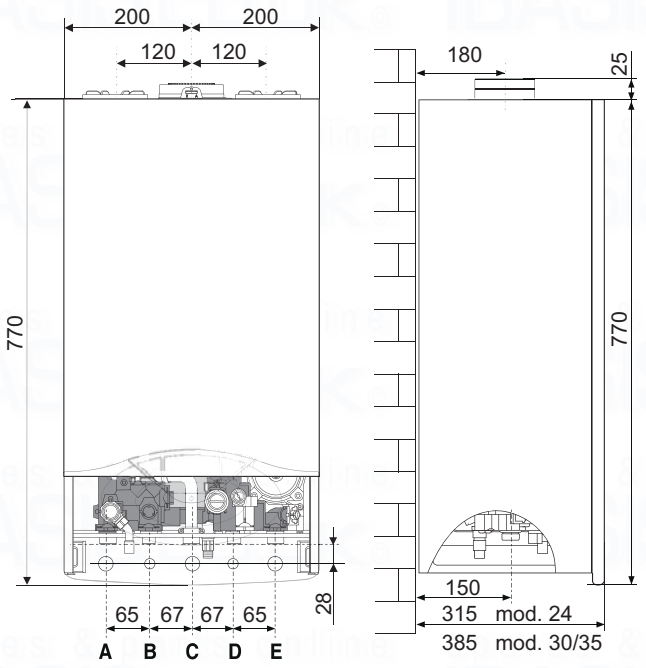

E-SYSTEM

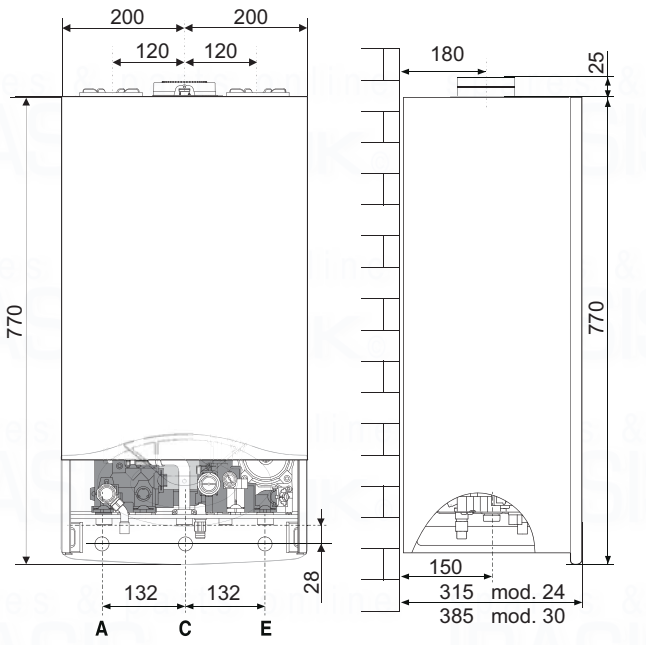

A. Central Heating Flow
B. Domestic Hot Water Outlet
C. Gas Inlet
D. Domestic Cold Water Inlet
E. Central Heating Return

Minimum clearances

In order to allow easy access to the boiler for maintenance operations, the boiler must be installed in accordance with the clearances stated to the left (opposite).

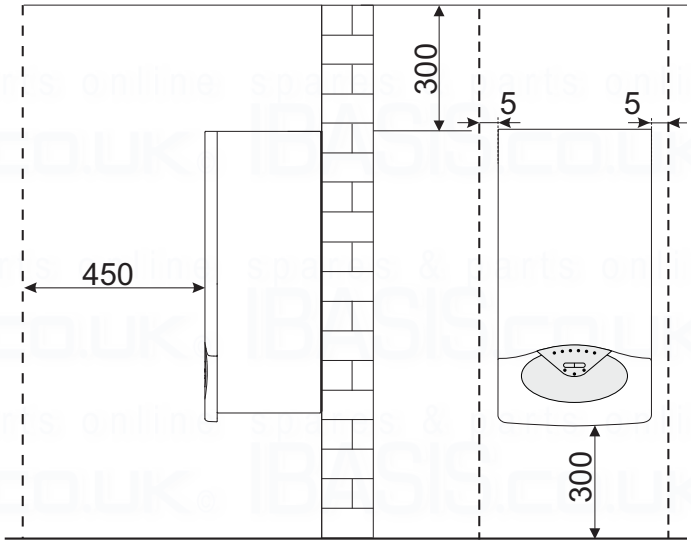

Technical Data

	Model E-COMBI		24	30	38
GENERAL NOTE	CE Certification (pin)		0085BR0347		
	Boiler type		B23-B33-C13-C33-C43-C53-C83		
POWER SPECIFICATIONS	Max/min nominal calorific flow rate (Pci) Qn	kW	22.0/5.5	28.0/6.5	31.0/7.5
	Max/min nominal calorific flow rate (Pcs) Qn	kW	24.4/6.1	31.1/7.2	34.4/8.3
	Domestic hot water max/min nominal calorific flow rate (Pci) Qn	kW	25.0/5.5	30.0/6.5	38.0/7.5
	Domestic hot water max/min nominal calorific flow rate (Pcs) Qn	kW	27.8/6.1	33.3/7.2	42.2/8.3
	Max/min power output (80°C-60°C) Pn	kW	21.6/5.2	27.4/6.2	30.3/7.3
	Max/min power output (50°C-30°C) Pn	kW	23.5/5.8	29.5/6.9	33.1/8.0
	Domestic hot water max/min power output Pn	kW	25.0/5.0	30.0/6.0	38.9/7.1
	Combustion efficiency (of flue gas)	%	97.9	97.9	98.0
	Nominal calorific flow rate efficiency (60/80°C) Hi/Hs	%	98.0/88.2	98.0/88.2	97.6/87.9
	Nominal calorific flow rate efficiency (30/50°C) (condensation) Hi/Hs	%	107.0/96.4	105.3/94.8	106.9/96.3
	Efficiency at 30% at 30°C (condensation) Hi/Hs	%	108.0/97.3	110.3/99.3	107.2/96.5
	Efficiency at 30% at 47°C Hi/Hs	%	101.0/90.9	98.2/88.4	103.1/92.8
	Minimum calorific flow rate efficiency (60/80°C) Hi/Hs	%	95.0/85.5	95.6/86.1	96.8/87.2
	Efficiency rating (dir. 92/42/EEC)	stars	****	****	****
	Sedbuk Band Rating	band	A / 90.3	A / 90.1	A / 90,1
	Loss when stopped (ΔT = 50°C)	%	0.2	0.1	0.1
	Loss of burner gas when operating	%	2.1	2.1	2.0
EMISSIONS	Available air pressure	Pa	137	141	132
	NoX class	class	5	5	5
	Flue gas temperature (G20) (80°C-60°C)	°C	63	63	63
	CO2 content (G20) (80°C-60°C)	%	9.0	9.0	9.6
	CO content (0%O2) (80°C-60°C)	ppm	< 100	< 100	< 125
	O2 content (G20) (80°C-60°C)	%	4.5	4.5	3,5
	Maximum flue gas flow (G20) (80°C-60°C)	Kg/h	41.2	49.4	59.2
	Excess air (80°C-60°C)	%	27	27	20
HEATING CIRCUIT	Expansion vessel inflation pressure	bar	1	1	1
	Maximum heating pressure	bar	3	3	3
	Expansion vessel capacity	L	6.5	6.5	6.5
	Maximum water capacity with in the appliance (75°C-35°C)	L	100/300	100/300	100/300
	Min/max heating temperature (high temperature range)	°C	35/82	35/82	35/82
D. H. W. CIRCUIT	Domestic hot water max/min temperature	°C	36/60	36/60	36/60
	Specific flow rate of domestic hot water (ΔT=30°C)	l/mn	12.0	15.0	18.2
	Quantity of hot water ΔT=25°C	l/mn	14.4	18.0	21.8
	Quantity of hot water ΔT=35°C	l/mn	10.3	12.9	15.6
	Hot water comfort rating (EN13203)	stars	***	***	***
	Hot water minimum flow rate	l/mn	< 2	< 2	< 2
	Domestic hot water max/min pressure	bar	7/0.3	7/0.3	7/0.3
ELECTRICAL	Power supply frequency/voltage	V/Hz	230/50	230/50	230/50
	Total electrical power absorbed	W	114	115	150
	Minimum ambient temperature for use	°C	+5	+5	+5
	Protection level for the electrical appliance	PI	X5D	X5D	X5D
	Weight	kg	32	35	35,5

	Model E-SYSTEM			24	30
GENERAL NOTE	CE Certification (pin)			0085BR0347	
	Boiler type			B23-B33-C13-C33-C43-C53-C83	
POWER SPECIFICATIONS	Max/min nominal calorific flow rate (Pci)	Qn	kW	22.0/5.5	28.0/6.5
	Max/min nominal calorific flow rate (Pcs)	Qn	kW	24.4/6.1	31.1/7.2
	Max/min power output (80°C-60°C)	Pn	kW	21.6/5.2	27.4/6.2
	Max/min power output (50°C-30°C)	Pn	kW	23.5/5.8	29.5/6.9
	Combustion efficiency (of flue gas)		%	97.9	97.9
	Nominal calorific flow rate efficiency (60/80°C) Hi/Hs		%	98.0/88.2	98.0/88.2
	Nominal calorific flow rate efficiency (30/50°C) (condensation) Hi/Hs		%	107.0/96.4	105.3/94.8
	Efficiency at 30% at 30°C (condensation) Hi/Hs		%	108.0/97.3	110.3/99.3
	Efficiency at 30% at 47°C Hi/Hs		%	101.0/90.9	98.2/88.4
	Minimum calorific flow rate efficiency (60/80°C) Hi/Hs		%	95.0/85.5	95.6/86.1
	Efficiency rating (dir. 92/42/EEC)		stars	****	****
	Sedbuk Band Rating		band	A / 90.3	A / 90.1
	Loss when stopped (ΔT = 50°C)		%	0.2	0.1
	Loss of burner gas when operating		%	2.1	2.1
EMISSIONS	Available air pressure		Pa	137	141
	NoX class		class	5	5
	Flue gas temperature (G20) (80°C-60°C)		°C	63	63
	CO2 content (G20) (80°C-60°C)		%	9.0	9.0
	CO content (0%O2) (80°C-60°C)		ppm	< 100	< 100
	O2 content (G20) (80°C-60°C)		%	4.5	4.5
	Maximum flue gas flow (G20) (80°C-60°C)		Kg/h	41.2	49.4
	Excess air (80°C-60°C)		%	27	27
HEATING CIRCUIT	Expansion vessel inflation pressure		bar	1	1
	Maximum heating pressure		bar	3	3
	Expansion vessel capacity		L	6.5	6.5
	Maximum water capacity with in the appliance (75°C-35°C)		L	100/300	100/300
	Min/max heating temperature (high temperature range)		°C	35/82	35/82
D. H. W. CIRCUIT	Domestic hot water max/min temperature		°C	36/60	36/60
ELECTRICAL	Power supply frequency/voltage		V/Hz	230/50	230/50
	Total electrical power absorbed		W	114	115
	Minimum ambient temperature for use		°C	+5	+5
	Protection level for the electrical appliance		PI	X5D	X5D
	Weight		kg	32	35

Reference Standards

In the United Kingdom, the installation and initial start-up of the boiler must be by a Gas Safe registered installer in accordance with the installation standards currently in effect, as well as with any and all local health and safety standards i.e. Gas Safe.

In the Republic of Ireland the installation and initial start-up of the appliance must be carried out by a Competent Person in accordance with the current edition of I.S.813 "Domestic Gas Installations" and the current Building Regulations, reference should also be made to the current ETCI rules for electrical installation.

The installation of this appliance must be in accordance with the relevant requirements of the Local Building Regulations, the current I.E.E. Wiring Regulations, the by-laws of the local authority, in Scotland, in accordance with the Building Standards (Scotland) Regulation and Health and Safety document No. 635, "Electricity at Work Regulations 1989" and in the Republic of Ireland with the current edition of I.S. 813 and the Local Building Regulations (IE).

C.O.S.H.H.

Materials used in the manufacture of this appliance are non-hazardous and no special precautions are required when servicing.

Codes of Practice

Installation should also comply with the following British Standards Code of Practice:

BS 7593:1992 Treatment of water in domestic hot water central heating systems
BS 5546:1990 Installation of hot water supplies for domestic purposes
BS 5440-1:2008 Flues
BS 5440-2:2009 Air supply
BS 5449:1990 Forced ciculation hot water systems
BS 6798:2009 Installation of gas fired hot water boilers of rated input not exceeding 70kW
BS 6891:1989 Installation of low pressure gas pipes up to 28mm
BS 7671:2001 IEE Wiring Regulations
BS 4814:1990 Specification for expansion vessels
BS 5482:1994 Installation of L.P.G. Domestic heating compliance guide

and in the Republic of Ireland in accordancce with the following codes of practice:

I.S. 813 Domestic Gas Installations

Avoid installing the boiler where the air inlet can be polluted by chemical products such as chlorine (swimming pool area), or ammonia (hair dresser), or alkalin products (launderette).

Flue

Detailed information on flue assembly can be found in the "**Connecting the Flue"** section.

The boiler must be installed so that the flue terminal is exposed to the free passage of external air at all times and must not be installed in a place likely to cause nuisance. It must not be allowed to discharge into another room or space such as an outhouse or closed lean-to.

Condensing boilers have a tendency to form a plume of water vapour from the flue terminal due to the low temperature of the flue gasses. The terminal should therefore be located with due regard for the damage or discolouration that may occur to building within the vicinity and consideration must also be given to adjacent boundaries, openable windows the min acceptable clearances are shown opposite.

NOTE: THE FLUE MUST NOT BE INSTALLED IN A PLACE LIKELY TO CAUSE A NUISANCE AND POSITIONED TO ENSURE THAT PRODUCTS OF COMBUSTION DO NOT DISCHARGE ACROSS A BOUNDARY

It may be necessary to protect the terminal with a guard, if this is the case it will be necessary to purchase a stainless steel terminal guard. Reference should be made to the Building Regulations for guidance.

Ventilation

The room in which the boiler is installed does not require specific ventilation. If the boiler is installed in a cupboard or compartment ventilation is not required for cooling purposes.

Gas Supply

The gas installation and tightness testing must be in accordance with the requirements of BS6891. Ensure that the pipe size is adequate for demand including other gas appliances on the same supply.

Electrical Supply

The appliance requires an earthed 230V - 50 Hz supply and must be in accordance with current I.E.E. regulations.

It must also be possible to be able to completely isolate the appliance electrically.

Connection should be via a 3 amp double pole fused isolating switch with contact separation of at least 3mm on both poles.

Alternatively, a fused 3 amp, 3 pin plug and unswitched socket may be used, provided it is not used in a room containing a bath or shower, it. It should only supply the appliance.

Water Supply

The boiler is suitable for sealed systems only. The maximum working pressure for the appliance is 6 bar. All fittings and pipework for the appliance should be of the same standard. If there is a possibility of the incoming mains pressure exceeding 6 bar, particularly at night, then a suitable pressure limiting valve must be fitted.

The boiler is designed to provide hot water on demand to multiple outlets within the property. If there is a requirement for greater demands, for example if the boiler has several bathrooms and cloakrooms, a vented or unvented hot water storage system may be used.

Showers

Any shower valves used with the appliance should be of a thermostatic or pressure balanced type.

Refer to the shower manufacturer for performance guidance and suitability.

Flushing and Water Treatment

The boiler is equipped with a stainless steel heat exchanger.
The detailed recommendations for water treatment are given in BS 7593:1992 (Treatment of water in domestic hot water central heating systems); the following notes are given for general guidance.
If the boiler is installed on an existing system, any unsuitable additives must be removed.
Under no circumstances should the boiler be fired before the system has been thoroughly flushed; the flushing procedure must be in line with BS 7593:1992.
We highly recommend the use of a flushing detergent appropriate for the metals used in the circuit. These include cleansers produced by Fernox BetzDearbon, whose function is to disolve any foreign matter that may be in the system.
In hard water areas or where large quantities of water are in the system the treatment of water to prevent premature scaling of the main exchanger is necessary.
The formation of scale heat compromises the efficiency of the thermic exchanger because small areas of scale cause a high increase of the temperature of the metallic walls and therefore add to the thermal stress of the heat exchanger.
Demineralised water is more aggressive so in this situation it is necessary to treat the water with an appropriate corrosion inhibitor.
Any treatment of water by additives in the system for frost protection or for corrosion inhibition has to be absolutely suitable for all metals used in the circuit.
The use of a corrosion inhibitor in the sysem such as Fernox MB-1, BetzDearborn Sentinel X100 or Fernox System Inhibitor is recommended to prevent corrosion (sludge) damaging the boiler and system.
If anti-freeze substances are to be used in the system, check carefully that they are compatible with the metals used in the circuit.
ARISTON suggests the use of suitable anti-freeze products such as Fernox ALPHI 11, which will prevent rust and incrustation taking place.
Periodicaly check the pH balance of the water/anti-freeze mixture of the boiler circuit and replace it when the amount measured is out of the range stipulated by the manufacturer (7 < pH < 8).
DO NOT MIX DIFFERENT TYPES OF ANTI-FREEZE
In under-floor systems, the use of plastic pipes without protection against penetration of oxygen through the walls can cause corrosion of the systems metal parts (metal piping, boiler etc), through the formation of oxides and bacterial agents.
To prevent this problem it is necessary to use pipes with an "oxygen proof barrier", in accordance with standards DIN 4726/4729.
If pipes of this kind are not used, keep the system separate by installing heat exchangers of those with a specific system water treatment.

IMPORTANT
Failure carry out the water treatment procedure will invalidate the appliance guarantee.

System Controls

The boiler is electrically controlled and is suitable for most modern electronic time and temperature controls. The addition of such external controls can be beneficial to the efficient operation of the system. The boiler connections for external controls are 12V DC and so only controls of 12V DC that have voltage free contacts should be used. (page 25).
ARISTON supply a range of wired and wireless system controls. Contact your supplier for more details.

Location

The boiler can be installed on any suitable internal wall (suitable sound proofing may be required when installing onto a stud partition wall). Provision must be made to allow for the correct routing of the flue and siting of the terminal to allow the safe and efficient removal of the flue products.
A compartment or cupboard may be used provided that it has been built or modified for this purpose.
It is not necessary to provide permanent ventilation for cooling purposes. Detailed recommendations are given in BS 5440 Part 2.
If it is proposed that it is to be installed in a timber framed building then reference should be made to British Gas Document DM2, IGE/UP/7 or advice sought from Gas Safe.

Where a room sealed appliance is installed in a room containing a bath or shower, the appliance and any electrical switch or appliance control, utilising mains electricity should be situated specifically in accordance with current IEE Wiring Regulations.

For unusual locations, special procedures may be necessary. **BS 6798:2009** gives detailed guidance on this aspect.

Condensate Discharge

The condensate discharge hose from the boiler must have a continuous fall of 2.5° and must be inserted by at least 50mm into a suitable acid resistant pipe - e.g. plastic waste or overflow pipe. The condensate discharge pipe must have a minimum diameter of 22mm, must have a continuous fall and preferably be installed and terminated to prevent freezing.

The discharge pipe must be terminated in a suitable position:

i) Connecting into an internal soil stack (at least 450mm above the invert of the stack). A trap giving a water seal of at least 75mm must be incorporated into the pipe run, there also must be an air beak upstream of the trap.

ii) Connecting into the waste system of the building such as a washing maching or sink trap. The connection must be upstream of the washing machine/sink. If the connection is downstream of the waste trap then an additional trap giving a minimum water seal of 75mm and an air break must be incorporated in the pipe run, as above.

iii) Terminating into a gully, below the grid level but above the water level

iv) Into a soakaway

Note: If any condensate pipework is to be installed externally then it should be kept to a minimum and be insulated with a waterproof insulation and have a continuous fall. The total length of external pipe used should not exceed 3 metres.

Some examples of the type of condensate terminations can be found below.

1. Internal termination of condensate drainage pipe to internal stack.

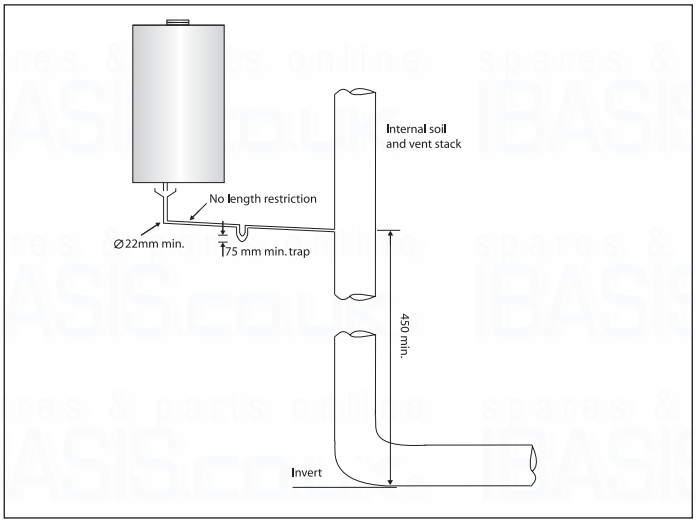

2. External termination of condensate drainage pipe via internal discharge branch (e.g. sink waste) and condensate trap.

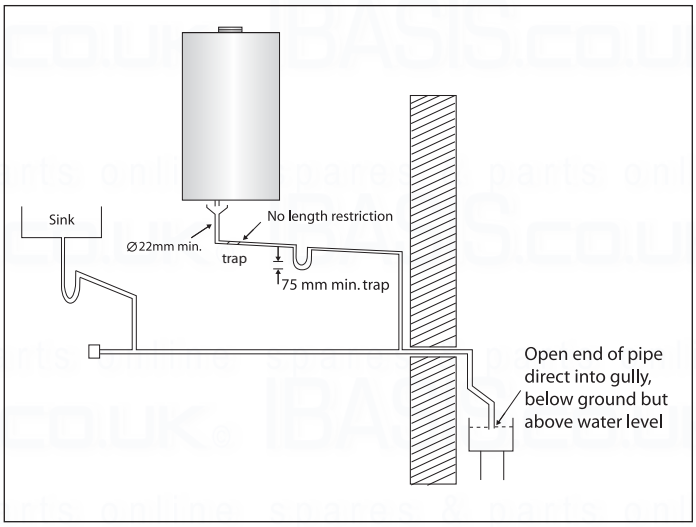

3. External termination of condensate drainage pipe via internal discharge branch (e.g. sink waste - proprietary fitting).

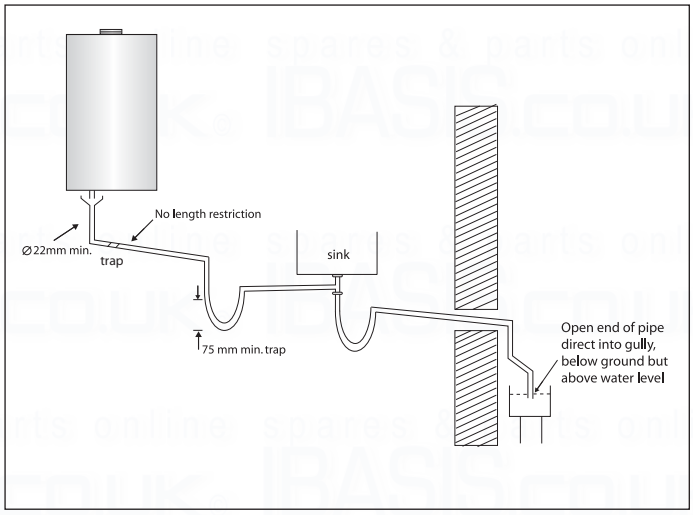

4. External termination of condensate drainage pipe via condensate trap

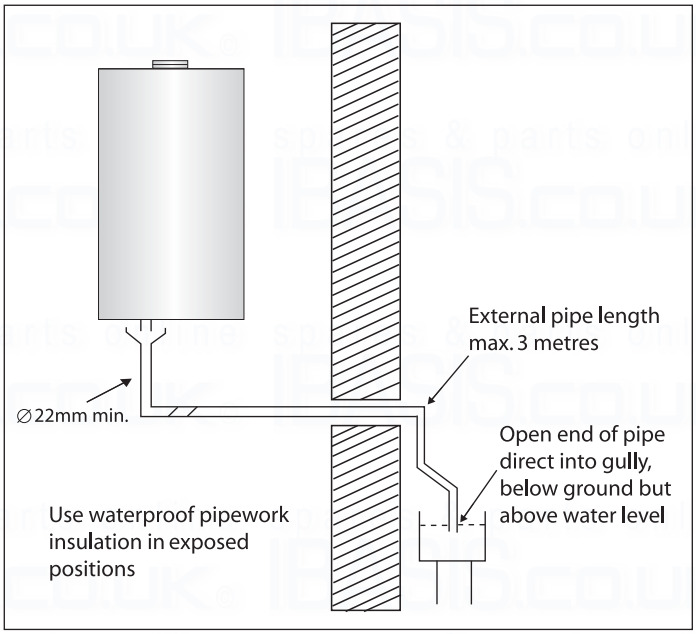

Installing the Boiler

Please check that you are familiar with the installation requirement before commencing work (pages 7 - 13).

The installation accessories described in the following list are included in the boiler packaging:

- Hanging bracket
- A paper template (showing the dimensions of the boiler with 5 mm side clearances)
- Connection valves (compression)
- Washers
- Filling loop
- Installation, Servicing and Operating Instructions
- Flue gasket

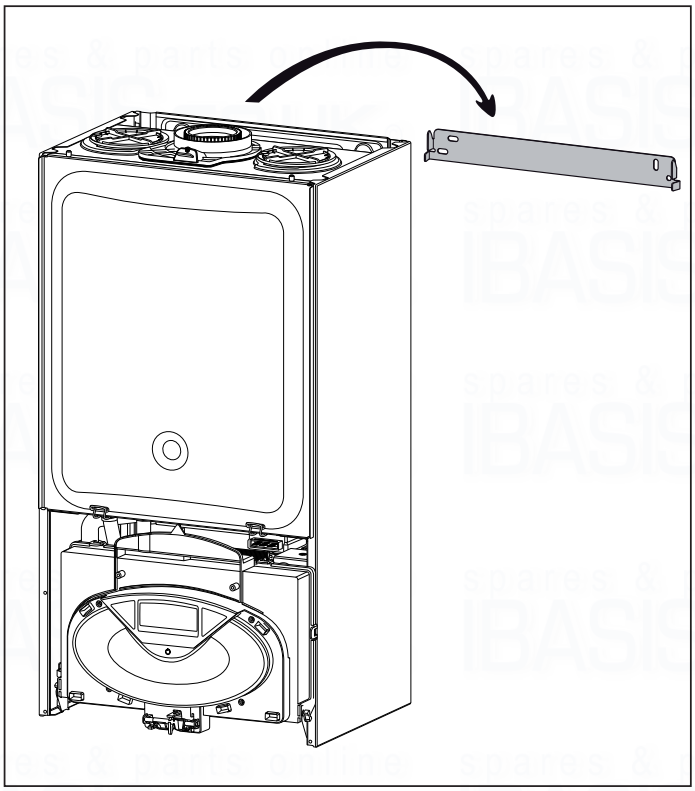

Method of positioning the boiler on the wall

The paper template can be used to ensure the correct positioning of kitchen cabinets etc.

The paper template has to be fixed to the wall and used to locate the position of the hanging bracket and the centre for the flue hole.

Drill and plug the wall and secure the hanging bracket using the screws provided ensure the hanging bracket is level. Remove the boiler from its packaging and remove the front casing panel.

Place the boiler on the hanging bracket.

NOTE: THE APPLIANCE MUST NOT BE FITTED ON A COMBUSTIBLE WALL SURFACE.

Connecting the boiler to the system

- Remove the boiler casing as described on page 16
- Remove the caps and connect the valves to the boiler using the washers provided
- 4 x fibre washers for the CH flow and return, cold water inlet and hot water outlet connections

E-COMBI

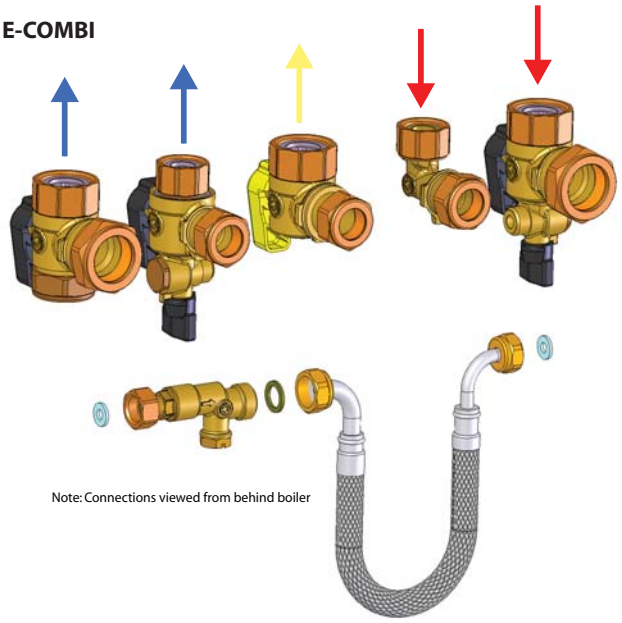

E-SYSTEM

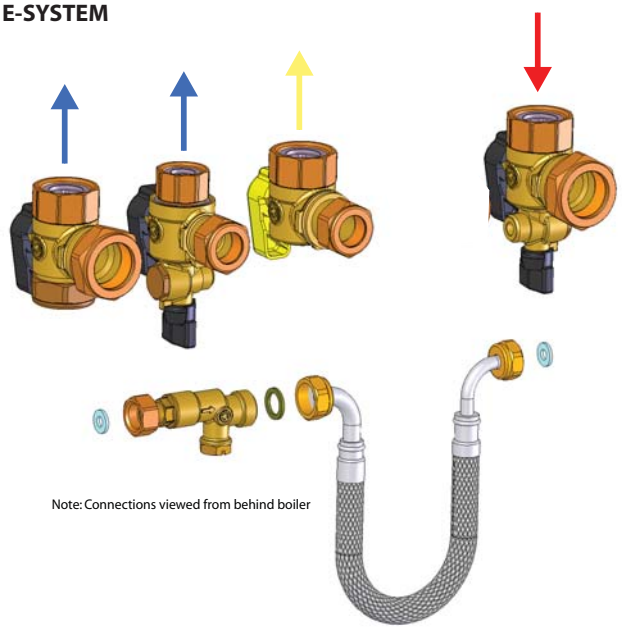

Safety Valve Discharge and Condense Outlet

The pressure relief valve pipe is made of copper. It should terminate below the boiler safely outside the premises. Care should be taken that it does not terminate over an entrance or window or where a discharge of heated water could endanger occupants or passers by.

⚠ **Warning !**

Do not apply heat to the copper safety valve outlet pipe whilst it is connected to the 3 bar safety relief valve.

Fill the central heating and DHW system and bleed air from the system as described in the Commissioning instructions (page 30).

The system should be carefully checked for leaks, as frequent refilling could cause premature system corrosion or unnecessary scaling of the heat exchanger. The pipe from the trap should be connected to a drain as described in the relevant regulations.

Pay special attention not to bend the condensate drain pipe in such a way as to interrupt the flow. Please only use drain pipe material compatible with condensate products (refer to BS 6798:2009).

The condensate flow can reach 2 litres/hour because of the acidity of the condensate products (Ph close to 2), take care before operation.

See page 13 for condensate discharge options.

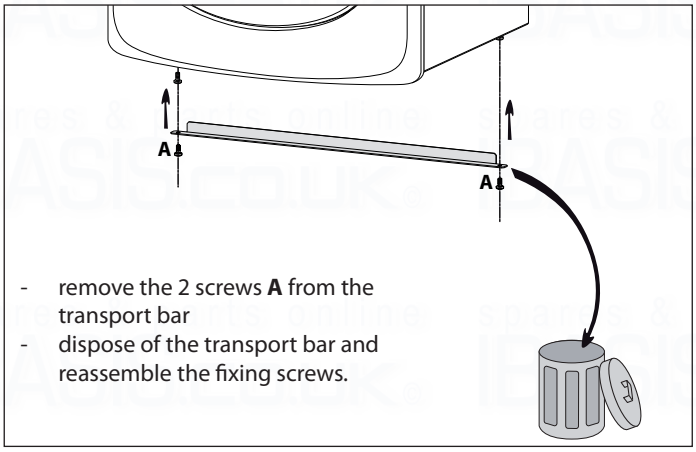

Gas connection

Make sure, using the labels on the packaging and the data plate on the appliance itself, that the boiler is in the correct country and that the gas category for which the boiler was designed corresponds to one of the categories available in the country where it will be used.

The gas supply piping must be created and measured out in compliance with specific legal requirements and in accordance with the maximum power of the boiler; you should also make sure that the shut-off valve is the right size and that it is connected correctly.

Check that the supplied gas corresponds to the type of gas for which the boiler was designed (see the data plate located on the appliance itself).

It is also important to check that the pressure of the gas (methane or LPG) you will be using to feed the boiler is suitable, because if it is insufficient the power may be reduced, causing inconvenience for the user.

Water connection

The illustration below shows the connections for the water and gas attachments of the boiler. See valves configuration on page 14.

Check that the maximum water mains pressure does not exceed 6 bar; if it does, a pressure reducing valve must be installed.

For the measuring of the pipes and of the heating bodies in the heating system, the residual head value should be calculated as a function of the requested flow rate, in accordance with the values shown in the circulation pump graph (page 16).

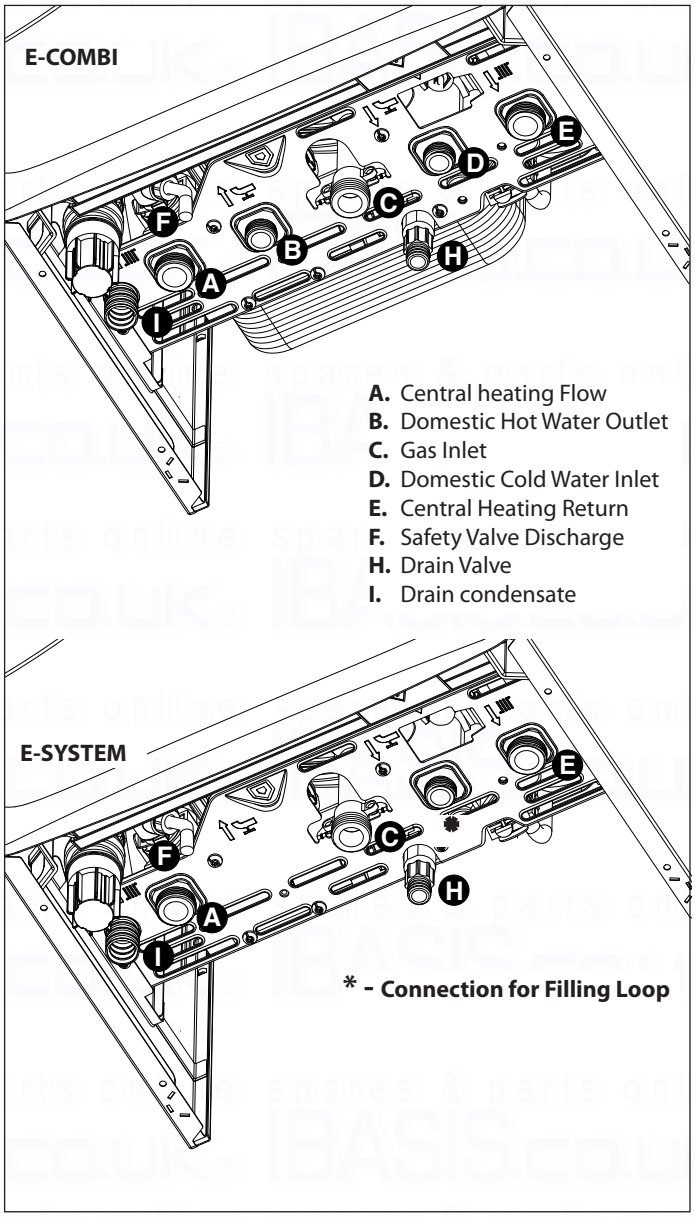

Instructions for opening the casing and performing an internal inspection

Before performing any work on the boiler, first disconnect it from the electrical power supply using the external bipolar switch; removing the fuse and shutting off the gas cock.

To access the inside of the boiler, the following is necessary:

1. Remove the casing by unhooking it from the control panel (a)
2. Loosen the two screws on the front casing (b), pull it forwards and unhook it from the upper pins (c)
3. Lower the control panel (d)
4. Unhook the two clips on the combustion chamber panel and lift off (e).

(a)

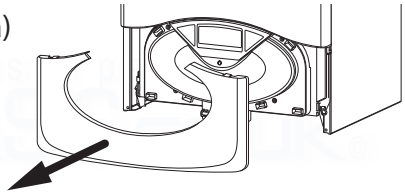

(b)

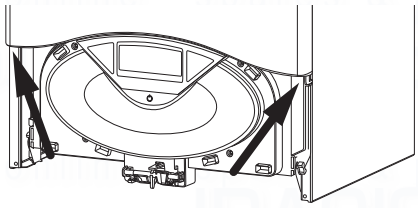

(c)

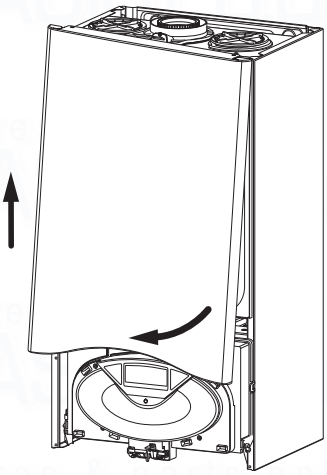

(d)

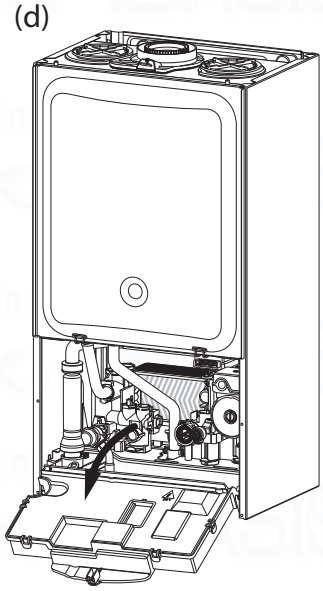

(e)

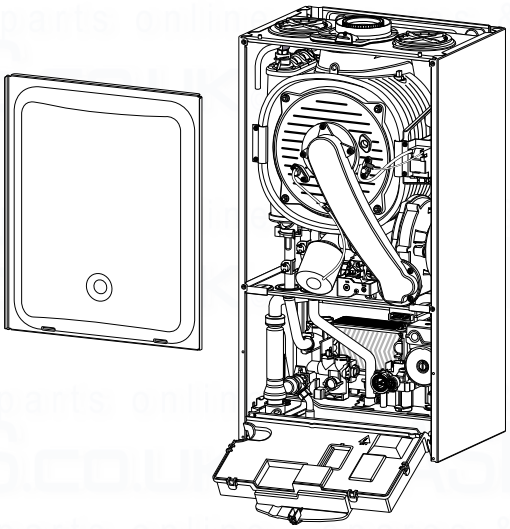

To calculate the size of the heating installation, refer to the "Available pressure" graph below.

Graph representing the available circulation pump pressure ΔT20°C

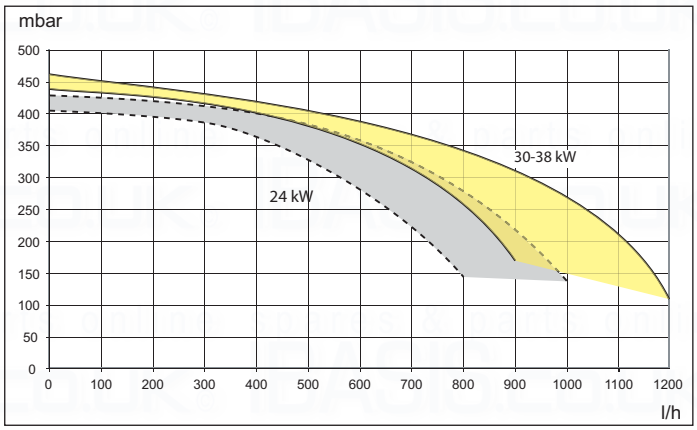

⚠ **Before the equipment is used, for the first time the trap must be filled with water. To do this, add approximately 1/4 litre of water via the flue outlet before fitting the flue system, or unscrew the cap on the trap positioned underneath the boiler, fill it with water and refit it.**

⚠ **Warning!**

Insufficient water in the trap can temporarily cause the flue gas to be expelled into the surrounding ambient air.

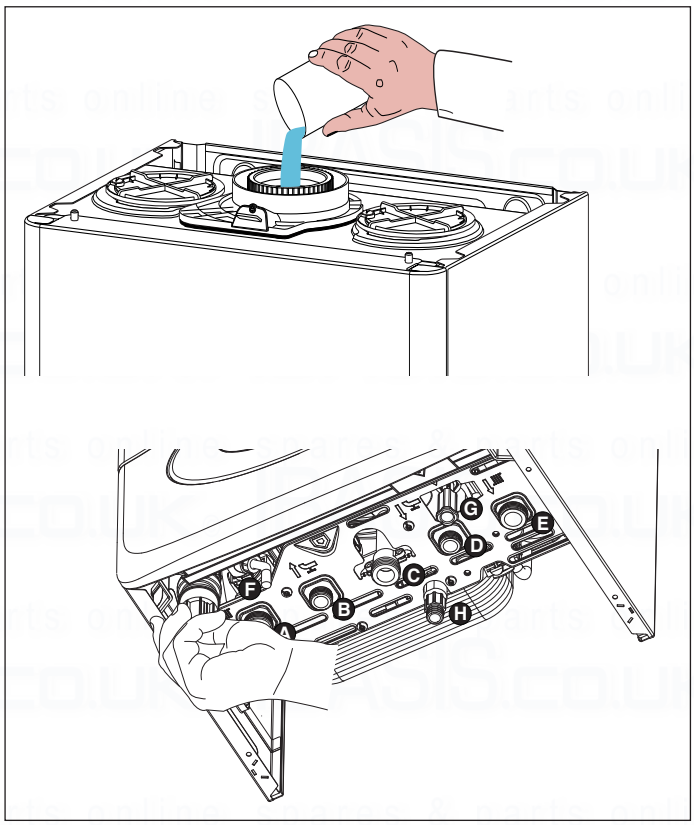

Water circuit diagram

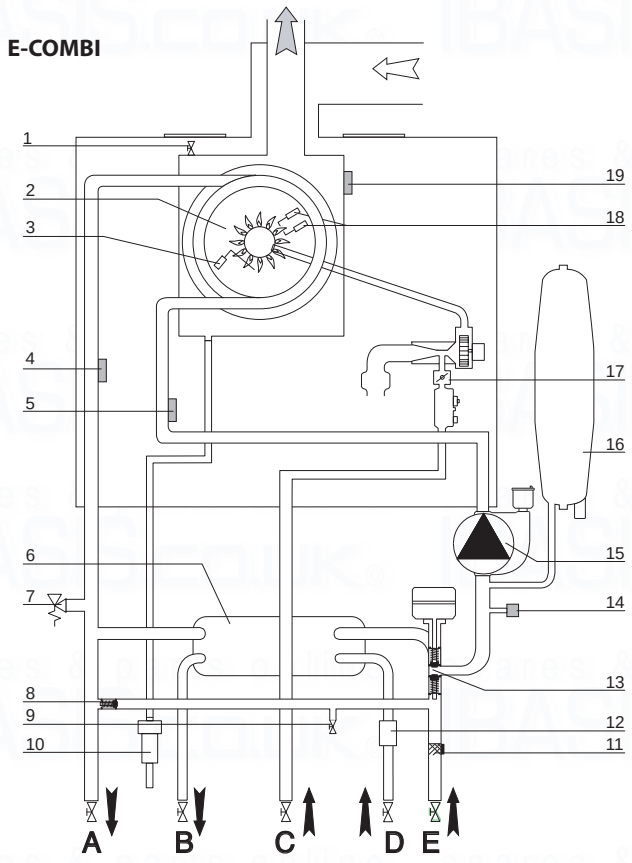

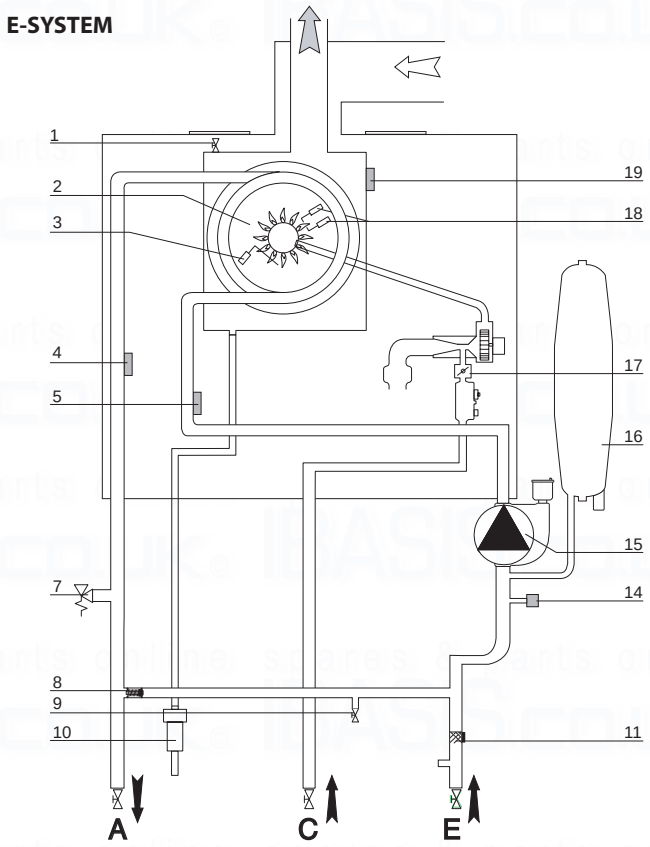

1. Manual air vent
2. Burner
3. Detection electrode
4. C.H. flow temperature probe
5. C.H. return temperature probe
6. Secondary heat exchanger
7. C.H. pressure relief valve
8. By-pass
9. Drain valve
10. Condensate trap
11. C.H. circuit filter
12. D.H.W. Flow switch
13. Diverter valve
14. Low water pres switch
15. Circulation pump
16. Expansion vessel
17. Modulating fan
18. Ignition electrodes
19. Thermal fuse

Connecting the Flue

Flue System

The provision for satisfactory flue termination must be made as described in BS 5440-1.

The appliance must be installed so that the flue terminal is exposed to outdoor air.

The terminal must not discharge into another room or space such as an outhouse or lean-to.

It is important that the position of the terminal allows a free passage of air across it at all times.

The terminal should be located with due regard for the damage or discolouration that might occur on buildings in the vicinity, it must also be located in a place not likely to cause nuisance.

In cold or humid weather water vapour may condense on leaving the flue terminal.

The effect of such "steaming" must be considered.

If the terminal is less than 2 metres above a balcony, above ground or above a flat roof to which people have access, then a suitable stainless steel terminal guard must be fitted.

The minimum acceptable spacing from the terminal to obstructions and ventilation openings are specified in Fig. 1.

Where 2 or more vertical fanned draught chimney configurations teminate in close proximity at the same height they shall be separated by at least 300mm. Where any 1 vertical outlet is more than 300mm above the other, then they shall be separated by at least 1500mm.

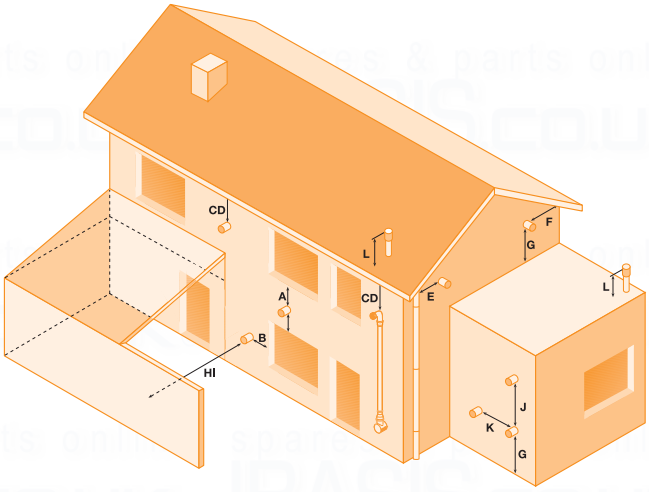

Fig. 1

- A	Directly below an opening, window, etc	300 mm
- B	Horizontally to an opening, window, etc	300 mm
- C	Below gutters, soils pipes or drain pipes	75 mm
- D	Below eaves	200 mm
- E	From vertical drain pipe or soil pipe	75 mm
- F	From internal or external corner	300 mm
- G	Above ground, roof or balcony level	300 mm
- H	From a surface facing the terminal	600 mm
- I	From a terminal facing a terminal	1200 mm
- J	Vertically from a terminal on the same wall	1500 mm
- K	Horizontally from an terminal on the same wall	300 mm
- L	Fixed by vertical flue terminal	

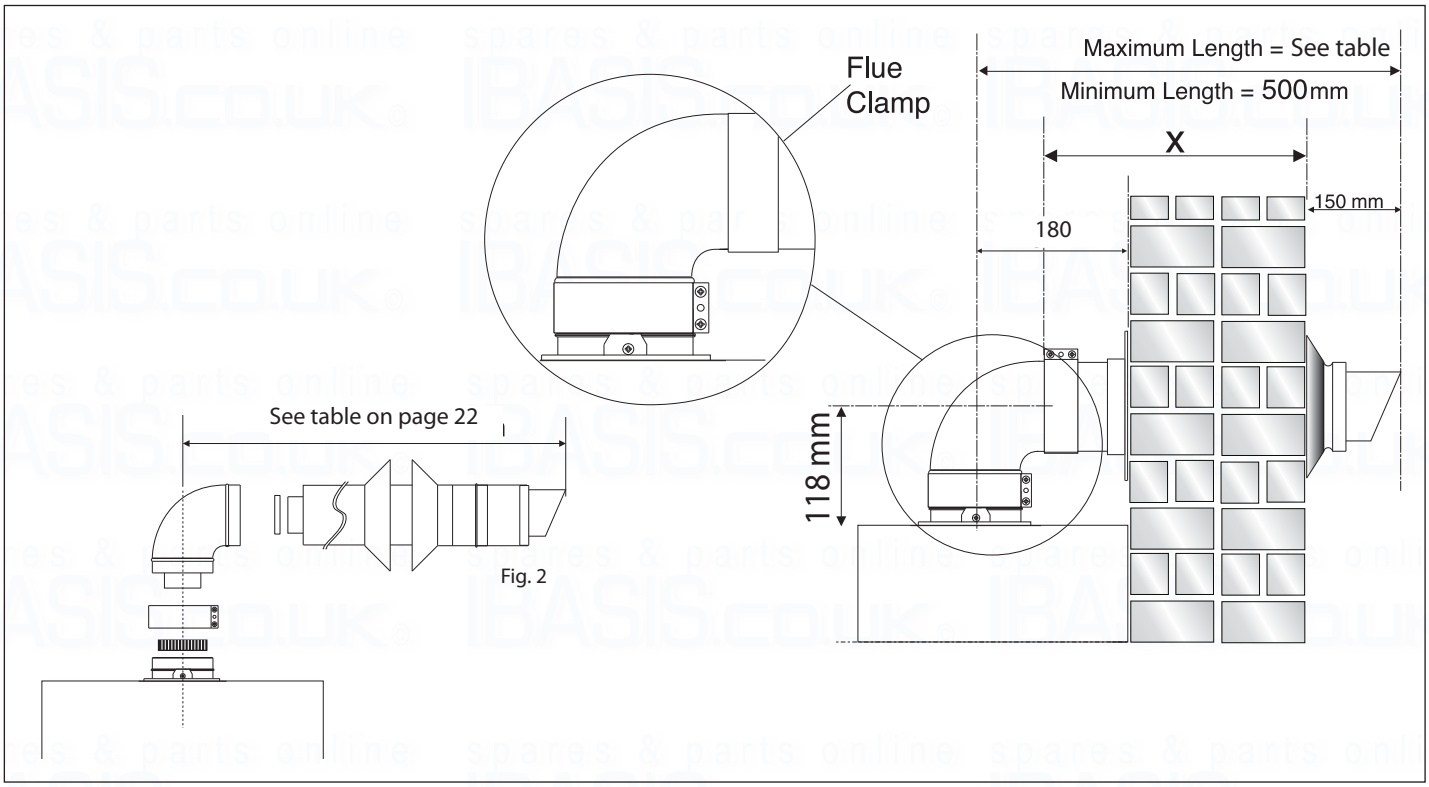

Fig. 2

Warning

The exhaust gas ducts must not be in contact with or close to inflammable material and must not pass through building structures or walls made of inflammable material.

When replacing an old appliance, the flue system must be changed.

Important

Ensure that the flue is not blocked.

Ensure that the flue is supported and assembled in accordance with these instructions.

Fitting the Coaxial Flue

(Ø 60 / 100 Horizontal)

Contents:

1x Silicone O-Ring (60mm)
1x Elbow (90°)
2x Wall Seals (Internal & External)
1x Flue Pipe including Terminal (1 metre - 60/100)
2x Flue Clamps
4x Screws
2x Seals

Once the boiler has been positioned on the wall, fit the rubber flue seal into the internal flue turret (see diagram opposite),

insert the elbow into the socket and rotate to the required position. Note: It is possible to rotate the elbow 360° on its vertical axis.

Using the flue clamp, seals and screws supplied (Fig 4) secure the elbow to the boiler.

The 1 metre horizontal flue kit (3318073) supplied is suitable for an exact X dimension of 753mm.

Measure the distance from the face of the external wall to the face of the flue elbow (X - Fig 2), this figure must now be subtracted from 753mm, you now have the total amount to be cut from the plain end of the flue.

Draw a circle around the outer flue and cut the flue to the required length taking care not to cut the inner flue, next cut the inner flue ensuring that the length between the inner and outer flue is maintained. (Fig 4).

e.g.
X = 555mm
753-555 = 198mm (Length to be cut from the plain end of the flue).

Once cut to the required length, ensure that the flue is free from burrs and reassemble the flue. If fitting the flue from inside of the building attach the grey outer wall seal to the flue terminal and push the flue through the hole, once the wall seal has passed through the hole, pull the flue back until the seal is flush with the wall. Alternatively, the flue can be installed from outside of the building, the grey outer seal being fitted last.

Should the flue require extending, the flue connections are push fit, however, one flue bracket should be used to secure each metre of flue.

Note: See table for maximum and minimum flue runs.

In the event that extension pieces need to be shortened, they must only be cut at the male end and it must be ensured that the inner and outer flue remain flush.

Fig. 3

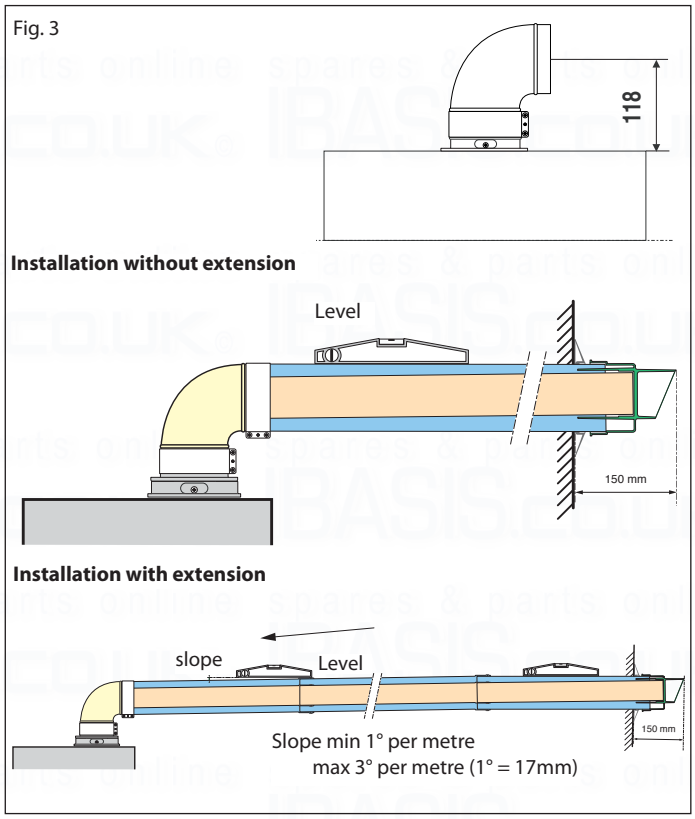

Clamp

Fig. 4

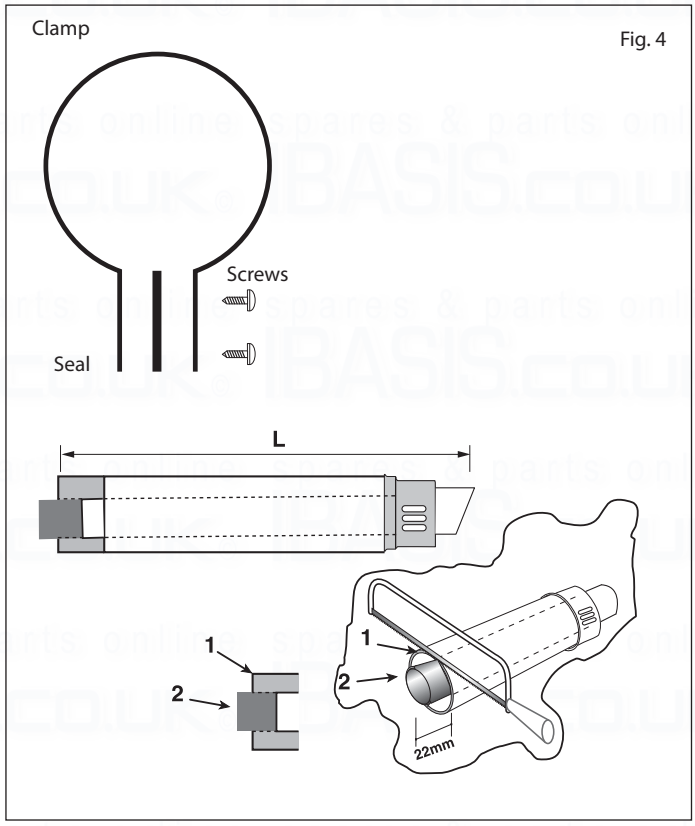

Fitting the 5" Flue (Ø 80 / 125 Horizontal/vertical)

Once the boiler has been positioned on the wall, it is necessary to insert the Ø80/125 adaptor (Fig. 5) for both horizontal and vertical flue runs into the boiler flue socket (not supplied with flue kit - Part No 3318095).

Push the adaptor onto the boiler's flue connection, grease the seals then add extensions or elbows as required, secure the adaptor, using the clamp and screws provided.

To fit extensions or elbows it is first necessary to ensure that the lip seal is fitted correctly into the inner flue, once verified, it is simply necessary to push them together, no clamps are necessary to secure the flue components.

Before proceeding to fit the flue, ensure that the maximum flue length has not been exceeded (see the tables) and that all elbows and bends have been taken into consideration. For each additional 90° elbow 1 metre must be subtracted from the maximum flue length, and for each 45° 0.5 metres must be subtracted from the maximum flue length (the height of the vertical adaptor and a 45° bend can be seen in Fig.6 and a 90° bend in Fig. 7).

Note: DO NOT cut the vertical flue kit.

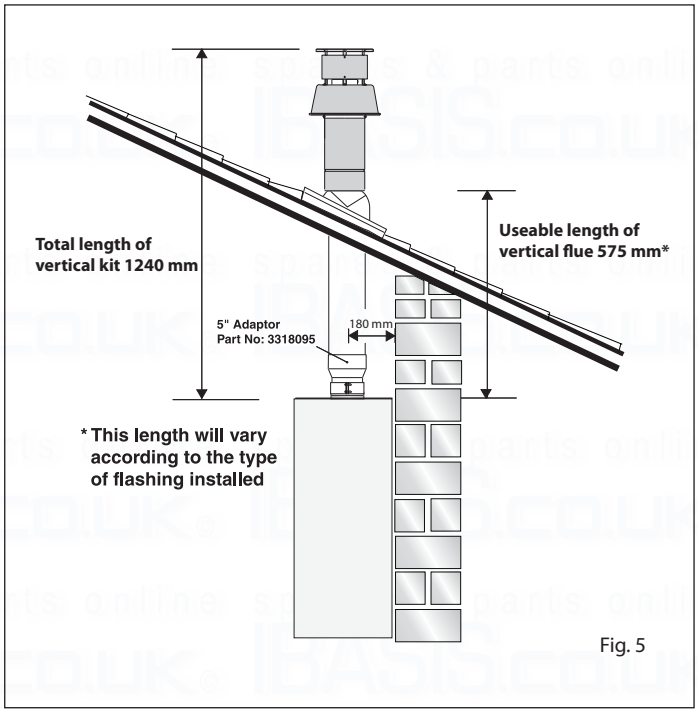

Fig. 5

Fitting the Coaxial Flue (Ø 60 / 100 Vertical)

Note: See table for maximum and minimum flue runs.

Contents:
1x Silicone O-Ring (60mm)
1x Conical Adaptor (60/100mm)
1x Vertical Flue Kit (80/125mm)
3x Screws

The vertical flue kit is supplied with a specially designed weather proof terminal fitted, which can be used either with a flat roof or a pitched roof.

The vertical flue kits useable lengths with the pitched roof flashings are indicated in Fig. 7.

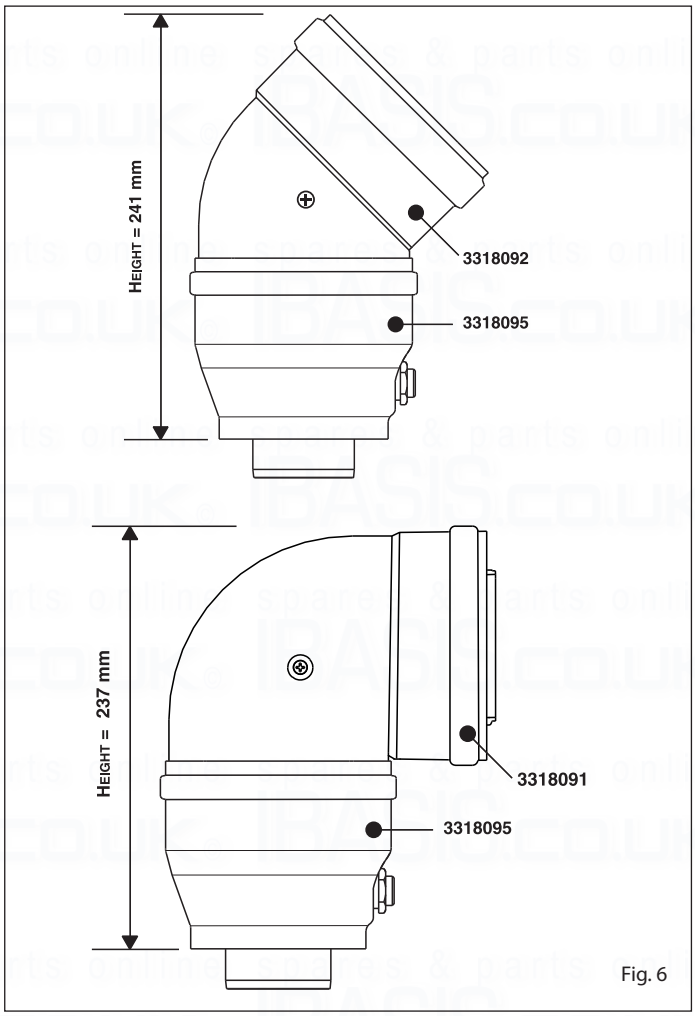

Fig. 6

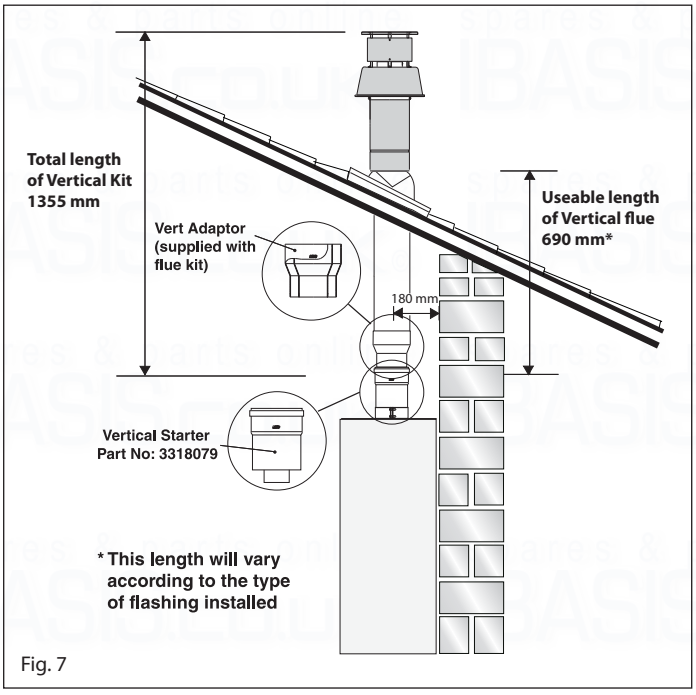

Fig. 7

Before proceeding to fit the flue, ensure that the maximum flue length has not been exceeded (see the tables) and that all elbows and bends have been taken into consideration. For each additional 90° elbow 1 metre must be subtracted from the maximum flue length, and for each 45° 0.5 metres must be subtracted from the maximum flue length (the height of the vertical adaptor and a 45° bend can be seen in Fig. 8).

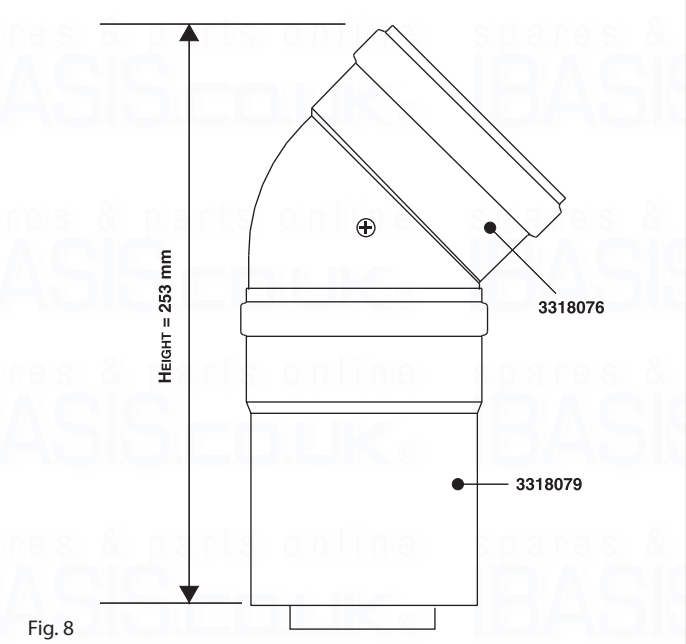

Fig. 8

Mark the position of the flue hole in the ceiling and/or roof (see Fig. 7 for distance from wall to the centre of the flue).

Cut a 130mm diameter hole through the ceiling and/or roof and fit the flashing plate to the roof.

DO NOT cut the vertical flue kit.

To connect the vertical flue kit directly to the boiler, place the vertical starter kit (Part No. 3318079) (see Fig. 7) onto the exhaust manifold and secure with the clamp, fit the vertical adaptor onto the vertical starter kit (Note: there is no need to use a clamp to secure this as it is a push fit connection), the vertical flue kit must then be inserted through the roof flashing, this will ensure that the correct clearance above the roof is provided as the terminal is a fixed height.

Should extensions be required, they are available in 1 metre (Part No. 3318077) and 500mm (Part No. 3318078) lengths. They must be connected directly to the vertical starter kit before connecting the adaptor to allow the vertical flue kit to be fitted. In the event that extension pieces need to be shortened, they must only be cut at the male end and it must be ensured that the inner and outer flue remain flush.

When using the vertical flue system, action must be taken to ensure that the flue is supported adequately to prevent the weight being transferred to the appliance. Use 1 flue bracket per extension.

When the flue passes through a ceiling or wooden floor, there must be an air gap of 25mm between any part of the flue system and any combustible material. The use of a ceiling plate will facilitate this. Also when the flue passes from one room to another a fire stop must be fitted to prevent the passage of smoke or fire, irrespective of the structural material through which the flue passes.

Fitting the Twin Pipe (Ø80 / 80)

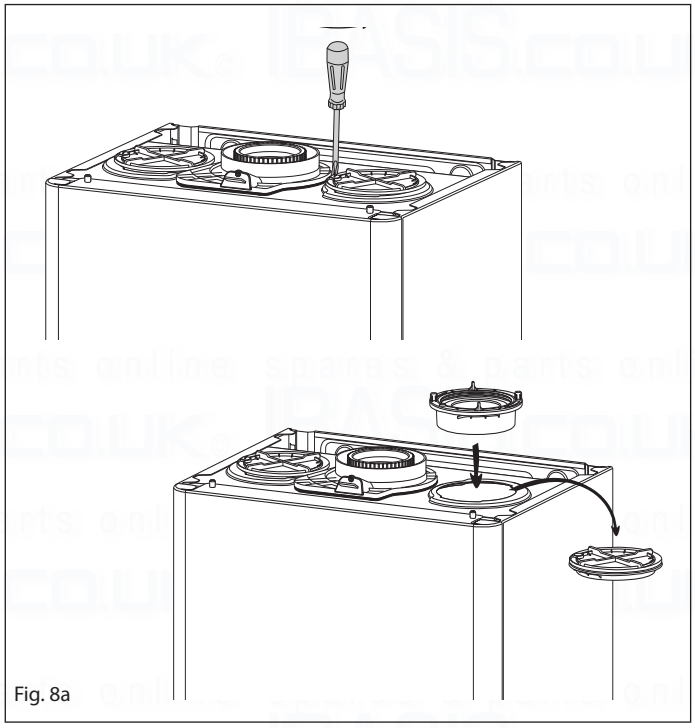
Fig. 8a

Note: See table for maximum and minimum flue runs.

Where it is not possible to terminate the flue within the distance permitted for coaxial flues, the twin flue pipe can be used by fitting a special adaptor to the flue connector and using the aperture for the air intake located on top of the combustion chamber.

Always ensure that the flue is adequately supported, using one flue bracket per extension and avoiding low points. (ARISTON supply suitable clamps as Part No. 3318015).
To utilise the air intake it is necessary to:

1) Take the air intake cover off the top of the appliance
2) Assemble the air inlet adaptor - see fig. 8a

The twin flue pipes can be fitted with or without additional elbows and need no clamps, simply ensure that the red o-ring is inserted in the female end of the flue pipe and push the extension piece fully into the previous section of flue pipe or elbow. Check that the o-ring is not dislodged when assembling the flue (greasing the seal will aid assembly).

When running the twin flue pipe vertically it can be converted back to coaxial flue to enable vertical termination with a coaxial kit by use the pipe bridge (Twin - Coaxial Adaptor - Part No. 3318089).

It is not possible to terminate concentrically horizontally. Termination is only possible with separate air and exhaust terminals.
When siting the twin flue pipe, the air intake and exhaust terminals must terminate on the same wall, the centres of the terminals must be a minimum of 280 mm apart and the air intake must not be sited above the exhaust terminal (refer to Fig. 10). The air intake pipe can be run horizontally, however, the terminal and the final 1 metre of flue must be installed either horizontally or with a slight fall away from the boiler to avoid rain ingress.

It is also strongly recommended that the air intake pipe run be constructed of insulated pipe to prevent condense forming on the outside of the tube.

The maximum permissible flue length for twin flue is dependent on the type of run used (see table below).

For further information relating to flue runs not illustrated, please contact the Technical Department on 0870 241 8180.

For coaxial systems, the maximum flue lengths listed in the table below take into account an elbow.
For twin flue systems the maximum flue lengths listed in the table below includes the exhaust gas/air intake terminal.

Type 5 outlets should respect the following instructions:

1- Use the same ø 80 mm flue pipes for the air intakes and exhaust gas ducts.
2- If you need to insert elbows in the air intake and exhaust gas ducts, you should consider for each one the equivalent length to be included in the calculation of developed length.
3- The exhaust gas duct should jut above the roof by at least 0.5 m.
4- The intake and exhaust gas ducts in Type C13 and C53 must be installed on the same wall, or where the exhaust is vertical and the air intake horizontal, the terminals must be on the same side of the building.

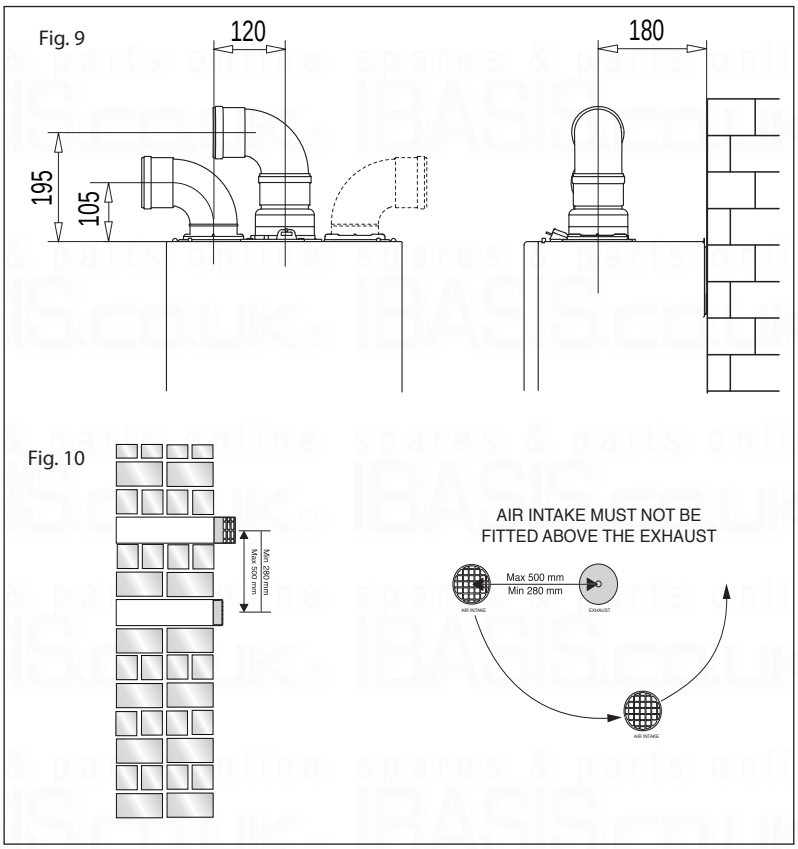

Table of flue gas exhaust duct lengths

Type		Maximum Extension Exhaust-air (m)						Diameter of pipe (mm)
		E-COMBI 24 E-SYSTEM 24		E-COMBI 30 E-SYSTEM 30		E-COMBI 38		
		MIN	MAX	MIN	MAX	MIN	MAX	
Coaxial System	C13 C33	0,5	12	0,5	12	0,5	6	ø 60/100
	C13 C33	0,5	36	0,5	36	0,5	18	ø 80/125
Twin-pipe System	C13 C33	S1 = S2		S1 = S2		S1 = S2		ø 80/80
		0,5/0,5	36/36	0,5/0,5	48/48	0,5/0,5	18/18	
	C53	1 + S2		1 + S2		1 + S2		ø 80/80
		1/0,5	1/83	1/0,5	1/70	1/0,5	1/42	

S1 = Air intake S2 = Flue gas exhaust

S1 = S2 - Air intake and flue gas exhaust equal lengths
S1 + S2 - Air intake and flue gas exhaust unequal lengths

Type of air suction/flue gas exhaust ducting

Combustion air intake from outside		
C13	Flue gas exhaust and air suction duct through external wall in the same range of pressure	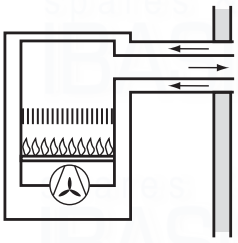
C33	Flue gas exhaust andair suction duct from outsidewithroof terminalin the same range of pressure	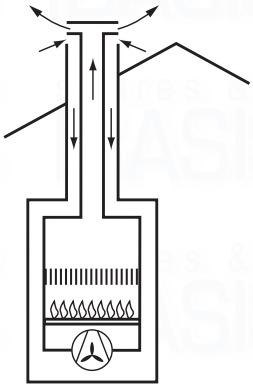
C53	Flue gas exhaust leading outside and air suction duct through external wall not in the same range of pressure	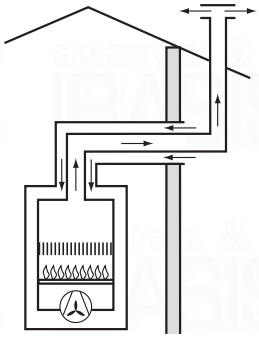

WARNING
Before performing any work on the boiler, first disconnect it from the electrical power supply using the external bipolar switch and remove the fuse.

Electrical connections

For increased safety, ask a qualified technician to perform a thorough check of the electrical system.
The manufacturer is not responsible for any damage caused by the lack of a suitable earthing system or by the malfunctioning of the electricity mains supply.
Make sure that the system is able to withstand the maximum power used by the boiler (this is indicated on the appliance data plate).
Check that the section of the wires is suitable and is not less 0.75 mm^2
The appliance must be connected to an efficient earthing system if it is to operate correctly.
The power supply cable must be connected to a 230V-50Hz network, where the L-N poles and the earth connection are all respected.
Important!
In the event that the power supply cable has to be changed, replace it with one with the same specification.

Power supply cable

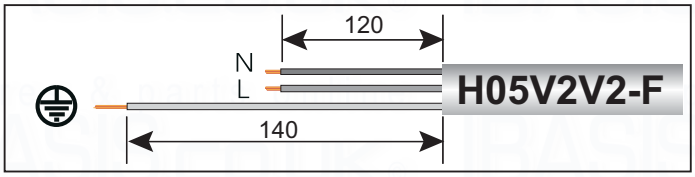

Important!
The appliance is supplied with a fly-lead already connected, this must be connected to a 240V supply fused at 3 amp it must give complete electrical isolation of the appliance, by use of a fused double pole isolator having a contact separation of at least 3mm in all poles or alternatively by means of a 3A fused three pin plug and unswitched shuttered socket outlet both complying with BS1363.

The use of multiplugs, extension leads or adaptors is strictly prohibited.
It is strictly forbidden to use the piping from the hydraulic, heating and gas systems for the appliance earthing connection.
The boiler is not protected against the effects caused by lightning. If the boiler fuses need to be replaced, use 2A rapid fuses.

Peripheral unit connection

To access peripheral unit connections carry out the following steps:
- Disconnect the boiler from the power supply
- Remove the casing by unhooking it from the instrument panel
- Rotate the control panel while pulling it forwards
- Unscrew the three screws on the back cover of the instrument panel
- Unhook the right side clip and the right front clip; then lift the flap

The following connections are located here:
- the room thermostat 1.

Caution!
For the connection and positioning of the wires belonging to optional peripheral units, please refer to the installation manuals of these units.

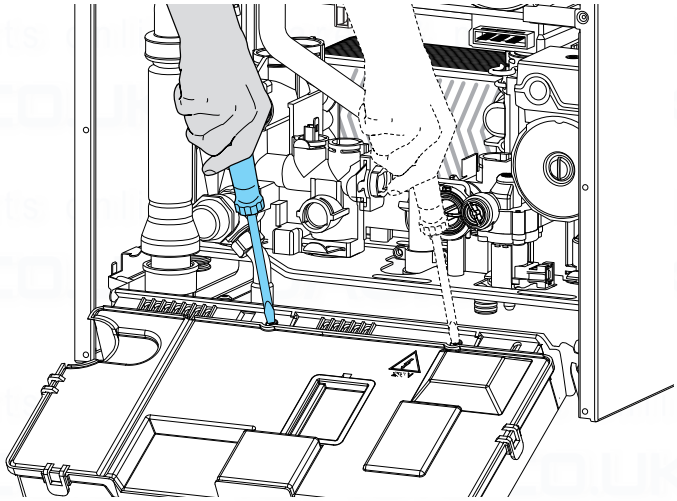

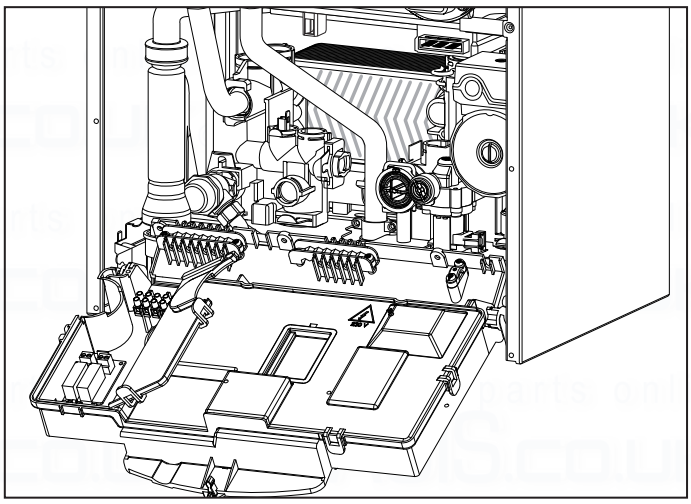

Room Thermostat / Remote Clock Connection

The boiler connections for external controls are 12V DC and so only controls of 12V DC that have voltage free contacts should be used.
The boiler connections for external controls are 12V DC and so only controls of 12V DC that have voltage free contacts should be used.

To connect a room thermostat, it is necessary to:

1. Open the control panel
2. Loosen the cable clamp using a screwdriver and insert the wires leading from the room thermostat
3. Connect the wires to the terminals as indicated in the figure below, removing the link
4. If a remote time clock is to be fitted, (using a volt free switching time clock) connect the switching wires from the time clock following points 1 - 3 above (Disconnect internal time clock)
5. If using an external time clock and room thermostat, these must be connected in series as shown in diagram C, (Disconnect internal time clock)
6. Ensure that they are well connected and not subject to stress when the control panel is closed

Note: When connecting the boiler to external controls, do not run 240V cables for switching circuits (which are low voltage) together use seperate cables to prevent induced voltage on the low voltage circuits.

Diagram A
Room Thermostat

Diagram B
External Timeclock / Programmer

Diagram C
External Room Thermostat and Volt Free Timeclock / Programmer Wired in Series

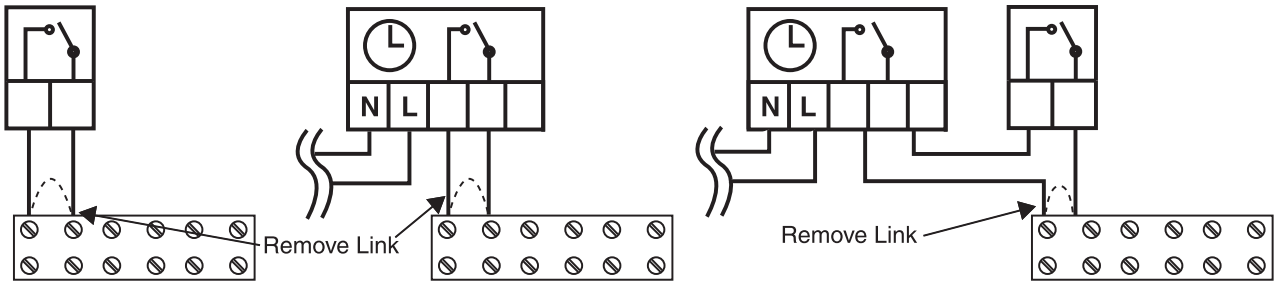

Connector TA on Terminal block (low voltage switching)

Connector TA on Terminal block (low voltage switching)

Connector TA on Terminal block (low voltage switching)

Timeclock and Room Thermostat
low voltage compatible

Note: y plan system switch 240v and are therefore not suitable system control systems unless a suitable relay is used to switch the low voltage control circuit.
Do not connect 240v to the TA1 switching circuit. Connectiong 240v to the TA1 switching circuit will damage th P.C.B. and invalidate appliance warranty.

Electrical diagram

For increased safety, ask a qualified technician to perform a thorough check of the electrical system.
The manufacturer is not responsible for any damage caused by the lack of a suitable earthing system or by the malfunctioning of the electricity mains supply.

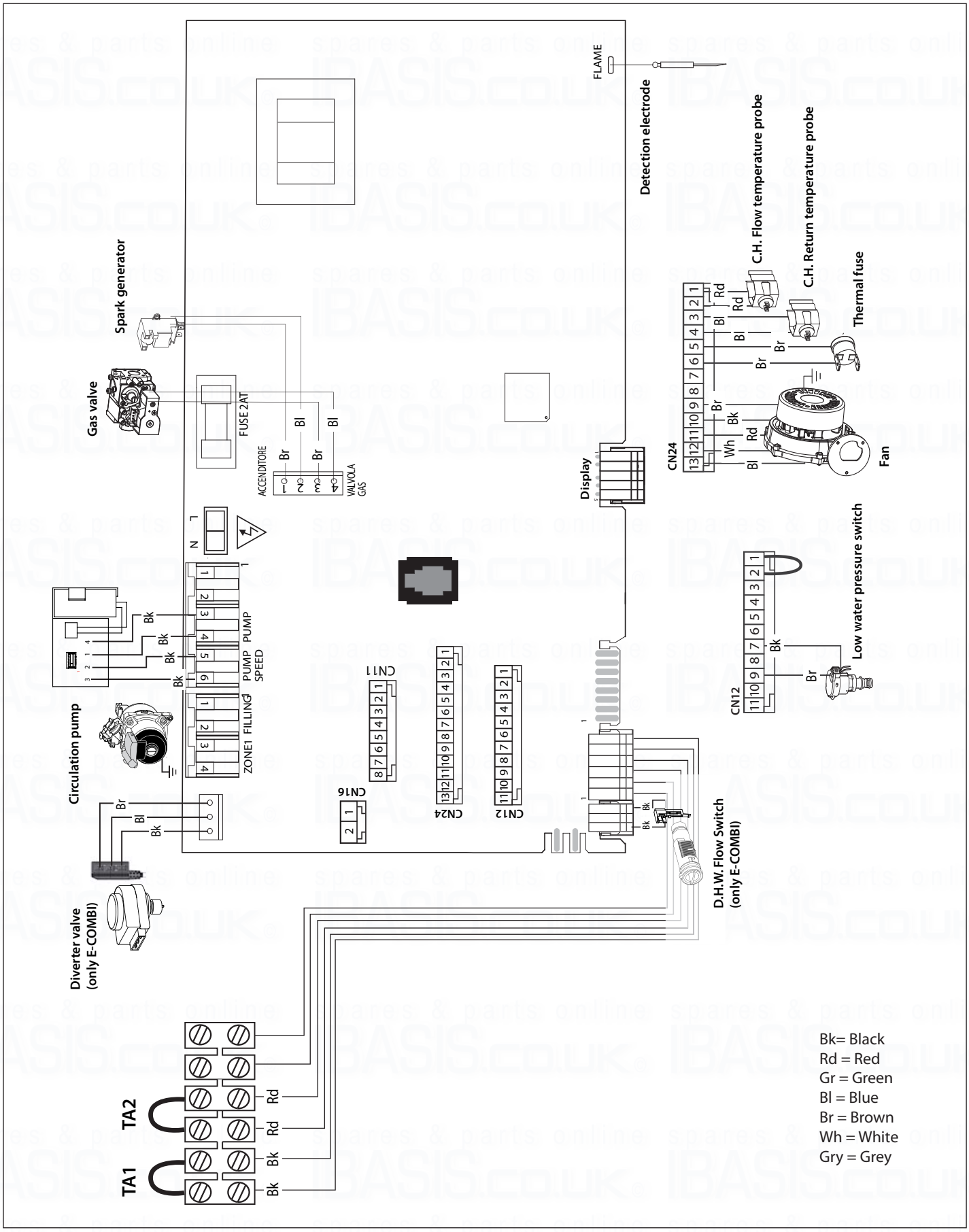

S Plan Wiring Diagram

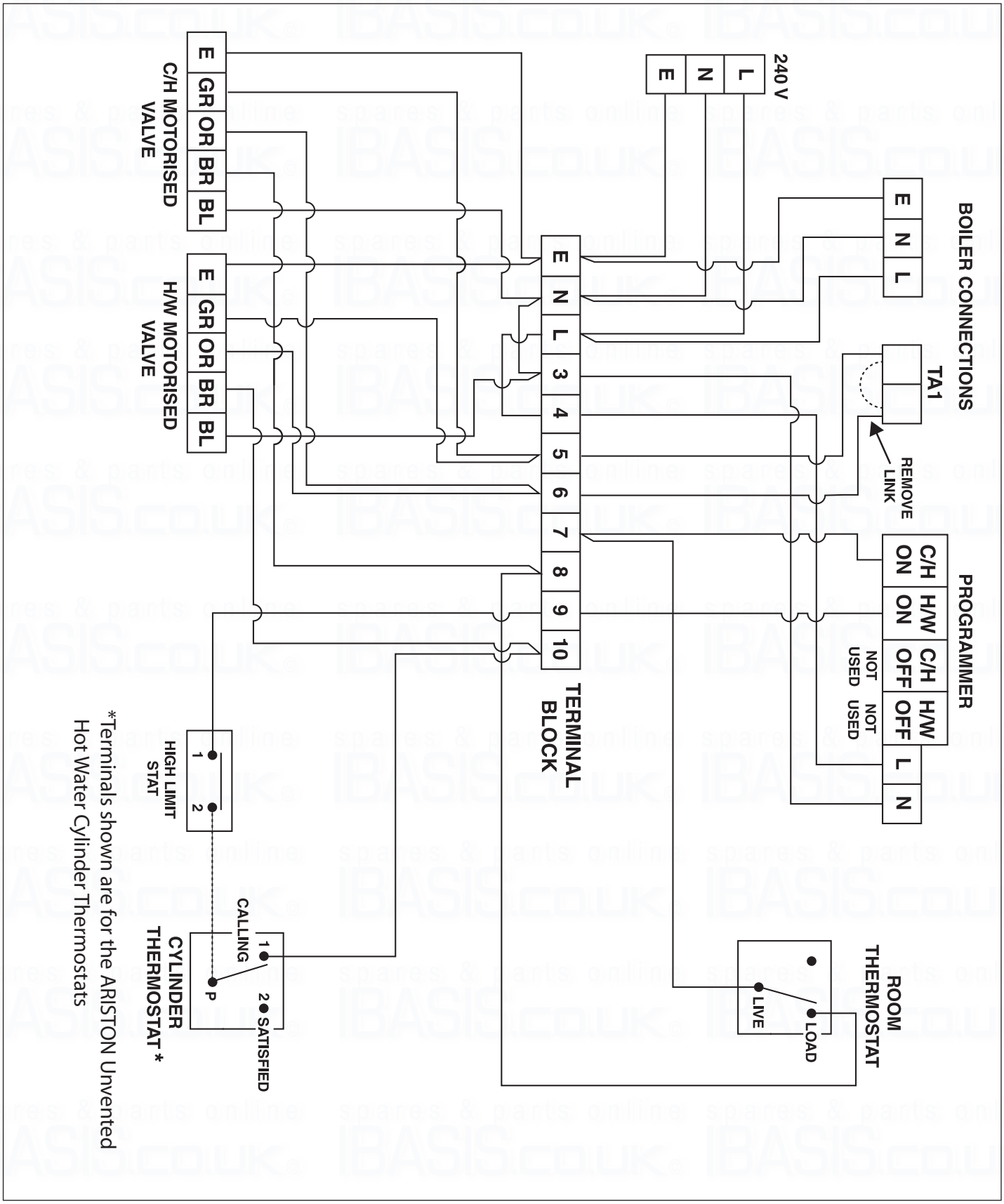

Note: Y plan system not suitable. See notes on page 25

Initial preparation

At the time of commissioning, complete all relevant sections of the Benchmark Checklist located on the inside back pages of this document.

ARISTON Thermo UK LTD Limited support the Benchmark initiative. On pages pages 53 and 54 of this manual the Benchmark Commissioning Checklist and Service interval Record can be found. It is important that this is completed in the presence of your customer, they are shown how to use it, and it is signed by them. Please instruct your customer that they must have this manual with them whenever they contact a service engineer or us.

Preliminary electrical system checks to ensure electrical safety must be carried out by a competent person i.e. polarity, earth continuity, resistance to earth and short circuit.

Electricity supply

- Check that the voltage and frequency of the electricity supply correspond to the data shown on the boiler data plate;
- Make sure that the earthing connection is efficient.

Filling the Heating System:

Remove the front casing panel and lower the control panel as described on page 16).

Open the central heating flow and return cocks supplied with the connection kit;

Lift the cap on the automatic air release valve and leave open permanently;

Close all air release valves on the central heating system;

Gradually open the valves at the filling point (filling loop) until water is heard to flow, do not open fully;

Open each air release tap starting with the lowest point and close them only when clear water free of air is visible;

Purge the air from the pump by unscrewing the pump plug anti-clockwise, also manually rotate the pump shaft in the direction indicated by the pump label to ensure the pump is free;

Refit the pump plug;

Continue filling the system until at least 1.5 bar registers on the pressure gauge;

Inspect the system for water tightness and remedy any leaks discovered.

Important!

Manually vent the heat exchanger at the manual air vent. Failure to vent adequately may damage the heat exchanger (page 7, legend 2).

Filling of the DHW System (Combi only):

Close all hot water draw off taps;

Open the cold water inlet cock supplied with the connection kit;

Slowly open each draw off tap and close them only when clear water, free of bubbles, is visible.

Gas Supply:

Inspect the entire installation including the gas meter and test for tightness. The entire installation should be in accordance with the relevant standards. In GB this is BS 6891 and in IE this is the current edition of I.S.813.

The connection on the the appliance is a 15 mm nut and olive located at the rear of the gas service cock.

If the gas supply serves other appliances, ensure that an adequate supply is available both to the boiler and the other appliances when they are in use at the same time.

Pipe work must be of an adequate size.

Pipes of less than 22 mm should not be used, final being 15 mm.

Open the gas cock (supplied with the connection kit) to the appliance and check the gas connection on the appliance for leaks.

Water Treatment:

The boiler is equipped with a stainless steel heat exchanger.

The detailed recommendations for water treatment are given in BS 7593:1992 (Treatment of water in domestic hot water central heating systems); the following notes are given for general guidance;

If the boiler is installed on an existing system, any unsuitable additives must be removed;

Under no circumstances should the boiler be fired before the system has been thoroughly flushed; the flushing procedure must be in line with BS7593:1992.

Firstly fill the central heating system with the power off, and flush through cold, fill the central heating system again, adding a flushing detergent, run the boiler on central heating until it reaches its operating temperature and flush the system, refill the system with a suitable corrosion inhibitor,

Note: Failure to carry out the flushing procedure will result in the warranty becoming void.

First ignition operation

Date . . . . . .
Installer . . . . . .

1. Check the electrical supply.

Complete . . . . . .

2. Check the type of gas and change the gas if necessary.

Complete . . . . . .

3. Check the gas tightness.

Complete . . . . . .

6. Measure the gas inlet pressure. standing + warming pressure

Complete . . . . . .

5. Check the exhaust flue. See page 18

Complete . . . . . .

6. Fill the installation. See page 30

Complete . . . . . .

7. Check the hydraulic water tightness.

Complete . . . . . .

8. Spin the pump.

Complete . . . . . .

9. Set the heating power. See page 31

Complete . . . . . .

10. Set up heating controls

Complete . . . . . .

11. Balance the central heating circuit.

Complete . . . . . .

12. Check the boiler in DHW mode (combi only)

Complete . . . . . .

13. Adjust DHW flow rate on the boiler (if necessary).

Complete . . . . . .

14. Analyse the combustion (see page 33)

Complete . . . . . .

15. Check the ionisation current.

Complete . . . . . .

16. Explain to the end user the the boiler operation.

Complete . . . . . .

17. At the time of commissioning, complete all relevant sections of the Benchmark Checklist located on the inside back pages of this document.

Complete . . . . . .

irst ignition

1. Make sure that:
- The gas valve is closed;
- The electrical connection has been properly carried out. Make sure that the green/yellow earthing wire is connected to an efficient earthing system;
- Use a screwdriver to lift the cap on the automatic air relief valve;
- Switch on the boiler (by pressing the ON/OFF button), the green led **3** will illuminate indicating that the boiler is ready to operate. Turn the CH button **5** between min. and max position. The pump will start and the burner will attempt to light, after 7 seconds the boiler will lock out because there is no gas; the red Led **8** illuminates.

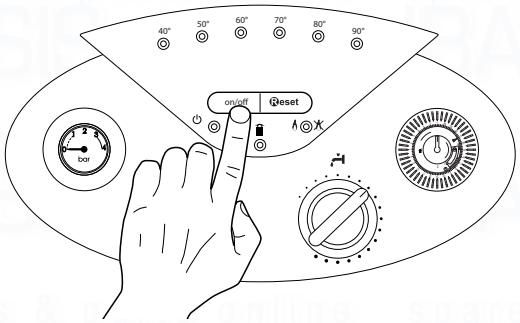

- Bleed the air from the radiators;
- The flue should be suitable and free from any obstructions;

2. Open the gas cock and check the connection seals, including the boiler connection joints, making sure that the meter does not detect any passage of gas. Eliminate any leaks.

3. Unlock the boiler by pushing the reset button. The burner will light, if the first start fails repeat the operation until the burner lights.

Setting
Regulating the central heating ignition delay

Adjust the central heating ignition delay

1. Push ON/OFF button for 10 seconds, the red reset led blinks.
2. Pressing the RESET button, the green led blinks.
3. Adjusting with the CH knob (Temporisation 0, 1, 2, 3, 4, 5, 6 minutes see table).

Green Leds Temperature indicator						TAC	○ = no led lit ● = lit
40	50	60	70	80	90 *		
○	○	○	○	○	○	0 min	
●	○	○	○	○	○	1 min	
●	●	○	○	○	○	2 min	
●	●	●	○	○	○	3 min	
●	●	●	●	○	○	4 min	
●	●	●	●	●	○	5 min	
●	●	●	●	●	●	6 min	
* This LED is red							

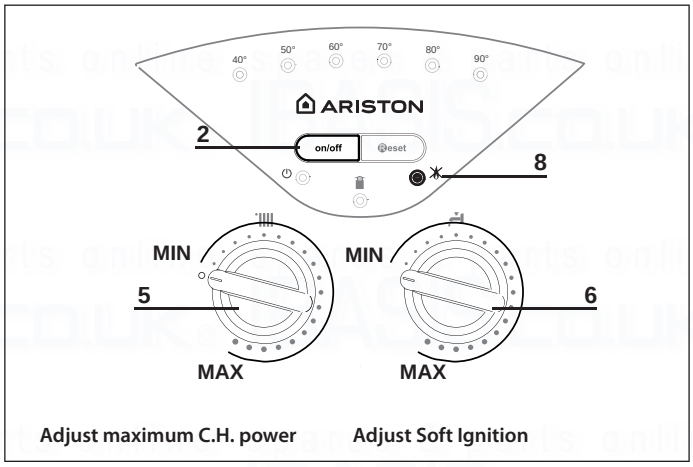

Regulating the maximum central heating power & soft ignition

Regulate the maximum central heating power (between minimum and maximum) to adjust the central heating power and the soft ignition :

Adjust the setting on the front panel

1. Push ON/OFF button for 10 seconds, the red reset led blinks.
2. Adjusting with the CH knob the maximum CH power between 0 and 99 % (see table).
3. Combi only adjusting with the DHW knob the soft ignition between 0 to 99% (see table). The percentage level is visualized by the green led.
4. To store the new values of settings, it is enough to push ON/OFF button.

IMPORTANT!!
For E-SYSTEM boiler
To adjust the Soft Ignition it is necessary remove the cover using a screwdriver, see fig. a, and alter the soft ignition by adjusting the potentiometer, see fig. b.

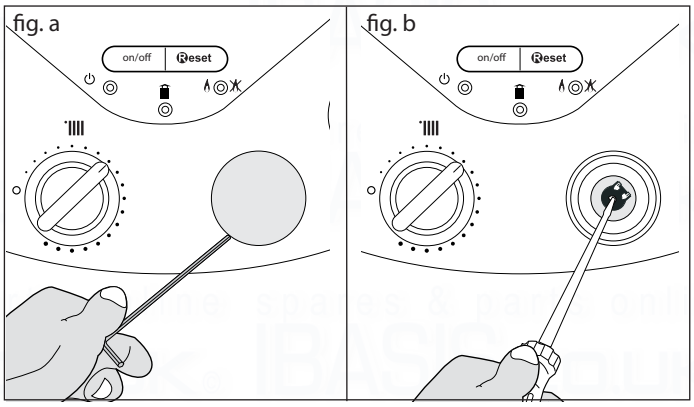

Green Leds Temperature indicator						Max adjustable power and soft ignition	○ = no led lit ● = lit
40	50	60	70	80	90 *		
○	○	○	○	○	○	0 to 39 %	
●	○	○	○	○	○	40 to 49 %	
●	●	○	○	○	○	50 to 59 %	
●	●	●	○	○	○	60 to 69 %	
●	●	●	●	○	○	70 to 79 %	
●	●	●	●	●	○	80 to 89 %	
●	●	●	●	●	●	90 to 99 %	
* This LED is red							

Test function and combustion analysis

The boiler has two pressure taps to measure the combustion gas temperature, the combustive air and the concentrations of O_2 and CO_2 on the outside of the flue gas header.
To access these pressure taps, unscrew the screw which holds the blanking cover and its seal together.

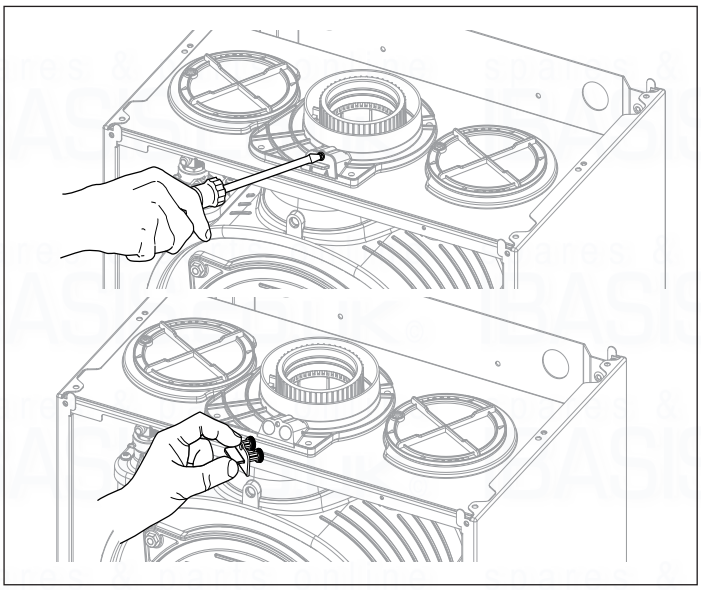

Checking the gas setting

To carry out analyses of combustion, the test function must be activated.

Maximum gas flow combustion analysis

Activate the test function at the maximum heating power, pushing for 5 seconds the **RESET** until the yellow led **9** blinks (also 60°C led is lit to indicate that Chimney is at max. CH absolute) The rotate the CH knob to the min., intermediate position or max position it's possible to switch between min, max CH absolute and max DHW power (respectively the 40°C, 60°C and 80°C are lit to indicate the power level.
The function is automatically deactivated after 10 minutes or by pressing the **RESET** button.
Wait for the boiler to stabilise before carrying out the combustion analyses. Check the CO_2 value according to the table below.
Important: do not remove silencer **17**
N.B. When the front combustion chamber panel is open, the CO_2 value drops by 0.3%.

CO_2 maximum minimum	24	30	38
	CO_2 (%)		
G20	9.0 ± 0.2	9.0 ± 0.2	9.4 ± 0.2
G31	10.7 ± 0.2	10.0 ± 0.2	10.6 ± 0.2

If the values taken differ from the table, adjust the gas valve following the procedure described below.

Adjust the CO_2 content to **± 0.2** by turning setting screw **50** (**2.5 mm allen key**)
- tighten to lower the CO_2 value
- unscrew to increase the CO_2 value

Set the content by turning the screw about a 1/4 of a turn then wait after each change for approximately 1 minute for the CO_2 value to stabilise, then repeat.

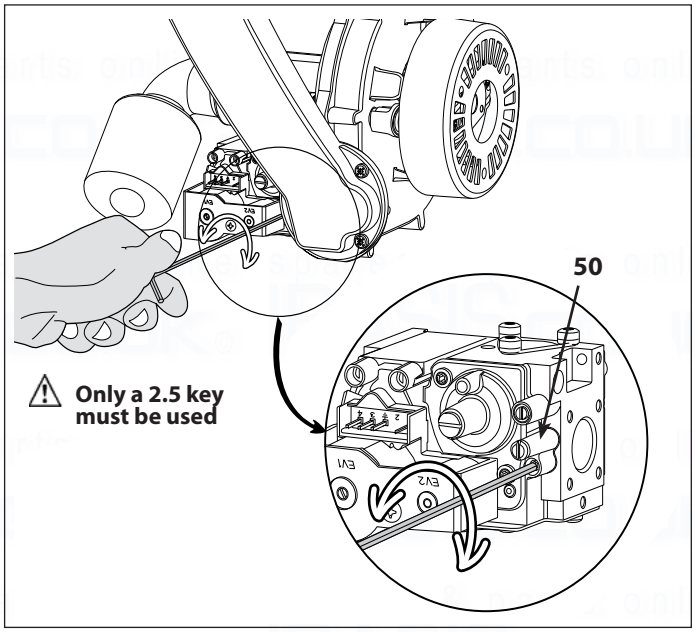

Minimum gas flow combustion analysis

Activate the test function at minimum power in either heating or domestic hot water production.
Wait for the boiler to stabilise before carrying out the combustion analyses. Check the CO_2 value according to the table above.
Important: do not remove silencer **17**
N.B. When the combustion chamber is open, the CO_2 value drops by 0.3%.
If the values taken differ from the table, adjust the gas valve following the procedure described below.

To adjust the CO_2 value, remove cap, adjust the CO_2 content to **± 0.2** by turning setting screw **51** (**4 mm allen key**)
- unscrew to lower the CO_2 value
- tighten to increase the CO_2 value

Set the content by turning the screw about a 1/4 of a turn then wait after each change for approximately 1 minute for the CO_2 value to stabilise, then repeat.
Once the settings and analyses are complete, exit test mode by pressing Reset and reposition the blanking cover and its seal correctly.

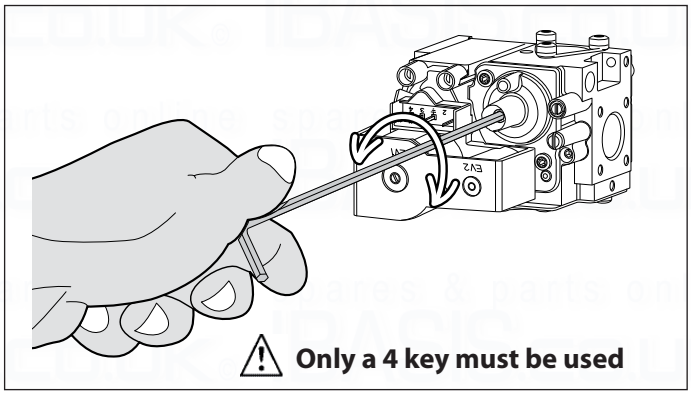

Gas setting		24		30		38	
		G20	G31	G20	G31	G20	G31
lower Wobbe index 15°C, 1013 mbar) (MJ/m3)		45.67	70.69	45.67	70.69	45.67	70.69
gas valve restrictor(ø)		NO	3.80	NO	4.50	NO	5.25
gas flow max/min (15°C, 1013 mbar) (nat - m3/h) (GPL - kg/h)	max D.H.W	2.65	1.94	3.17	2.33	4.02	2.95
	max C.H.	2.33	1.71	2.96	2.17	3.28	2.41
	min	0.58	0.43	0.69	0.50	0.79	0.58

Boiler protection devices

The boiler is protected from malfunctioning by means of internal checks performed by the electronic microprocessor P.C.B., which stops the boiler from operating if necessary.
In the event of the boiler being shut off in this manner, the led code shows the type of shut-off and the reason behind it.
There are two types of shut-off:

Safety shut-off

This type of error is "volatile", which means that the boiler starts up again automatically as soon as the problem which caused the shut-off is removed; the yellow led **9** blinks and green CH temperature leds **1** indicate the error code- see table below.
As soon as the cause of the shut-off disappears, the boiler starts up again and continues to operate normally.

Note : In the event of insufficient water pressure inside the heating circuit, the boiler will perform a safety shut-off (yellow led **9** blinks - leds 50-60 blink – see table). To re-pressurise the boiler, it will be necessary to connect the silver flexible hose supplied to the two isolating points underneath the boiler, once the hose is connected, open up both of the black quarter turn handles until the pressure reads 1.5 bar on the pressure gauge. If the pressure drops very frequently, there may be a water leak at some point in the system.

Shutdown

This type of error is "non-volatile", which means that it is not removed automatically.
The red led **8** light and green leds **1** indicate the error code- see table below.
To restore normal operation press the Reset button on the control panel.

Important
If this shutdown occurs frequently, contact an authorised Technical Service Centre for assistance. For safety reasons, the boiler will permit a maximum of 5 resets in 15 minutes (5 presses of the Reset button).

Anti-frost Device.

When the electrical supply is turned on the anti-frost function acts on the central heating flow temperature probe, independently from other safety devices.
If the primary circuit temperature is between 3°C and 8°C the pump will run (with the diverter valve switching between central heating and hot water every 1 minute) until the temperature reaches > 9°C.
If the flow temperature remains between 3°C and 8°C the pump will continue to run for a maximum of 20 minutes unless a temperature above > 9°C is detected in the central heating flow, after this the burner will fire (heating position) until a temperature of > 30°C is detected.
If the central heating flow temperature is < 3°C, the burner will fire (heating position) at minimum power until the temperature reaches > 30°C, the burner will go out.
If lockout is caused by overheat the burner will not fire but the pump will continue to run (heating position).
The anti-frost device activates only when the boiler operating correctly :
- the system pressure is correct;
- the boiler is electrically powered;
- there is a supply of gas.

Table summarising error codes

Green Leds Temperature indicator								Reset	Description	Note ❍ = flashing light ● = lit
40	50	60	70	80	90	yellow	red			
					●		●	X	Overheat	
●	●						●	X	Insufficient circulation	
	❍	❍				❍			Insufficient water pressure (request filling)	
		❍	❍			❍			C.H. Flow temp. probe circuit open / short circuit	
			❍	❍		❍			C.H. Return temp. probe circuit open / short circuit	
❍		❍				❍			External sensor circuit open / short circuit	
❍			❍			❍			Floor thermostat contact open	
		●	●				●	X	Heating delivery probe problem	
❍	❍					❍			Insufficient circulation	
			❍			❍			EEPROM error	
				❍		❍			Communication error	
❍	❍	❍	❍	❍		❍			Too many (> 5) resets in 15 minutes	
				●			●	X	Main P.C.B. error	
❍		❍				❍			Room sensor circuit open / short circuit	
							●	X	No flame detected	
	❍	❍	❍			❍			Flame detected with gas valve closed	
		●	●	●			●	X	Flame lift	
❍		❍		❍		❍			1st Ignition Failed	
	❍	❍		❍		❍			2nd Ignition Failed	
		❍	❍	❍		❍			Flame cut-off	
			●	●			●	X	Thermofuse open	
	●	●					●	X	Fan speed error	

Important
Maintenance is an essential part of the safe and efficient operation of the boiler and ensures its durability. It should be performed according to the instructions given in current legislation. Perform combustion analysis regularly in order to check the operating efficiency of the boiler and to make sure the combustion is within the boundaries set by current legislation.
Before beginning maintenance work:
- Disconnect the appliance from the electricity supply by turning the external bipolar switch to the "OFF" position;
- Remove the fuse;
- Close the gas valve and the central heating and domestic hot water system valves.

After the work has been completed the initial settings will be restored.

General comments
It is recommended that the following inspections be carried out on the boiler at least once a year:
1. Check the seals in the water part and, if necessary, replace the gaskets and restore the seal to perfect working order.
2. Check the seals in the gas part and, if necessary, replace the gaskets and restore the seal to perfect working order.
3. Visually check the overall condition of the boiler.
4. Visually check the combustion and, if necessary, disassemble and clean the burner.
5. Following the inspection detailed in point "3", disassemble and clean the combustion chamber, if necessary.
6. Following the inspection detailed in point "4", disassemble and clean the burner and injector, if necessary.
7. Cleaning the primary heat exchanger
8. Make sure the following heating safety devices are operating correctly:
   - temperature limit safety device.
9. Make sure that the following gas part safety devices are operating correctly:
   - absence of gas or flame safety device (ionisation).
10. Check the efficiency of the domestic hot water production process (test the flow rate and temperature).
11. Perform a general inspection of the boiler operation.
12. Remove oxide from the detection electrode using an emery cloth.
13. After servicing, complete the relevant Service Interval Record section of the Benchmark Checklist located on page 54 of this manual.
14. These checks are not exhaustive. Further mechanical, electrical and combustion maintenance checks may be required.
15. Analyse combustion, see page 33.

Operational test
After having carried out the maintenance operations, fill the heating circuit at a pressure of approximately 1.5 bar and release the air from the system.
Fill the domestic hot water system at the same time.
- Begin operating the boiler.
- If necessary, release the air from the heating system again.
- Check the settings and make sure all the command, adjustment and monitoring parts are working correctly.
- Check the flue system is sealed and operating correctly.

Draining procedures
The heating system must be drained using the following procedure:
- Switch off the boiler, make sure the external bipolar switch is in the OFF position;
- Loosen the automatic air relief valve;
- Open the system drain off cock and collect the escaping water in a container;
- Empty the water from the lowest points of the system (where applicable).

If the system is to be left inactive in areas where the room temperature may fall below 0°C during winter, we recommend that anti-freeze liquid is added to the water in the heating system in order to avoid the need for repeated draining; when this liquid is used make sure it is compatible with the stainless steel used for the bodywork of the boiler.
We recommend the use of anti-freeze products which contain PROPYLENE GLYCOLS as these inhibit corrosion and that they are used in conjunction with the anti-scaling and anti-corrosion function, in the quantities suggested by the manufacturer, at the mimimum temperature.
Regularly check the pH level of the water/anti-freeze mix in the boiler circuit and replace it when the value measured is lower than the limit prescribed by the manufacturer.
DO NOT MIX DIFFERENT TYPES OF ANTI-FREEZE.
The manufacturer will not be held liable for any damage caused by the appliance or the system due to the use of inappropriate anti-freeze substances or additives.

Draining the domestic hot water system (E-COMBI)
Every time there is a danger of freezing, the domestic hot water system must be drained as follows:
- Shut off the water mains inlet valve;
- Open all the hot and cold water taps;
- Empty the water from the lowest points of the system (where applicable).

WARNING
Before handling, empty all components which may contain hot water, performing bleeding where necessary.
Descale the components in accordance with the instructions provided on the safety data leaflet supplied with the product used, make sure the room is well ventilated, wear protective clothing, avoid mixing different products, and protect the appliance and surrounding objects.
Seal all openings used to take a gas pressure reading or to make any gas adjustments.
Make sure that the nozzle is compatible with the supplied gas.
If a smell of burning is detected or smoke is seen leaking from the appliance, or there is a smell of gas, disconnect it from the electricity supply, shut off the gas valve, open the windows and call for technical assistance.

Cleaning the primary exchanger
The inside of the primary exchanger is accessed by removing the burner. Wash with water and detergent using a non-metallic rifle-type brush, rinse with water.

The trap is accessed by emptying the condensate bowl located in the bottom section. Wash with water and detergent.
Replace the condensate collection bowl in its housing.
NB: In the event of prolonged of the appliance, the trap must be filled before being used again.
A lack of water in the siphon is dangerous and may cause exhaust gases to be released into the atmosphere.

Combustion Analyses
Details for flue gas analyses can be found on page 33.
Using a suitable calibrated combustion analyser, perform a combustion check. The CO_2 valus can be found on page 33.
if the vlues are correct the CO/CO_2 ratio must be less than 0.004.
Where combustion readings cannot be achieved carrefully check items such as the burner, heat exchanger, flue system for defect.
Once satisfactors readings hane been achieved complete the relevant service interval record selection of the Benchmark Commissioning Checklist at the rear of this publication.

General access

Tools 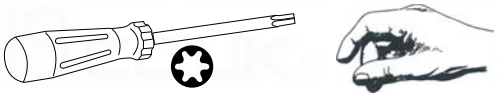			Time 3 min
1	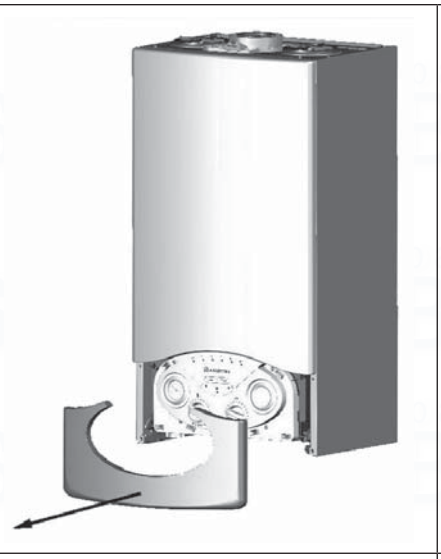		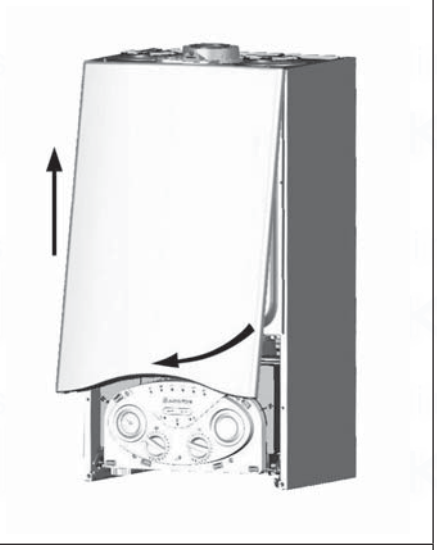
	Unclip the cover to remove	Remove the two screws	Remove the front panel
2			
	Lower the electrical box	Remove the combustion chamber front panel by releasing the clips	

Electrical unit

Control box access

Tools 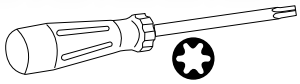			Time 4 min
1	Remove the front panel as above and pivot the electrical box	Remove the two screws and unlock the four clamps to gain access to the control box	

Fuse

Tools 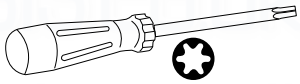			Time 5 min
1	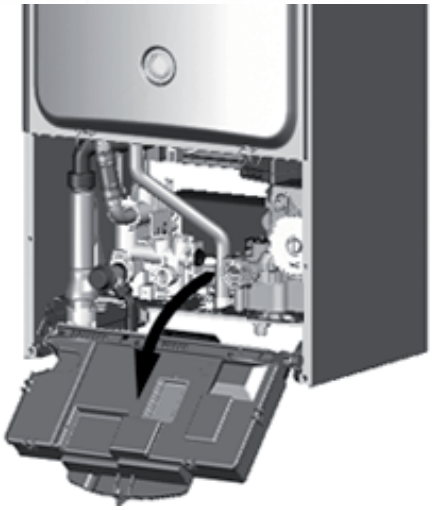 Open the control box as above	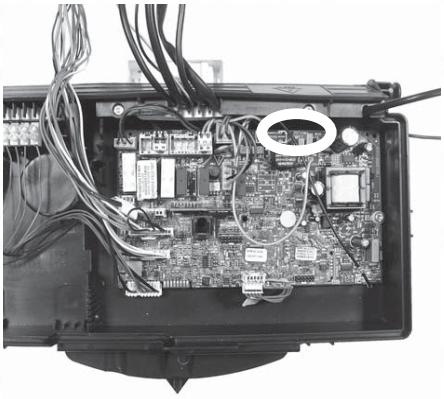 Remove the fuse	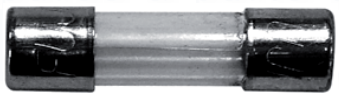

Main P.C.B.

Tools 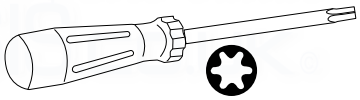			**Time** 7 min
1	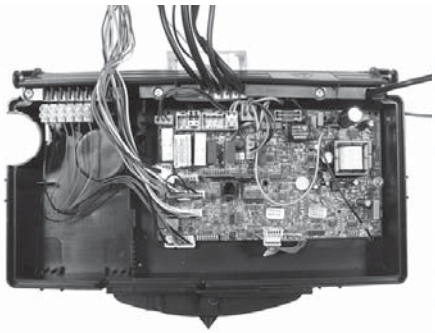	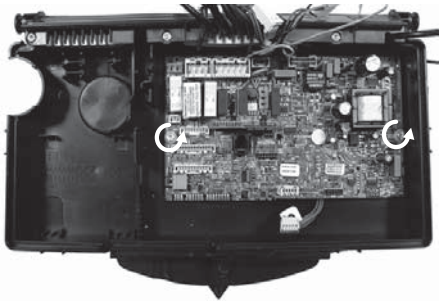	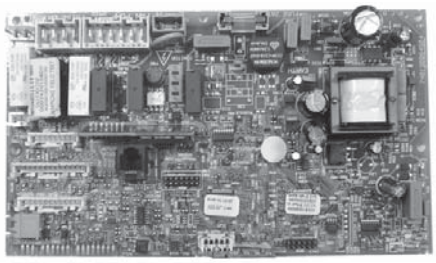
	After opening the control boz, disconnect the electrical plug connectors	Unscrew the two screwa and remove the PCB	

Display P.C.B.

Tools 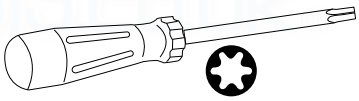			**Time** 7 min
1	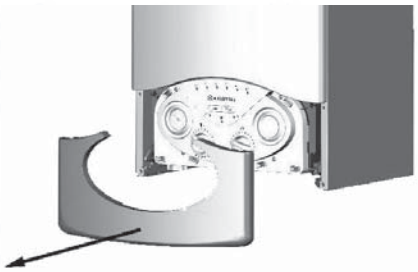		
	Unclip the cover to remove	Remove the two control knobs	Unscrew the four screws and pull the assembly towards you
2	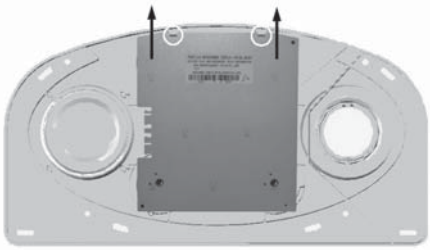	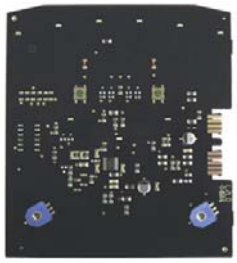	
	Disconnect the electrical plug connectors, unlock the two clamps, and remove the PCB		

Hydraulic Unit

Right hand hydraulic block assembly

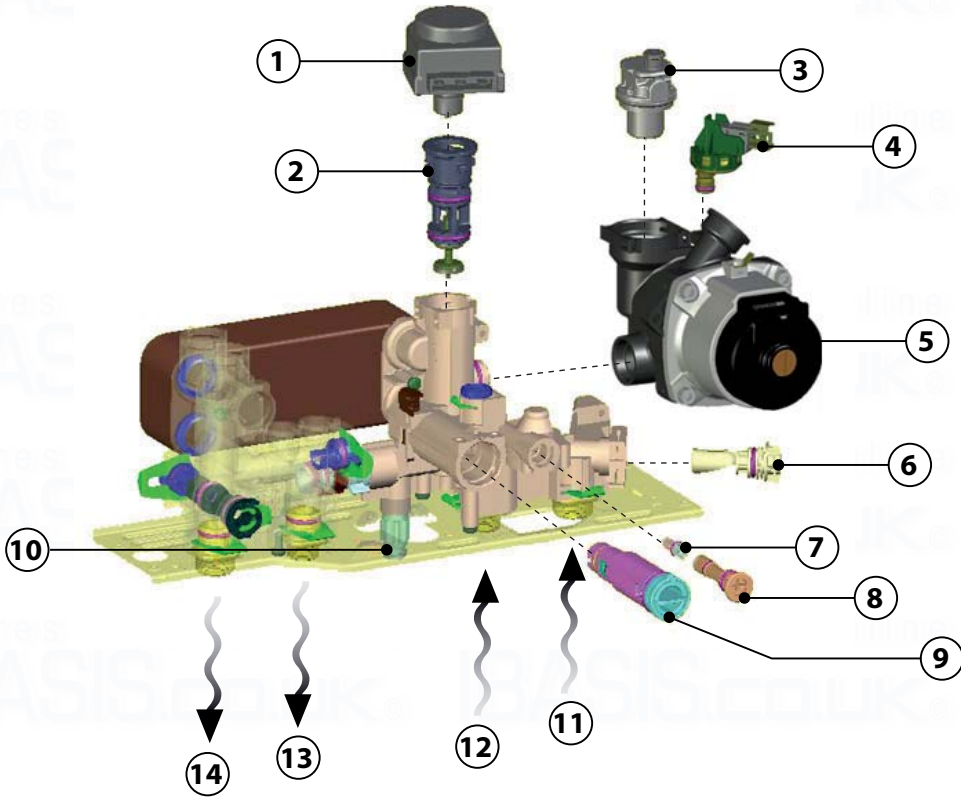

Legend:

1. Diverter valve motor
2. Diverter valve
3. Auto air vent
4. Primary water pressure switch
5. Pump
6. Central heating filter
7. Non return valve
8. Non return valve assembly
9. DHW flow switch assembly
10. Drain valve
11. Central heating return
12. Domestic cold water intlet
13. Domestic hot water outlet
14. Central heating flow

3 Way valve unit

Tools 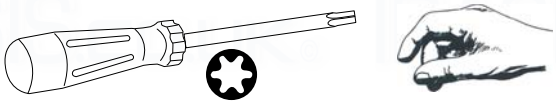		**Time** 5 min
1	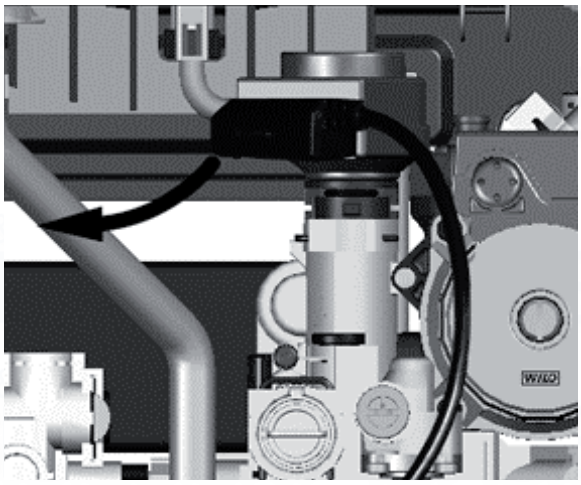	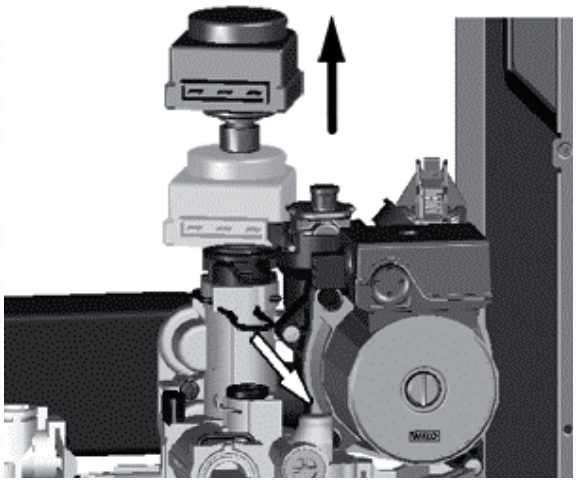
	Unplug the diverter valve cable	Remove the clip and lift the motor from the diverter valve body
2	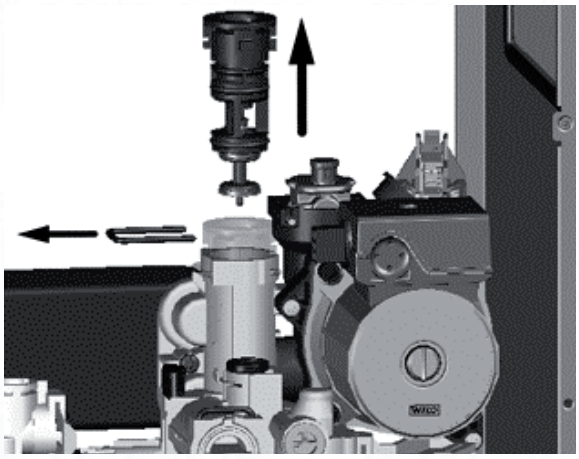	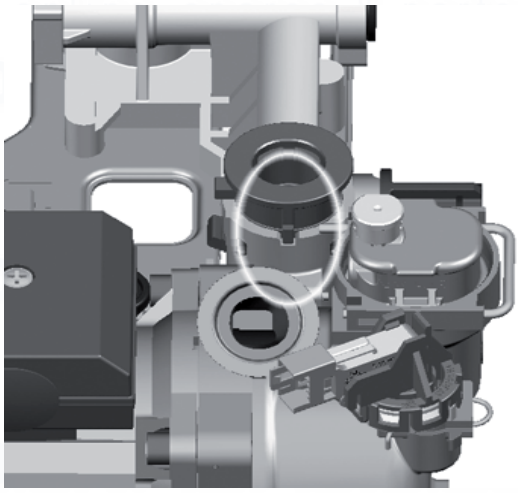
	Drain the boiler (see 3.3). Remove the clip and lift the diverter valve from the assembly	aligned correctly

Draining

Tools		**Time** 5 min
1	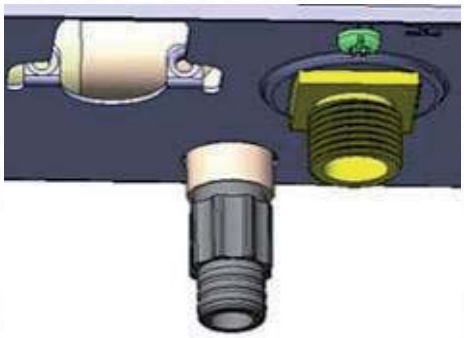	Turn the drain valve anti-clockwise to open and drain the water from the boiler.

Automatic air vent

Tools	Time 5 min
1 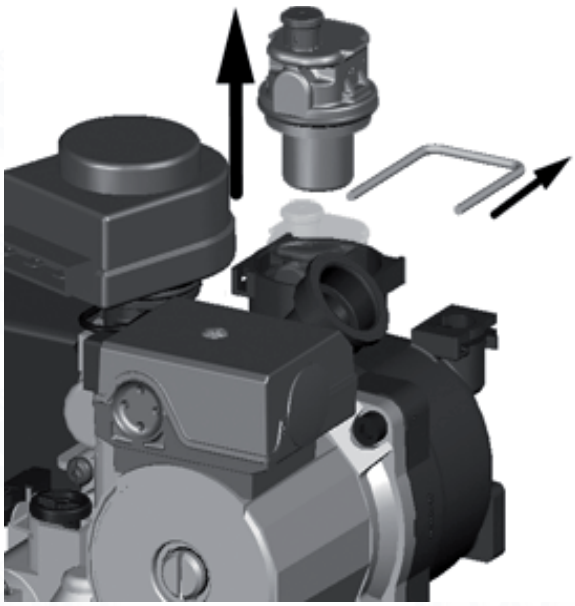	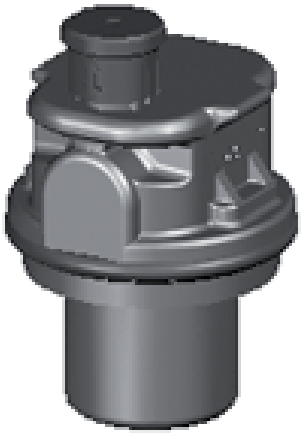
Drain boiler (see 3.3). Remove the clip and lift the AAV from the assembly	

Primary water pressure sensor

Tools	Time 5 min
1 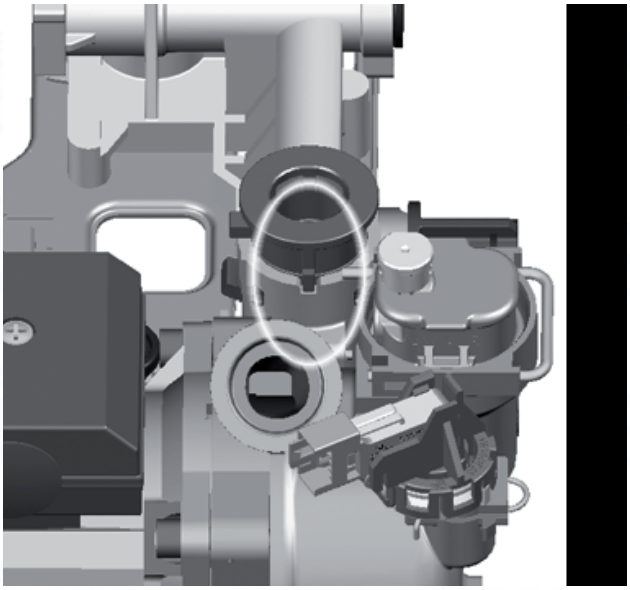	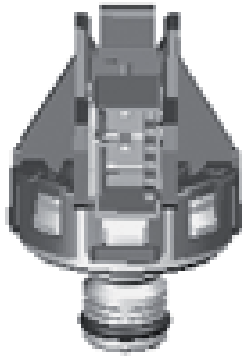
Drain boiler (see 3.3). Remove the fixing clip, unplug the electrical connector and lift the sensor from the assembly	

Pump

Tools		**Time** 10 min
1	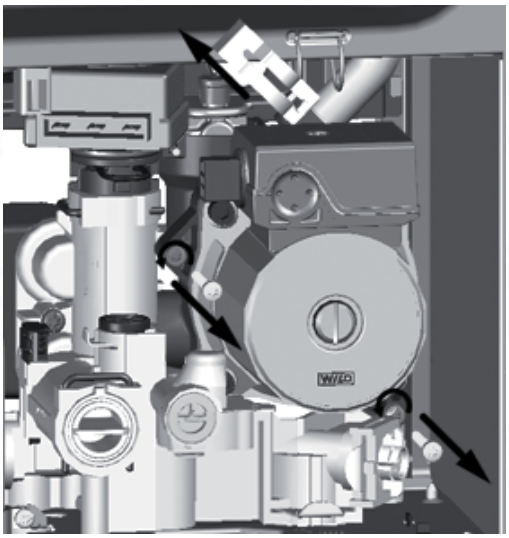	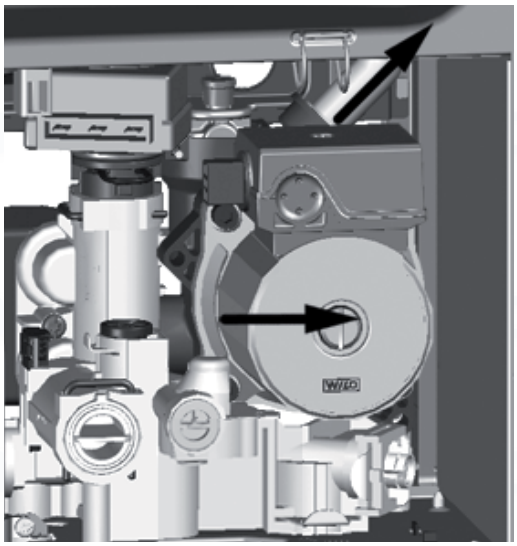
	Drain boiler (see 3.3). Remove the clip and the two screws	Disconnect the pipe and then move the pump to the right disengage
2	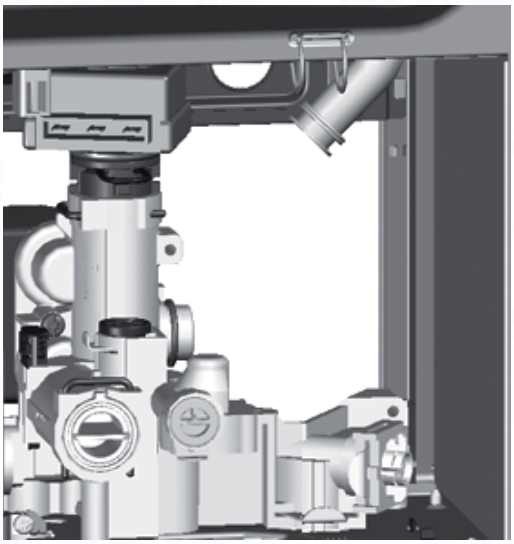	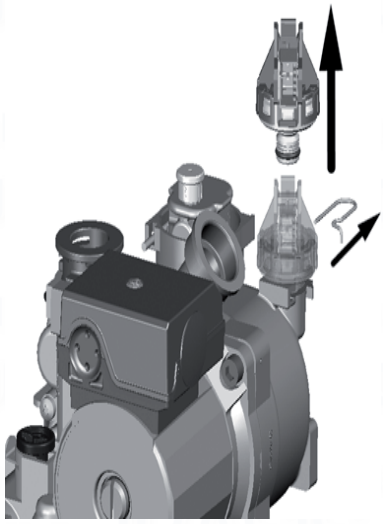
	Remove the pump	Remove the sensor (see 3.5)
3	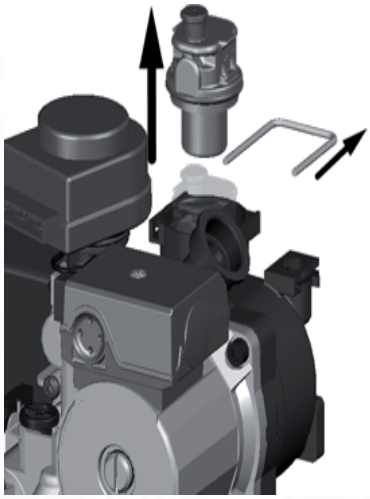	
	Remove the AAV (see 3.4)	

C.H. Filter

Tools 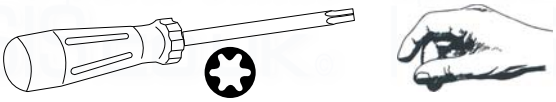			**Time** 5 min
1	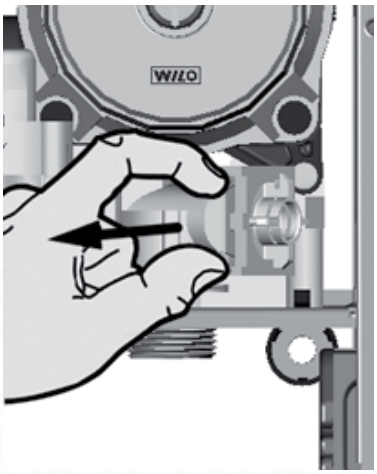	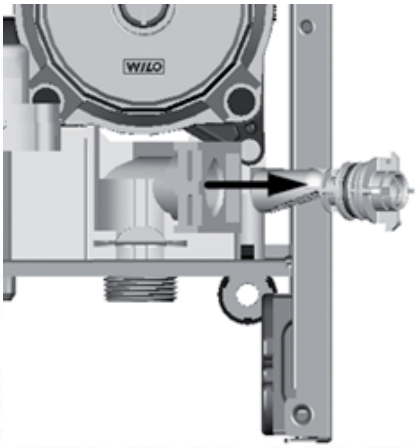	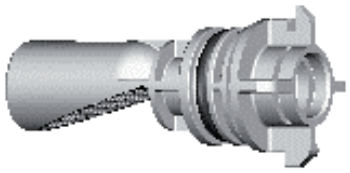
	After opening the control boz, disconnect the electrical plug connectors	Unscrew the two screwa and remove the PCB	

D.H.W. Flow Switch assembly (E-COMBI)

Tools		**Time** 5 min
1	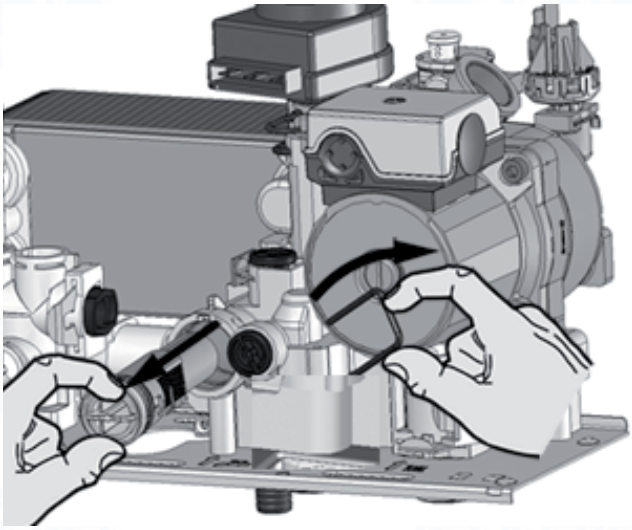	
		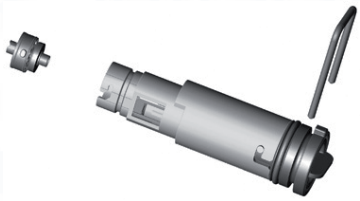
		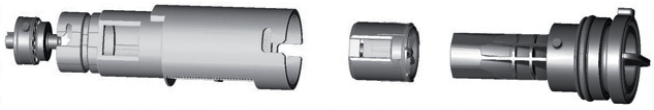
	Drain boiler (see 3.3). Remove the clip and pull the flow switch assembly towards you	Twist the flow switch assembly to disengage

Left hand Hydraulic block assembly

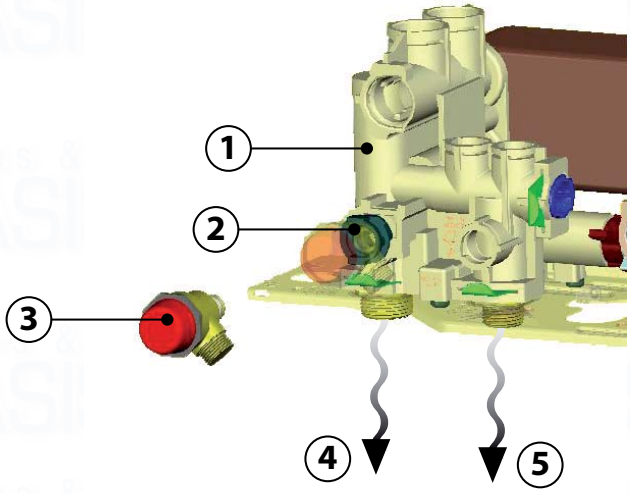

Legend
1. Left hand hydraulic block
2. By-pass assembly
3. Safety valve
4. Central heating flow
5. Domestic hot water outlet

Secondary Heat Exchanger (E-COMBI)

Tools		Time	10 min
1	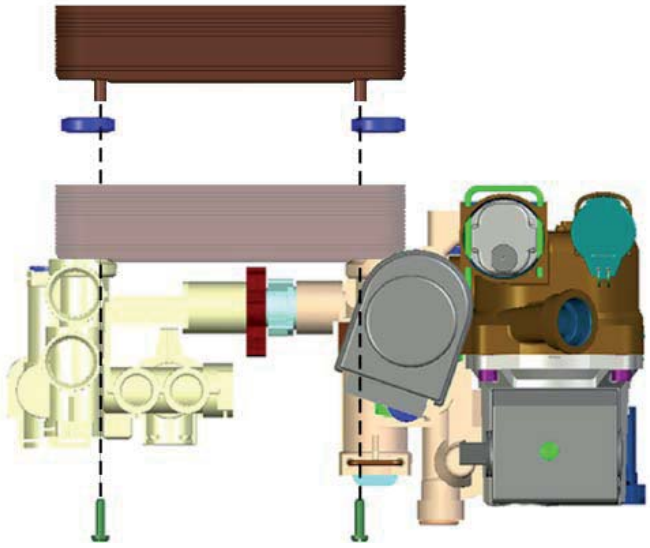	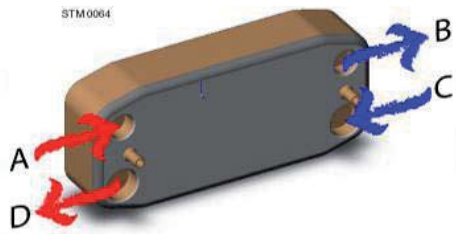	
	Drain primary and domestic hot water circuits. Remove the two screws and remove the heat exchanger		

Condensate Trap

Tools		Time 5 min
1	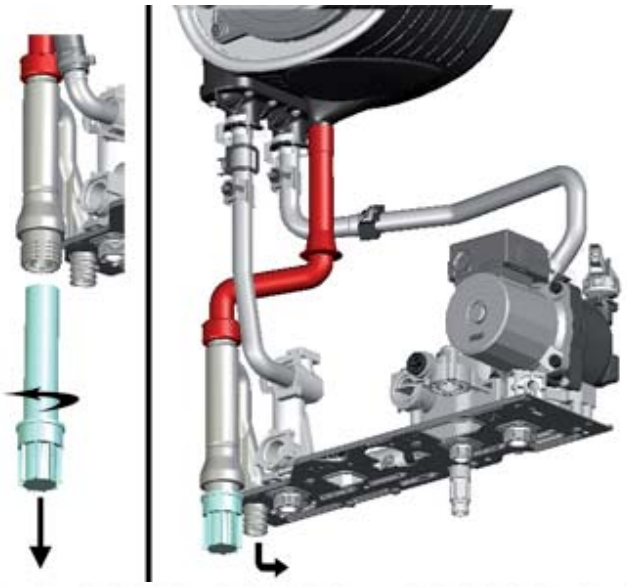	Unscrew the condense trap from the condense body

Safety valve

Tools			Time 5 min
1	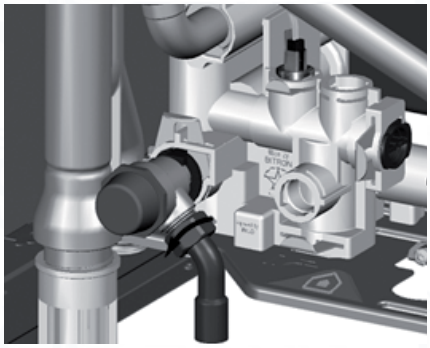	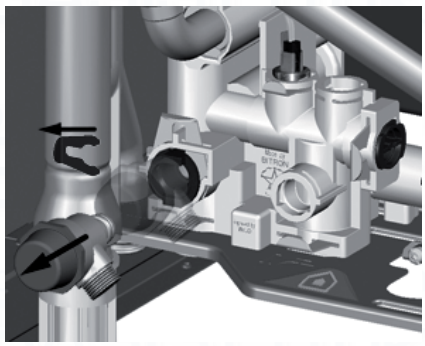	
	Drain boiler (see 3.3). Disconnect the discharge pipe	Remove the first clip on the left and pull the safety valve towards you	

By-Pass Assembly

Tools			Time	5 min
1	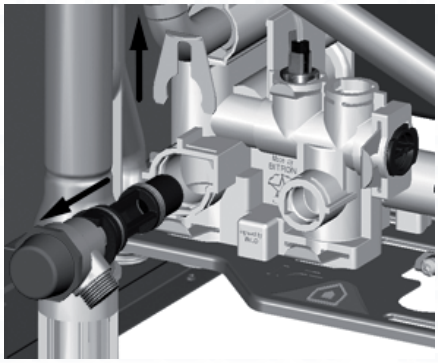	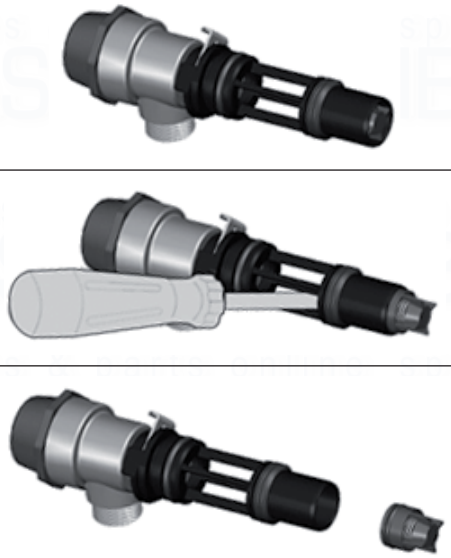		
	Drain boiler (see 3.3). Remove the second clip and pull the assembly toward you	Push on the by-pass to disengage it		

Temperature Sensor

Tools			Time	5 min
1	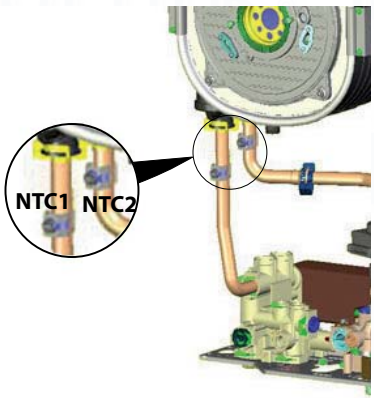	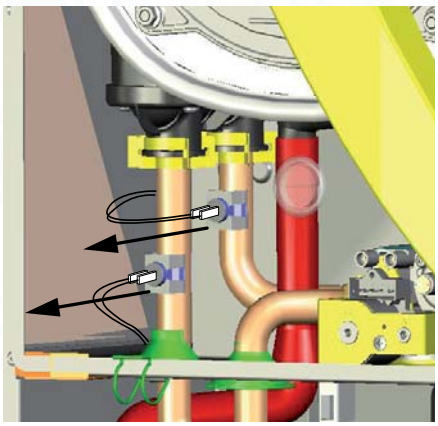	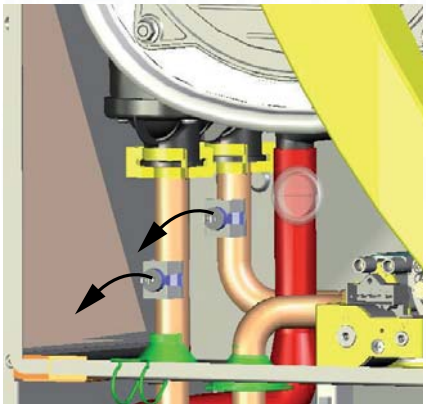	
	NTC1 : Black wires NTC2 : Grey wires	Unplug the electrical connectors	Remove the clip and the temperature sensor	

TEMPERATURE (°C)	RESISTANCE (kOmh)
0	27
10	17
20	12
25	10
30	8
40	5
50	4
60	3
70	2
80	1,5

Manual Air vent

Tools	Time 5 min
1	
Remove the clip and lift the manual air vent from the exchanger	

Main Heat Exchanger

Tools			Time 20 min
1	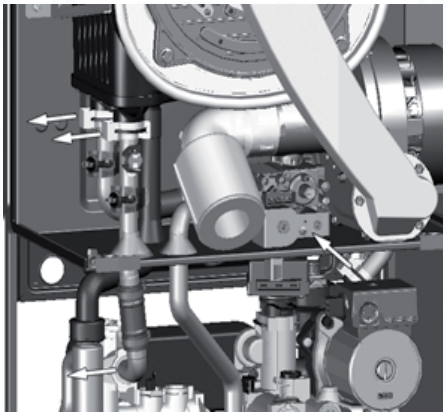	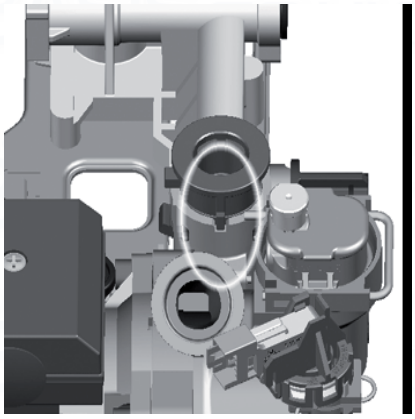	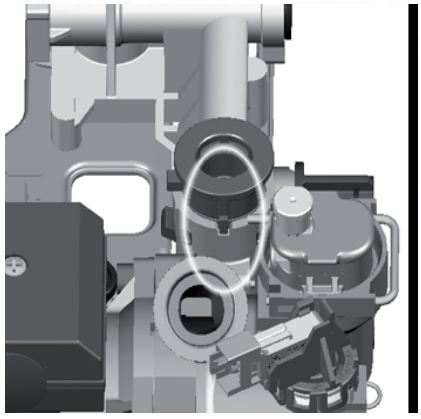
	Drain boiler (see 3.3). Remove the four clips and disconnect the two pipes between the exchanger and pump and between the exchanger and left hand hydraulic block	Isolate the gas supply. Remove the four screws and disconnect the gas pipe from the gas valve	Remove the four screws to free the heat exchanger
2			
	Pull the heat exchanger towards you	Remove the clip and lift the manual air vent	Twist the thermal fuse to remove

Burner unit

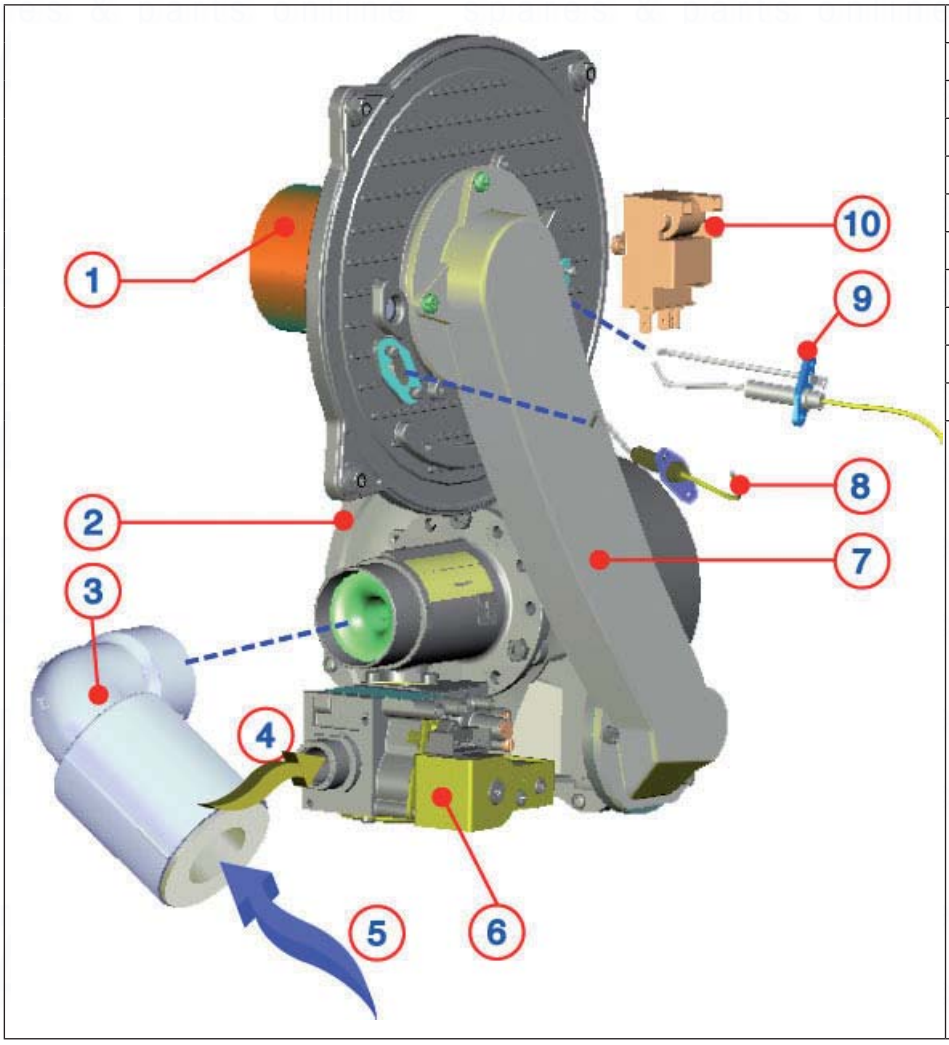

Legend
1. Burner
2. Fan
3. Silencer
4. Gas inlet
5. Air inlet
6. Gas valve
7. Mixing tube
8. Detection electrode
9. Ignition electrode
10. Spark generator

Spark generator

Tools 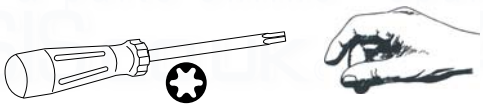			Time 5 min
1	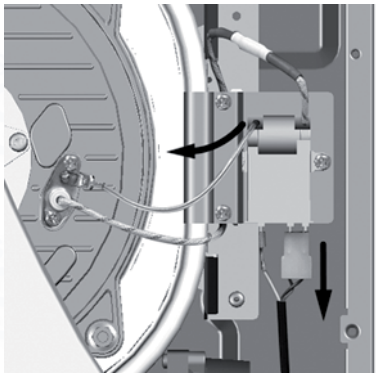	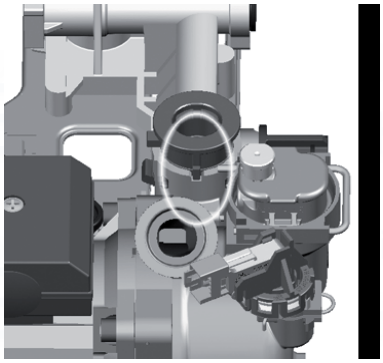	
	Unplug the ignition electrode from the spark generator	Remove the screw and the spark generator	

Electrodes

Tools 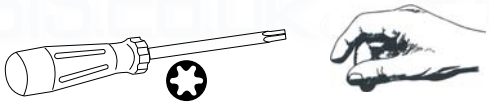			Time 5 min
1	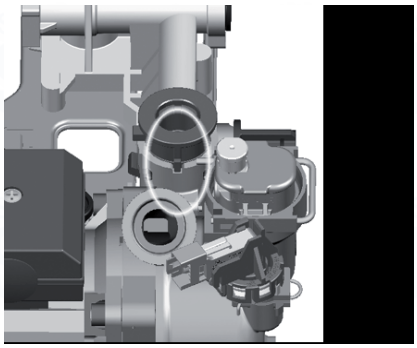	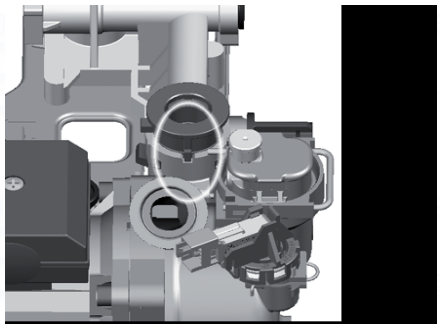	
	Unplug the electrodes	Remove the screws and pull the electrodes towards you.	

Burner

Tools			**Time** 15 min
1	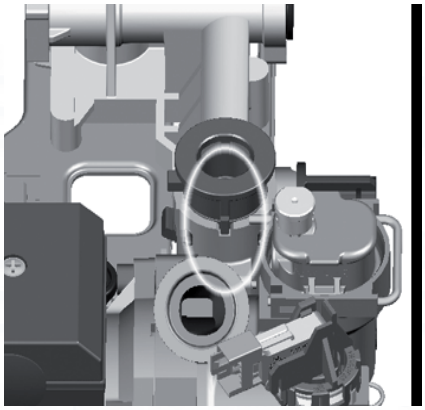	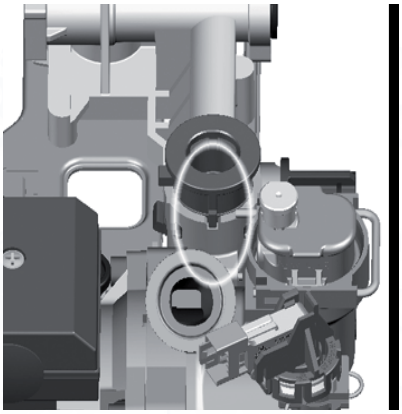	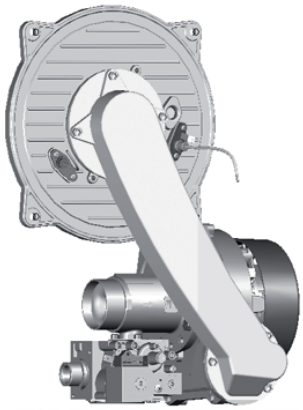
	Remove the silencer	Isolate the gas supply. Remove the four screws and disconnect the gas pipe from the gas valve	Pull the assembly towards you
2	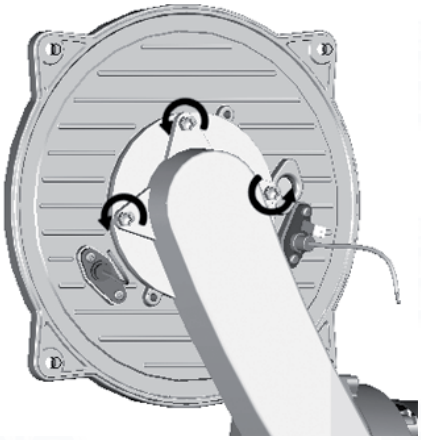	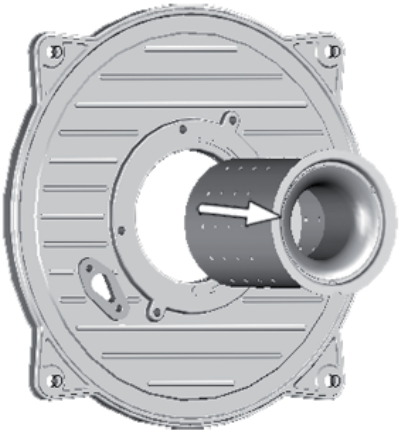	**Note**: Any work carried out on the combustion assembly requires a combustion analysis check on completion of work
	Remove the three screws to free the burner door	Pull the burner toward you	

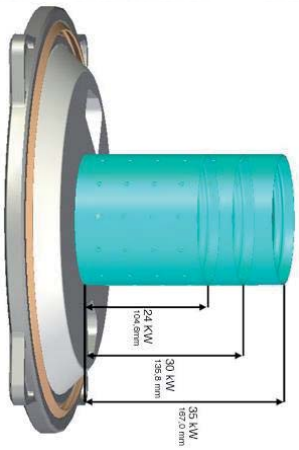

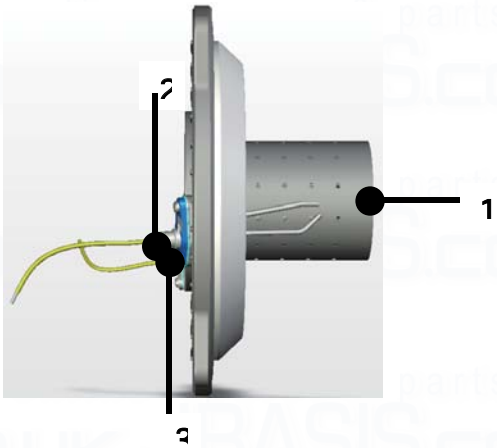

	Power	Length	Venturi
1.Stainless Steel Burner	24 KW	104.6 mm	Ø 42 mm
2. Ignition electrode	30 KW	135.8 mm	/
3.Detection electrode	38 KW	167 mm	/

Fan

Tools			Time 15 min
1	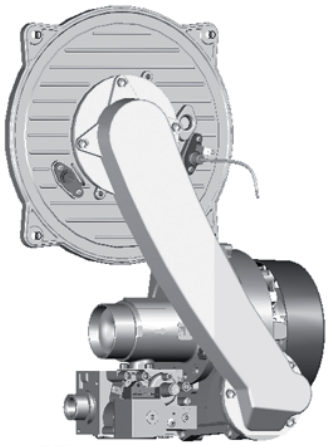	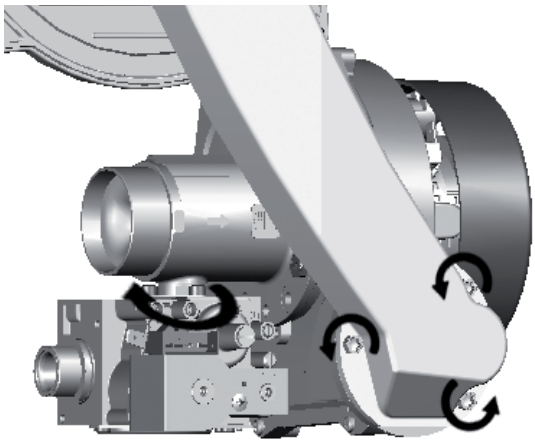	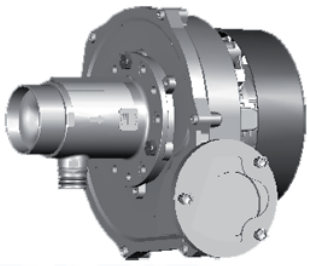
	Remove the combustion assembly (see 4.3)	Remove the three screws to free the fan. Twist the gas valve anti-clockwise to disengage it from the fan	

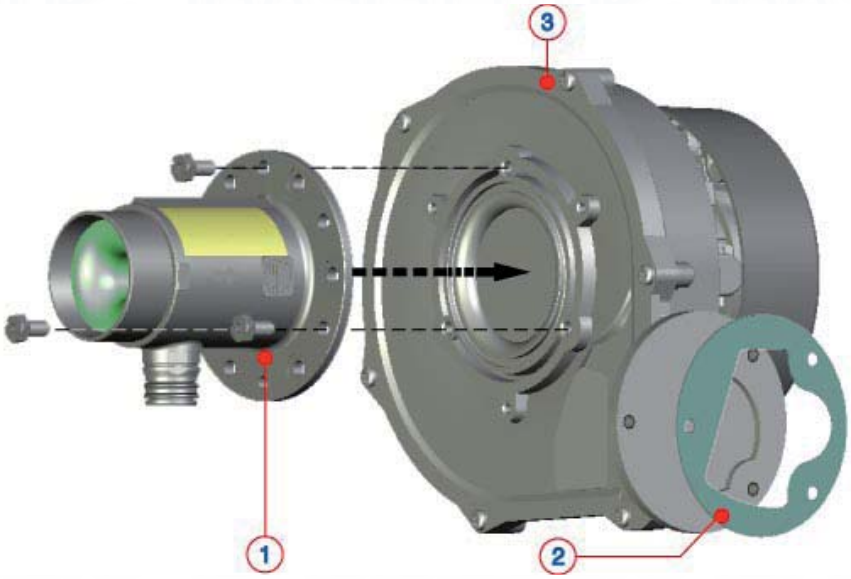

Legend:
1. Venturi
2. Gasket
3. Fan

Fan & Mixer venturi according to the model

Power	Fan	Venturi diameter
Model 24	EBM RG 128 45 W	Ø 17 mm
Model 30	EBM RG 128 45 W	Ø 21 mm
Model 38	EBM RG 128 45 W	Ø 25 mm

Gas valve

Tools			Time 15 min
1	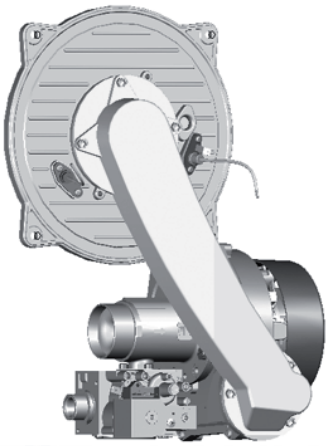	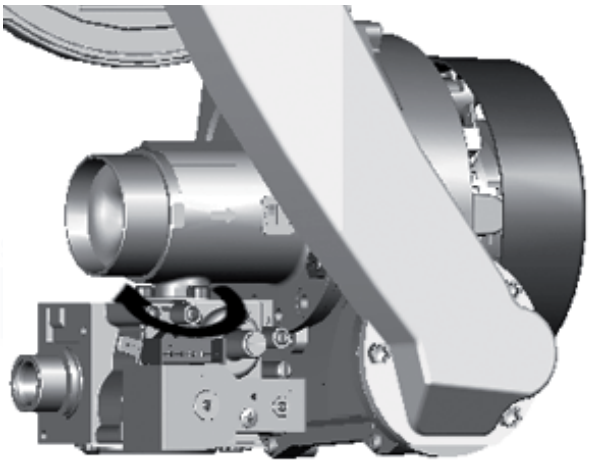	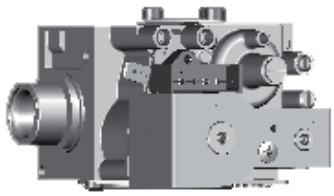
	Remove the combustion assembly (see 4.3)	Twist the gas valve anti-clockwise to disconnect it from the fan	Replacement gas valves are not factory set and will need to be set up (see page 33)

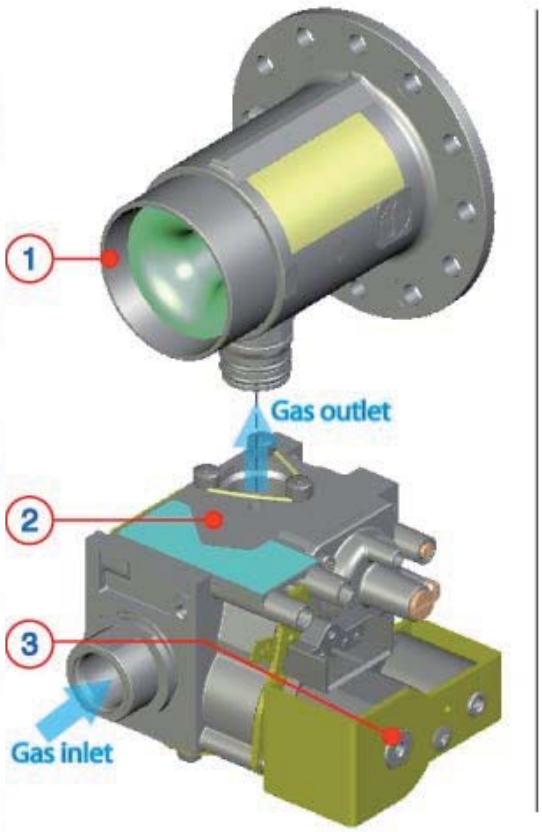

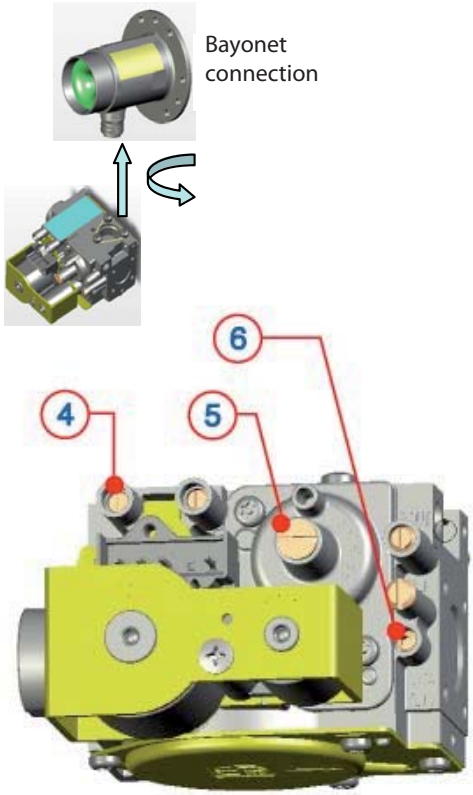

Legend
1. Venturi
2. Gas valve
3. Solenoids
4. Inlet test nipple
5. Offset adjustment
6.Throttle adjustment

Note: When changing the gas valve, the new gas valve is not preset. Ensure the maximum + minimum CO_2 valves are set up in accordance whit the commissioning procedure.

Annual Maintenance

Plate heat exchanger Maintenance Interval: As necessary How: To measure specification of DHW performance.	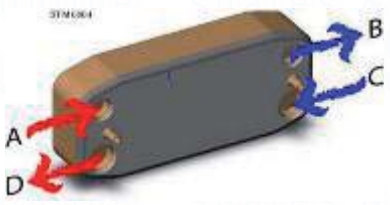
By-pass & Safety valve Maintenance Interval: Annually How: Visual inspection / Clean as necessary	
Central heating filter Maintenance Interval: Annually How: Visual inspection / Clean as necessary	
Flow switch operation Maintenance Interval: Annually How: Visual inspection / Clean as necessary / Check flow rate	
Expansion vessel Maintenance Interval: Annually How: Check air pressure is at 1 bar (System drained)	
Ignition & detection electrodes Maintenance Interval: Annually How: Visual inspection / Clean as necessary / Distance from the burner / Ionisation current more than 1 µA	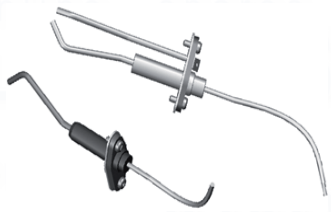
Burner Maintenance Interval: Annually How: Visual inspection / Clean as necessary	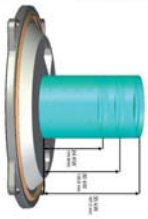
Fan Maintenance Interval: Annually How : Visual inspection / Clean as necessary	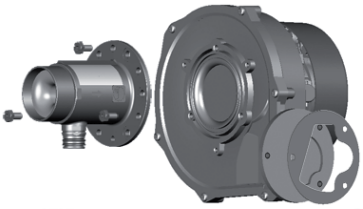

Primary Heat exchanger Maintenance Interval: Annually How : Visual inspection / Clean as necessary	
Condensate trap Maintenance Interval: Annually or after cleaning primary heat exchanger How: Visual inspection / Clean as necessary / Add water before replacing	
Pump Maintenance Interval: At the first ignition and annually How: Check that the AAV is open / Visual inspection / Clean as necessary	

Fault finding

Overheat	
Insufficient circulation	Water pressure
	Bleed heat exchanger
	Pump operation
	CH return filter for blockages
	Circulation around boiler (blockages)
	ntc temperature sensors
Insufficient water (request filling)	Water pressure gauge for correct pressure
	Check for waterleaks on the entire system
CH Flow temp. probe circuit open/ short circuit	Check connections and wiring to temp sensors
CH Flow temp. probe circuit open/ short circuit	Resistance values of temp sensors
Heating delivery probe problem	Details in maintenance guide in installation manual
Floor thermostat contact open	Check terminals TA2 for presence of link wire
EEPROM Error	Check the EEPROM connection onto the pcb
Communication error	Check connection and wiring onto all devices, main and display pcb
Main PCB error	
Too many (>5) resets in 5 minutes	Identify reason for lockout from table and check for relevant faults
No Flame detected	Insufficient working gas pressure
1st Ignition failed	Spark electrode/wiring connectors
2nd Ignition failed	Ignition electrode/wiring connectors
Flame cut-off	Spark generator/wiring connectors
	Check flue system for correct assembly/ termination
	Check earth
	Gas valve
	CO2 settings
	Soft light rate

Flame detected with gas valve closed	Ignition electrode/wiring connectors
	Ignition electrode wiring connection onto main pcb
Flame lift	Insufficient working gas pressure
	Check flue system for correct assembly/ termination
	CO2 settings
Thermofuse open	Check wiring and connections to thermofuse
	Check integriry of main heat exchanger
Fan speed error	Check fan
	Check wiring connections from fan to pcb

GAS BOILER SYSTEM COMMISSIONING CHECKLIST

This Commissioning Checklist is to be completed in full by the competent person who commissioned the boiler as a means of demonstrating compliance with the appropriate Building Regulations and then handed to the customer to keep for future reference.

Failure to install and commission this equipment to the manufacturer's instructions may invalidate the warranty but does not affect statutory rights.

Customer Name ______ Telephone Number ______
Address ______
Boiler Make and Model ______
Boiler Serial Number ______
Commissioned by *(print name)* ______ CORGI ID Number ______
Company Name ______ Telephone Number ______
Company Address ______
______ Commissioning Date ______

To be completed by the customer on receipt of a Building Regulations Compliance Certificate*:
Building Regulations Notification Number *(if applicable)* ______

CONTROLS Tick the appropriate boxes

Time and Temperature Control to Heating	Room Thermostat and Programmer/Timer ☐	Programmable Room Thermostat ☐	Load/Weather Compensation ☐	Optimum Start Control ☐
Time and Temperature Control to Hot Water			Cylinder Thermostat and Programmer/Timer ☐	Combination Boiler ☐
Heating Zone Valves			Fitted ☐	Not Required ☐
Hot Water Zone Valves			Fitted ☐	Not Required ☐
Thermostatic Radiator Valves			Fitted ☐	Not Required ☐
Automatic Bypass to System			Fitted ☐	Not Required ☐
Boiler Interlock				Provided ☐

ALL SYSTEMS

The system has been flushed and cleaned in accordance with BS7593 and boiler manufacturer's instructions Yes ☐
What system cleaner was used? ______
What inhibitor was used? ______ Quantity ______ *litres*

CENTRAL HEATING MODE Measure and Record:

Gas Rate ______ m^3/hr OR ______ *ft^3/hr*
Burner Operating Pressure (if applicable) ______ mbar OR Gas Inlet Pressure ______ mbar
Central Heating Flow Temperature ______ *°C*
Central Heating Return Temperature ______ *°C*

COMBINATION BOILERS ONLY

Is the installation in a hard water area (above 200ppm)? Yes ☐ No ☐
If yes, has a water scale reducer been fitted? Yes ☐ No ☐
What type of scale reducer has been fitted? ______

DOMESTIC HOT WATER MODE Measure and Record:

Gas Rate ______ m^3/hr OR ______ *ft^3/hr*
Burner Operating Pressure (at maximum rate) ______ mbar OR Gas Inlet Pressure (at maximum rate) ______ mbar
Cold Water Inlet Temperature ______ *°C*
Hot water has been checked at all outlets Yes ☐ Temperature ______ *°C*
Water Flow Rate ______ *l/min*

CONDENSING BOILERS ONLY

The condensate drain has been installed in accordance with the manufacturer's instructions and/or BS5546/BS6798 Yes ☐

ALL INSTALLATIONS

If required by the manufacturer, record the following CO_2 ______ % OR CO ______ *ppm* OR CO/CO_2 Ratio ______
The heating and hot water system complies with the appropriate Building Regulations Yes ☐
The boiler and associated products have been installed and commissioned in accordance with the manufacturer's instructions Yes ☐
The operation of the boiler and system controls have been demonstrated to and understood by the customer Yes ☐
The manufacturer's literature, including Benchmark Checklist and Service Record, has been explained and left with the customer Yes ☐

Commissioning Engineer's Signature ______

Customer's Signature ______
(To confirm satisfactory demonstration and receipt of manufacturer's literature)

*All installations in England and Wales must be notified to Local Authority Building Control (LABC) either directly or through a Competent Persons Scheme. A Building Regulations Compliance Certificate will then be issued to the customer.

benchmark COLLECTIVE MARK
THE MARK OF QUALITY FOR THE INSTALLATION, COMMISSIONING AND SERVICING OF DOMESTIC HEATING AND HOT WATER SYSTEMS

©Heating and Hotwater Industry Council (HHIC)

SERVICE RECORD

It is recommended that your heating system is serviced regularly and that the appropriate Service Record is completed.

Service Provider
Before completing the appropriate Service Record below, please ensure you have carried out the service as described in the manufacturer's instructions.

Always use the manufacturer's specified spare part when replacing controls.

SERVICE 1 Date
Energy Efficiency Checklist completed? Yes ☐ No ☐
Engineer Name
Company Name
Telephone Number
CORGI ID Number
Comments
Signature

SERVICE 2 Date
Energy Efficiency Checklist completed? Yes ☐ No ☐
Engineer Name
Company Name
Telephone Number
CORGI ID Number
Comments
Signature

SERVICE 3 Date
Energy Efficiency Checklist completed? Yes ☐ No ☐
Engineer Name
Company Name
Telephone Number
CORGI ID Number
Comments
Signature

SERVICE 4 Date
Energy Efficiency Checklist completed? Yes ☐ No ☐
Engineer Name
Company Name
Telephone Number
CORGI ID Number
Comments
Signature

SERVICE 5 Date
Energy Efficiency Checklist completed? Yes ☐ No ☐
Engineer Name
Company Name
Telephone Number
CORGI ID Number
Comments
Signature

SERVICE 6 Date
Energy Efficiency Checklist completed? Yes ☐ No ☐
Engineer Name
Company Name
Telephone Number
CORGI ID Number
Comments
Signature

SERVICE 7 Date
Energy Efficiency Checklist completed? Yes ☐ No ☐
Engineer Name
Company Name
Telephone Number
CORGI ID Number
Comments
Signature

SERVICE 8 Date
Energy Efficiency Checklist completed? Yes ☐ No ☐
Engineer Name
Company Name
Telephone Number
CORGI ID Number
Comments
Signature

SERVICE 9 Date
Energy Efficiency Checklist completed? Yes ☐ No ☐
Engineer Name
Company Name
Telephone Number
CORGI ID Number
Comments
Signature

SERVICE 10 Date
Energy Efficiency Checklist completed? Yes ☐ No ☐
Engineer Name
Company Name
Telephone Number
CORGI ID Number
Comments
Signature

spares & parts online spares & parts online spares & parts online

SHORT LIST

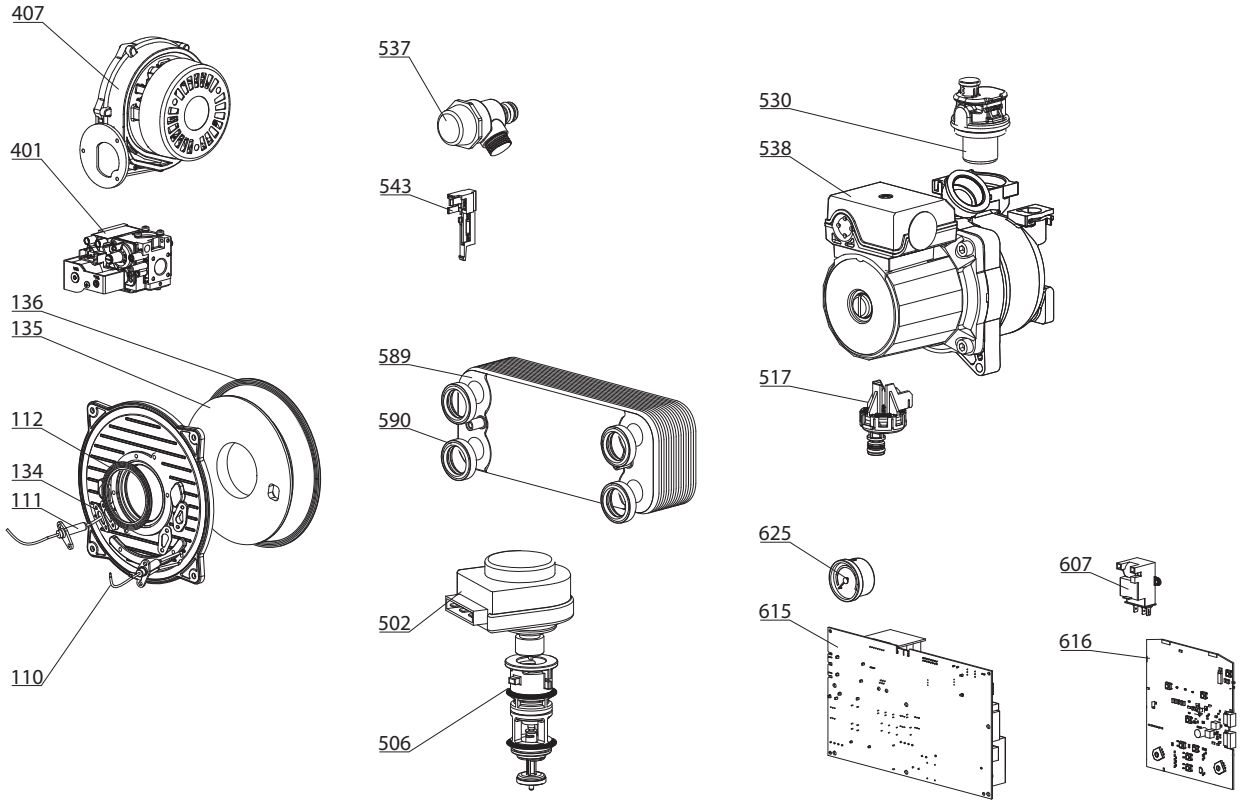

Key N	Description		Manf. Pt. N	Type	E-COMBI 24	E-COMBI 30	E-COMBI 38	E-SYSTEM 24	E-SYSTEM 30			Manf. date from	Manf. date to
0100	**BURNER ASSEMBLY**												
0110	IGNITION ELECTRODE	61317432			●	●	●	●	●				
0111	IONIZATION ELECTRODE	61317433			●	●	●	●	●				
0112	GASKET D:85-66.5-2.5	61314753			●	●	●	●	●				
0134	ELECTRODE GASKET	60000286			●	●	●	●	●				
0135	COMBUSTION CHAMBER LINING KIT	60000297			●	●	●	●	●				
0136	DOOR GASKET	60000623			●	●	●	●	●				
0400	**GAS SECTION**												
0401	GAS VALVE	60000537			●	●	●	●	●				
0407	FAN ASSY	60000622			●	●	●	●	●				
0500	**HYDRAULIC BLOCK**												
0502	MOTOR - THREE-WAY VALVE	61302483			●	●	●						
0506	3-WAY SPRING KIT (D.H.W.)	65104314			●	●	●						
0517	LOW PRESSURE SWITCH	65105090			●	●	●	●	●				
0530	AUTO AIR VENT WITH O-RING	65104703			●	●	●	●	●				
0537	PRESSURE RELIEF VALVE	61312668			●	●	●	●	●				
0538	PUMP 5M 2V	65104319			●	●	●	●	●				
0543	SENSOR (REED)	65104323			●	●	●						
0589	SECONDARY EXCHANGER	65104333			●	●	●						
0590	LIP SEAL	61002249			●	●	●						
0600	**ELECTRICAL BOX**												
0607	IGNITER	61002105-20			●	●	●	●	●				
0615	PRINTED CIRCUIT BOARD	60001129			●	●	●	●	●				
0616	PRINTED CIRCUIT BOARD (DISPLAY)	60001130			●	●	●	●	●				
0625	PRESSURE GAUGE	65104234			●	●	●	●	●				

spares & parts online IBASIS.CO.UK

Ariston Thermo UK Ltd
Hughenden Avenue
High Wycombe
Bucks HP13 5FT
Telephone: (01494) 755600
Fax: (01494) 459775
Internet: www.ariston.co.uk

Technical Advice: 0870 241 8180
Customer Service: 0870 600 9888

Professional Team Limited
Suites 9 & 10, Plaza 256
Blanchardstown Corporate Park 2
Ballycoolin
Dublin 15
Telephone: (01) 810 3723
Fax: (01) 810 3727
Internet: www.aristonthermo.ie

Technical Advice: (01) 437 0121
Customer Service: (01) 437 0121

420010275800