G.C.N.: **47-116-73** (24 kW)
G.C.N.: **47-116-74** (30 kW)
G.C.N.: **47-116-75** (38 kW)
G.C.N.: **41-116-41** (18 kW)
G.C.N.: **41-116-42** (24 kW)
G.C.N.: **41-116-43** (30 kW)

ARISTON

CLAS HE EVO
CLAS HE EVO SYSTEM

INSTALLATION AND SERVICING INSTRUCTIONS

CONDENSING WALL-HUNG GAS BOILER

Country of Destination: GB/IE

kiwa approved product

UK WATER SUPPLY REGULATIONS

benchmark COLLECTIVE MARK
THE MARK OF QUALITY FOR THE INSTALLATION, COMMISSIONING AND SERVICING OF DOMESTIC HEATING AND HOT WATER SYSTEMS

HOT WATER I HEATING I RENEWABLE I AIR CONDITIONING

ErP

INDEX

Overview 3
General Information 4
Advice for the Installer 4
CE Labelling 4
Data Plate Symbols 4
Safety Regulations 5

Product description 7
Control Panel 7
Overall View 8
Overall Dimension 9
Minimum Clearances 9

Installation 10
Reference Standards 10
Installing the Boiler 13
Gas Connection 14
Water Connection 14
Instructions for Opening the Casing and Performing an Internal Inspection 14
Underfloor heating 15
Water circuit diagram 16
Connecting the Flue 17
Fitting the Coaxial Flue (Ø 60/100 Horizontal) 18
Fitting the 5" Flue (Ø 80/125 Horizontal / Vertical) 19
Fitting the Coaxial Flue (Ø 60/100 Vertical) 20
Fitting the Twin Pipe (Ø 80/80) 21
Electrical Connections 24
Peripheral Unit Connection 24
Room Thermostat Connection 25
Outdoor Sensor Connection 25
Cylinder connection 25
Internal mechanical time clock
Internal RF receiver for Ariston programmable room thermostat 26
Electrical Diagram 27

Commissioning 31
Initial Preparation 31
Electricity Supply 31
Filling the Heating System 31
Filling of the DHW System 31
Gas Supply 31
Water Treatment 31
First Igniton Operation 32
Ignition procedure 33
Test Function and Combustion Analysis 34
AUTO Function 36

Boiler Protection Devices 37
Boiler Protection Devices 37
Table summarising error codes 37
Anti-Frost Device 38

Settings - Adjustment - Problem Identification Menus
Accessing the Menus 39

Maintenance
General Comments 46
Operational Test 46
Draining procedures 46
Cleaning the primary exchanger 46
Cleaning the trap 46

Maintenance Guide
General Access 47
Electrical Unit 48
Hydraulic Unit 51
Main Heat Exchanger 59
Burner Unit 60
Fan Unit 63
Gas Valve 64
Annual Maintenance 65

Technical Information
Technical Data CLAS HE EVO 67
Technical Data CLAS HE SYSTEM EVO 68
ERP Data CLAS HE EVO 69
Product fiche CLAS HE EVO 69
ERP Data CLAS HE SYSTEM EVO 70
Product fiche CLAS HE SYSTEM EVO 70
Package Label - Instuctions to filling 71
Package fiche 72

Benchmark Commissioning Checklist 75
Benchmark Service Interval Record 76

These instructions are suitable for CLAS HE boilers :
Do not forget the Log Book!

The Benchmark Scheme
Benchmark places responsibilities on both manufacturers and installers. The purpose is to ensure that customers are provided with the correct equipment for their needs, that it is installed, commissioned and serviced in accordance with the manufacturer's instructions by competent persons and that it meets the requirements of the appropriate Building Regulations. The Benchmark Checklist can be used to demonstrate compliance with Building Regulations and should be provided to the customer for future reference.

Installers are required to carry out installation, commissioning and servicing work in accordance with the Benchmark Code of Practice which is available from the Heating and Hotwater Industry Council who manage and promote the Scheme. Visit www.centralheating.co.uk for more information.

To The Installer
As part of the commissioning of this appliance it is vital that the Log Book is completed and given to the Householder. Please ensure that your customer is aware of the importance of keeping the Log Book safe as a record of the installation and the appliance service history.

Please ensure that your customer is aware of the correct operation of the system, boiler and controls.

ARISTON recommend the use of protective clothing, when installing and working on the appliance i.e. gloves.

CUSTOMER CARE
ARISTON, as a leading manufacturer of domestic and commercial water heating appliances is committed to providing high quality products and a high quality after sales service.
Advice on installation or servicing can also be obtained by contacting the ARISTON Technical and Customer Service Departments at High Wycombe.

TECHNICAL DEPARTMENT
Tel: 0333 240 7777
Fax: 01494 459775

CUSTOMER SERVICE DEPARTMENT
Tel: 0333 240 8777
Fax: 01494 459775

GUARANTEE
The manufacturer's guarantee is for 5 years from the date of purchase. The guarantee is invalidated if the appliance is not installed in accordance with the recommendations made herein or in a manner not approved by the manufacturer. To assist us in providing you with an efficient after sales service, please register the guarantee online at **www.ariston.co.uk**

CAUTION
In the United Kingdom, installation, start-up, adjustments and maintenance, must be performed by a competent person only, in accordance with the current Gas Safety (Installation & Use) Regulations and the instructions provided.

In the Republic of Ireland, the installation and initial start up of the appliance must be carried out by a Competent Person in accordance with the current edition of I.S.813 "Domestic Gas Installations", the current Buidling Regulations, reference should also be made to the current ETCI rules for electrical installation.

All GAS SAFE registered installers carry a GAS SAFE ID card, and have a registration number. Both should be recorded in your boiler Log Book. You can check your installer is GAS SAFE registered by calling GAS SAFE directly on:- 0800 408 5500.

Improper installation may cause damage or injury to individuals, animals and personal property for which the manufacturer will not be held liable. To ensure efficient and safe operation it is recommended that the boiler is serviced annually by a competent person.

If it is known that a fault exists on the appliance, it must not be used until the fault has been corrected by a competent person.

This instruction booklet is especially designed for appliances installed in the UK and the Republic of Ireland

ATTENTION!!
THE INSTALLATION AND FIRST IGNITION OF THE BOILER MUST BE PERFORMED BY QUALIFIED PERSONNEL IN COMPLIANCE WITH CURRENT NATIONAL REGULATIONS REGARDING INSTALLATION, AND IN CONFORMITY WITH ANY REQUIREMENTS ESTABLISHED BY LOCAL AUTHORITIES AND PUBLIC HEALTH ORGANISATIONS.
AFTER THE BOILER HAS BEEN INSTALLED, THE INSTALLER MUST ENSURE THAT THE END USER RECEIVES THE DECLARATION OF CONFORMITY AND THE OPERATING MANUAL, AND SHOULD PROVIDE ALL NECESSARY INFORMATION AS TO HOW THE BOILER AND THE SAFETY DEVICES SHOULD BE HANDLED.

Advice for the installer
This appliance is designed to produce hot water for domestic use.
It should be connected to a heating system and a distribution network for domestic hot water, both of which must be compatible with its performance and power levels.
The use of the appliance for purposes other than those specified is strictly forbidden. The manufacturer cannot be held responsible for any damage caused by improper, incorrect and unreasonable use of the appliance or by the failure to comply with the instructions given in this manual.
Installation, maintenance and all other interventions must be carried out in full conformity with the governing legal regulations and the instructions provided by the manufacturer. Incorrect installation can harm persons, animals and possessions; the manufacturing company shall not be held responsible for any damage caused as a result. The boiler is delivered in a carton. Once you have removed all the packaging, make sure the appliance is intact and that no parts are missing. If this is not the case, please contact your supplier.
Keep all packaging material (clips, plastic bags, polystyrene foam, etc.) out of reach of children as it may present a potential hazard.
In the event of a fault and/or malfunction, turn the appliance off, turn off the gas cock and do not attempt to repair it yourself. Contact a qualified professional instead.
Before any maintenance or repair work is performed on the boiler, make sure you have disconnected it from the electricity supply by switching the external bipolar switch to the "OFF" position and removing the fuse.
All repairs, which should only be performed using original spare parts, should be carried out by a qualified professional. Failure to comply with the above instructions could compromise the safety of the appliance and invalidate all liability on the part of the manufacturer.
In the event of any maintenance or other structural work in the immediate vicinity of the ducts or flue gas exhaust devices and their accessories, switch the appliance off by switching the external bipolar switch to the "OFF" position and shutting off the gas control valve. When the work has been completed, ask a qualified technician to check the efficiency of the ducting and the devices.
Turn the boiler off and turn the external switch "OFF" to clean the exterior parts of the appliance.
Clean using a cloth dampened with soapy water. Do not use aggressive detergents, insecticides or toxic products. If the appliance is used in full compliance with current legislation, it will operate in a safe, environmentally-friendly and cost-efficient manner.
If using kits or optional extras, make sure they are authentic.

CE labelling
The CE mark guarantees that the appliance conforms to the following directives:
- **2009/142/CEE**
  relating to gas appliances
- **2004/108/CEE**
  relating to electromagnetic compatibility
- **92/42/CEE**
  relating to energy efficiency
- **2006/95/CEE**
  relating to electrical safety
- **2009/125/CE**
  Energy related Products
- **813/2013**
  Commission regulation (EU)

Symbols used on the data plate

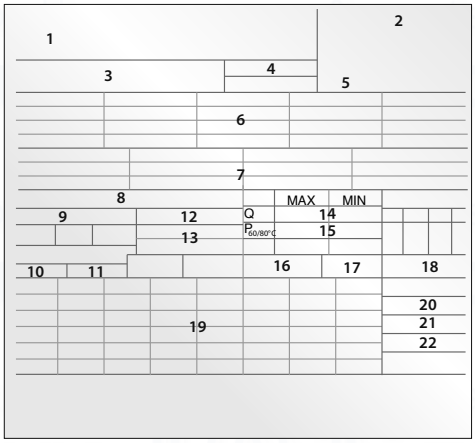

Legend :
1. Brand
2. Manufacturer
3. Boiler model - Serial number
4. Commercial reference
5. certification number
6. Destination country - gas category
7. Gas setting
8. Installation type
9. Electrical data
10. Maximum domestic hot water pressure
11. Maximum heating pressure
12. Boiler type
13. NOx class / Efficiency
14. Input rating nominal heating
15. Power ouput heating
16. DHW specific flow rate
17. Boiler output efficiency
18. Input rating nominal DHW
19. Gases which may be used
20. Minimum ambient temperature for use
21. Max. central heating temperature
22. Max. domestic hot water temperature

SAFETY REGULATION

Key to symbols:

⚠ Failure to comply with this warning implies the risk of personal injury, in some circumstances even fatal

△ Failure to comply with this warning implies the risk of damage, in some circumstances even serious, to property, plants or animals.

Install the appliance on a solid wall which is not subject to vibration.

Noisy operation. △

When drilling holes in the wall for installation purposes, take care not to damage any electrical wiring or existing piping.

Electrocution caused by contact with live wires. Explosions, fires or asphyxiation caused by gas leaking from damaged piping. ⚠

Damage to existing installations. △

Flooding caused by water leaking from damaged piping.

Perform all electrical connections using wires which have a suitable section.

Fire caused by overheating due to electrical current passing through undersized cables. ⚠

Protect all connection pipes and wires in order to prevent them from being damaged.

Electrocution caused by contact with live wires. Explosions, fires or asphyxiation caused by gas leaking from damaged piping. ⚠

Flooding caused by water leaking from damaged piping. △

Make sure the installation site and any systems to which the appliance must be connected comply with the applicable norms in force.

Electrocution caused by contact with live wires which have been installed incorrectly. ⚠

Damage to the appliance caused by improper operating conditions. △

Use suitable manual tools and equipment (make sure in particular that the tool is not worn out and that its handle is fixed properly); use them correctly and make sure they do not fall from a height. Replace them once you have finished using them.

Personal injury from the falling splinters or fragments, inhalation of dust, shocks, cuts, pricks and abrasions. ⚠

Damage to the appliance or surrounding objects caused by falling splinters, knocks and incisions. △

Use electrical equipment suitable for its intended use (in particular, make sure that the power supply cable and plug are intact and that the parts featuring rotary or reciprocating motions are fastened correctly); use this equipment correctly; do not obstruct passageways with the power supply cable, make sure no equipment could fall from a height. Disconnect it and replace it safely after use.

Personal injury caused by falling splinters or fragments, inhalation of dust, knocks, cuts, puncture wounds, abrasions, noise and vibration. ⚠

Damage to the appliance or surrounding objects caused by falling splinters, knocks and incisions. △

Make sure any portable ladders are positioned securely, that they are suitably strong and that the steps are intact and not slippery and do not wobble when someone climbs them. Ensure someone provides supervision at all times.

Personal injury caused by falling from a height or cuts (stepladders shutting accidentally). ⚠

Make sure any rolling ladders are positioned securely, that they are suitably strong, that the steps are intact and not slippery and that the ladders are fitted with handrails on either side of the ladder and parapets on the landing.

Personal injury caused by falling from a height. ⚠

During all work carried out at a certain height (generally with a difference in height of more than two metres), make sure that parapets are used to surround the work area or that individual harnesses are used to prevent falls. The space where any accidental fall may occur should be free from dangerous obstacles, and any impact upon falling should be cushioned by semi-rigid or deformable surfaces.

Personal injury caused by falling from a height. ⚠

Make sure the workplace has suitable hygiene and sanitary conditions in terms of lighting, ventilation and solidity of the structures.

Personal injury caused by knocks, stumbling etc. ⚠

Protect the appliance and all areas in the vicinity of the work place using suitable material.

Damage to the appliance or surrounding objects caused by falling splinters, knocks and incisions. △

Handle the appliance with suitable protection and with care.

Damage to the appliance or surrounding objects from shocks, knocks, incisions and squashing. △

During all work procedures, wear individual protective clothing and equipment.

Personal injury caused by electrocution, falling splinters or fragments, inhalation of dust, shocks, cuts, puncture wounds, abrasions, noise and vibration.

Place all debris and equipment in such a way as to make movement easy and safe, avoiding the formation of any piles which could yield or collapse.

Damage to the appliance or surrounding objects from shocks, knocks, incisions and squashing.

All operations inside the appliance must be performed with the necessary caution in order to avoid abrupt contact with sharp parts.

Personal injury caused by cuts, puncture wounds and abrasions.

Reset all the safety and control functions affected by any work performed on the appliance and make sure they operate correctly before restarting the appliance.

Explosions, fires or asphyxiation caused by gas leaks or an incorrect flue gas exhaust.

Damage or shutdown of the appliance caused by out-of-control operation.

Before handling, empty all components that may contain hot water, carrying out any bleeding if necessary.

Personal injury caused by burns.

Descale the components, in accordance with the instructions provided on the safety data sheet of the product used, airing the room, wearing protective clothing, avoid mixing different products, and protect the appliance and surrounding objects.

Personal injury caused by acidic substances coming into contact with skin or eyes; inhaling or swallowing harmful chemical agents.

Damage to the appliance or surrounding objects due to corrosion caused by acidic substances.

If you detect a smell of burning or smoke, keep clear of the appliance, disconnect it from the electricity supply, open all windows and contact the technician.

Personal injury caused by burns, smoke inhalation, asphyxiation.

This appliance can be used by children aged from 8 years and above and person with reduced physical, sensory or mental capabilities or lack of experience and knowledge if they have been given supervision or instruction concerning use of the appliance in a safe way and understand the hazards involved. Children shall not play with the appliance. Cleaning and user maintenance shall not be made by children without supervision.

Control panel

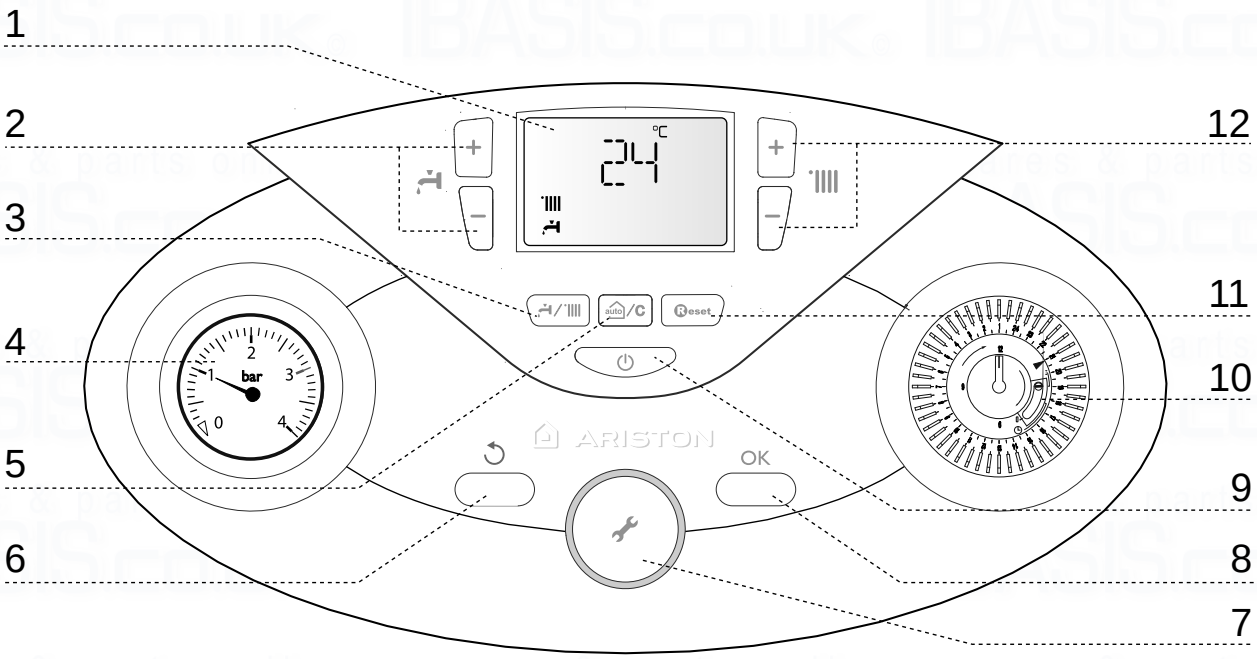

Legend :

1. Display
2. Domestic Hot Water temperature adjustment button +/- **(only for Clas HE EVO models)**
3. Mode button (Operation mode selection (summer/winter)
4. Pressure gauge
5. Auto Function and/or Comfort Function enable/disable button **(Comfort function only for Clas HE EVO models)**
6. Esc button - *reserved for technical assistance*
7. "encoder" programming knob - *reserved for technical assistance*
8. Ok button - *reserved for technical assistance*
9. ON/OFF button
10. TIME CLOCK (CLAS HE Evo System models optional)
11. RESET button
12. Heating temperature adjustment button **+/-**

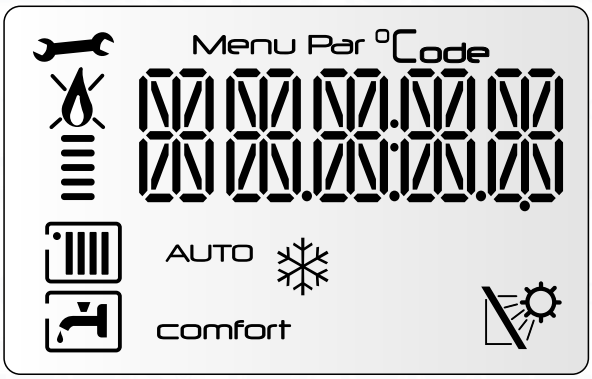

Digits indicating:
- boiler status and temperature indication (°C)
- error code signals (Err)
- menu settings

Technical assistance request

Flame detected with indication of power used or indication of operation shutdown

Heating operation set

Heating operation active

Hot water operation set

Hot water operation active

comfort — Hot Water Comfort activated

OFF — Boiler off with antifreeze function active

Antifreeze function activated

AUTO — AUTO function activated (Temperature regulation activated)

Clip-in solar connected (optional)

Note: A radio frequency (RF) Programmable Room Thermostat is available from Ariston stockists.
The Receiver unit can be fitted in the time clock position (10)

Overall view

CLAS HE EVO

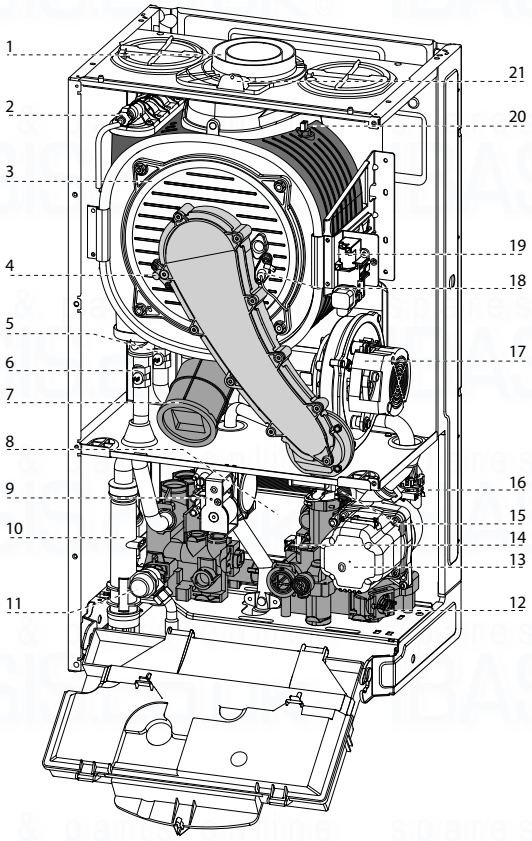

CLAS HE EVO SYSTEM

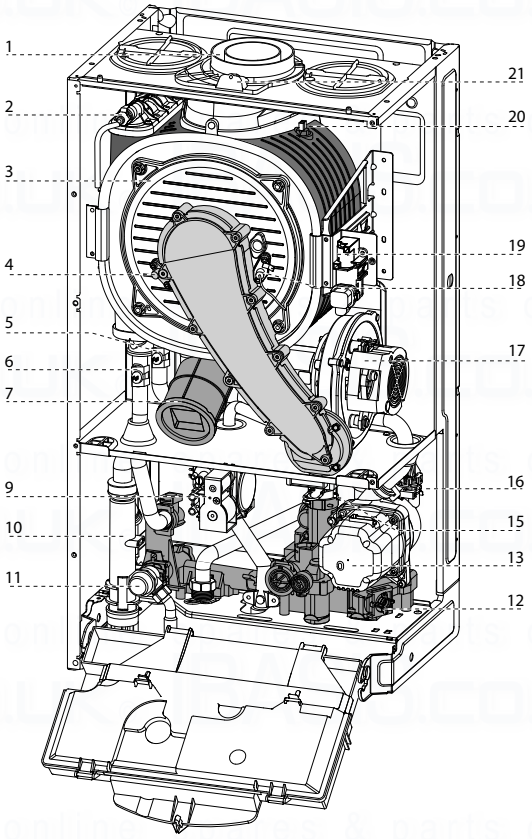

1. Flue connector
2. Manual air vent
3. Main heat exchanger
4. Detection electrode
5. C.H. Return temperature probe
6. C.H. Flow temperature probe
7. Silencer
8. Secondary heat exchanger
9. Gas valve
10. Trap
11. C.H. Pressure relief valve
12. C.H. Circuit filter
13. Modulating circulation pump with air release valve
14. D.H.W. Flow switch
15. Diverter valve
16. Low Water Pressure Switch
17. Modulating fan
18. Ignition electrodes
19. Ignitor
20. Thermal fuse
21. Combustion analysis test point

Overall Dimensions

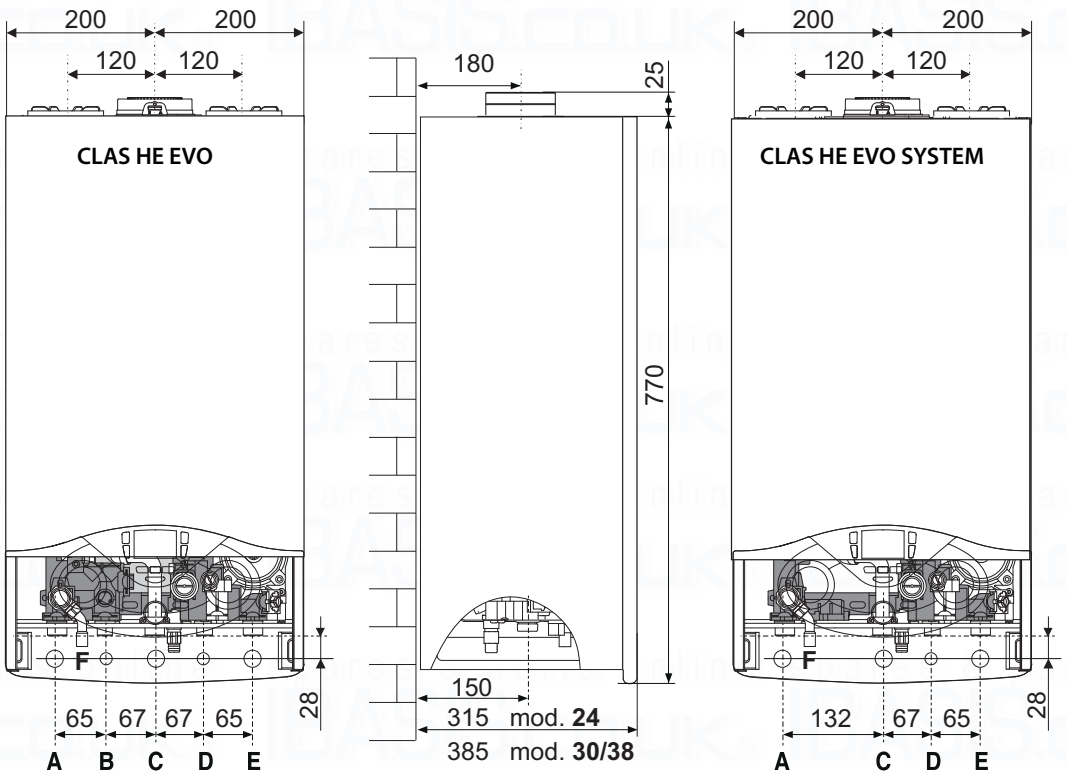

A. Central Heating Flow
B. Domestic Hot Water Outlet
C. Gas Inlet
D. Domestic Cold Water Inlet
E. Central Heating Return
F. Safety Relief Valve

Minimum clearances

In order to allow easy access to the boiler for maintenance operations, The boiler must be installed in accordance with the clearances stated below.

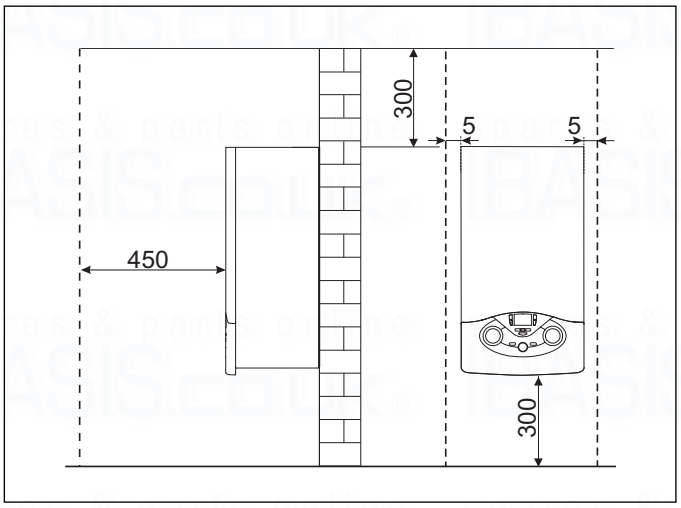

INSTALLATION

Reference Standards
In the United Kingdom, the installation and initial start-up of the boiler must be by a Gas Safe registered installer in accordance with the installation standards currently in effect, as well as with any and all local health and safety standards i.e. Gas Safe.

In the Republic of Ireland the installation and initial start-up of the appliance must be carried out by a Competent Person in accordance with the current edition of I.S.813 "Domestic Gas Installations" and the current Building Regulations, reference should also be made to the current ETCI rules for electrical installation.

The installation of this appliance must be in accordance with the relevant requirements of the Local Building Regulations, the current I.E.E. Wiring Regulations, the by-laws of the local authority, in Scotland, in accordance with the Building Standards (Scotland) Regulation and Health and Safety document No. 635, "Electricity at Work Regulations 1989" and in the Republic of Ireland with the current edition of I.S. 813 and the Local Building Regulations (IE).

C.O.S.H.H.
Materials used in the manufacture of this appliance are non-hazardous and no special precautions are required when servicing.

Codes of Practive
Installation should also comply with the following British Standards Code of Practice:

BS 7593: Treatment of water in domestic hot water central heating systems
BS 5546: Installation of hot water supplies for domestic purposes
BS 5440-1: Flues
BS 5440-2: Air supply
BS EN 12831 - BS EN 14336: Forced circulation hot water systems
BS 6798: Installation of gas fired hot water boilers of rated input not exceeding 70kW
BS 6891: Installation of low pressure gas pipes up to 28mm
BS 7671: IEE Wiring Regulations
BS 4814: Specification for expansion vessels
BS 5482: Installation of L.P.G.
Technical Bulletin TB143 Flue Gas Analysis

and in the Republic of Ireland in accordancce with the following codes of practice:

I.S. 813 Domestic Gas Installations

Avoid installing the boiler where the air inlet can be polluted by chemical products such as chlorine (swimming pool area), or ammonia (hair dresser), or alkalin products (launderette).

Flue
Detailed information on flue assembly can be found in the "**Connecting the Flue"** section.
The boiler must be installed so that the flue terminal is exposed to the free passage of external air at all times and must not be installed in a place likely to cause nuisance. It must not be allowed to discharge into another room or space such as an outhouse or closed lean-to.

Condensing boilers have a tendency to form a plume of water vapour from the flue terminal due to the low temperature of the flue gasses. The terminal should therefore be located with due regard for the damage or discolouration that may occur to building within the vicinity and consideration must also be given to adjacent boundaries, openable windows should also be taken into consideration when siting the flue.

The minimum acceptable clearances are shown below:

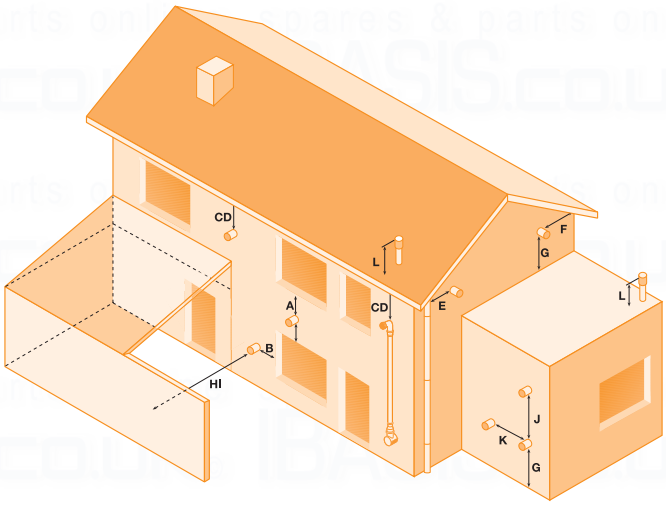

- A Directly below an opening, window, etc	300 mm
- B Horizontally to an opening, window, etc	300 mm
- C Below gutters, soils pipes or drain pipes	75 mm
- D Below eaves	200 mm
- E From vertical drain pipe or soil pipe	75 mm
- F From internal or external corner	300 mm
- G Above ground, roof or balcony level	300 mm
- H From a surface facing the terminal	600 mm
- I From a terminal facing a terminal	1200 mm
- J Vertically from a terminal on the same wall	1500 mm
- K Horizontally from an terminal on the same wall	300 mm
- L Fixed by vertical flue terminal	

NOTE: THE FLUE MUST NOT BE INSTALLED IN A PLACE LIKELY TO CAUSE A NUISANCE AND POSITIONED TO ENSURE THAT PRODUCTS OF COMBUSTION DO NOT DISCHARGE ACROSS A BOUNDARY

It may be necessary to protect the terminal with a guard, if this is the case it will be necessary to purchase a stainless steel terminal guard. Reference should be made to the Building Regulations for guidance.

Ventilation
The room in which the boiler is installed does not require specific ventilation. If the boiler is installed in a cupboard or compartment ventilation is not required for cooling purposes.

Gas Supply
The gas installation and tightness testing must be in accordance with the requirements of BS6891. Ensure that the pipe size is adequate for demand including other gas appliances on the same supply.

Electrical Supply
The appliance requires an earthed 230V - 50 Hz supply and must be in accordance with current I.E.E. regulations. It must also be possible to be able to completely isolate the appliance electrically. Connection should be via a 3 amp double pole fused isolating switch with contact separation of at least 3mm on both poles. Alternatively, a fused 3 amp, 3 pin plug and unswitched socket may be used, provided it is not used in a room containing a bath or shower, it. It should only supply the appliance.

Water Supply
The boiler is suitable for sealed systems only. The maximum working pressure for the appliance is 6 bar. All fittings and pipework for the appliance should be of the same standard. If there is a possibility of the incoming mains pressure exceeding 6 bar, particularly at night, then a suitable pressure limiting valve must be fitted.
The boiler is designed to provide hot water on demand to multiple outlets within the property. If there is a requirement for greater demands, for example if the boiler has several bathrooms and cloakrooms, a vented or unvented hot water storage system may be used.

Showers
Any shower valves used with the appliance should be of a thermostatic or pressure balanced type. Refer to the shower manufacturer for performance guidance and suitability.

Flushing and Water Treatment
The boiler is equipped with a stainless steel heat exchanger.

The detailed recommendations for water treatment are given in BS 7593:2006 (Treatment of water in domestic hot water central heating systems); the following notes are given for general guidance.

If the boiler is installed on an existing system, any unsuitable additives must be removed.

Under no circumstances should the boiler be fired before the system has been thoroughly flushed; the flushing procedure must be in line with BS 7593:2006.

We highly recommend the use of a flushing detergent appropriate for the metals used in the circuit. These include cleansers produced by Fernox BetzDearbon, whose function is to disolve any foreign matter that may be in the system.

In hard water areas or where large quantities of water are in the system the treatment of water to prevent premature scaling of the main exchanger is necessary.

The formation of scale heat compromises the efficiency of the thermic exchanger because small areas of scale cause a high increase of the temperature of the metallic walls and therefore add to the thermal stress of the heat exchanger.

Demineralised water is more aggressive so in this situation it is necessary to treat the water with an appropriate corrosion inhibitor.

Any treatment of water by additives in the system for frost protection or for corrosion inhibition has to be absolutely suitable for all metals used in the circuit.

The use of a corrosion inhibitor in the sysem such as Fernox MB-1, BetzDearborn Sentinel X100 or Fernox System Inhibitor is recommended to prevent corrosion (sludge) damaging the boiler and system;

If anti-freeze substances are to be used in the system, check carefully that they are compatible with the metals used in the circuit.

ARISTON suggests the use of suitable anti-freeze products such as Fernox ALPHI 11, which will prevent rust and incrustation taking place.

Periodically check the pH balance of the water/anti-freeze mixture of the boiler circuit and replace it when the amount measured is out of the range stipulated by the manufacturer (7 < pH < 8).
DO NOT MIX DIFFERENT TYPES OF ANTI-FREEZE

In under-floor systems, the use of plastic pipes without protection against penetration of oxygen through the walls can cause corrosion of the systems metal parts (metal piping, boiler etc), through the formation of oxides and bacterial agents.

To prevent this problem it is necessary to use pipes with an "oxygen proof barrier", in accordance with standards DIN 4726/4729. **If pipes of this kind are not used, keep the system separate by installing heat exchangers of those with a specific system water treatment.**

IMPORTANT
Failure to carry out the water treatment procedure will invalidate the appliance guarantee.

System Controls
The boiler is electrically controlled and is suitable for most modern electronic time and temperature controls. The addition of such external controls can be beneficial to the efficient operation of the system. The boiler connections for external controls are 12V DC and so only controls of 12V DC that have voltage free contacts should be used. (page 25).
ARISTON supply a range of wired and wireless system controls. Contact your supplier for more details.

Location
The boiler can be installed on any suitable internal wall (suitable sound proofing may be required when installing onto a stud partition wall). Provision must be made to allow for the correct routing of the flue and siting of the terminal to allow the safe and efficient removal of the flue products. A compartment or cupboard may be used provided that it has been built or modified for this purpose. It is not necessary to provide permanent ventilation for cooling purposes. Detailed recommendations are given in BS 5440 Part 2. If it is proposed that it is to be installed in a timber framed building then reference should be made to IGEM Document, IGE/UP/7 or advice sought from Gas Safe.
Where a room sealed appliance is installed in a room containing a bath or shower, the appliance and any electrical switch or appliance control, utilising mains electricity should be situated specifically in accordance with current IEE Wiring Regulations.

For unusual locations, special procedures may be necessary. **BS 6798** gives detailed guidance on this aspect.

INSTALLATION

Codensate Discharge

The condensate discharge hose from the boiler must have a continuous fall of 2.5° and must be inserted by at least 50mm into a suitable acid resistant pipe - e.g. plastic waste or overflow pipe. The condensate discharge pipe must have a minimum diameter of 22mm, must have a continuous fall and preferably be installed and terminated to prevent freezing. The discharge pipe must be terminated in a suitable position:

i) Connecting into an internal soil stack (at least 450mm above the invert of the stack). A trap giving a water seal of at least 75mm must be incorporated into the pipe run, there also must be an air beak upstream of the trap.

ii) Connecting into the waste system of the building such as a washing maching or sink trap. The connection must be upstream of the washing machine/sink. If the connection is downstream of the waste trap then an additional trap giving a minimum water seal of 75mm and an air break must be incorporated in the pipe run, as above.

iii) Terminating into a gully, below the grid level but above the water level

iv) Into a soakaway

Note: If any condensate pipework is to be installed externally then it should be kept to a minimum and be insulated with a waterproof insulation and have a continuous fall. The total length of external pipe used should not exceed 3 metres.

Some examples of the type of condensate terminations can be found below.

1. Internal termination of condensate drainage pipe to internal stack.

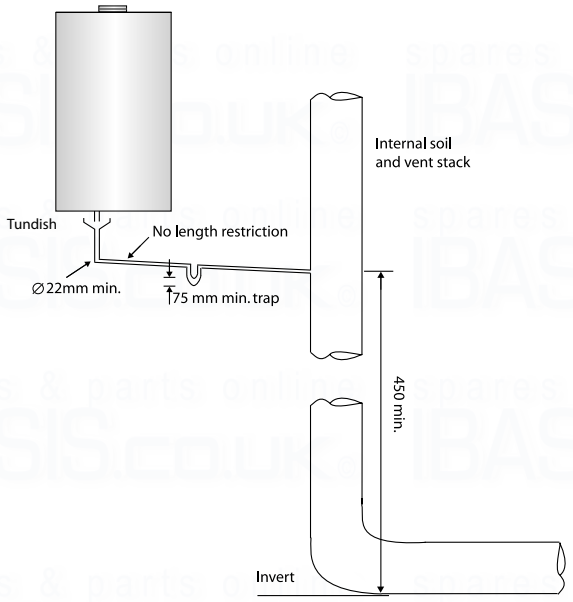

Condensate Discharge

Push fit the flexible condensate pipe into the outlet spigot on the appliance. Cut to length and locate outlet into a tundish

2. External termination of condensate drainage pipe via internal discharge branch (e.g. sink waste) and condensate siphon.

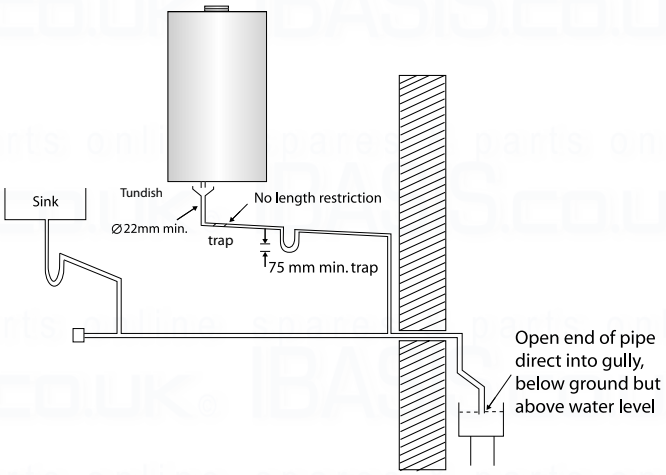

3. External termination of condensate drainage pipe via internal discharge branch (e.g. sink waste - proprietary fitting).

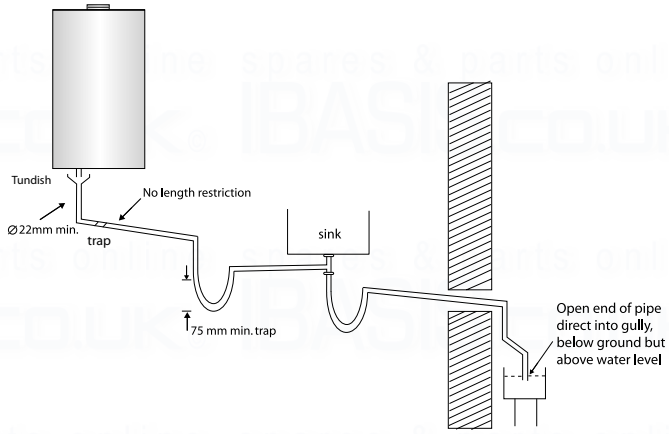

4. External termination of condensate drainage pipe via condensate siphon

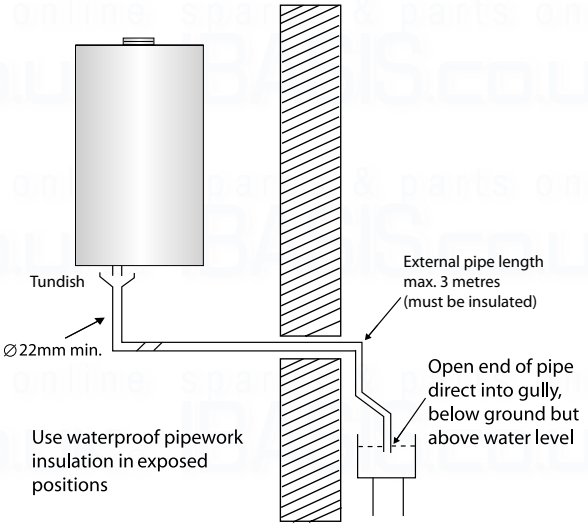

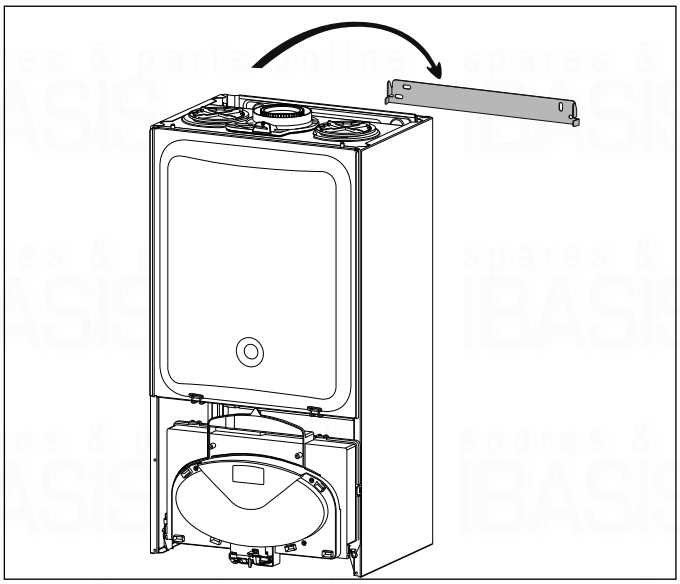

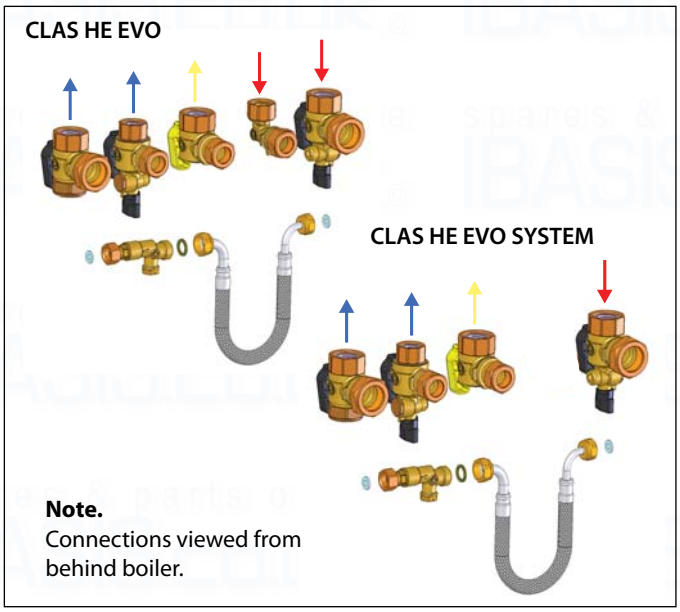

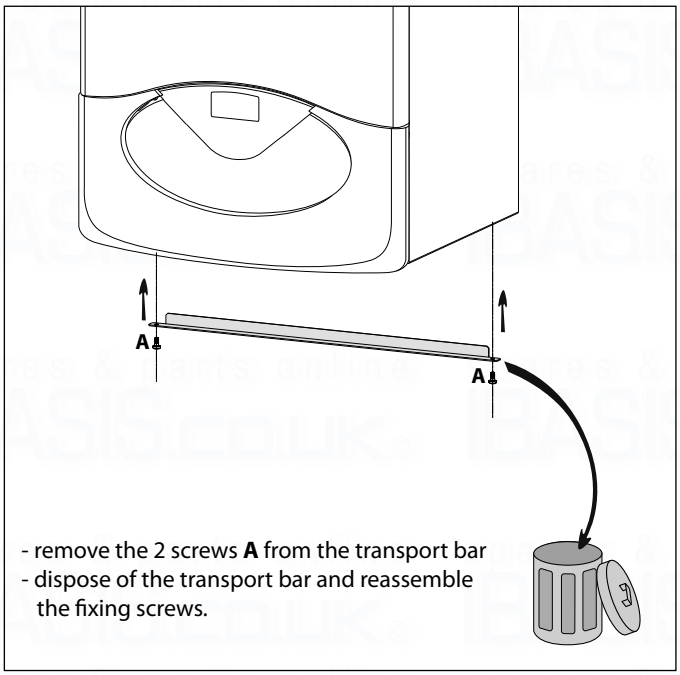

Installing the Boiler
Please check that you are familiar with the installation requirement before commencing work (pages 11 - 15).

The installation accessories described in the following list are included in the boiler packaging:
- Hanging bracket
- A paper template (showing the dimensions of the boiler with 5 mm side clearances)
- Connection valves (compression)
- Screws and washers
- Filling loop
- Installation, Servicing and User manual

Method of positioning the boiler on the wall
The paper template can be used to ensure the correct positioning of kitchen cabinets etc.

The paper template has to be fixed to the wall and used to locate the position of the hanging bracket and the centre for the flue hole. Drill and plug the wall and secure the hanging bracket using the screws provided ensure the hanging bracket is level. Remove the boiler from its packaging and remove the front casing panel. Place the boiler on the hanging bracket.

NOTE: THE APPLIANCE MUST NOT BE FITTED ON A COMBUSTIBLE WALL SURFACE.

Connecting the boiler to the system
- Remove the boiler casing as described on page 15
- Remove the caps and connect the valves to the boiler using the washers provided
- 5 x fibre washers for the CH flow and return, cold water inlet, gas and hot water outlet connections

Safety Valve Discharge
The pressure relief valve pipe is made of copper. It should terminate below the boiler safely outside the premises. Care should be taken that it does not terminate over an entrance or window or where a discharge of heated water could endanger occupants or passers by.

WARNING!
DO NOT APPLY HEAT TO THE COPPER SAFETY VALVE OUTLET PIPE WHILST IT IS CONNECTED TO THE 3 BAR SAFETY RELIEF VALVE.

Fill the central heating and DHW system and bleed air from the system as described in the Commissioning instructions (page 31).

The system should be carefully checked for leaks, as frequent refilling could cause premature system corrosion or unnecessary scaling of the heat exchanger. The pipe from the trap should be connected to a drain as described in the relevant regulations.

Pay special attention not to bend the condensate silicone drain pipe is such a way as to interrupt the flow. Please only use drain pipe material compatible with condensate products (refer to BS 6798:2009).

The condensate flow can reach 2 litres/hour because of the acidity of the condensate products (Ph close to 2), take care before operation. See page 15 for condensate discharge options.

Gas connection

Make sure, using the labels on the packaging and the data plate on the appliance itself, that the boiler is in the correct country and that the gas category for which the boiler was designed corresponds to one of the categories available in the country where it will be used.

The gas supply piping must be created and measured out in compliance with specific legal requirements and in accordance with the maximum power of the boiler.

Check that the supplied gas corresponds to the type of gas for which the boiler was designed (see the data plate located on the appliance itself).

It is also important to check that the pressure of the gas (methane or LPG) you will be using to feed the boiler is suitable, because if it is insufficient the power may be reduced, causing inconvenience for the user.

Water connection

The illustration below shows the connections for the water and gas attachments of the boiler. See valves configuration on page 14.

Check that the maximum water mains pressure does not exceed 6 bar; if it does, a pressure reducing valve must be installed.

For the measuring of the pipes and of the heating bodies in the heating system, the residual head value should be calculated as a function of the requested flow rate, in accordance with the values shown in the circulation pump graph.

CLAS HE EVO

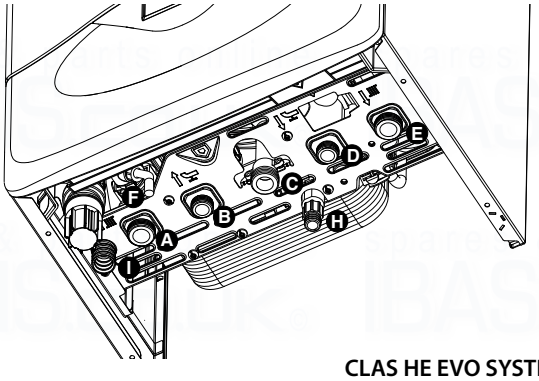

CLAS HE EVO SYSTEM

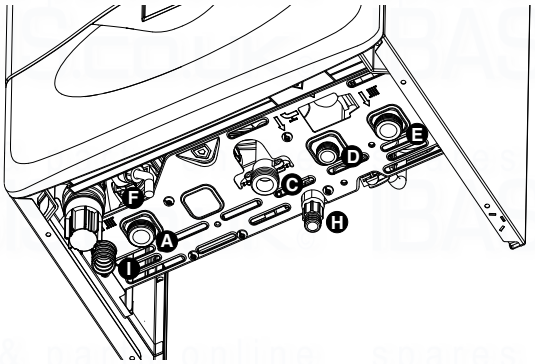

A. Central heating Flow
B. Domestic Hot Water Outlet
C. Gas Inlet
D. Domestic Cold Water Inlet
E. Central Heating Return
F. Safety Valve Discharge
H. Drain Valve
I. Drain condensate

Instructions for opening the casing and performing an internal inspection

Before performing any work on the boiler, first disconnect it from the electrical power supply using the external bipolar switch removing the fuse and shutting off the gas valve.

To access the inside of the boiler, the following is necessary:

1. Remove the casing by unhooking it from the control panel (a)
2. Loosen the two screws on the front casing (b), pull it forwards and unhook it from the upper pins (c)
3. Lower the control panel (d)
4. Unhook the two clips on the combustion chamber panel and lift off (e).

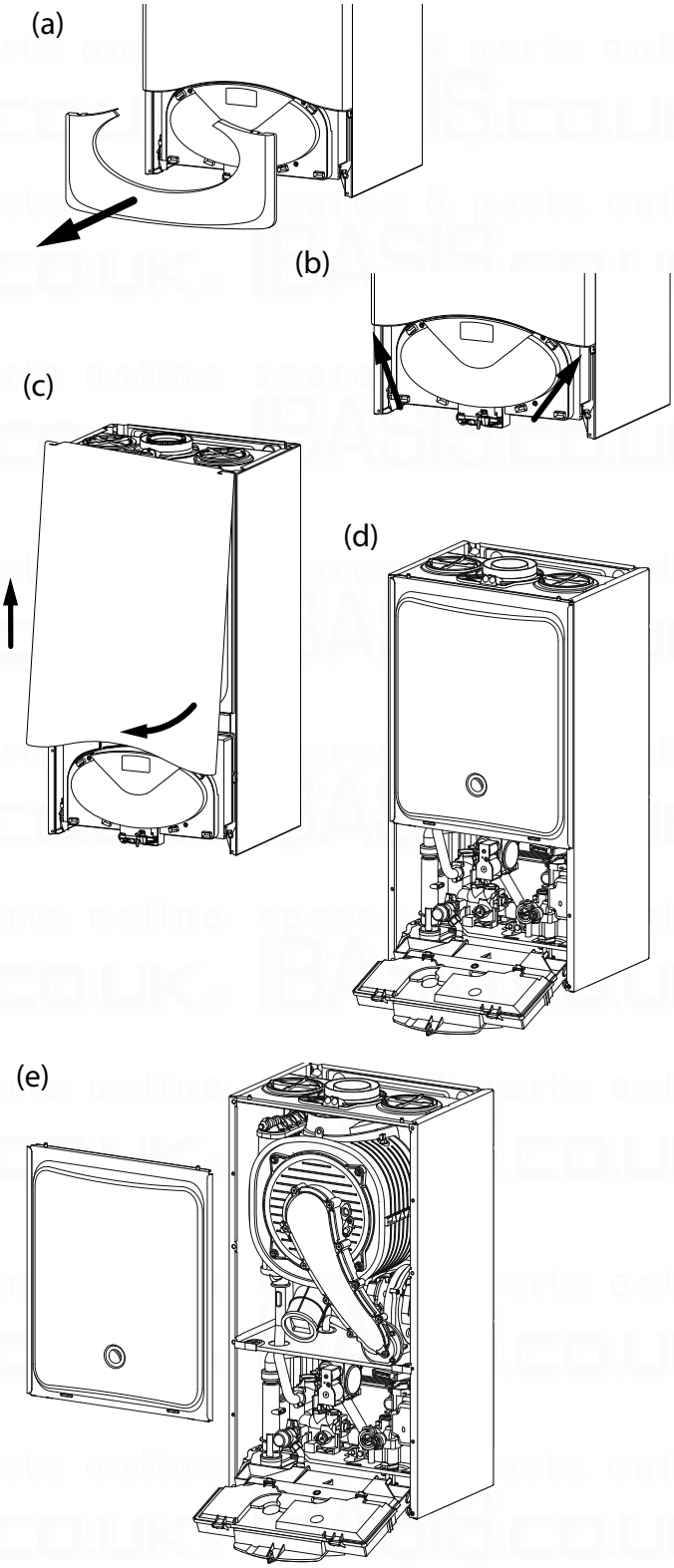

To calculate the size of the heating installation, refer to the "Available pressure" graph below.

Graph representing the available circulation pump pressure ΔT20°C

CLAS HE EVO

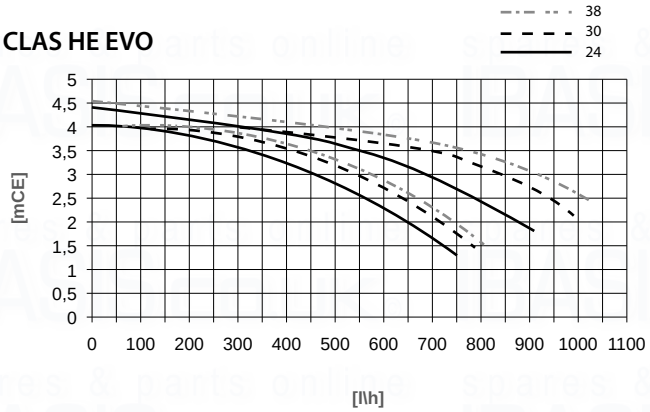

CLAS HE EVO SYSTEM

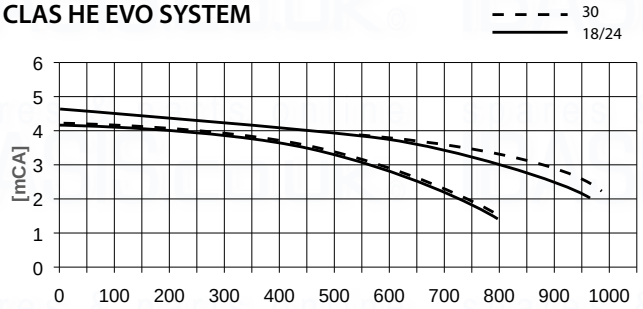

BEFORE THE EQUIPMENT IS USED, FOR THE FIRST TIME THE TRAP MUST BE FILLED WITH WATER. TO DO THIS, ADD APPROXIMATELY 1/4 LITRE OF WATER VIA THE FLUE OUTLET BEFORE FITTING THE FLUE SYSTEM, OR UNSCREW THE CAP ON THE TRAP POSITIONED UNDERNEATH THE BOILER, FILL IT WITH WATER AND REFIT IT

WARNING!
INSUFFICIENT WATER IN THE TRAP CAN TEMPORARILY CAUSE THE FLUE GAS TO BE EXPELLED INTO THE SURROUNDING AMBIENT AIR

Underfloor heating
For appliances with underfloor heating, it is possible but not necessary to fit a safety thermostat onto the underfloor heating outlet. For the electrical connection of the thermostat see the section on "Electrical connections - page 25".

If the outlet temperature is too high, the boiler will stop both domestic hot water and the heating production and the error code 1 16 "floor thermostat contact open" will appear on the display. The boiler will restart when the thermostat is closed during automatic resetting.

If the thermostat cannot be installed, the underfloor heating equipment must be protected by a thermostatic valve, or by a by-pass to prevent the floor from reaching too high a temperature.

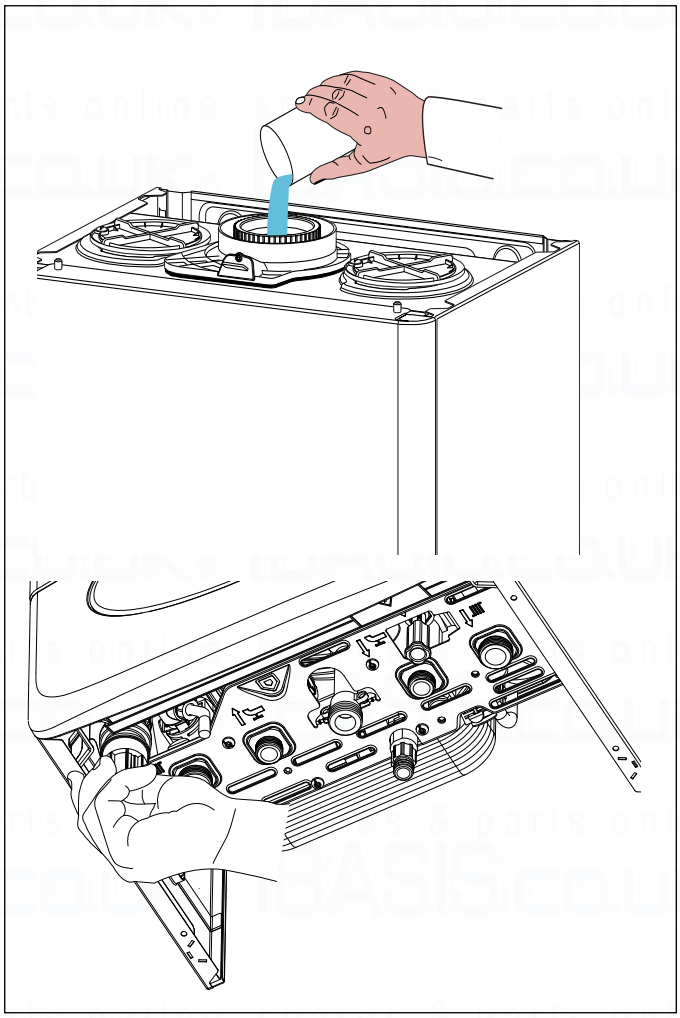

INSTALLATION

Water circuit diagram

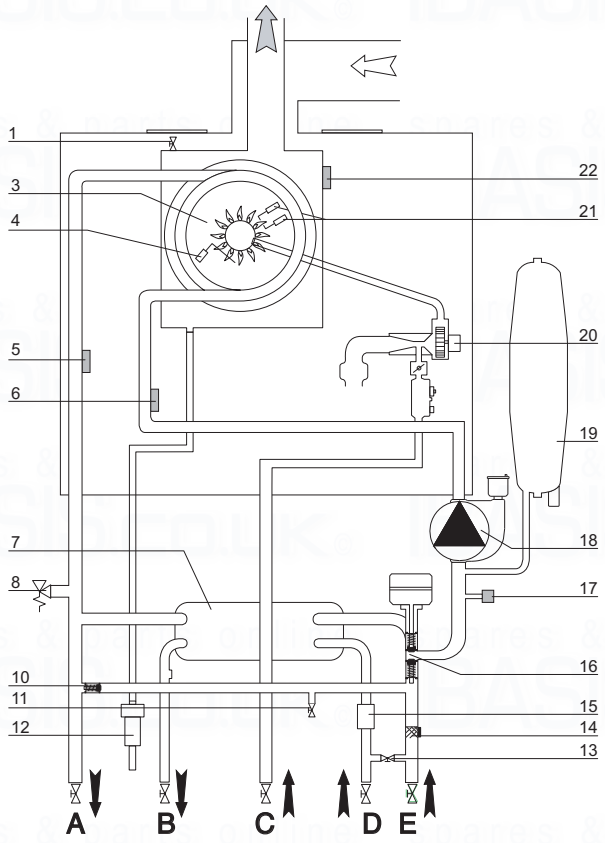

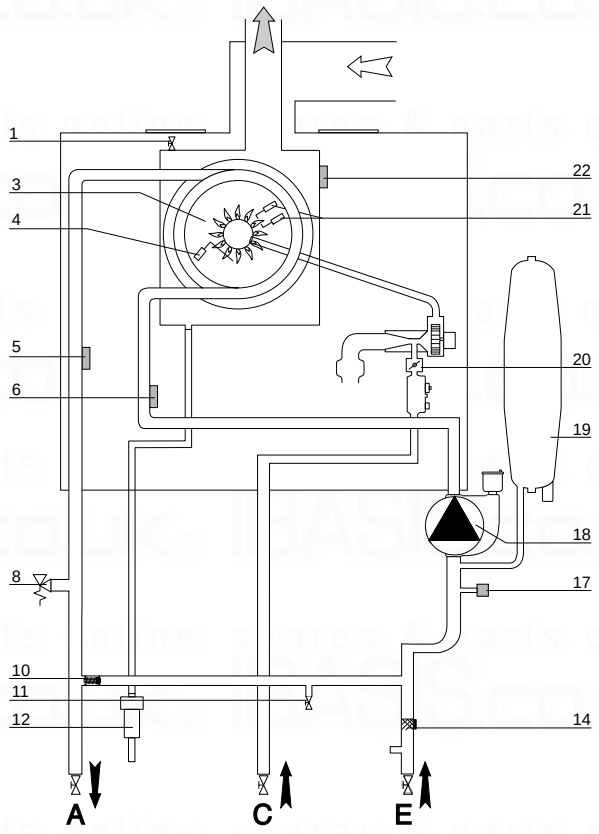

1. Manual air vent
3. Burner
4. Detection electrode
5. C.H. flow temperature probe
6. C.H. return temperature probe
7. Secondary heat exchanger
8. C.H. pressure relief valve
10. By-pass
11. Drain valve
12. Condensate trap
13. Filling loop
14. C.H. circuit filter
15. D.H.W. Flow switch
16. diverter valve
17. water pressure sensor
18. circulation Pump
19. expansion vessel
20. modulating Fan
21. ignition electrodes
22. thermal fuse

Connecting the Flue

Flue System

The provision for satisfactory flue termination must be made as described in BS 5440-1.

The appliance must be installed so that the flue terminal is exposed to outdoor air.

The terminal must not discharge into another room or space such as an outhouse or lean-to.

It is important that the position of the terminal allows a free passage of air across it at all times.

The terminal should be located with due regard for the damage or discolouration that might occur on buildings in the vicinity, it must also be located in a place not likely to cause nuisance.

In cold or humid weather water vapour may condense on leaving the flue terminal.

The effect of such "steaming" must be considered.

If the terminal is less than 2 metres above a balcony, above ground or above a flat roof to which people have access, then a suitable stainless steel terminal guard must be fitted.

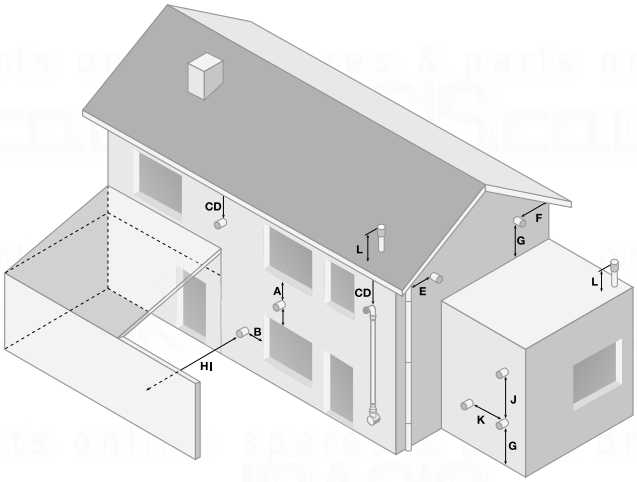

Fig. 1

The minimum acceptable spacing from the terminal to obstructions and ventilation openings are specified in Fig. 1.

- A Directly below an opening, window, etc	300 mm
- B Horizontally to an opening, window, etc	300 mm
- C Below gutters, soils pipes or drain pipes	75 mm
- D Below eaves	200 mm
- E From vertical drain pipe or soil pipe	75 mm
- F From internal or external corner	300 mm
- G Above ground, roof or balcony level	300 mm
- H From a surface facing the terminal	600 mm
- I From a terminal facing a terminal	1200 mm
- J Vertically from a terminal on the same wall	1500 mm
- K Horizontally from an terminal on the same wall	300 mm
- L Fixed by vertical flue terminal	

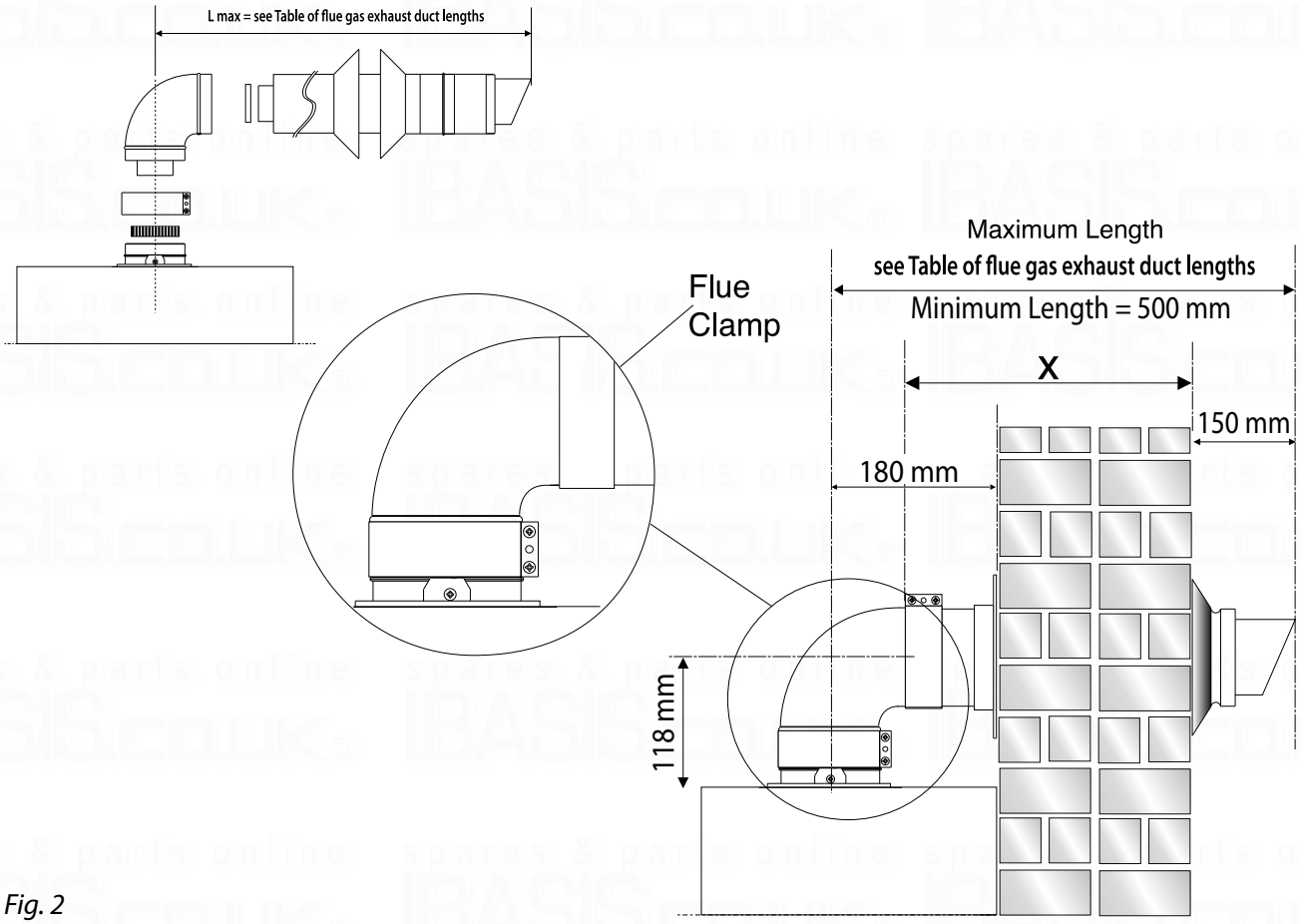

Fig. 2

Warning
The exhaust gas ducts must not be in contact with or close to inflammable material and must not pass through building structures or walls made of inflammable material.
When replacing an old appliance, the flue system must be changed.

INSTALLATION

Important
Ensure that the flue is not blocked.
Ensure that the flue is supported and assembled in accordance with these instructions.

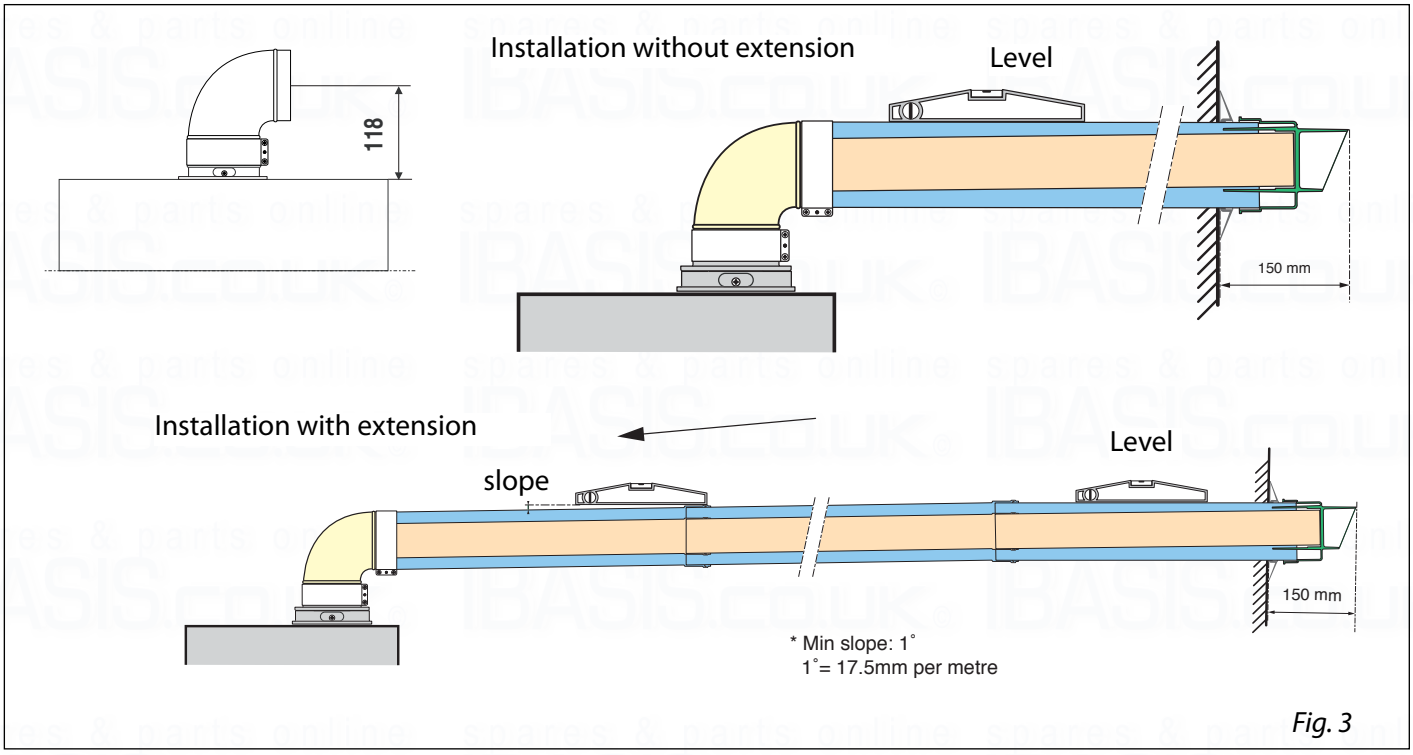

Fig. 3

Fitting the Coaxial Flue (Ø 60 / 100 Horizontal)

Contents:
1x Silicone O-Ring (60mm)
1x Elbow (90°)
2x Wall Seals (Internal & External)
1x Flue Pipe including Terminal (1 metre - 60/100)
2x Flue Clamps
4x Screws
2x Seals

Once the boiler has been positioned on the wall, fit the rubber flue seal into the internal flue turret (see diagram opposite),

Insert the elbow into the socket and rotate to the required position. note: It is possible to rotate the elbow 360° on its vertical axis.

Using the flue clamp, seals and screws supplied (Fig 4) secure the elbow to the boiler.

The 1 metre horizontal flue kit (3318073) supplied is suitable for an exact X dimension of 753mm.

Measure the distance from the face of the external wall to the face of the flue elbow (X - Fig 2), this figure must now be subtracted from 753mm, you now have the total amount to be cut from the plain end of the flue.

Note: A Plume management kit is available for 60/100 horizontal termination. Instructions for installation are supplied with the Plume management kit.

Draw a circle around the outer flue and cut the flue to the required length taking care not to cut the inner flue, next cut the inner flue ensuring that the length between the inner and outer flue is maintained. (Fig 4).

e.g.
X = 555mm
753-555 = 198mm (Length to be cut from the plain end of the flue).

Once cut to the required length, ensure that the flue is free from burrs and reassemble the flue. If fitting the flue from inside of the building attach the outer wall seal to the flue terminal and push the flue through the hole, once the wall seal has passed through the hole, pull the flue back until the seal is flush with the wall. Alternatively, the flue can be installed from outside of the building, the outer seal being fitted last.

Should the flue require extending, the flue connections are push fit, however, one flue bracket should be used to secure each metre of flue.

Note: See table for maximum and minimum flue runs.

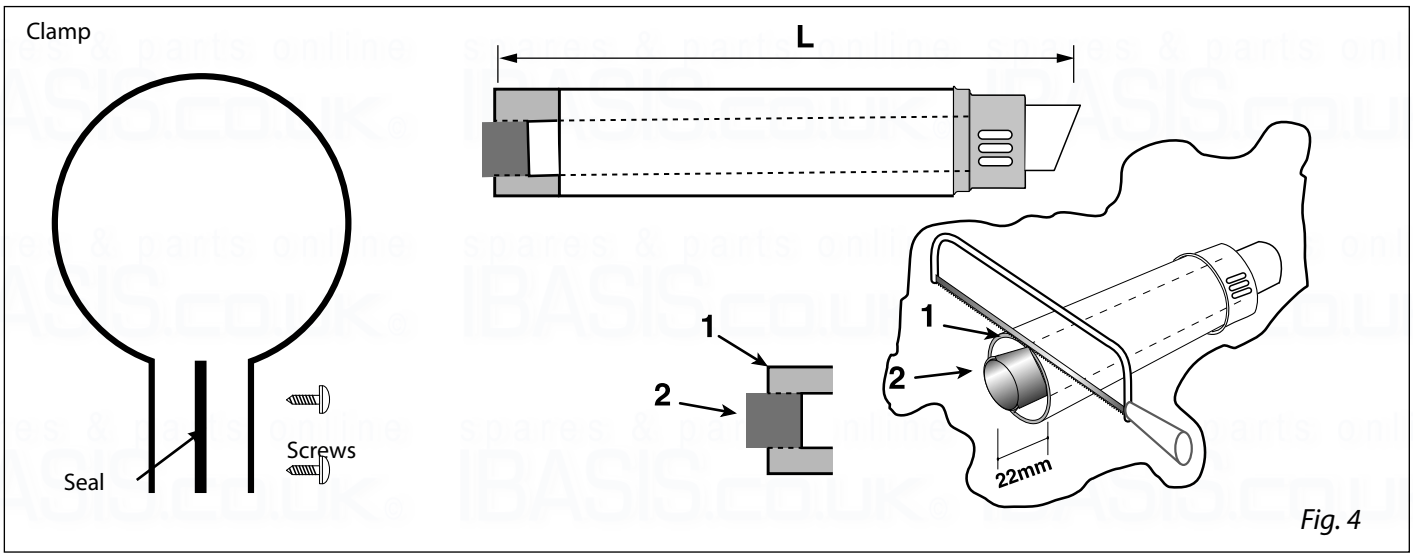

Fig. 4

Fitting the 5" Flue

(Ø 80 / 125 Horizontal/vertical)

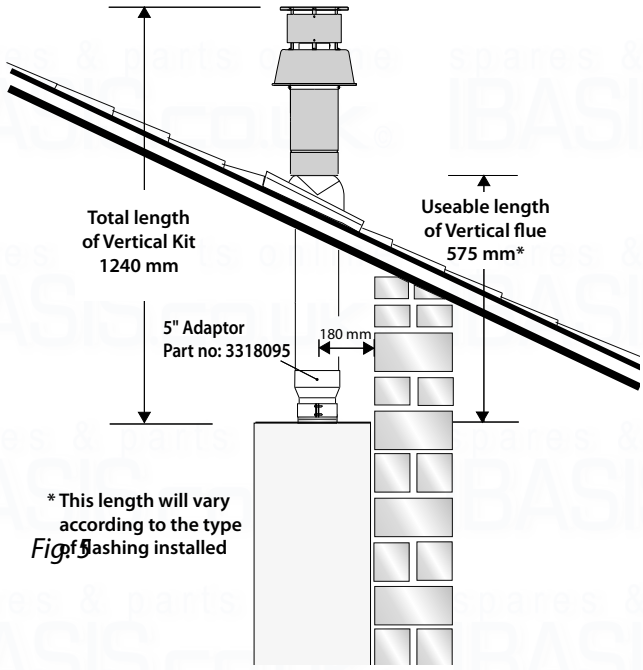

Fig. 5

Once the boiler has been positioned on the wall, it is necessary to insert the Ø80/125 adaptor (Fig. 5) for both horizontal and vertical flue runs into the boiler flue socket (not supplied with flue kit - Part No 3318095).

Push the adaptor onto the boilers flue connection, grease the seals then add extensions or elbows as required, secure the adaptor, using the clamp and screws provided.

To fit extensions or elbows it is first necessary to ensure that the lip seal is fitted correctly into the inner flue, once verified, it is simply necessary to push them together, no clamps are necessary to secure the flue components.

Before proceeding to fit the flue, ensure that the maximum flue length has not been exceeded (See the tables) and that all elbows and bends have been taken into consideration, for each additional 90° elbow 1 metre must be subtracted from the total flue length, and for each 45° 0.5 metres must be subtracted from the total flue length (the height of the vertical adaptor and a 45° bend can be seen in Fig.6 and a 90° bend in Fig. 7).

Note: DO NOT cut the vertical flue kit.

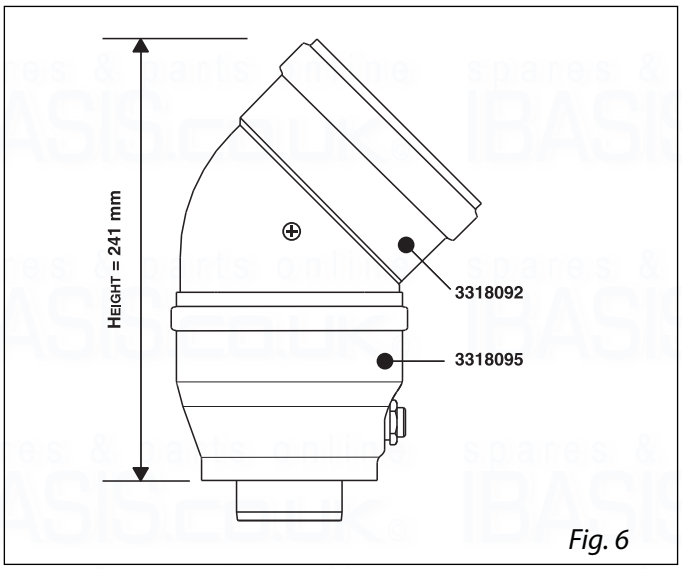

Fig. 6

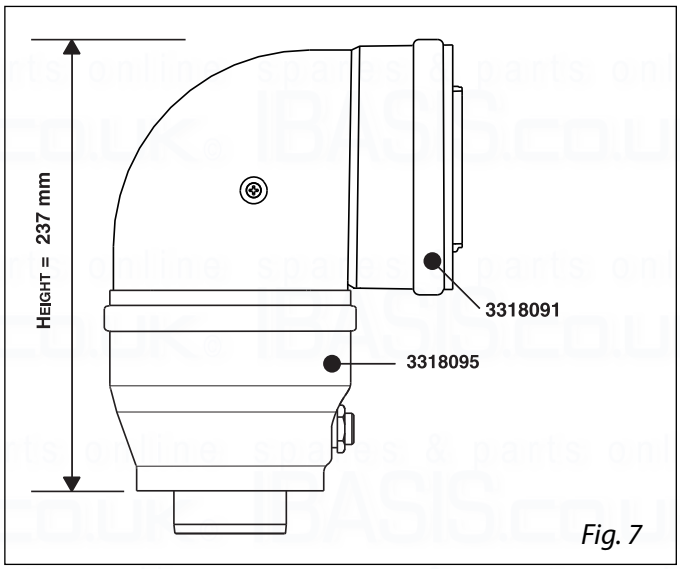

Fig. 7

INSTALLATION

Fitting the Coaxial Flue
(Ø 60 / 100 Vertical)

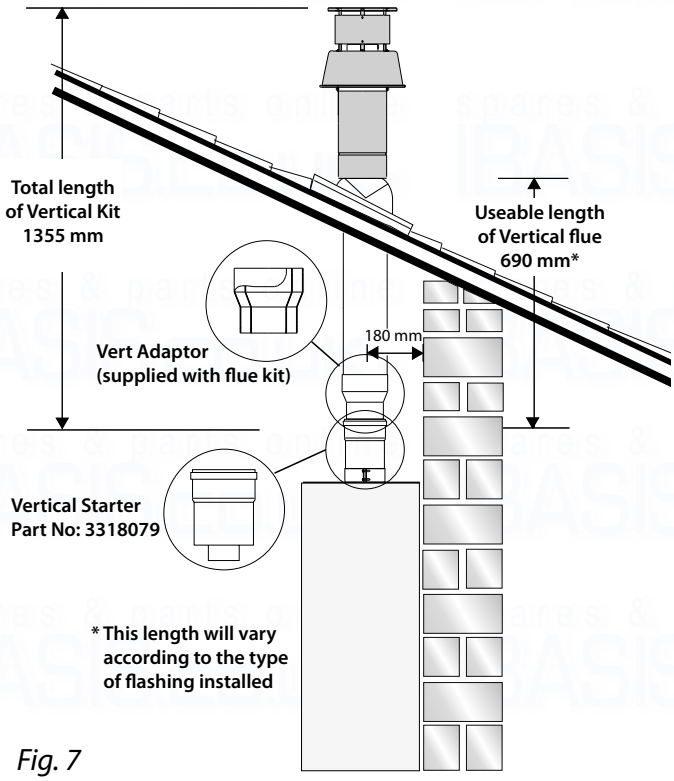

Fig. 7

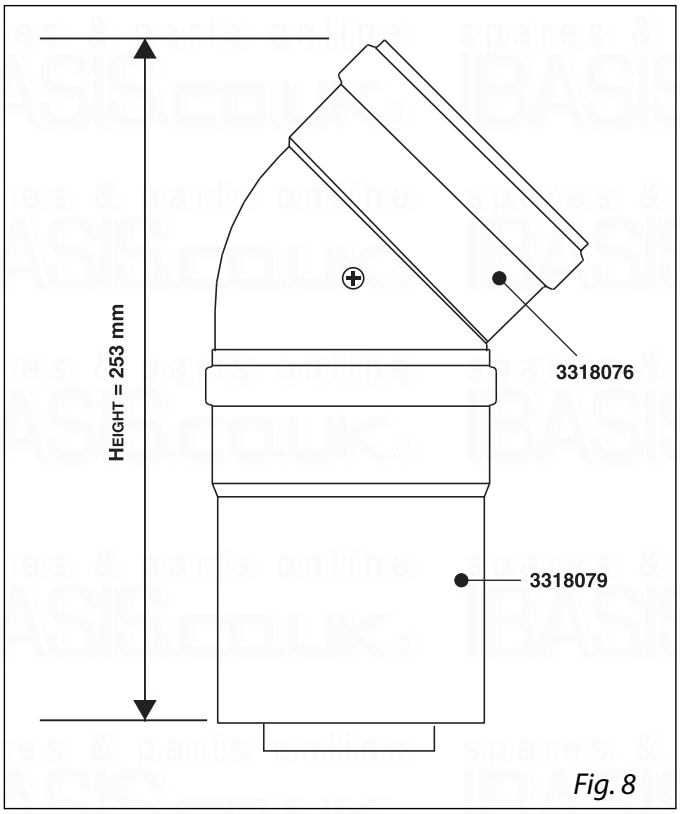

Fig. 8

Note: See table for maximum and minimum flue runs.

Contents:
1x Conical Adaptor (60/100mm)
1x Vertical Flue Kit (80/125mm)

The vertical flue kit is supplied with a specially designed weather proof terminal fitted, it can be used either with a flat roof or a pitched roof.

The Vertical flue kits useable lengths with the pitched roof flashings are indicated in Fig. 7.

Before proceeding to fit the flue, ensure that the maximum flue length has not been exceeded (See the tables) and that all elbows and bends have been taken into consideration, for each additional 90° elbow 1 metre must be subtracted from the total flue length, and for each 45° 0.5 metres must be subtracted from the total flue length (the height of the vertical adaptor and a 45° bend can be seen in Fig. 8).

Mark the position of the flue hole in the ceiling and/or roof (see Fig. 7 for distance from wall to the centre of the flue).

Cut a 130mm diameter hole through the ceiling and/or roof and fit the flashing plate to the roof.

DO NOT cut the vertical flue kit.

To connect the vertical flue kit directly to the boiler, place the vertical starter kit (Part No. 3318079) (see Fig. 7) onto the exhaust manifold and secure with the clamp, fit the vertical adaptor onto the vertical starter kit (note: there is no need to use a clamp to secure this as it is a push fit connection), the vertical flue kit must then be inserted through the roof flashing, this will ensure that the correct clearance above the roof is provided as the terminal is a fixed height.

Should extensions be required, they are available in 1 metre (Part No. 3318077), 500mm (Part No. 3318078) and they must be connected directly to the vertical starter kit before connecting the adaptor to allow the vertical flue kit to be fitted. In the event that extension pieces need to be shortened, they must only be cut at the male end and it must be ensured that the inner and outer flue remain flush.

When utilising the vertical flue system, action must be taken to ensure that the flue is supported adequately to prevent the weight being transferred to the appliance flue connection by using 1 flue bracket per extension.

When the flue passes through a ceiling or wooden floor, there must be an air gap of 25mm between any part of the flue system and any combustible material. The use of a ceiling plate will facilitate this. Also when the flue passes from one room to another a fire stop must be fitted to prevent the passage of smoke or fire, irrespective of the structural material through which the flue passes.

Fitting the Twin Pipe (Ø80 / 80)

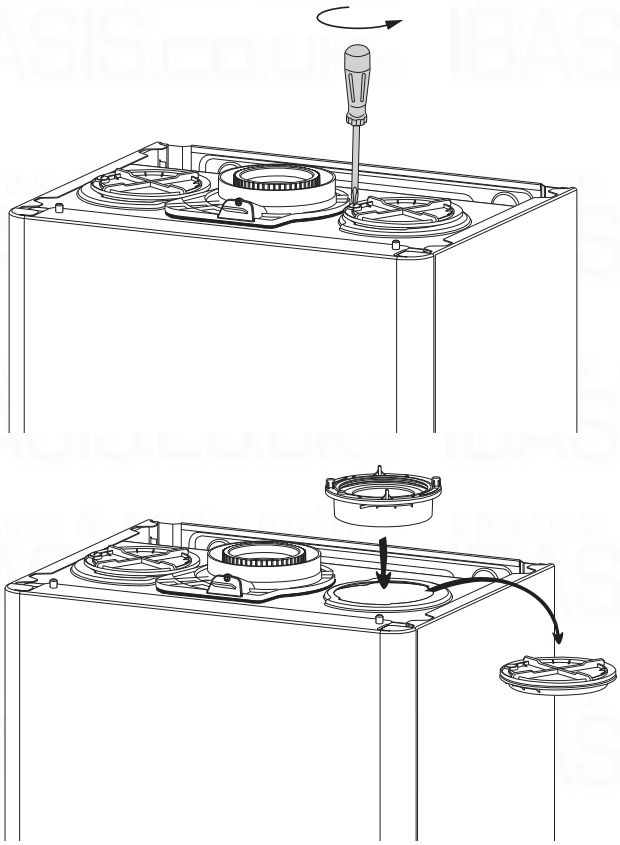

Note: See table for maximum and minimum flue runs.

Where it is not possible to terminate the flue within the distance permitted for coaxial flues, the twin flue pipe can be used by fitting a special adaptor to the flue connector and using the aperture for the air intake located on top of the combustion chamber.

Always ensure that the flue is adequately supported, using one flue bracket per extension and avoiding low points. (ARISTON supply suitable clamps as Part No. 705778).
To utilise the air intake it is necessary to:

1) Take the air intake cover off the top of the appliance
2) Assemble the flange on the header supplied with the boiler
3) Insert the header on the tube or the elbow up until the lower stop (you do not have to use the washer).
4) Insert the elbow/header in the boiler air intake hole and fasten it with screws.

The twin flue pipes can be fitted with or without additional elbows and need no clamps, simply ensure that the lip seal is inserted in the female end of the flue pipe and push the extension piece fully into the previous section of flue pipe or elbow, check that the lip seal is not dislodged when assembling the flue (greasing the seal will aid assembly).

Twin pipe can also be converted back to Coaxial flue to enable vertical termination with a coaxial kit by using the pipe bridge (Twin - Coaxial Adaptor - Part No. 3318089). When running the twin flue pipe vertically.

It is not possible to terminate concentrically horizontally. Termination is only possible with separate air and exhaust terminals.

When siting the twin flue pipe, the air intake and exhaust terminals must terminate on the same wall, the centres of the terminals must be a minimum of 280 mm apart and the air intake must not be sited above the exhaust terminal (refer to Fig. 10). The air intake pipe can be run horizontally, however, the terminal and the final 1 metre of flue must be installed either horizontally or with a slight fall away from the boiler to avoid rain ingress.

It is also strongly recommended that the air intake pipe run be constructed of insulated pipe to prevent condense forming on the outside of the tube.

Ensure the exhaust tube has a minimum fall back to the boiler of 1˚ / metre (1˚ = 17.5mm/metre)

The maximum permissible flue length for twin flue is dependent on the type of run used (see table on page 24).

For further information relating to flue runs not illustrated, please contact the Technical Department on 0870 241 8180.

INSTALLATION

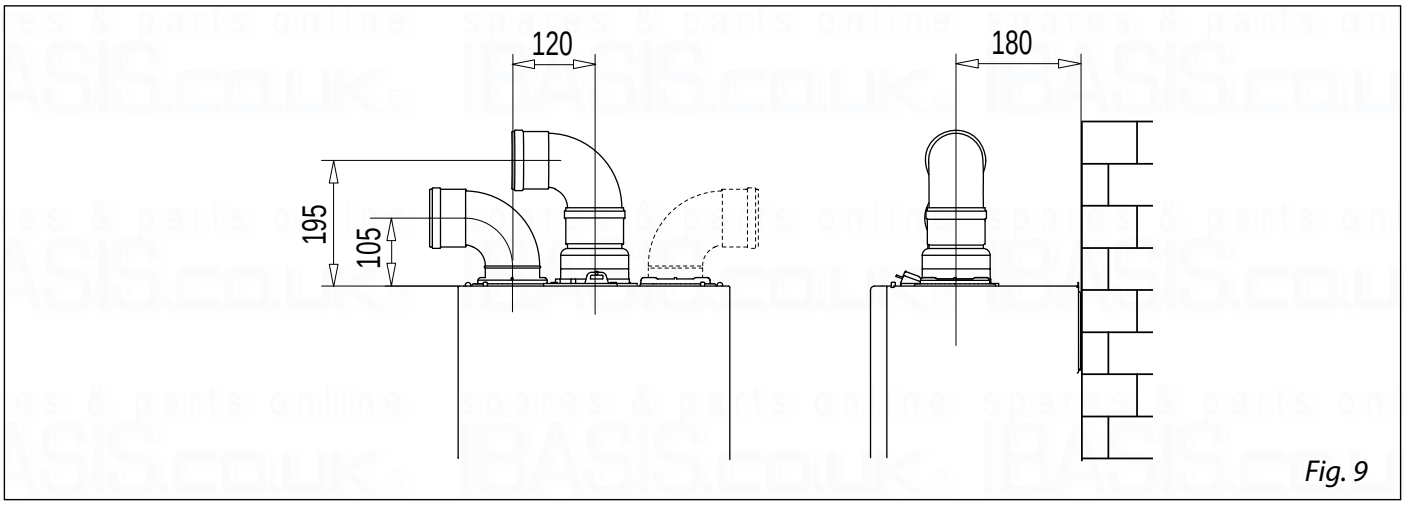

Fig. 9

For coaxial systems, the maximum development value, mentioned in the table below also takes into account an elbow.
For twin flue systems the maximum development value, mentioned in the table includes the exhaust gas/air intake terminal.

Twin flue systems outlets should respect the following instructions:
1- Use the same ø 80 mm flue pipes for the air intakes and exhaust gas ducts.
2- If you need to insert elbows in the air intake and exhaust gas ducts, you should consider for each one the equivalent length to be included in the calculation of developed length.
3- The exhaust gas duct should jut above the roof by at least 0.5 m.
4- The intake and exhaust gas ducts in Type C13 + C53 must be installed on the same wall, or where the exhaust is vertical and the air intake horizontal, the terminals must be on the same side of the building.

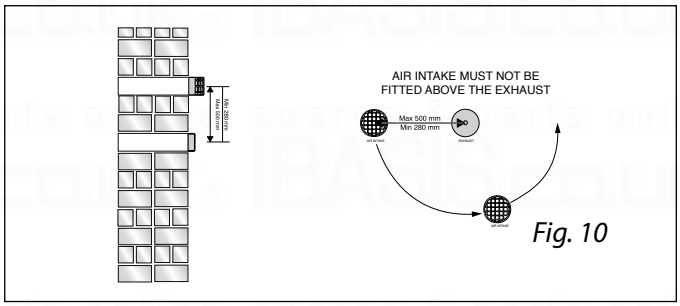

Fig. 10

Table of flue gas exhaust duct lengths

FLUE TYPE		Maximum Extension Exhaust-air (m)						Diameter of pipe (mm)
		CLAS HE EVO			CLAS HE EVO SYSTEM			
		24	30	38	18	24	30	
Coaxial System	C13 C33 C43	12	10	7	14	12	10	ø 60/100
	C13 C33 C43	36	30	20	42	36	30	ø 80/125
Twin-pipe System		S1 = S2						ø 80/80
	C13	24/24	26/26	16/16	36/36	24/24	26/26	
	C33	40/40	50/50	28/28	60/60	40/40	50/50	
	C43	24/24	26/26	16/16	36/36	24/24	26/26	
	C53	S1 + S2			S1 + S2			
		60	50	35	50	60	50	ø 80/80

S1 = Air intake S2 = Flue gas exhaust

S1 = S2 - Air intake and flue gas exhaust equal lengths
S1 + S2 - Air intake and flue gas exhaust unequal lengths

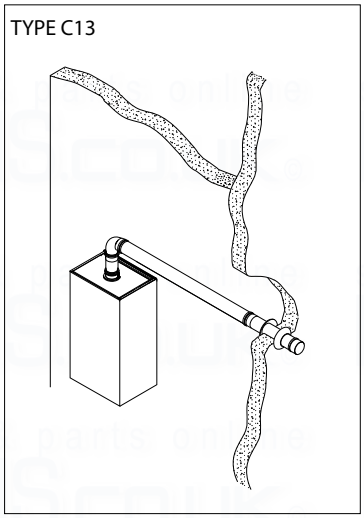

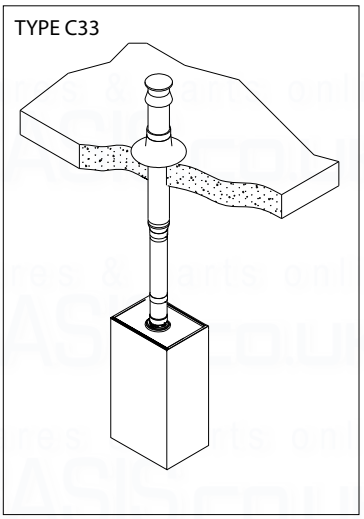

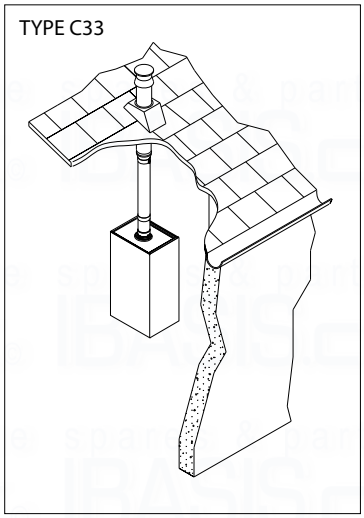

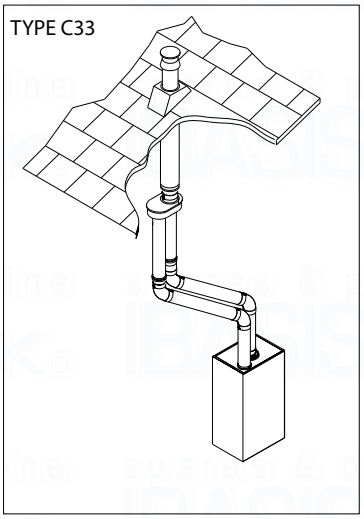

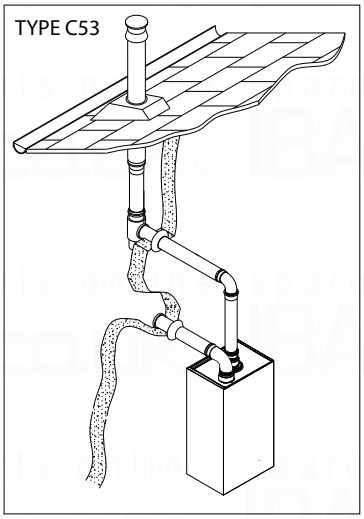

INSTALLATION

WARNING!
BEFORE PERFORMING ANY WORK ON THE BOILER, FIRST DISCONNECT IT FROM THE ELECTRICAL POWER SUPPLY USING THE EXTERNAL BIPOLAR SWITCH AND REMOVE THE FUSE.

Electrical connections
For increased safety, ask a qualified technician to perform a thorough check of the electrical system.
The manufacturer is not responsible for any damage caused by the lack of a suitable earthing system or by the malfunctioning of the electricity mains supply.
Make sure that the system is able to withstand the maximum power absorbed by the boiler (this is indicated on the appliance data plate).
Check that the section of the wires is suitable and is not less 0,75 mm^2
The appliance must be connected to an effiecient earthing system if it is to operate correctly.
The power supply cable must be connected to a 230V-50Hz network, where the L-N poles and the earth connection are all respected.
Important!
In the event that the power supply cable must be changed, replace it with one with the same specifications.

Power supply cable

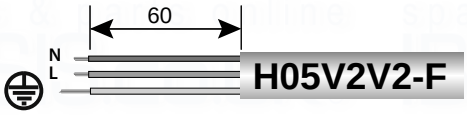

Important!
The appliance is supplied with a fly-lead already connected, this must be connected to a 240V supply fused at 3 Amp and must facilitate completed electrical isolation of the appliance, by use of a fused double pole isolator having a contact separation of at least 3mm in all poles or alternatively by means of a 3A fused three pin plug and unswitched shuttered socket outlet both complying with BS1363.

The use of multiplugs, extension leads or adaptors is strictly prohibited.
It is strictly forbidden to use the piping from the hydraulic, heating and gas systems for the appliance earthing connection.
The boiler is not protected against the effects caused by lightning. If the mains fuses need to be replaced, use 2A rapid fuses.

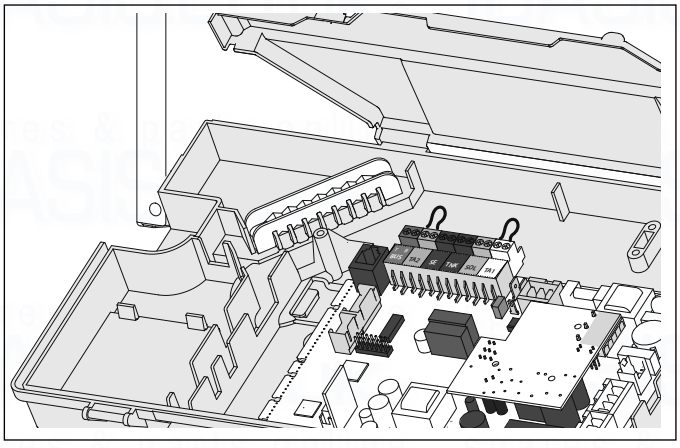

Peripheral unit connection
To access peripheral unit connections carry out the following steps:
- Disconnect the boiler from the power supply
- Remove the casing by unhooking it from the instrument panel
- Rotate the control panel while pulling it forwards
- Unhook the two clips "a", rotate the cover "b" to have access to the peripherical connections
- Unscrew the two screws "c" and remove the cover "d" of the instrument panel to have access to the main P.C.B.

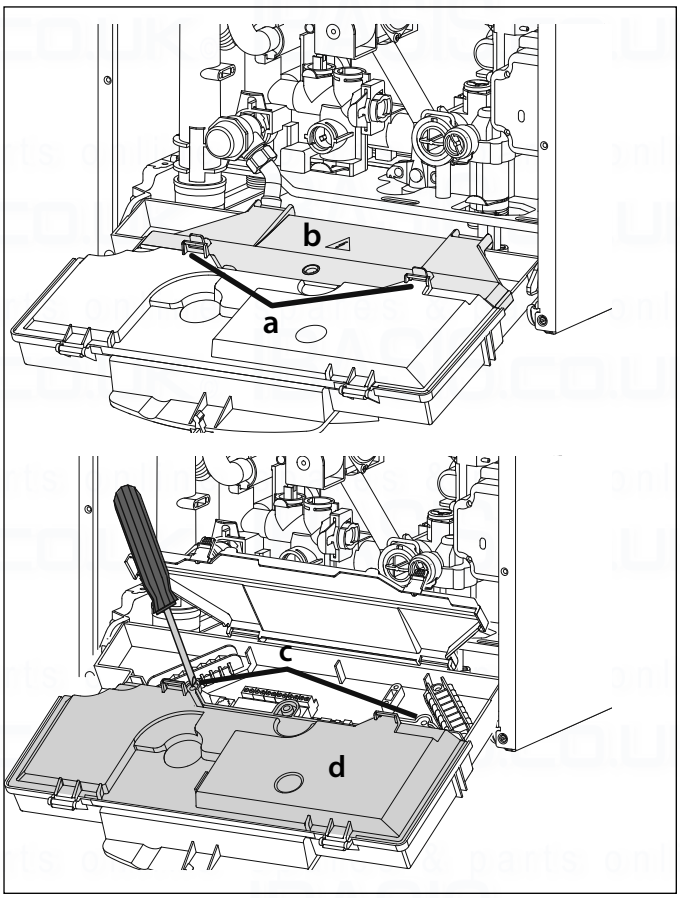

Peripheral connections:
BUS = Remote control connection
FLOOR/TA2 = the underfloor heating thermostat or the room thermostat 2 (selected via parameter 223)
SE = the external sensor.
SOL = Solar temperature probe
TA1 = the room thermostat 1

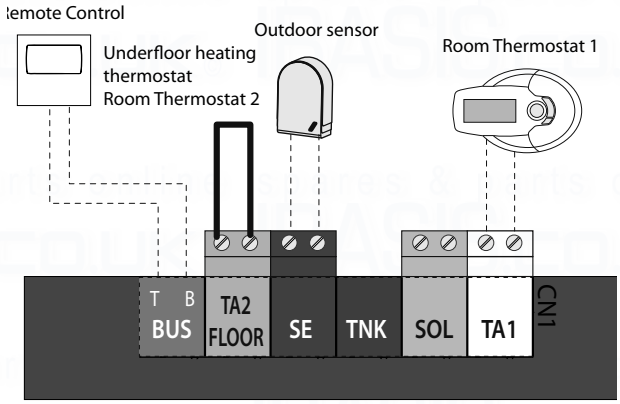

Room Thermostat / Remote Clock Connection

To connect a room thermostat, it is necessary to:

1. Open the control panel
2. Loosen the cable clamp using a screwdriver and insert the wires leading from the room thermostat
3. Connect the wires to the terminals as indicated in the figure below, removing the link
4. If a remote time clock is to be fitted, using a volt free switching time clock connect the switching wires from the time clock following points 1 - 3 above
5. If using an external time clock and room thermostat, these must be connected in series as shown in diagram C,
6. Ensure that they are well connected and not subject to stress when the control panel is closed

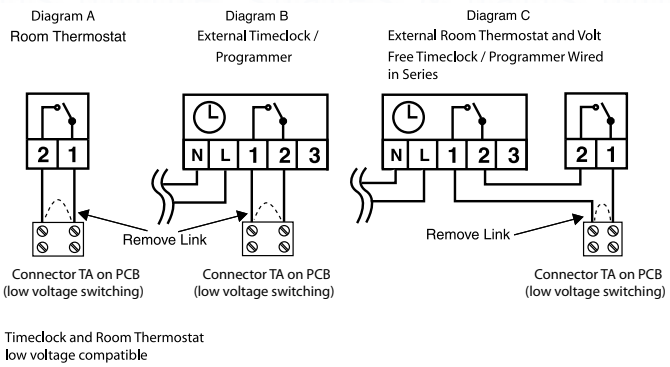

DO NOT CONNECT 240V TO ANY PERIPHERAL CONNECTIONS

Outdoor sensor connection

- Introduce the outdoor sensor wires
- Loosen the cable clamp using a screwdriver and insert the wires leading from the outdoor sensor one at a time.
- Connect the wires to the terminals as indicated in the figure below;
- Make sure that they are well connected and that they are not subject to stress when the control panel lid is opened or closed;
- Close the flap again, then replace the control panel cover and the front casing.
- Refer to page 39 for setting the parameters when using the outdoor sensor.

Outdoor Sensor

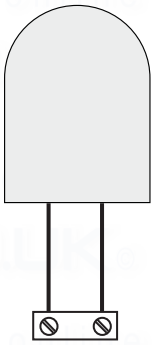

Connector SE on PCB **(see p.25)**

NOTE: **WHEN CONNECTING THE BOILER TO EXTERNAL CONTROLS, DO NOT RUN 240V CABLES AND CABLES FOR SWITCHING CIRCUITS (WHICH ARE LOW VOLTAGE) TOGETHER, USE SEPERATE CABLES TO PREVENT INDUCED VOLTAGE ON THE LOW VOLTAGE CIRCUITS.**

Cylinder connection (CLAS HE EVO SYSTEM)

The boiler can be connected to a central heating system that uses two zone valves to allow connection to an indirect storage cylinder.
There are two wiring diagrams shown, one for the connection to an Unvented Cylinder and one for connection to an open vented cylinder.
In both cases the boiler connection is shown as TA1.

When connecting the boiler to an external cylinder do not run 240V cables and the cables for the TA1 together, use separate cables to prevent induced voltage on the low voltage switching circuit.

NOTE: **THE USE OF A 'Y' PLAN SYSTEM IS NOT POSSIBLE WITH THE CLAS HE SYSTEM BOILER DUE TO THE LOW VOLTAGE SWITCHING OF THE APPLIANCE UNLESS SUITABLE RELAY CONTROLS ARE USED.**

Important!!
Ensure that a balancing valve is fitted on the cylinder return and balanced correctly at commissioning stage.

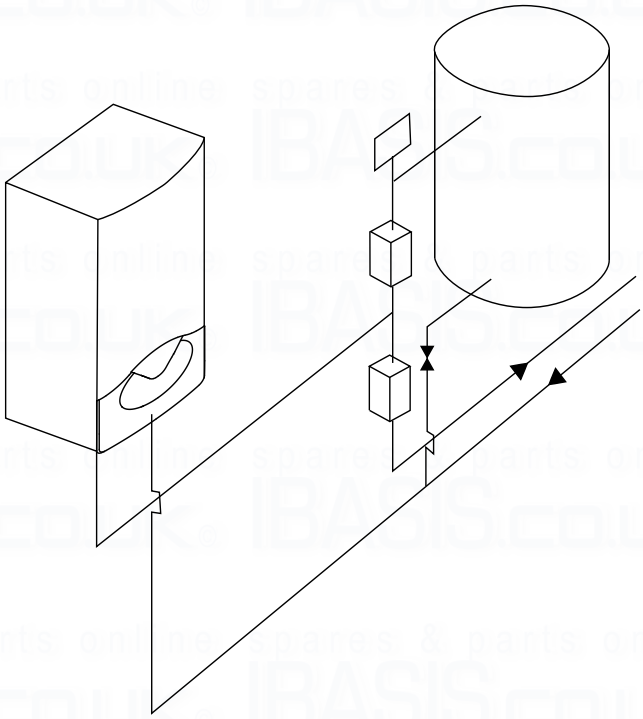

INSTALLATION

Fitting instructions for:

- **Internal mechanical time clock**
- **Internal RF receiver for Ariston programmable room thermostat**

These instructions to be used in conjunction with the appliance installation instructions. Ensure the appliance is electrically isolated before working on the appliance.
Remove the outer casing, and remove the front control panel by removing the 2 securing screws.
Remove the clock blanking plate (or existing clock if fitting the RF receiver in a product with an existing mechanical clock) from the front control panel of the boiler.
Using the 4 securing screws supplied with the clock accessory, secure the clock/RF receiver into position, ensuring the accessory is oriented correctly.
Connect the wires to the clock accessory using the spade connectors (see fig. 1 for wiring configuration)

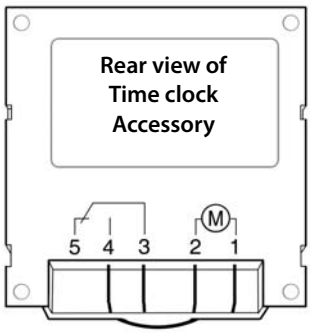

1	Red Wire
2	Double Black wire
3	Black wire
4	Spare terminal
5	Blue wire

Fig. 1

Reassemble appliance, turn on electrical supply and operate accessory using instructions supplied.

Electrical diagram
For increased safety, ask a qualified technician to perform a thorough check of the electrical system.

The manufacturer is not responsible for any damage caused by the lack of a suitable earthing system or by the malfunctioning of the electricity mains supply.

CLAS HE EVO

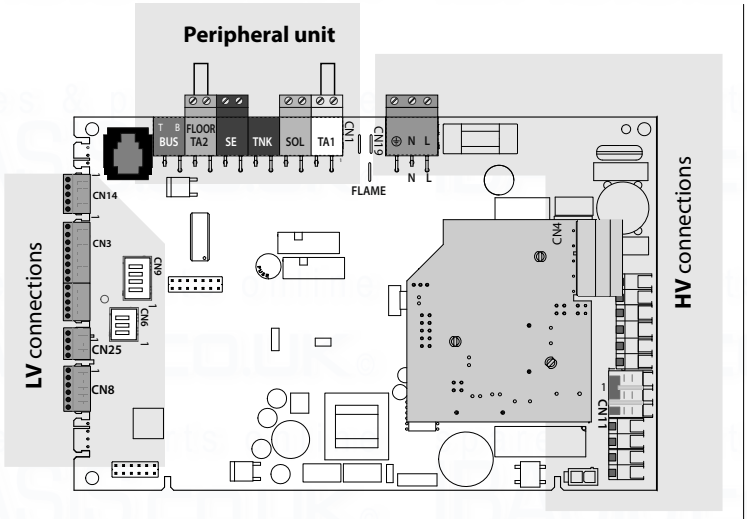

Peripheral unit connection

BUS - Remote Control (modulating device)
TA2/FLOOR - Underfloor heating thermostat
Room Thermostat 2
SE - Outdoor Sensor
SOL - Solar temperature probe
TA1 - Room thermostat 1

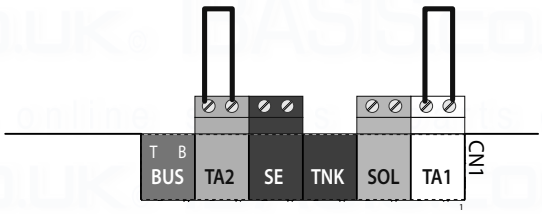

HV connection

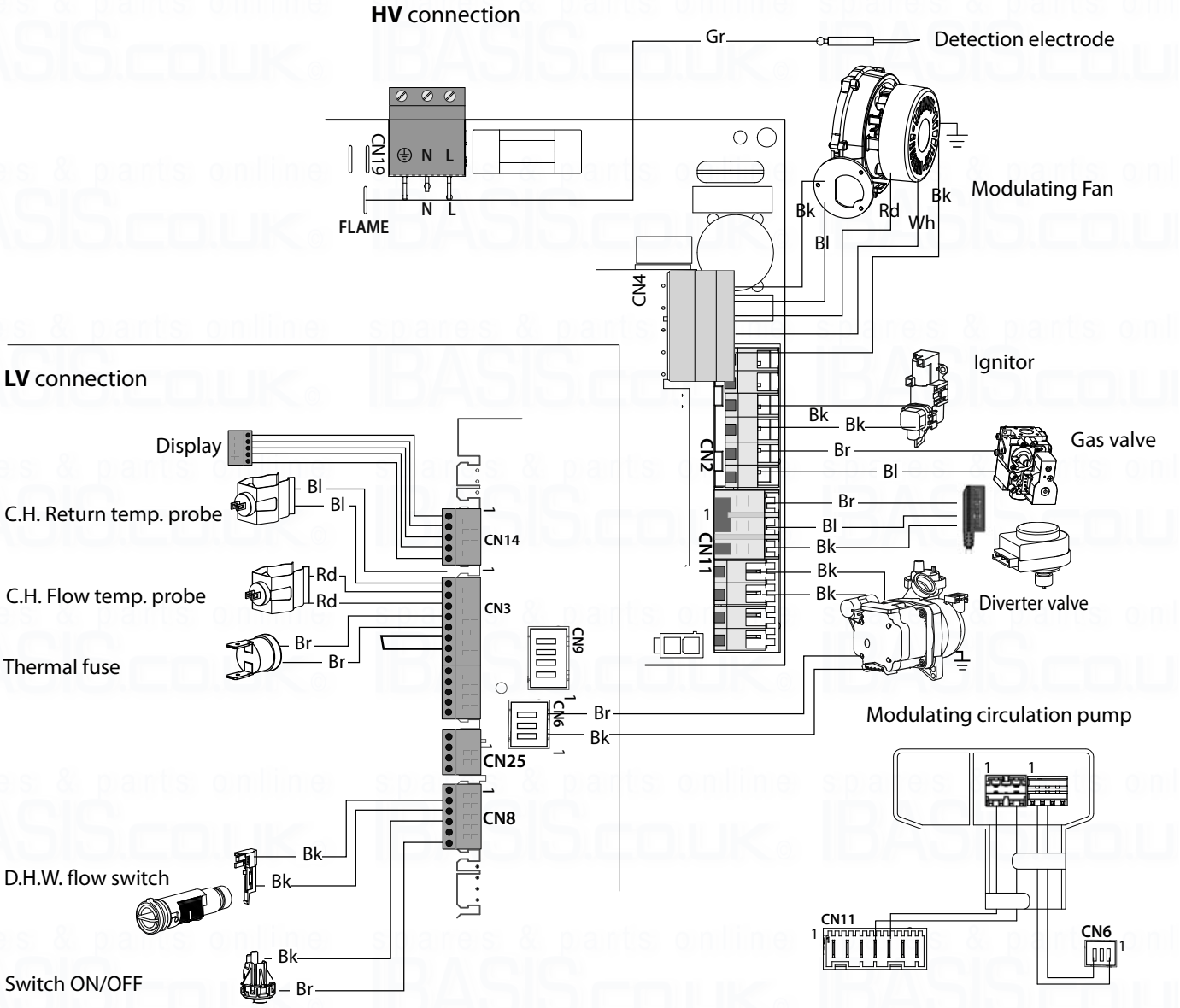

CLAS HE EVO SYSTEM

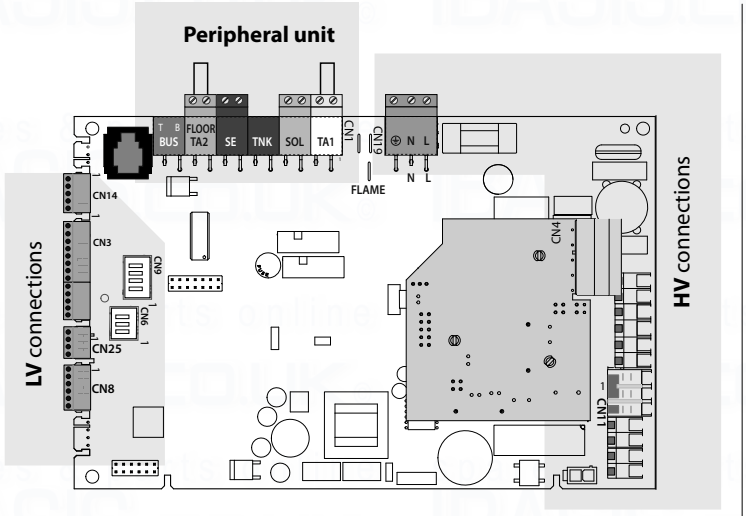

Peripheral unit connection

BUS - Remote Control (modulating device)
TA2/FLOOR - Underfloor heating thermostat
Room Thermostat 2
SE - Outdoor Sensor
SOL - Solar temperature probe
TA1 - Room thermostat 1

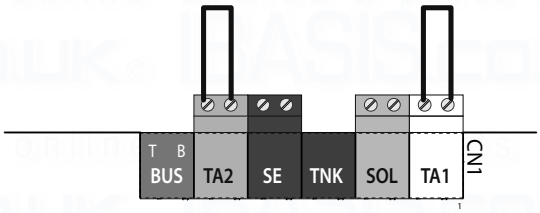

HV connection

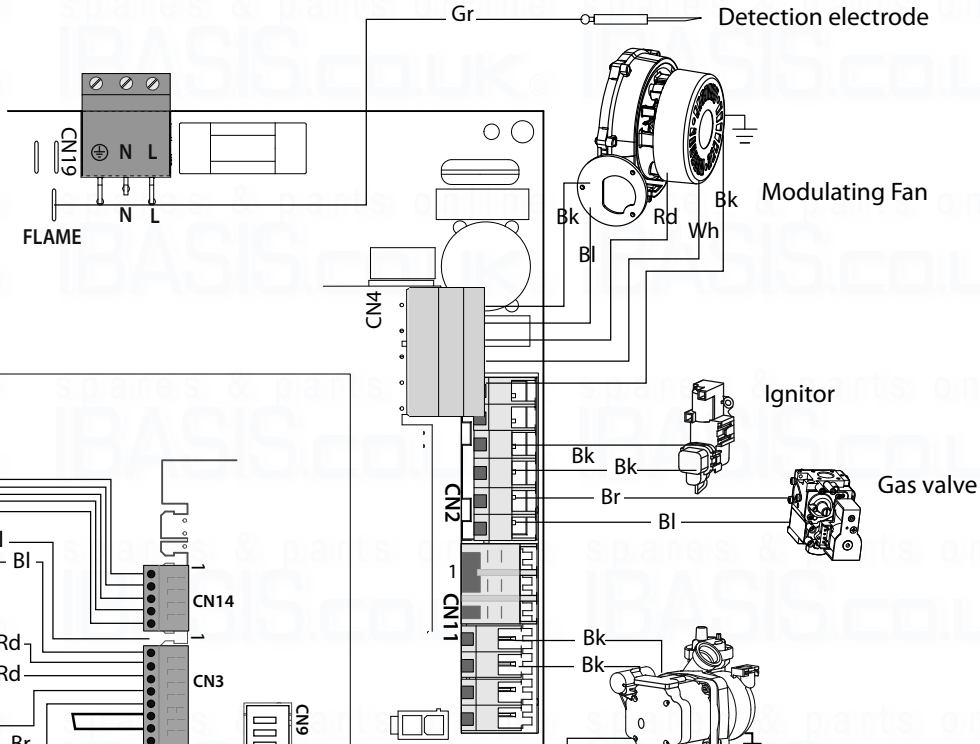

LV connection

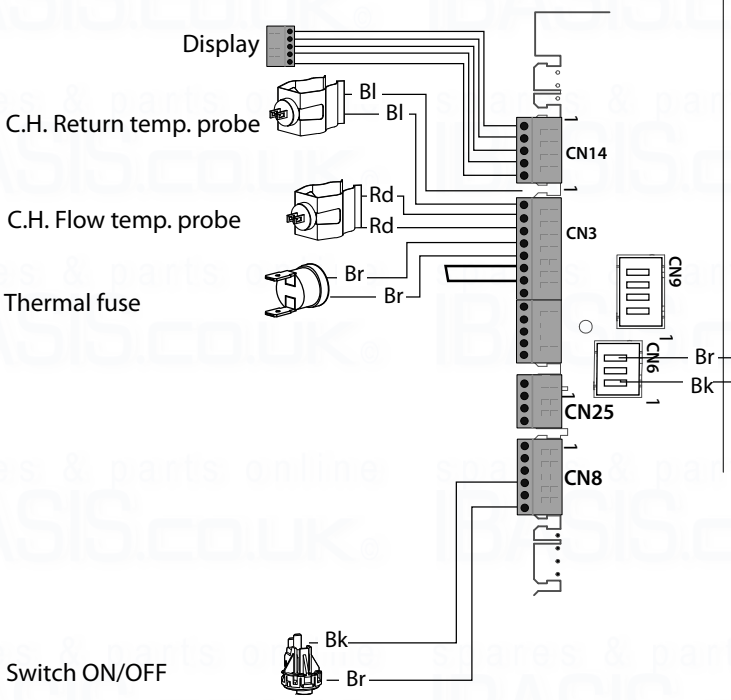

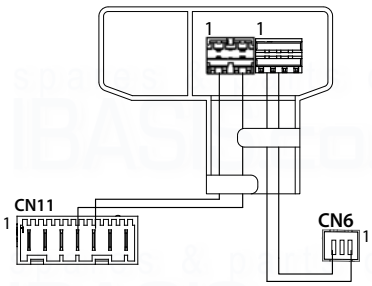

S plan wiring diagram.

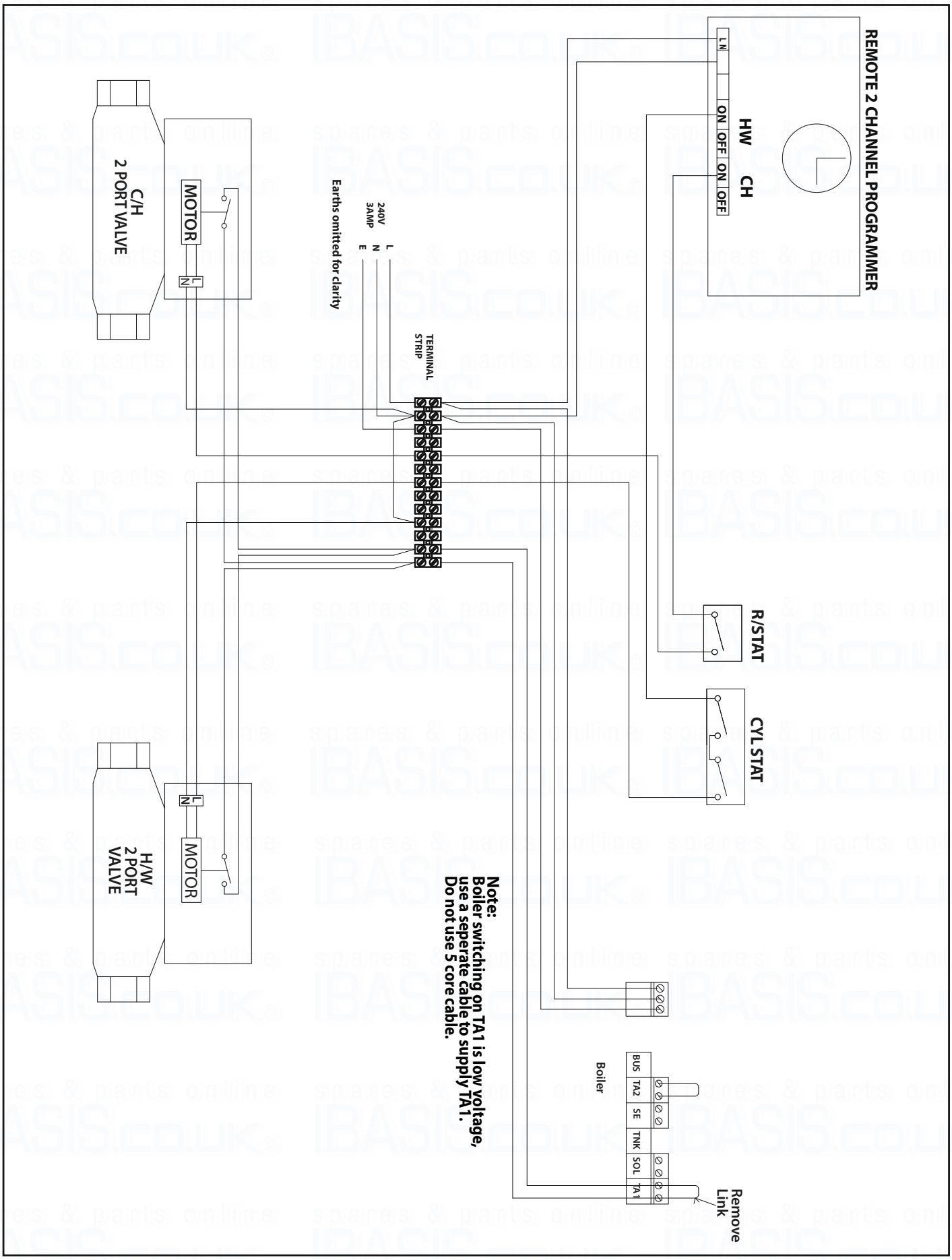

INSTALLATION

S plan wiring diagram using an outside sensor.

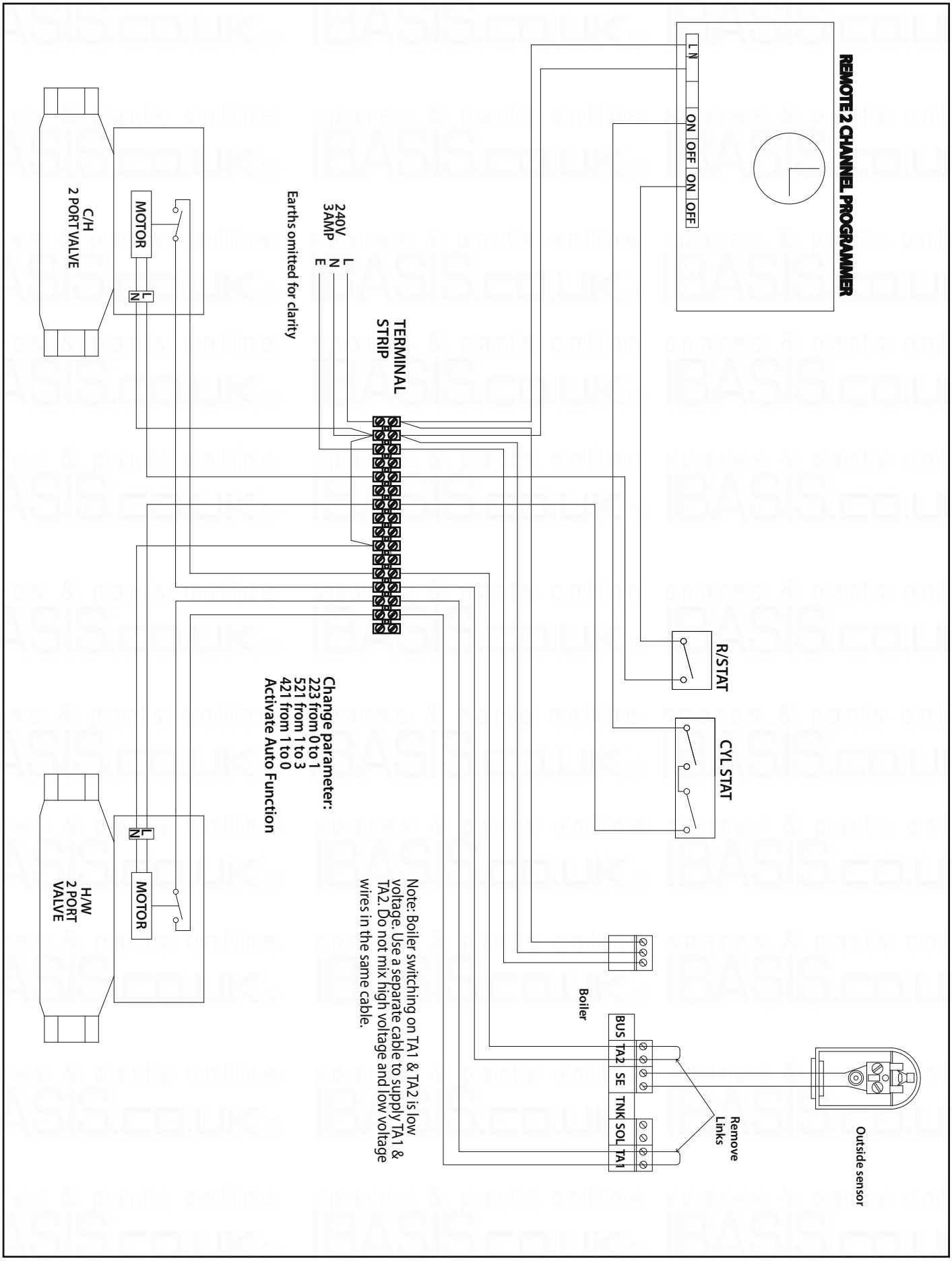

Initial preparation
Ariston Thermo UK Ltd support the benchmark initiative.
On pages pages 75 and 76 of this manual the Benchmark Commissioning Checklist and Service interval Record can be found. It is important that this is completed in the presence of your customer, they are shown how to use it, and it is signed by them. Please instruct your customer that they must have this manual with them whenever they contact a service engineer or us.

Preliminary electrical system checks to ensure electrical safety must be carried out by a competent person i.e. polarity, earth continuity, resistance to earth and short circuit.

Electricity supply
- Check that the voltage and frequency of the electricity supply correspond to the data shown on the boiler data plate;
- Make sure that the earthing connection is efficient.

Filling the Heating System:
Remove the front casing panel and lower the control panel as described on page 15).
Open the central heating flow and return cocks supplied with the connection kit;
Lift the cap on the automatic air release valve and leave open permanently;
Close all air release valves on the central heating system;
Gradually open the valves at the filling point (filling loop) until water is heard to flow, do not open fully;
Open each air release tap starting with the lowest point and close them only when clear water free of air is visible;
Purge the air from the pump by unscrewing the pump plug anti-clockwise, also manually rotate the pump shaft in the direction indicated by the pump label to ensure the pump is free;
Refit the pump plug;
Continue filling the system until at least 1.5 bar registers on the pressure gauge;
Inspect the system for water tightness and remedy any leaks discovered.

Important!
Manually vent the heat exchanger at the manual air vent. Failure to vent adequately may damage the heat exchanger (page 7, legend 2).

Filling of the DHW System:
Close all hot water draw off taps;
Open the cold water inlet cock supplied with the connection kit;
Slowly open each draw off tap and close them only when clear water, free of bubbles, is visible.

Gas Supply:
Inspect the entire installation including the gas meter and test for tightness. The entire installation should be in accordance with the relevant standards. In GB this is BS 6891 and in IE this is the current edition of I.S.813.

The connection on the the appliance is a 15mm (22mm on 38Kw) nut and olive located at the rear of the gas service cock.

If the gas supply serves other appliances, ensure that an adequate supply is available both to the boiler and the other appliances when they are in use at the same time.

Pipe work must be of an adequate size. The final pipe size must not be smaller than the appliance inlet size.

Open the gas cock (supplied with the connection kit) to the appliance and check the gas connection on the appliance for leaks.

Water Treatment:
The boiler is equipped with a stainless steel heat exchanger.
The detailed recommendations for water treatment are given in BS 7593:2006 (Treatment of water in domestic hot water central heating systems); the following notes are given for general guidance;

If the boiler is installed on an existing system, any unsuitable additives must be removed;

Under no circumstances should the boiler be fired before the system has been thoroughly flushed; the flushing procedure must be in line with BS7593:1992.

Firstly fill the central heating system with the power off, and flush through cold, fill the central heating system again, adding a flushing detergent, run the boiler on central heating until it reaches its operating temperature and flush the system, refill the system with a suitable corrosion inhibitor,

Note: Failure to carry out the flushing procedure will result in the warranty becoming void.

FIRST IGNITION OPERATION

Date .....

Installer .....

1. Check the electrical supply.

Complete .....

2. Check the type of gas and change the gas if necessary.

Complete .....

3. Check the gas tightness.

Complete .....

4. Measure the gas inlet.

Complete .....

5. Check the Flue

Complete .....

6. Fill the installation.

Complete .....

7. Check the hydraulic water tightness.

Complete .....

8. Ensure the pump is operating.

Complete .....

9. Purge the air with once pressing on ESC button during 5 sec.

Complete .....

10. Set the heating power.

Complete .....

11. Balance the central heating circuit.

Complete .....

12. Check the operation in DHW mode.

Complete .....

13. Adjust DHW flow rate on the boiler (if necessary).

Complete .....

14. Check combustion by pressing the RESET button for 5 sec.

Complete .....

15. Check gas rate.

Complete .....

16. Check the ionisation current.

Complete .....

17. Explain to the end user the working of the boiler.

Complete .....

Ignition procedure

Press the ON/OFF button on the control panel to switch on the boiler. The display shows:

- the operating mode:

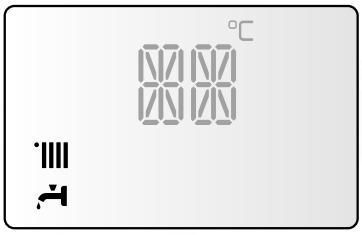

winter

summer

Only heating - CLAS HE EVO SYSTEM

- The figures indicate:
  - the flow temperature when no heating requests have been made
  - the flow temperature in central heating mode
  - the temperature of the hot water set in domestic hot water

The carrying out of certain functions is shown:

Deaeration cycle started	PURGE
Centrl Heating Post-circulation	70
D.H.W. circuit Post-circulation	42

Electricity supply

- Check that the voltage and frequency of the electricity supply correspond to the data shown on the boiler data plate;
- Make sure that the earthing connection is efficient.

First ignition

1. Make sure that:

- The gas valve is closed;
- The electrical connection has been properly carried out. Make sure that, in any case, the green/yellow earthing wire is connected to an efficient earthing system;
- Use a screwdriver to lift the cap on the automatic air relief valve;
- Switch on the boiler (by pressing the ON/OFF button) and use the Mode button to select the standby mode, where no hot water or heating requests are made.

- Start the deaeration cycle by pressing ESC for 5 seconds
  The boiler will start a deaeration cycle lasting about 7 minutes (See below). If you need to stop it press Esc, alternatively it is possible to manually vent the heat exchanger.

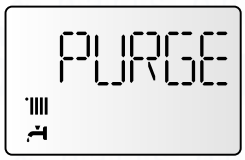

- At the end, check that the system is completely deaerated and, if not, repeat the procedure.
- Bleed the air from the radiators;
- The exhaust duct for combustion products should be suitable and free from any obstructions;
- Any necessary ventilation inlets in the room should be open (type B installation).
- Check whether the condense trap contains water; if not, it must be refilled.
  N.B.: if the boiler will not be used for long periods, the trap should be filled before the boiler is started up again. It is dangerous not to refill the siphon as fumes may be released into the environment.

2. Open the gas cock and check the connection seals, including the boiler connection joints, making sure that the meter does not detect any passage of gas. Eliminate any leaks.

3. Start the boiler by selecting the heating or domestic hot water operation using the Mode button.

Description of Function

Deaeration cycle

During the filling stage or if there is excess air in the system, the deaeration cycle can be activated by holding the OK button for 5 seconds. The boiler will start a cycle which lasts approximately 7 minutes. When this is complete the menu screen will be restored. The cycle may either be repeated, if necessary, or stopped by pressing OK. Press the OK button until the normal display screen is restored. **If the cycle is stopped be sure to manually vent the appliance.**

Combustion checking procedure
The order of operations for this procedure must always be respected. Refer to Technical Bulletin 143 on Gas Safe Register website for further information on combustion analysis of domestic boilers.

Operation *1* - Supply pressure check
Loosen the screw **1** and insert the pressure gauge connection pipe into the pipe tap.
Switch the boiler on at maximum power.
To activate combustion test function:
- Press the mode selector to ensure the + icons displayed.
- Pres & hold the reset button for 10 seconds. 'Test' will appear on the screen. Ensure the boiler is on max power by rotating the encoder.

The supply pressure should correspond to the value established in relation to the type of gas ,for which the boiler is designed see Table summarising changes.
Note:
The absolute minimum working pressure measured at the inlet test nipple on the gas valve is 17.5mbar.

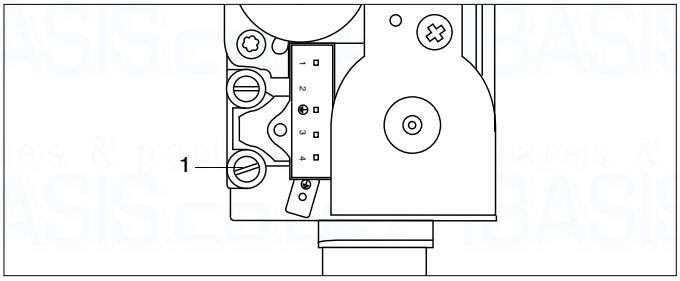

Operation 2 - Preparing the measuring equipment
Connect the calibrated flue gas analyser to the left-hand combustion outlet by unscrewing the screw and removing the blanking cover.

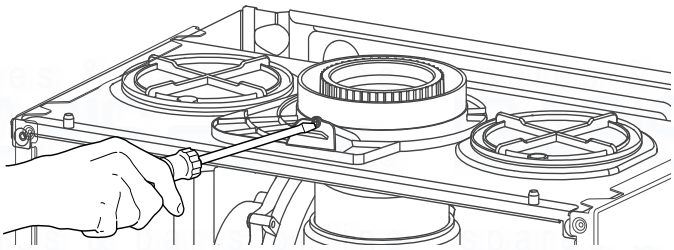

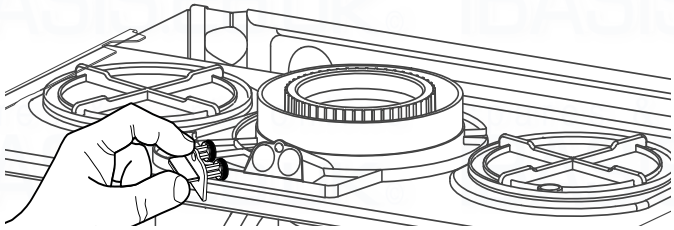

Operation 3 - Adjusting the CO2 at maximum gas flow rate (domestic hot water)
Draw off the domestic hot water at the maximum water flow rate (if a combi).
Select the Test function by pressing the RESET button for 10 seconds.
WARNING! When the cleaning function is activated, the temperature of the water coming out of the boiler may be more than 65°C.

On the display appear TEST and the icon . The boiler is foced to the maximum heating power.

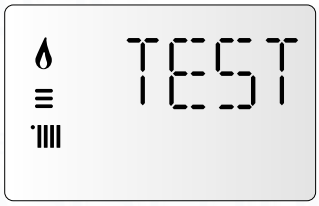

Rotate the encoder to forced the boiler at the maximum DHW power. On the display appear the icon .
Wait 1 minute for the boiler to stabilise before carrying out the combustion analyses.

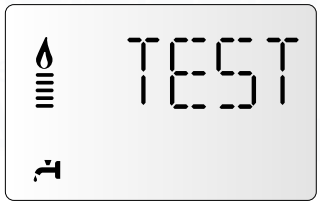

Read the CO2 value (%) and compare it with the values given in the table below
N.B.: values with the casing closed.

If the CO2 value (%) read differs from the values given in the table, then adjust the gas valve following the instructions below, otherwise move directly onto operation 4.

	18	24	30	38
Gas	**CO_2 (%)**			
G20	**9,0±0,2**			
G31	**10,0±0,2**			

Adjusting the gas valve at maximum gas flow
Adjust the gas valve by turning setting screw **4** clockwise in increments to reduce the CO2 level (a 1 turn adjusts the CO2 level by approximately 0.2%). Wait 1 minute after each change in setting for the CO2 value to stabilise.

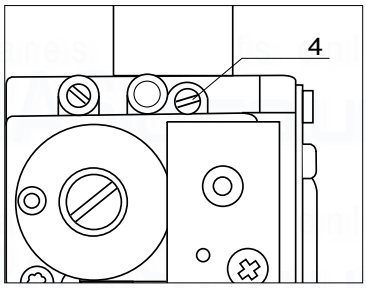

If the value measured corresponds to the value given in the table, max adjustment is complete, otherwise start the setting procedure again.
N.B. The Test function is automatically deactivated after 10 minutes or manually by briefly pressing the RESET button.

Operation 4 - Checking the CO2 at minimum gas flow

With the Test function active, rotate the encoder to select the icom and . The boiler is forced to the minimum power. Wait 1 minute for the boiler to stabilise before carrying out the combustion analyses.

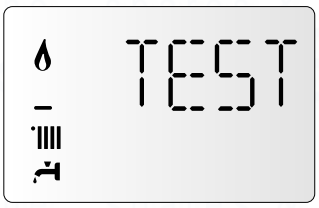

If the CO2 value (%) read differs by 0.5 % from the value found, then adjust the gas valve following the instructions below, otherwise move directly onto operation 5.

Adjusting the gas valve to minimum gas flow

Remove cap and adjust screw **2** by turning anti-clockwise in increments to reduce the CO2 level. Wait 1 minute after each adjustment for the CO2 value to stabilise.

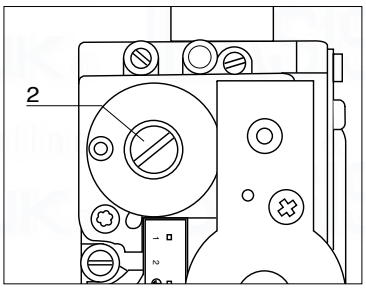

WARNING! this adjustment is sensitive: a rotation of a 1 turn corresponds to 0.2% of CO2.

If the value measured corresponds to the value given in the table, adjustment is complete, otherwise start the setting procedure again.

Attention! If the value of the CO2 at the minum power has been changed, it is necessary repet the adjusting at maximum gas flow.

Operation 5 - Ending the adjustment

Exit cleaning mode by pressing RESET.
Stop the draw-off.
Verify and repair any leaks of gas.
Refit the front panel to the device.
Refit the blanking cover at combustion test point.

menu 2 - Boiler parameters
submenu 3 - **parameter 1** Maximum Heating Power adjustment
submenu 2 - **parameter 0** Soft light Ignition
submenu 3 - **parameter 5** Heating ignition delay

Maximum Heating Power adjustment

The maximum heating power can be adjusted to between the maximum power allowed by the boiler and the minimum power). The display shows the value between 100% ("100" on the display) and 0% ("0") of this interval.
To check the maximum heating power, access menu 2/sub menu 3/ parameter 1, check the value and, if necessary, modify it as indicated in the Gas Regulation table below. (See page 40 for more details).

Checking slow ignition power

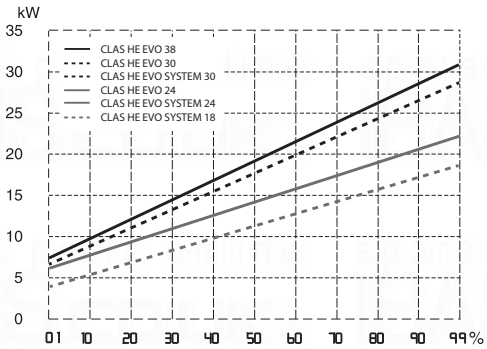

The soft light can be adjusted between the maximum power (shown on the display as "100", i.e. 100%) and the minimum power (shown on the display as "1", i.e. 1%).
To check the slow ignition power, access menu 2/sub menu 2/ parameter 0.

Heating ignition delay adjustment

This parameter – menu 2/sub menu 3/parameter 5 - can be used to manually (0) or automatically (1) set the delay time before the subsequent reignition of the burner after it has switched off on reaching the desired temperature in central heating mode.
By selecting manual, it is possible to set the delay in minutes using the successive parameter (menu 2/sub menu 3/parameter 6), to a time between 0 and 7 minutes.
Automatic selection means that the boiler will establish the delay time based on the set-point temperature

Converting the appliance from Natural gas to LPG

These appliances are designed to operate with different gas types.
The appliance must only be converted for use with a different gas type by a Gas Safe Registered installer.
To convert the appliance to LPG:
(use these instructions in conjunction with the Instruction sheet supplied with the LPG Kit).

1. Electrically isolate the appliance
2. Turn off the gas supply (fig 1)
3. Remove the outer case, lower the front control panel and remove the front combustion chamber panel.

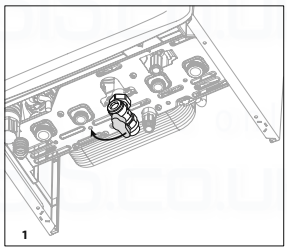

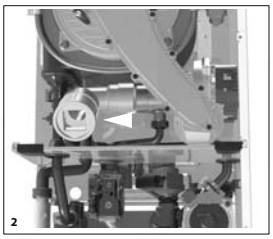

4. Remove the green silencer (fig 2)

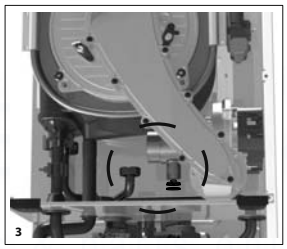

5. Disconnect the gas supply from the venturi assembly (fig 3)
6. Inset the correct diaphragm (depending on the output of the appliance) into the venturi spigot

7. Reassemble the gas supply onto the venture assembly (fig 4)
8. Turn on gas supply and test for tightness
9. Purge gas supply
10. Turn the electrical supply on to the appliance.
11. Commission the appliance, check the working pressure is adequate then test and adjust the CO^2 values at maximum and minimum output described in the commissioning section of the appliance installation instructions. Ensure the flue gas analyser used is calibrated and set for the gas group the appliance is being adjusted for.
12. Check the appliance for gas leaks using gas leak detection fluid.
13. Affix the label to the appliance that is supplied with the conversion kit.

Table summarising changes

		parameter	CLAS HE EVO							
			CLAS HE EVO SYSTEM							
			18		24		30		38	
			G20	G31	G20	G31	G20	G31	G20	G31
Lower Wobbe index (15°C, 1013 mbar) (MJ/m^3)			45,67	70,69	45,67	70,69	45,67	70,69	45,67	70,69
Slow ignition		220	55		55		60		60	
Minimum fan speed (%)		233	19		18		18		19	
Maximum central heating fan speed (%)		234	85		76		78		78	
Maximum D.H.W fan speed (%)		232	85		91		86		93	
Maximum heating power adjstment		231	55		55		60		60	
Gas valve restrictor (ø)			3.8	2.9	5.0	3.6	5.7	4.3	6.6	5.0
Gas flow max/min (15°C, 1013 mbar) (nat - m3/h) (GPL - kg/h)	max D.H.W		1.90	1.40	2.75	2.02	3.17	2.33	4.02	2.95
	max C.H		1.90	1.40	2.33	1.71	2.96	2.17	3.28	2.41
	min		0.48	0.35	0.58	0.43	0.69	0.50	0.79	0.58

AUTO function

This is a function which enables the boiler to automatically adapt its operation routine (the temperature of the heating elements) in line with the outdoor conditions, in order to achieve and maintain the requested room temperature conditions.
Depending on the peripheral units connected and the number of zones controlled, the boiler adjusts its flow temperature automatically.
The various corresponding parameters should therefore be set (see adjustments menu).
To activate the function, press the Auto button.

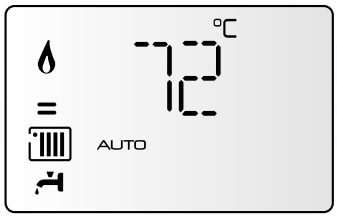

Example 1:
Single zone system (high-temperature) with on/off room Thermostat:
In this case the following parameters must be set:
4 21 - Activation of temperature adjustment using sensors
- Select 1 = Basic temperature adjustment
2 44 - Boost Time (optional)
The wait time for the flow temperature increase in steps of 4°C may be set. The value varies according to the type of system and installation.
If the Boost Time value = 00 the function is not activated.

Example 2:
Single zone system (high-temperature) with on/off room Thermostat + outdoor sensor:
In this case the following parameters must be set:
4 21 - Activation of temperature adjustment using sensors
- Select 3 = outdoor sensor only
4 22 - Temperature adjustment curve selection
- Select the relevant curve according to the type of system, installation, heat insulation used in the building, etc.
4 23 - Perform a parallel curve shift if necessary, increasing or decreasing the set-point temperature (this may also be modified by the user, using the heating temperature adjustment knob, which, with the Auto function activated, is used to shift the curve in a parallel manner).

Example 3:
Single zone system (high-temperature) with Sensys controller + outdoor sensor
In this case the following parameters must be set:
4 21 - Activation of temperature adjustment using sensors
- select 4 = outdoor sensor + room sensor
4 22 - Temperature adjustment curve selection
- Select the relevant curve according to the type of system, installation, heat insulation used in the building, etc
4 23 - Perform a parallel curve shift if necessary, increasing or decreasing the set-point temperature. (This may also be changed by the user by the encoder which, with the Auto function activated, is used to shift the curve in a parallel manner.)
4 24 - Influence of room sensor
- used to adjust the influence the room temperature has on the calculation of the set-point flow temperature (20 = maximum, 0 = minimum).

Note: See page 39 for details on accessing menus.

Boiler protection devices

The boiler is protected from malfunctioning by means of internal checks performed by the electronic microprocessor P.C.B., which stops the boiler from operating if necessary.
In the event of the boiler being shut off in this manner, a code appears on the display which refers to the type of shut-off and the reason behind it.
There are two types of shut-off:

Safety shut-off

This type of error is "volatile", which means that the boiler starts up again automatically as soon as the problem which caused the shut-off is removed; the error is indicated by the «Err» symbol which appears on the display and the error code.
In fact, soon as the cause of the shut-off disappears, the boiler starts up again and continues to operate normally.

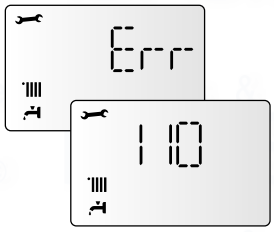

In the event of error **1 08** - **Shut-off due to insufficient water pressure** inside the heating circuit - the boiler will perform a safety shut-off.
You can increase the pressure by filling the heating circuit.
In this case or if the re-balancing request is performed on a frequent basis, switch the boiler off, turn the external electric switch to the OFF position, shut off the gas cock and contact a qualified technician to check for any leaks of water.

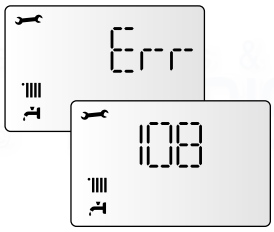

Shutdown

This type of error is "non-volatile", which means that it is not removed automatically. To restore normal operation press the **Reset** button on the control panel.

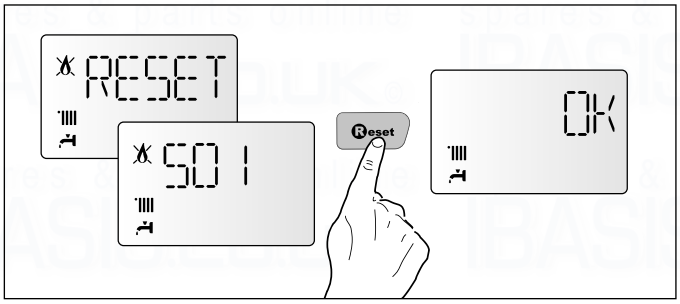

Malfunction warning

This warning is shown by the display in the following format:
5 P1 = FIRST IGNITION ATTEMPT UNSUCCESSFUL
the first figure indicating the operational assembly is followed by a P (warning) and the code relating to the specific warning.

Important

If this shutdown occurs frequently, contact an authorised Technical Service Centre for assistance. For safety reasons, the boiler will permit a maximum of 5 resets in 15 minutes (5 presses of the RESET button); at the 6th attempt within this 15-minute period the boiler will shut down and may only be operated again after the electricity supply has been disconnected. If the shutdown is occasional or an isolated event, this is not a problem.

The first figure of the error code (e.g. 1 01) indicates within which operational assembly the error occurred.
1 - Primary Circuit
2 - Domestic Hot Water Circuit
3 - Internal Electronic Part
4 - External Electronic Part
5 - Ignition and Detection
6 - Air inlet - flue gas outlet
7 - Multi-zone Heating

Table summarising error codes

Central Heating circuit		
Display	Description	
1 01	Overheat	
1 02	Pressure Sens Error	
1 03	Insufficient circulation	
1 04		
1 05		
1 06		
1 07		
1 08	Insufficient water (request filling)	
1 10	C.H. Flow temp. probe circuit open / short circuit	
1 12	C.H. Return temp. probe circuit open / short circuit	
1 14	External sensor circuit open / short circuit	
1 16	Floor Thermostat contact open	
1 18	Heating delevery probe problem	
1 P1	Insufficient circulation indication	
1 P2		
1 P3		
D.H.W. circuit		
2 02	Bottom storage temperature probe open / short circuit	Solar kit (optional)
2 04	Solar collector temperature probe open / short circuit	
2 07	Solar collector overheating	
2 08	Collector frost protection temperature	
Internal P.C.B.'s		
3 01	EEPROM error	
3 02	Comunication error	
3 03	Main P.C.B. error	
3 04	Too many (> 5) resets in 15 minutes	
3 05	Main P.C.B. error	
3 06	Main P.C.B. error	
3 07	Main P.C.B. error	
External P.C.B.'s		
4 07	Room sensor circuit open/short circuit	
Ignition and Detecion		
5 01	No flame detected	
5 02	Flame detected with gas valve closed	
5 04	Flame lift	
5 P1	1st Ignition Failed	
5 P2	2nd Ignition Failed	
5 P3	Flame cut-off	
Air Inlet / Flue gas outlet		
6 04	Insufficient fan speed	
6 10	Thermofuse open	
6 12	Incorrect measurement of fan speed	

Multi-zone Heating (Heating Zone Modules - optional)	
701	Zone 2 outgoing sensor defective
702	Zone 2 return sensor defective
703	Zone 3 outgoing sensor defective
704	Zone 3 return sensor defective
705	Hydraulic separation sensor defective
706	Zone 2 overheating
707	Zone 3 overheating

Anti-frost Device.

The anti-frost function acts on the central heating flow temperature probe, independently from other regulations, when the electrical supply is turned on.

If the primary circuit temperature is between 3°C and 8°C the pump will run (with the diverter valve switching between central heating and hot water every 1 minute) until the temperature reaches > 9°C.

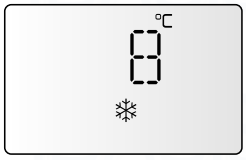

If the flow temperature remains between 3°C and 8°C the pump will continue to run for a maximum of 20 minutes unless a temperature above > 9°C is detected in the central heating flow, after this the the burner will fire (heating position) until a temperature of > 30°C is detected.

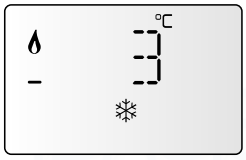

If the central heating flow temperature is < 3°C, the burner will fire (heating position) at minimum power until the temperature reaches > 30°C, the burner will go out.

If lockout is caused by overheat the burner will not fire but the pump will continue to run (heating position).

The anti-frost device activates only when (with the boiler operating correctly):

- the system pressure is correct;
- the boiler is electrically powered;
- there is a supply of gas.

Accessing the settings - adjustment - problem identification menus

The boiler can be used to manage the heating and domestic hot water production system in its entirety.
Navigation within the menus enables the boiler system + connected peripheral units to be customised, optimising operation for maximum comfort and maximum saving. It also provides important information relating to the efficient operation of the boiler.

Before access to the menus, the display show some "quick settings" to have direct access to the parameters.
To see all available parameters and menu access to view FULL MENU.

GAS - Direct access to the parameters:
220 - 231- 232- 233 - 234 - 270

SET - Direct access to the parameters:
220 - 231- 223 - 245 - 246

PCB - Direct access to the parameters:
220 - 228 - 229 - 231- 232- 233 - 234 - 247 - 250 - 253

VIS - Direct access to the parameters:
821 - 822 - 824 - 825 - 827 - 830 - 831 - 832 - 833- 840 - 835

ZONE - Direct access to the parameters:
402 - 502 - 602 - 420 - 520 - 620 -434 - 534 - 634 - 830

FULL MENU - *see table on following pages*

- **0 NETWORK**
  - 0 4 User Interface
- **2 Boiler Parameter**
  - 2 0 General setting
  - 2 2 General setting
  - 2 3 C.H. Parameters - Part 1
  - 2 4 C.H. Parameters - Part 2
  - 2 5 Domestic Hot Water
  - 2 6 Boiler manual settings
  - 2 7 Test & Utilities
  - 2 8 Menù 2 Reset to factory setting
- **4 Zone 1 Parameters**
  - 4 0 Set-point Zone1
  - 4 2 Zone 1 Setting
  - 4 3 Diagnostics
- **5 Parametri Zona 2**
  - 5 0 Set-point Zone2
  - 5 2 Zone 2 Setting
  - 5 3 Diagnostics
- **6 Parametri Zona 3**
  - 6 0 Set-point Zone3
  - 6 2 Zone 3 Setting
  - 6 3 Diagnostics
- **8 Service Parameter**
  - 8 1 Statistics
  - 8 2 Boiler
  - 8 3 Boiler Temperature
  - 8 4 Solar & Storage
  - 8 5 Service
  - 8 6 Error History

The parameters relating to each individual menu are listed in the following pages.
The various parameters can be accessed and modified using the OK button and the encoder (see fig. below).
The description of the menus and of each individual parameter will be shown on the display.

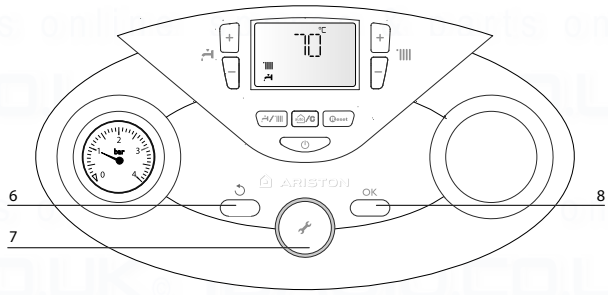

6. Esc button
7. "encoder" *programming knob*
8. Ok button *programming key*

To access the Menus, proceed as follows (for example: "231":

1. Simultaneously press the ESC button and OK button for 5 seconds; the display show CODE and 222.
   Caution! The menus reserved for qualified technicians may only be accessed after setting the access code.
2. Turn the encoder in a clockwise direction to select code 234
3. Press the OK button; the display show the first "quick setting" GAS
4. Turn the encoder to select MENU;
5. Press the OK button; the dispaly show the menu 0.
6. Turn the encoder in a clockwise direction to select the menu 2
7. Press the OK button to access to the menu. The display show the sub-menu 20
8. Turn the encoder to select a sub menu 23;
9. Press the OK button to access the sub menu parameters; the display show 230
10. Turn the encoder to select a parameter 231
11. Press the OK button to access the parameter; the display will indicate the value, e.g "70".
    Note: The parameter value will be displayed for 20 seconds, then will begin to flash in alternation with the parameter, e.g. "70 > 231".
12. Turn the encoder to select the new value, e.g. "75".
13. Press OK button to save the change or press Esc to exit without saving.

To exit, press the Esc button until the normal display screen is restored.
For menus which do not require the access code, it is possible to pass directly from the menu to the sub menu.

menu	sub-menu	Parameter	Description	value	default setting	
SERVICE CODE						
			Rotate encoder clockwise to select code 234 and press OK. Turn the encoder to select MENU and press OK button			
0	**NETWORK**					
0	**4**	**DISPLAY SETTING**				
0	**4**	**0**	Zone to be set by display	1 = 1 Zone 2 = 2 Zone 3 = 3 Zone	**1**	
0	**4**	**1**	Backlight timing	from 0 to 10 (minutes) or 24 (hour)	24	
0	**4**	**2**	Thermoregulation button deactivation	0 = OFF 1 = ON	0	
2	**BOILER PARAMETER SETTING**					
2	**0**	**GENERAL**				
2	**0**	**0**	DHW Setpoint Temperature	from 36 to 60 (°C)		*Setting by DHW button 1*
2	**2**	**BOILER GENERAL SETTINGS**				
2	**2**	**0**	Soft ignition	from 0 to 90	60	*See parag. Gas settings*
2	**2**	**3**	Underfloor thermostat or zone 2 ambient thermostat selection	0 = Floor safety thermostat 1 = Zone 2 ambient thermostat	0	
2	**2**	**4**	Thermoregulation	0 = Absent 1 = Present	0	
2	**2**	**5**	Heating ignition delay	0 = Deactivated 1 = 10 seconds 2 = 90 seconds 3 = 210 seconds	0	
2	**2**	**8**	Boiler Version - **CLAS HE EVO** CANNOT BE MODIFIED	from 0 to 5	0	*RESERVED FOR TECHNICAL ASSISTANCE* *Only if the PCB is changed*
			Boiler Version - **CLAS HE EVO SYSTEM** CANNOT BE MODIFIED	from 0 to 5	2	
2	**2**	**9**	Set boiler heat power			
2	**3**	**BOILER PARAMETER - PART 1**				
2	**3**	**1**	Maximum heating power setting	from 0 to 99	60	*see the "Gas setting" table, information on Starting*
2	**3**	**2**	Domestic hot water maximum percentage CANNOT BE MODIFIED	from 0 to 99		*RESERVED FOR TECHNICAL ASSISTANCE* *Only if the gas or PCB is changed* *see "gas setting" table*
2	**3**	**3**	Minimum percentage CANNOT BE MODIFIED	from 0 to 99		
2	**3**	**4**	Heating maximum percentage CANNOT BE MODIFIED	from 0 to 99		
2	**3**	**5**	Selection of ignition delay type when heating	0 = Manual 1 = Automatic	1	
2	**3**	**6**	Ignition delay when heating timer setting	from 0 to 7 (minutes)	3	
2	**3**	**7**	Post-circulation when heating	from 0 to 15 minutes or OC (AC)	3	
2	**3**	**8**	<Not Available>			
2	**3**	**9**	<Not Available>			
2	**4**	**BOILER PARAMETER - PART 2**				
2	**4**	**3**	Post-ventilation after heating request	0 = OFF 1 = ON	0	
2	**4**	**4**	Time delay after heating temperature increase	from 0 to 60 (minutes)	16	*Activated only with thermostat On/ Off and heating control activated (parameter 421 - 521 - 621 = 01)*
			This parameter allows the time delay to be set before automatic increase of the flow temperature calculated in increments of 4°C (max 12°C). If this parameter retains the value 00, this function is not active.			

menu	sub-menu	Parameter	Description	value	default setting	
2	4	5	Circulation pump MAX speed	from 75 to 100		
2	4	6	Circulation pump MIN speed	from 40 to 100		
2	4	7	Device indicator for heating circuit pressure	0 = temperature sensor only 1 = pressure switch at minimum 2 = pressure sensor	1	*RESERVED FOR TECHNICAL ASSISTANCE* Only if the PCB is changed
2	4	8	<Not Available>			
2	4	9	External temperatura correction	from -3 to +3 (°C)	0	Only active with external sensor connected
2	5	**DOMESTIC HOT WATER PARAMETER**				
2	5	0	COMFORT function CLAS HE EVO	0 = deactivated 1 = timed 2 = always on	0	*Timer = activated for 30 minutes after domestic hot water draw-off*
			The appliance allows the hot water heating comfort to be increased via the "COMFORT" function. *This function keeps the secondary exchanger temperature stable when the boiler is not in use.* *When the function is active, the display shows COMFORT* *Note: this function can be activated and deactivated by pressing the COMFORT button*			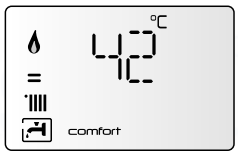
2	5	1	Comfort Anti-cycling Time CLAS HE EVO	from 0 to 120 (minutes)	0	
2	5	2	Hot water flow delay CLAS HE EVO	from 5 to 200 (0.5 to 20 seconds)	5	*Anti "water hammering"*
2	5	3	Extinction of the burner in D. H. W. CLAS HE EVO	0 = anti-scale (stop at > 67°C) 1 = + 4°C /setting	0	
2	5	4	Post-circulation and post-ventilation after a domestic hot water draw-off	0 = OFF 1 = ON	0	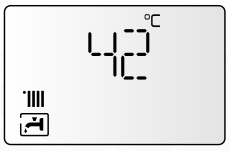
			OFF = 3 minutes post-circulation and post-ventilation after domestic hot water draw-off if the boiler temperature measured requires it. *ON = always on for 3 minutes post-circulation and post-ventilation after domestic hot water draw-off.*			
2	5	5	Domestic hot water timer	from 0 to 30 (minutes)	0	
2	5	7	<Not Available>			
2	5	8	<Not Available>			
2	6	**BOILER MANUAL SETTINGS**				*Only to test components*
2	6	0	Manual mode activation	0 = OFF 1 = ON	0	
2	6	1	Boiler pump control	0 = OFF 1 = ON	0	Set parameter 260=1
2	6	2	Fan control	0 = OFF 1 = ON	0	Set parameter 260=1
2	6	3	3 way valve control	0 = Sanitary 1 = Heating	0	Set parameter 260=1
2	6	4	<Not Available>			
2	7	**TEST & UTILITIES**				
2	7	0	Test mode	TEST+ = Max Heating power TEST+ = Max DHW power TEST+ = Minimum power.		*activation can also be obtained by pressing the **Reset** button for 10 seconds. The function is deactivated after 30 minutes or by pressing **Reset***
2	7	1	Bleed cycle	press **OK** button for 5 seconds		*see First Ignition parag.*
2	8	**RESET MENU' 2**				
2	8	0	Automatically resetting to the default setting in menu 2	Reset OK = yes ESC = no		*To reset all default parameter settings, press the OK button*

menu	sub-menu	Parameter	Description	value	default setting	
4	**ZONE 1 PARAMETER**					
4	**0**	**ZONE 1 TEMPERATURE SETTING**				
4	**0**	**2**	Heating fixed temperature setting "Heating fixed temp"	from 35 to 82 °C (high temperature - para. 420 =1)	70	*Activated only with temperature control and fixed temperature (see 421)*
				from 20 to 45 °C (high temperature - para. 420 =0)	20	
4	**2**	**ZONE 1 SETTING**				
4	**2**	**0**	Heating appliance temperature value setting	0 = from 20 to 45°C (low temperature) 1 = from 35 to 85°C (high temperature)		select in the appliance type base
4	**2**	**1**	Basic heating control type selection type depending on the peripheral devices connected	0 = fixed flow temperature 1 = device On/Off 2 = room sensor 3 = external sensor only 4 = room sensor + external sensor	1	To activate heating control, press the AUTO button. The display lights up the AUTO symbol
						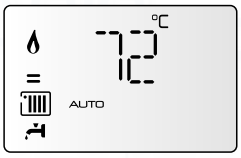
4	**2**	**2**	Slope	from 0_2 to 0_8		(low temperature)
				from 1_0 to 3_5	1_5	(high temperature)
			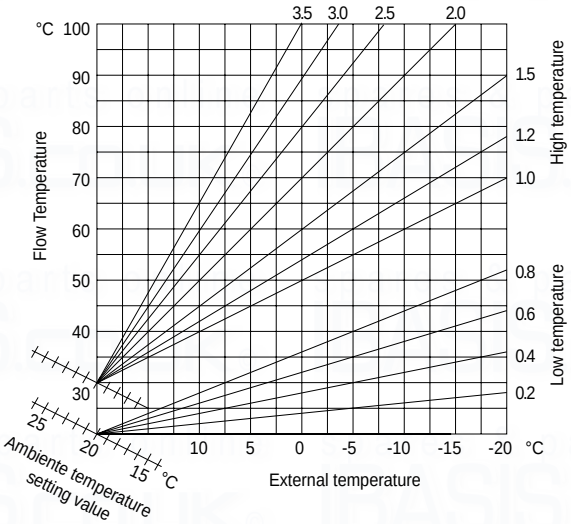			*If the external sensor is used, the boiler calculates the most suitable heating flow temperature taking the external temperature and the type of appliance into account.* *The type of curve must be chosen according to the type of appliance radiator and the heat losses present in the building.*
4	**2**	**3**	Parallel shift	from - 7 to + 7 (low temperature)	0	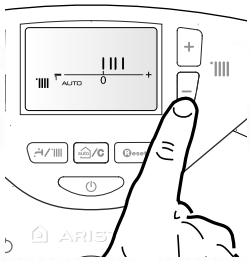
				from - 14 to + 14 (high temperature)		
			To adapt the thermal curve to the appliance requirements, it is possible to perform a parallel shift of the curve in order to alter the calculated flow temperature and therefore the ambient temperature. *By accessing this parameter or pressing the buttons 12 the curve can be shifted in a parallel manner as indicated in the figure shown below.* *The value is indicated on the display:* - *from -7 to +7* (low temperature) - *from -14 to +14* (high temperature) *Each step represents a flow temperature increase/decrease of 1°C in relation to the set-point value.*			
4	**2**	**4**	Compensation	from 0 to 20	20	
			if setting = 0, the temperature taken from the ambient sensor does not affect the calculation of the setting. If setting = 20, the temperature taken has maximum influence on the setting.			
4	**2**	**5**	Zone 1 heating MAXIMUM temperature setting	from 35 to 85 °C	82	if parameter 420 = 1
				from 20 to 45 °C	45	if parameter 420 = 0
4	**2**	**6**	Zone 1 heating MINIMUM temperature setting	from 35 to 85 °C	35	if parameter 420 = 1
				from 20 to 45 °C	25	if parameter 420 = 0

menu	sub-menu	Parameter	Description	value	default setting	
4	**3**	**DIAGNOSTICS**				
4	**3**	**4**	Zone 1 heat request	0 = OFF 1 = ON		
5	**ZONE 2 PARAMETER**					
5	**0**	**ZONE 2 TEMPERATURE SETTING**				
5	**0**	**2**	Heating fixed temperature setting "Heating fixed temp"	from 35 to 82 °C (high temperature - para. 420 =1)	70	*Activated only with temperature control and fixed temperature (see 521)*
				from 20 to 45 °C (high temperature - para. 420 =0)	20	
5	**2**	**ZONE 2 SETTING**				
5	**2**	**0**	Heating appliance temperature value setting	0 = from 20 to 45°C (low temper ature) 1 = from 35 to 85°C (high temperature)	1	select in the appliance type base
5	**2**	**1**	Basic heating control type selection type depending on the peripheral devices connected	0 = fixed flow temperature 1 = device On/Off 2 = NOT PRESENT 3 = external sensor only 4 = NOT PRESENT	1	To activate heating control, press the AUTO button. The display lights up the AUTO symbol
5	**2**	**2**	Slope	from 0_2 to 0_8		(low temperature)
				from 1_0 to 3_5	1_5	(high temperature)
			- see graph on the previous page *If the external sensor is used, the boiler calculates the most suitable heating flow temperature taking the external temperature and the type of appliance into account.* *The type of curve must be chosen according to the type of appliance radiator and the heat losses present in the building.*			
5	**2**	**3**	Parallel curve shift Zone 2 Offset	from - 7 to + 7 (low temperature)	0	
				from - 14 to + 14 (high temperature)		
			To adapt the thermal curve to the appliance requirements, it is possible to perform a parallel shift of the curve in order to alter the calculated flow temperature and therefore the ambient temperature. *By accessing this parameter or pressing the buttons 12 the curve can be shifted in a parallel manner as indicated in the figure shown below.* *The value is indicated on the display:* - *from -7 to +7* (low temperature) - *from -14 to +14* (high temperature) *Each step represents a flow temperature increase/decrease of 1°C in relation to the set-point value.*			
5	**2**	**4**	Compensation	from 0 to 20	20	if setting = 0, the temperature taken from the ambient sensor does not affect the calculation of the setting. If setting = 20, the temperature taken has maximum influence on the setting.
5	**2**	**5**	Zone 2 heating MAXIMUM temperature setting	from 35 to 85 °C	82	if parameter 520 = 1
				from 20 to 45 °C	45	if parameter 520 = 0
5	**2**	**6**	Zone 2 heating MINIMUM temperature setting	from 35 to 85 °C	35	if parameter 520 = 1
				from 20 to 45 °C	25	if parameter 520 = 0
5	**3**	**DIAGNOSTICS**				
5	**3**	**4**	Zone 2 heat request	0 = OFF 1 = ON		

menu	sub-menu	Parameter	Description	value	default setting	
6	**ZONE 3 PARAMETER**					
6	**0**	**ZONE 3 TEMPERATURE SETTING**				
6	**0**	**2**	Heating fixed temperature setting "Heating fixed temp"	from 35 to 82 °C (high temperature - para. 420 =1)	70	*Activated only with temperature control and fixed temperature (see 621)*
				from 20 to 45 °C (high temperature - para. 420 =0)	20	
6	**2**	**ZONE 3 SETTING**				
6	**2**	**0**	Heating appliance temperature value setting	0 = from 20 to 45°C (low temper ature) 1 = from 35 to 85°C (high temperature)	1	select in the appliance type base
6	**2**	**1**	Basic heating control type selection type depending on the peripheral devices connected	0 = fixed flow temperature 1 = device On/Off 2 = NOT PRESENT 3 = external sensor only 4 = NOT PRESENT	1	To activate heating control, press the AUTO button. The display lights up the AUTO symbol
6	**2**	**2**	Slope	from 0_2 to 0_8		(low temperature)
				from 1_0 to 3_5	1_5	(high temperature)
			- see graph on page 42 *If the external sensor is used, the boiler calculates the most suitable heating flow temperature taking the external temperature and the type of appliance into account.* *The type of curve must be chosen according to the type of appliance radiator and the heat losses present in the building.*			
6	**2**	**3**	Parallel curve shift Zone 2 Offset	from - 7 to + 7 (low temperature)	0	
				from - 14 to + 14 (high temperature)		
			To adapt the thermal curve to the appliance requirements, it is possible to perform a parallel shift of the curve in order to alter the calculated flow temperature and therefore the ambient temperature. *By accessing this parameter or pressing the buttons 12 the curve can be shifted in a parallel manner as indicated in the figure shown below.* *The value is indicated on the display:* - *from -7 to +7* (low temperature) - *from -14 to +14* (high temperature) *Each step represents a flow temperature increase/decrease of 1°C in relation to the set-point value.*			
6	**2**	**4**	Compensation	from 0 to 20	20	*if setting = 0, the temperature taken from the ambient sensor does not affect the calculation of the setting. If setting = 20, the temperature taken has maximum influence on the setting.*
6	**2**	**5**	Zone 3 heating MAXIMUM temperature setting	from 35 to 85 °C	82	if parameter 620 = 1
				from 20 to 45 °C	45	if parameter 620 = 0
6	**2**	**6**	Zone 3 heating MINIMUM temperature setting	from 35 to 85 °C	35	if parameter 620 = 1
				from 20 to 45 °C	25	if parameter 620 = 0
6	**3**	**DIAGNOSTICS**				
6	**3**	**4**	Zone 3 heat request	0 = OFF 1 = ON		

menu	sub-menu	Parameter	Description	value	default setting	
8	**SERVICE PARAMETERS**					
8	**1**	**BOILER STATISTICS**				
8	**1**	**0**	Number of hours burner operating in heater mode (xxh/10)			
8	**1**	**1**	Number of hours burner operating in hot water mode (xxh/10)			
8	**1**	**2**	Number of flame separations (nr/10)			
8	**1**	**3**	Number of ignition cycles (nr/10)			
8	**1**	**4**	Average length of heating request (minutes)			
8	**2**	**BOILER**				
8	**2**	**1**	Fan Status	0 = OFF 1 = ON		
8	**2**	**2**	Fan speed (x100) rpm			
8	**2**	**4**	Diverter valve position	0 = D.H.W. 1 = Central Heating		
8	**2**	**5**	D.H.W. Flow Rate (l/min)			
8	**2**	**7**	Modulating Pump (%)			
8	**2**	**8**	Gas Power (kW)			
8	**3**	**BOILER TEMPERTURE**				
8	**3**	**1**	Heating flow temperature (in °C)			
8	**3**	**2**	Heating backflow temperature (in °C)			
8	**4**	**SOLAR & STORAGE**				
8	**4**	**2**	Solar appliance water input temperature			activated only with the solar kit connected
8	**5**	**SERVICE**				
8	**5**	**0**	Months to next maintenance	from 0 to 60 (month)	24	
			If setted the boiler will display that is time to call the installer for maintenance			
8	**5**	**1**	Enable Maintenance advice	0 = OFF 1 = ON	0	
8	**5**	**2**	Maintenance Warning Reset	Reset? OK= Yes Esc = No		
			to erase the advice for maintenance			
8	**5**	**3**	2nd Heat Exchanger Clogging State	0 = DHW Exchanger OK 1 = Partially Clogged 2 = Very Clogged Please Replace		
8	**5**	**4**	PCB hardware version			
8	**5**	**5**	PCB software version			
8	**6**	**ERROR LIST**				
8	**6**	**0**	10 last errors	from E00 to E99		
			This parameter allows the last 10 boiler errors flagged to be displayed, indicating the day, month and year. When the parameter is accessed, the errors are displayed listed from E00 to E99. For each error, the following sequence is displayed: E00 - error number 108 - error code			
8	**6**	**1**	Error list reset	Reset OK = yes ESC = no		

Important

Maintenance is an essential part of the safe and efficient operation of the boiler and ensures its durability. It should be performed according to the instructions given in current legislation. Perform combustion analysis regularly in order to check the operating efficiency of the boiler and to make sure any polluting substances released are within the boudaries set by current legislation.

Before beginning maintenance work:

- Disconnect the appliance from the electricity supply by turning the external bipolar switch to the "OFF" position;
- Close the gas valve and the central heating and domestic hot water system valves.

After the work has been completed the initial settings will be restored.

General comments

It is recommended that the following inspections be carried out on the boiler at least once a year:

1. Check the seals in the water part and, if necessary, replace the gaskets and restore the seal to perfect working order.
2. Check the seals in the gas part and, if necessary, replace the gaskets and restore the seal to perfect working order.
3. Visually check the overall condition of the boiler.
4. Visually check and, if necessary, disassemble and clean the burner.
5. Following the inspection detailed in point "3", disassemble and clean the combustion chamber, if necessary.
6. Following the inspection detailed in point "4", disassemble and clean the burner, if necessary.
7. Cleaning the primary heat exchanger
8. Make sure the following heating safety devices are operating correctly:
   - temperature limit safety device.
9. Make sure that the following gas part safety devices are operating correctly:
   - absence of gas or flame safety device (ionisation).
10. Check the efficiency of the domestic hot water production process (test the flow rate and temperature).
11. Perform a general inspection of the boiler operation.
12. Remove oxide from the detection electrode using an emery cloth.
13. These checks are not exhaustive. Further mechanical, electrical and combustion maintenance checks may be required.

Operational test

After having carried out the maintenance operations, fill the heating circuit at a pressure of approximately 1.5 bar and release the air from the system.

Fill the domestic hot water system at the same time.

- Begin operating the boiler.
- If necessary, release the air from the heating system again.
- Check the settings and make sure all the command, adjustment and monitoring parts are working correctly.
- Check the flue system is sealed and operating correctly.

Draining procedures

The heating system must be drained using the following procedure:

- Switch off the boiler, make sure the external bipolar switch is in the OFF position and shut off the gas valve;
- Loosen the automatic air relief valve;
- Open the system drain off cock and collect the escaping water in a container;
- Empty the water from the lowest points of the system (where applicable).

If the system is to be left inactive in areas where the room temperature may fall below 0°C during winter, we recommend that anti-freeze liquid is added to the water in the heating system in order to avoid the need for repeated draining; when this liquid is used make sure it is compatible with the stainless steel used for the bodywork of the boiler.

We recommend the use of anti-freeze products which contain PROPYLENE GLYCOLS as these inhibit corrosion and that they are used in conjunction with the anti-scaling and anti-corrosion function, in the quantities suggested by the manufacturer, at the mimimum temperature.

Regularly check the pH level of the water/anti-freeze mix in the boiler circuit and replace it when the value measured is lower than the limit prescribed by the manufacturer.

DO NOT MIX DIFFERENT TYPES OF ANTI-FREEZE.

The manufacturer will not be held liable for any damage caused by the appliance or the system due to the use of inappropriate anti-freeze substances or additives.

Draining the domestic hot water system and indirect cylinder

Every time there is a danger of freezing, the domestic hot water system must be drained as follows:

- Shut off the water mains inlet valve;
- Open all the hot and cold water taps;
- Empty the water from the lowest points of the system (where applicable).

WARNING

Before handling, empty all components which may contain hot water, performing bleeding where necessary.

Descale the components in accordance with the instructions provided on the safety data leaflet supplied with the product used, make sure the room is well ventilated, wear protective clothing, avoid mixing different products, and protect the appliance and surrounding objects.

Seal all openings used to take a gas pressure reading or to make any gas adjustments.

If a smell of burning is detected or smoke is seen leaking from the appliance, or there is a smell of gas, disconnect it from the electricity supply, shut off the gas valve, open the windows and call for technical assistance.

Cleaning the primary exchanger

Cleaning the combustion side

The inside of the primary exchanger is accessed by removing the burner. Wash with water and detergent using a non-metallic rifle-type brush, rinse with water.

Cleaning the trap

The trap is accessed by emptying the condensate bowl located in the bottom section. Wash with water and detergent.

Replace the condensate collection bowl in its housing.

NB: In the event of prolonged use of the appliance, the trap must be filled before being used again.

A lack of water in the trap is dangerous and may cause products to be released into the atmosphere.

1. GENERAL ACCESS

1.1 General Access

Tools

TIME 3 min

Unclip the cover to remove

1

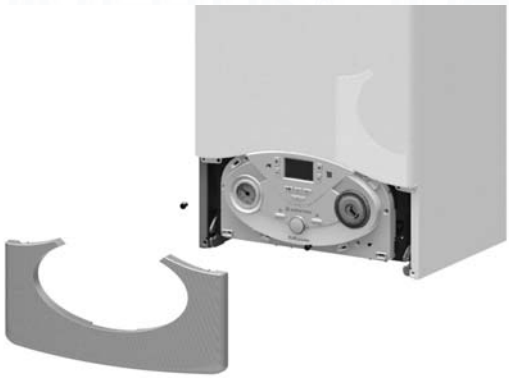

Remove the two screws

2

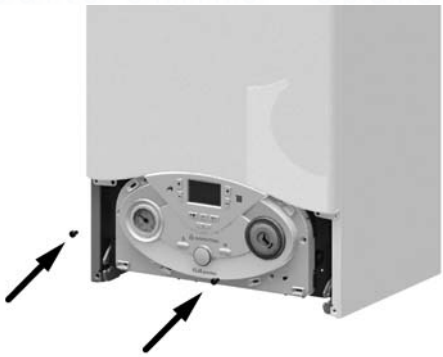

Remove the front panel

3

Lower the electrical front panel

4

Remove the combustion chamber front panel by releasing the clips

5

2. ELECTRICAL UNIT

2.1 Control box access

Tools

TIME 4 min

Remove the front panel as above and pivot the electricl box

1 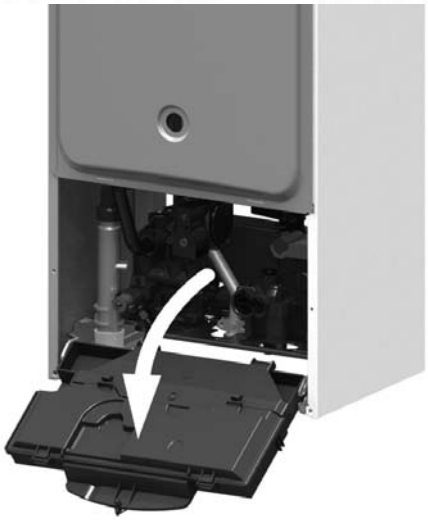

Unhook the two clip and rotate the cover

2 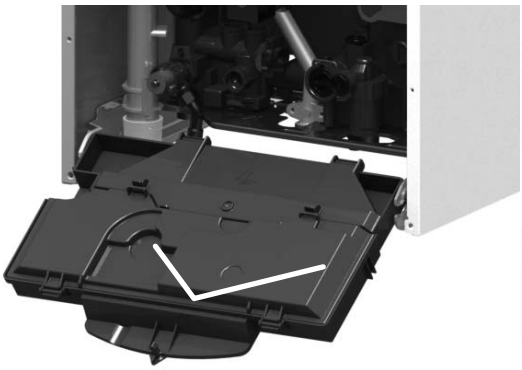

3 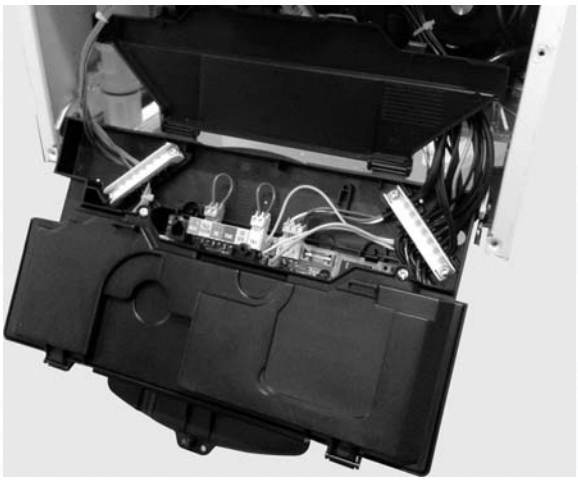

Unscrew the two screws and remove the cover

3 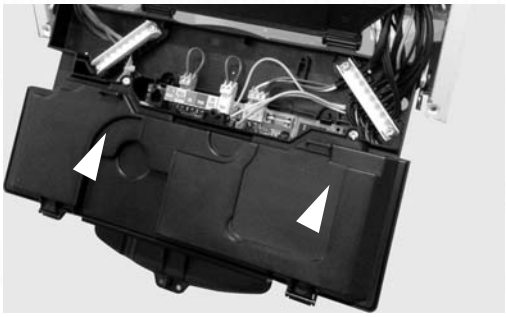

4 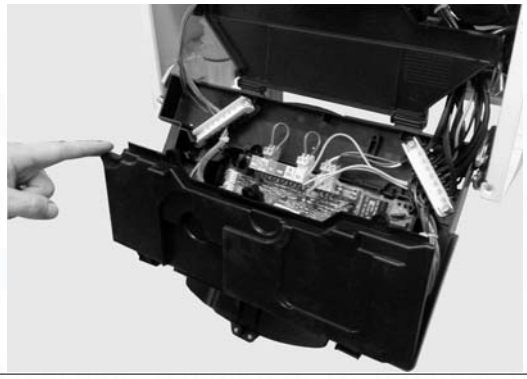

5 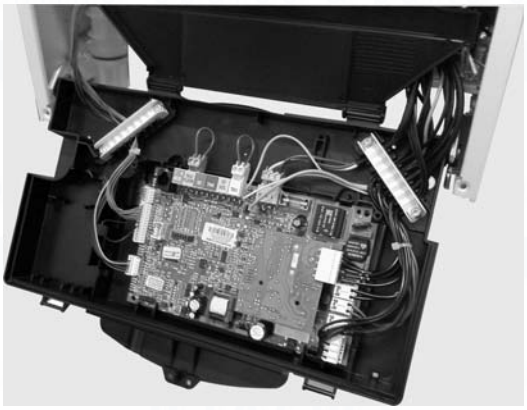

2.2 Fuse

Tools

TIME 5 min

Open the control box as above

1

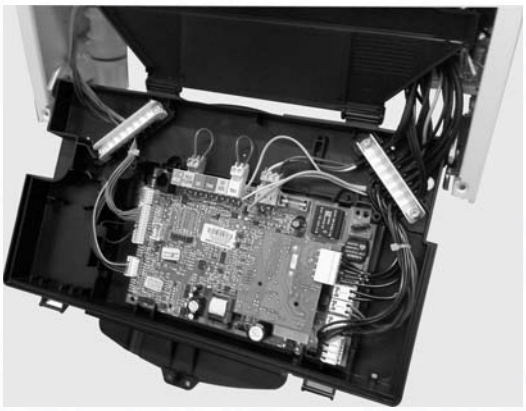

Remove the fuse

2

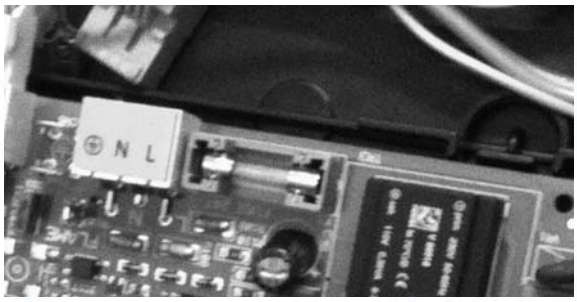

3

2.3 Main P.C.B.

Tools

TIME 5 min

After opening the control box, disconnect the elctrical plug connections

1

Unhook and remove the P.C.B.

2

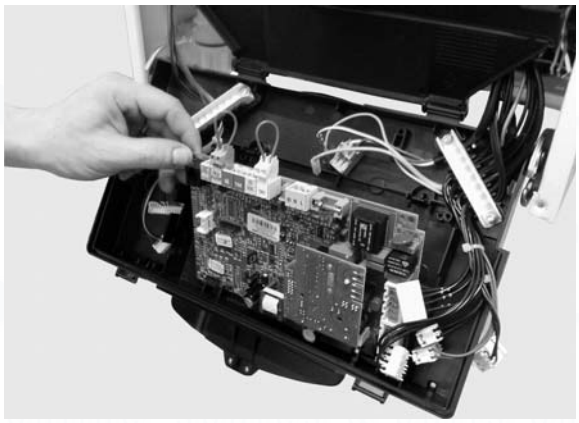

2.4 Display P.C.B.

Tools

TIME 5 min

Unscrews the two screws and pull the assembly towards you

1

Disconnect the elctrical plug connections and unhook and remove the P.C.B.

2

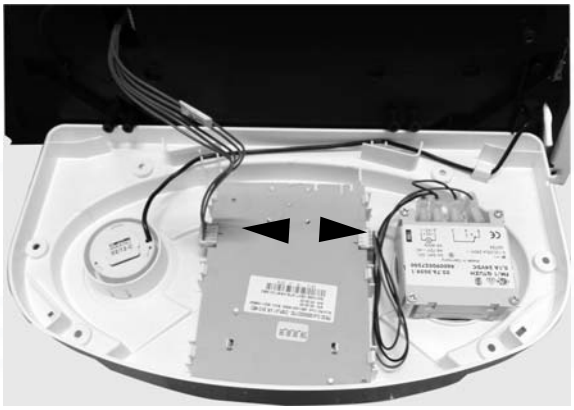

3

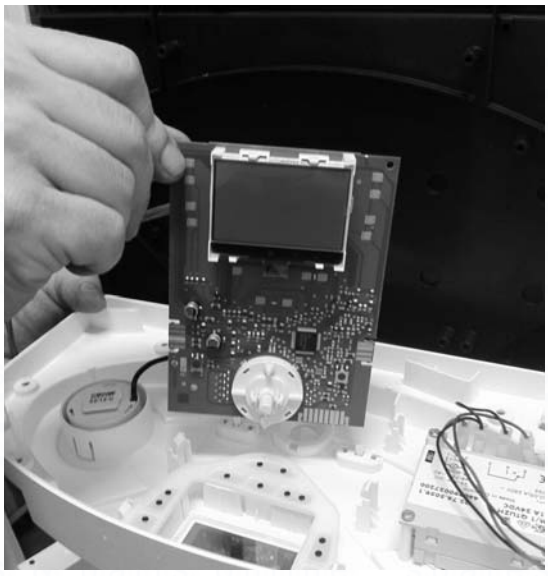

3. HYDRAULIC UNIT

3.1 RIGHT HAND HYDRAULIC BLOCK ASSEMBLY

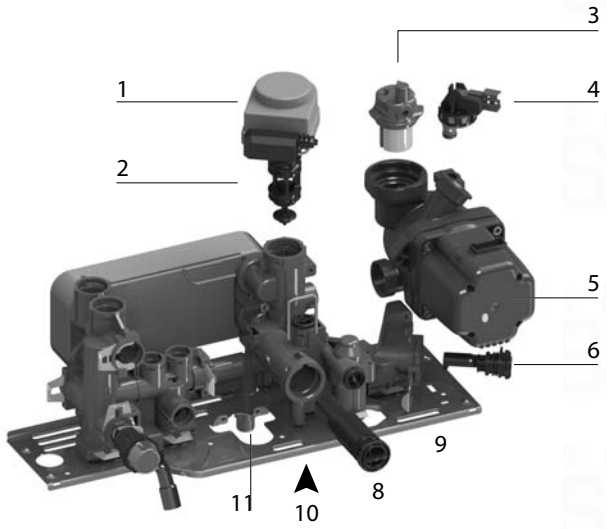

Legend:
1 - Diverter valve motor
2 - Diverter valve
3 - Auto air vent
4 - Primary water pressure switch
5 - Pump
6 - Central heating filter
8 - D.H.W. flow switch assembly
9 - Central Heating return
10 - Cold water inlet (D.H.W.)
11 - C.H. drain valve

3.2. 3 Way valve unit

Tools 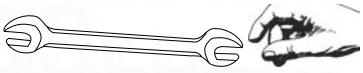

TIME 5 min

Unplug the diverter valve cable

1 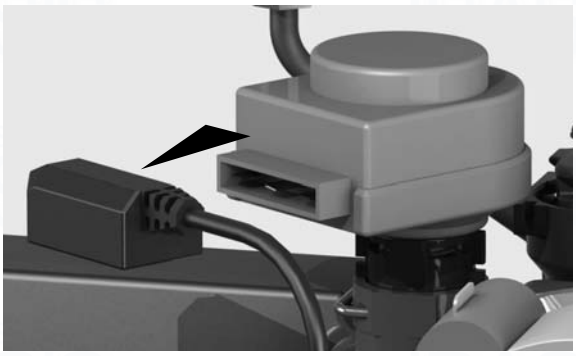

Remove the clip and lift the motor from the diverter valve body.

2 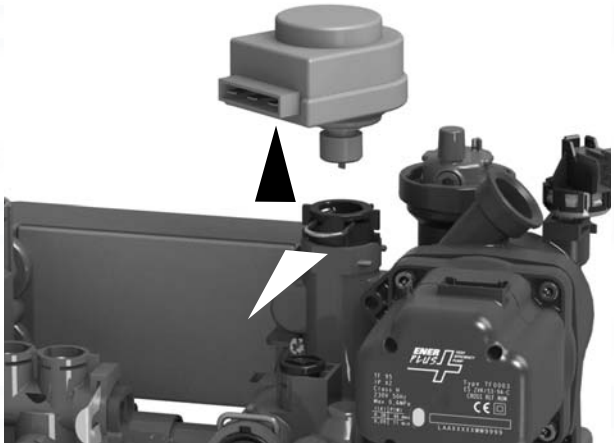

Drain the boiler (see 3.3). Remove the clip and lift the diverter valve from the assembly.

3 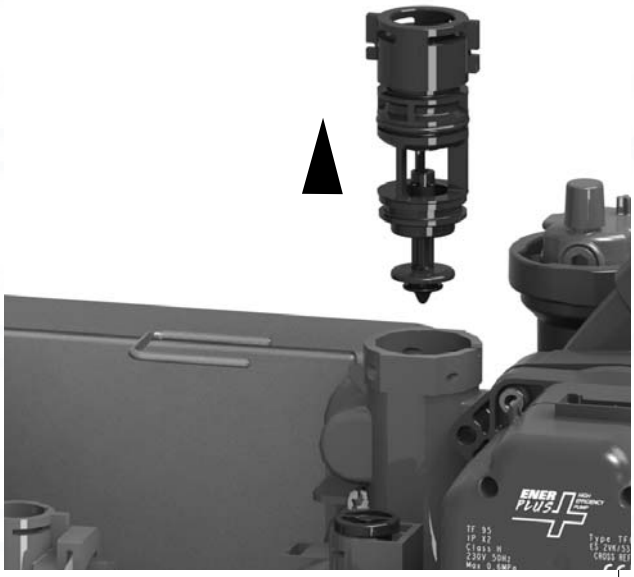

When reassembling, ensure the diverter valve is aligned correctly.

4

3.3 Draining

Tools

TIME 5 min

Turn the drain valve anti-clockwise to open and drain the water from the boiler

1

3.4 Automatic air vent

Tools

TIME 5 min

Drain the boiler (see 3.3). Unscrew anticlockwise the AAV from the assembly.

1

2

3.5 Primary water pressure sensor

Tools

TIME 5 min

Drain the boiler (see 3.3). Slide the fixing clip, (it is held captive) unplug the electrical connector and lift the sensor from the assembly.

1

2

3.6 Pump

Tools

TIME 10 min

Drain the boiler (see 3.3). Remove the clip and the two screws

1

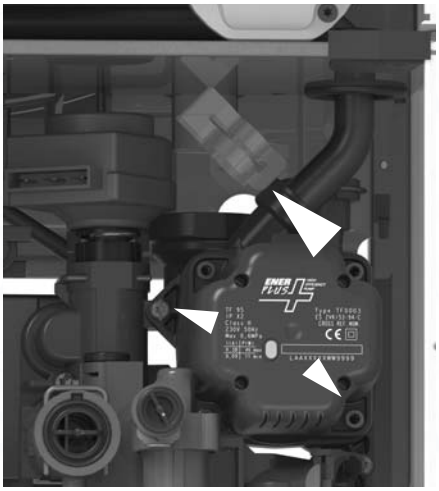

Disconnect the pipe and then move the pump to the right to disengage

2

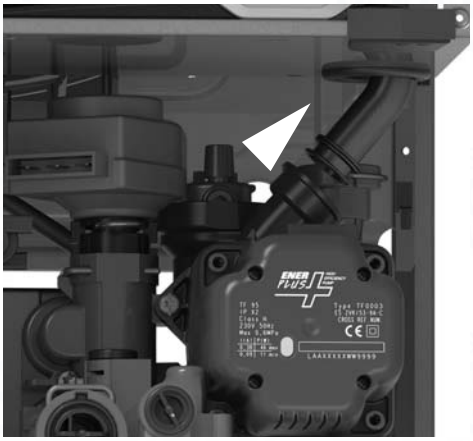

Remove the pump

3

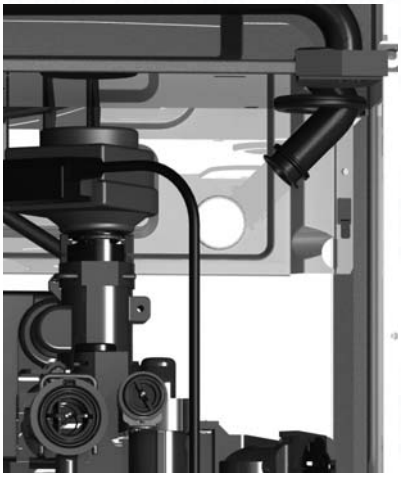

Remove the sensor (see 3.5)

4

Remove the AAV (see 3.4)

5

6

3.7 C.H. Filter

Tools

TIME 5 min

Drain the boiler (see 3.3).
Remove the clip and remove the filter

1

Remove the filter

2

3.8 D.H.W. Flow switch assembly

Tools

TIME 10 min

Drain the boiler (see 3.3). Remove the clip and pull the flow switch assembly towards you

1

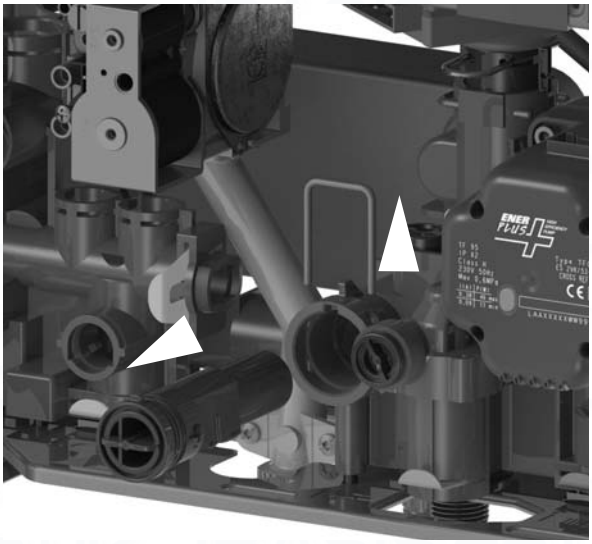

Twist the flow switch assembly to disengage

2

3.9 LEFT HAND HYDRAULIC BLOCK ASSEMBLY

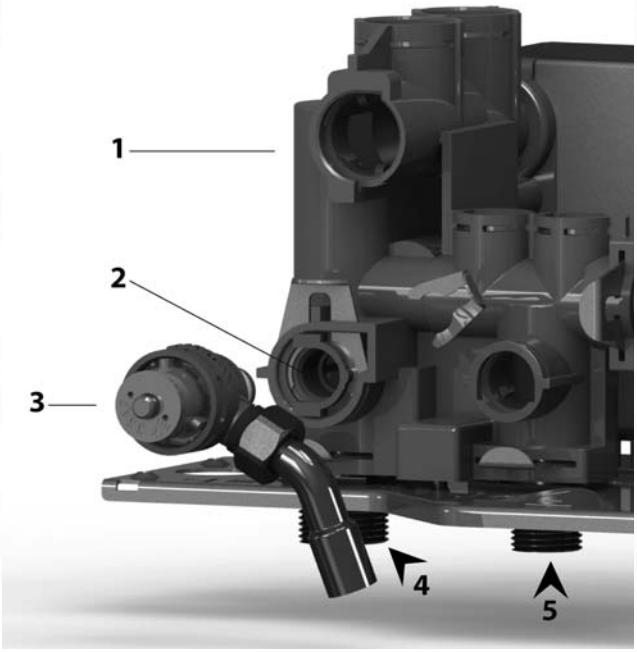

Legend:
1 - Left hand hydraulic block
2 - By-pass assembly
3 - Safety valve
4 - Central heating flow
5 - Domestic hot water outlet

3.11 Secondary heat exchanger

Tools

TIME 10 min

Drain primary and domestic hot water circuits. Remove the two screws and remove the heat exchanger

1

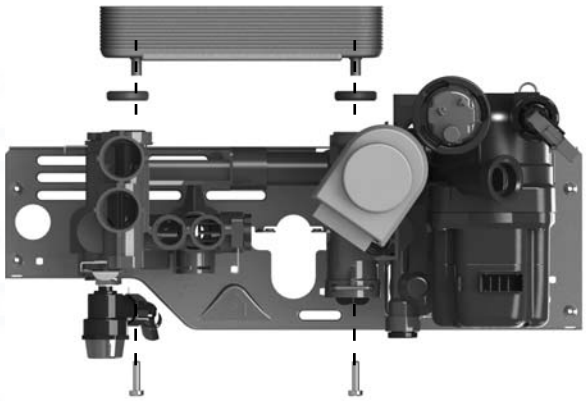

2

3.12 Condensate trap

Tools 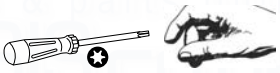

TIME 5 min

Unscrew the condensate trap from the condensate body

1 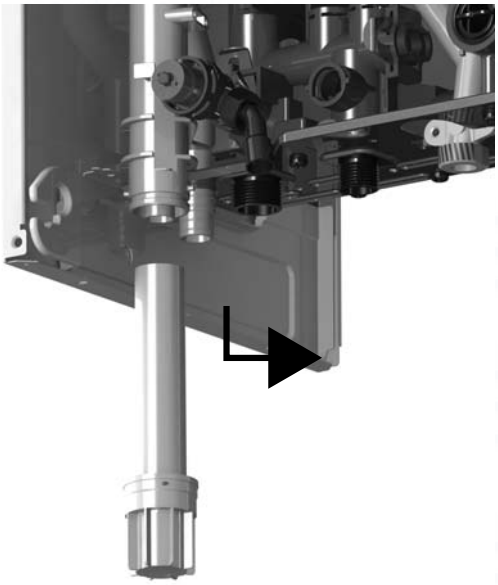

3.13 Safety valve

Tools

TIME 5 min

Drain the boiler (see 3.3). Disconnect the discharge pipe.
Remove the fist clip on the left and pull the safety valve towards you

1 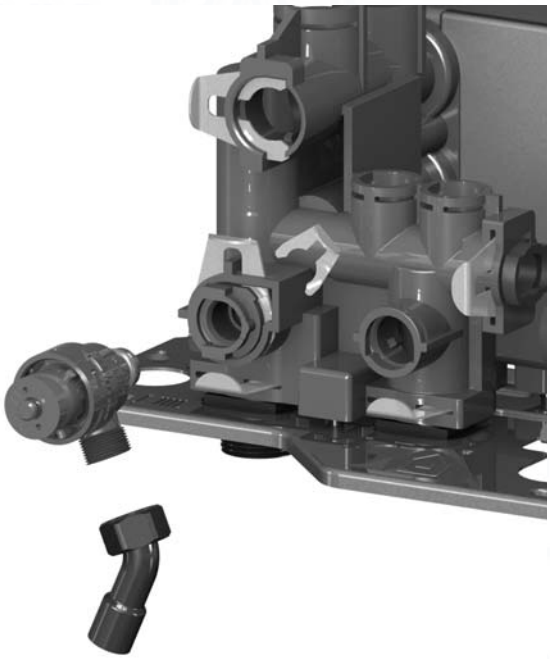

2

3.14 By-pass assembly

Tools

TIME 5 min

Drain the boiler (see 3.3). Remove the second clip and pull the assembly towards you

1

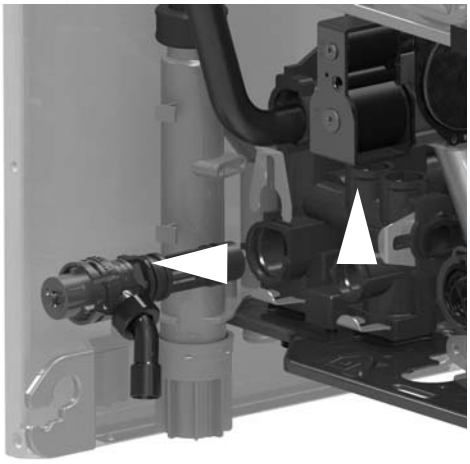

2

3

3.15 Temperature sensors

Tools

TIME 5 min

NTC1 : Black
NTC2: Red

1

Unplug the electrical connectors

2

Remove the clip and the temperature sensor

3

IMPORTANT ! Do not use conducting paste for the contact sensors because it will alter the resistance value.

TEMPERATURE	RESISTANCE (kOhm)
0	27
10	17
20	12
25	10
30	8
40	5
50	4

3.16 Manual Air vent

Tools

TIME 5 min

Drain boiler (see 3.3)
Unscrew and lift the manual air vent from the exchanger

1

2

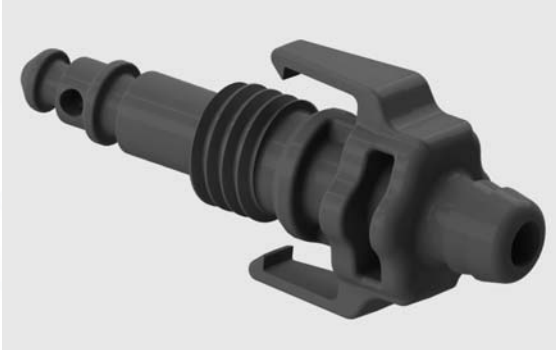

3

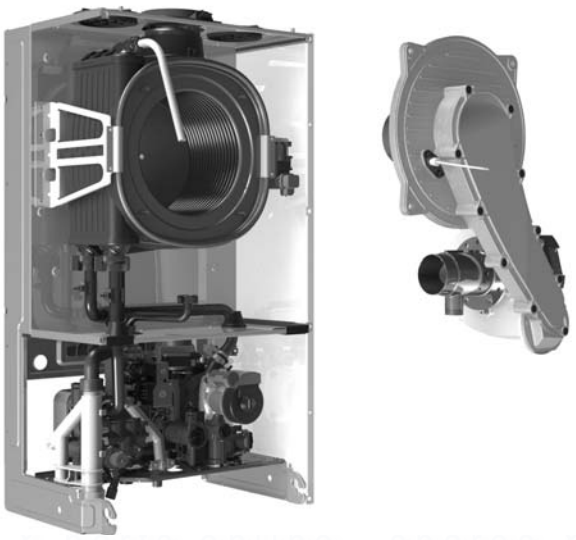

Remove the four screws to free the heat exchanger

4

Unscrew and lift the manual air vent from the exchanger

5

3.17 Main heat exchanger

Tools

TIME 20 min

Drain boiler (see 3.3)
Remove the silencer

1

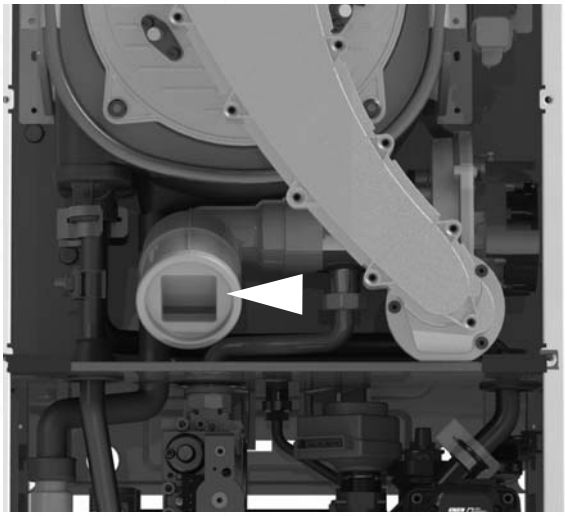

Remove the two clips and disconnect the pipes.
Isolate the gas supply and disconnect the gas pipe.
Remove the four screws.

2

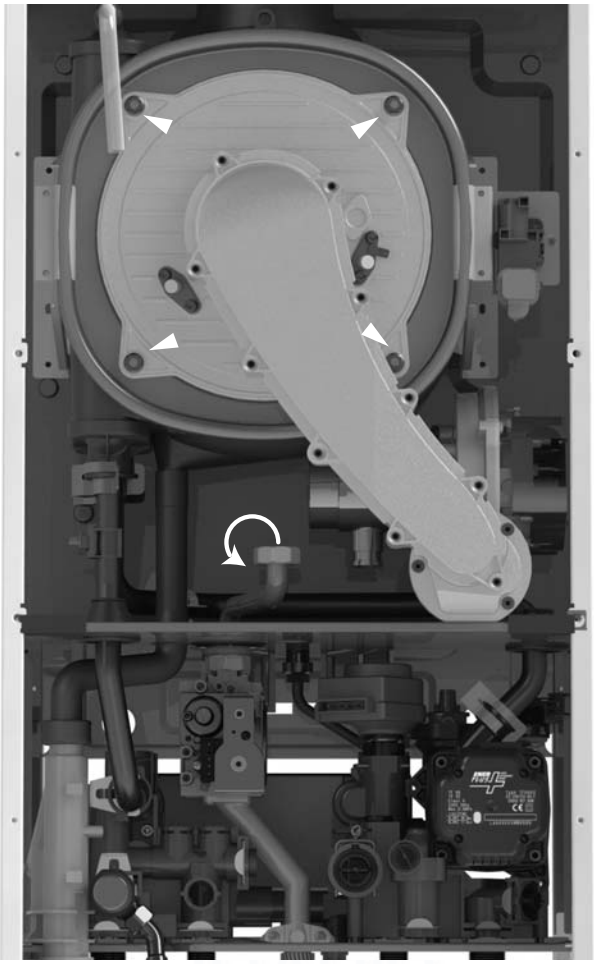

Remove the burner unit

4. BURNER UNIT

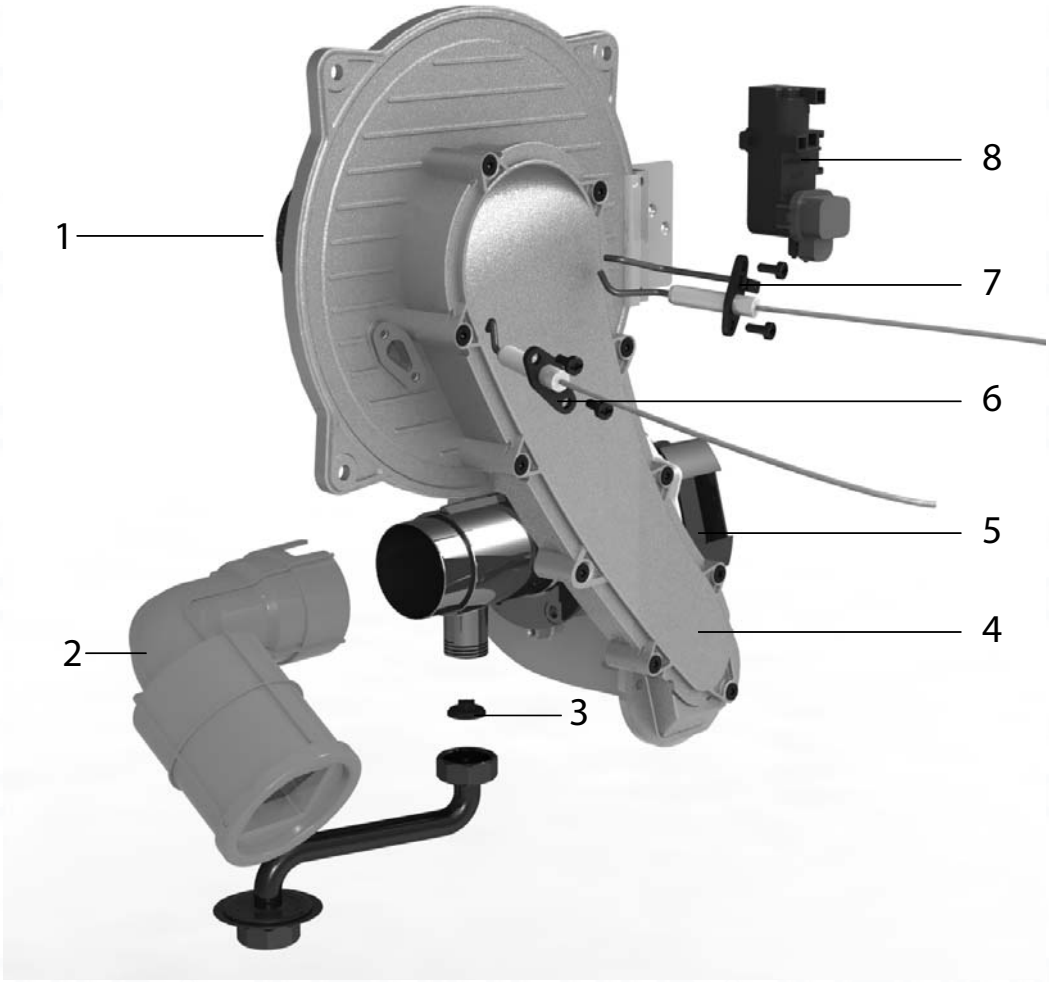

Legend:
1 - Burner
2 - Silencer
3 - Gas diaphram
4 - Mixing tube
5 - Fan
6 - Detection electrode
7 - Ignition electrode
8 - Spark generator

4.1 Spark generator

Tools

TIME 5 min

Unplug the ignition electrode from the spark generator.

1

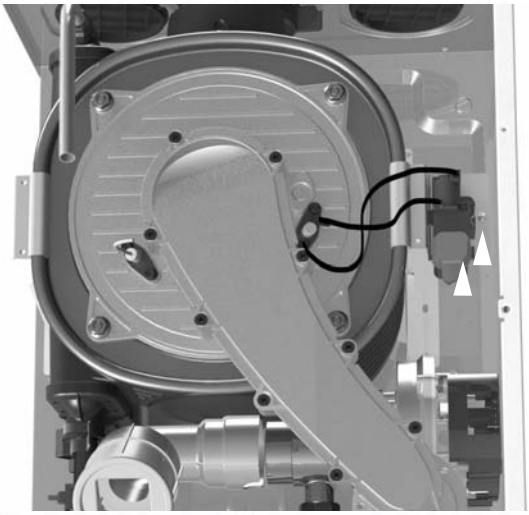

Remove the screws and the spark generator

2

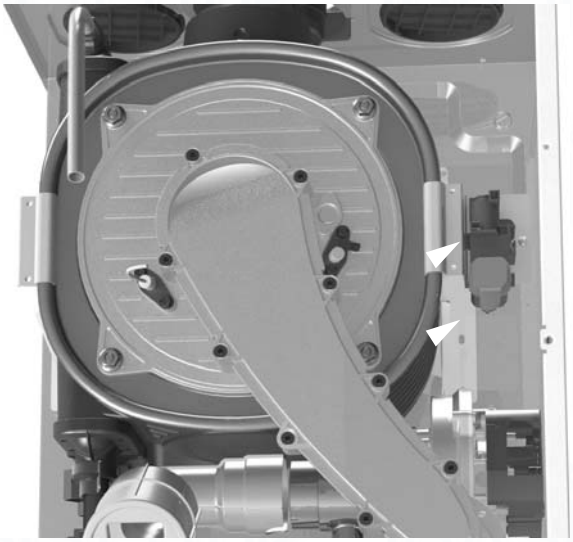

4.2 Electrodes

Tools

TIME 5 min

Unplug the electrodes

1

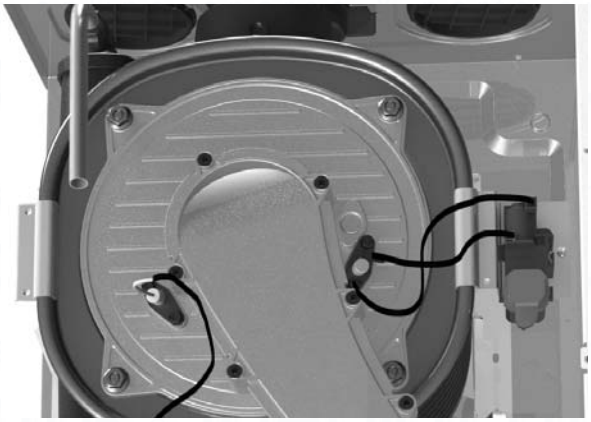

Remove the screws and pull the electrodes towards you.

2

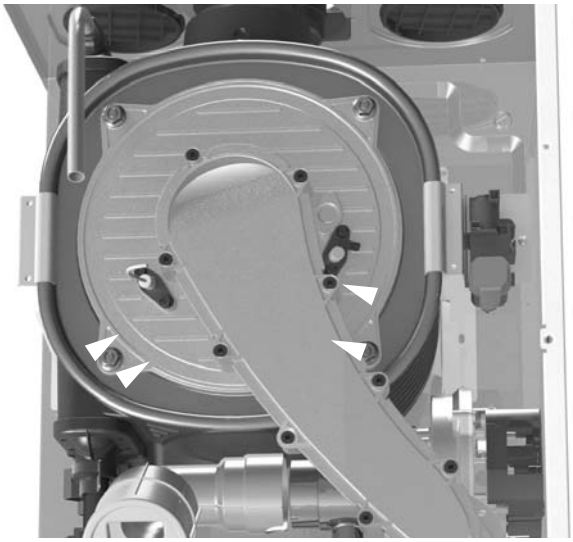

3

4.3 Burner

Tools

TIME 15 min

Remove the silencer

1 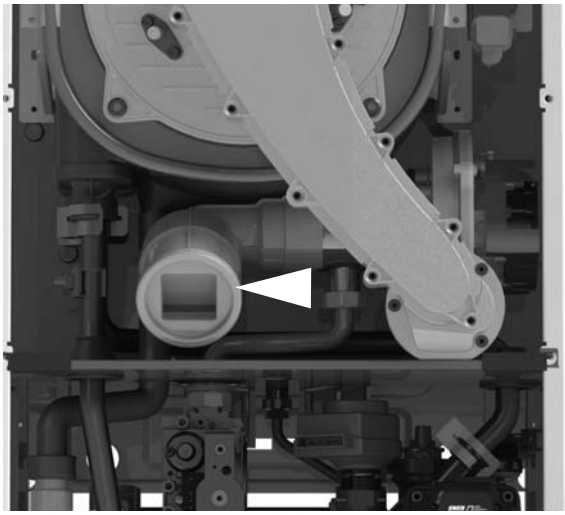

Isolate the gas supply. Disconnect the gas pipe.

2 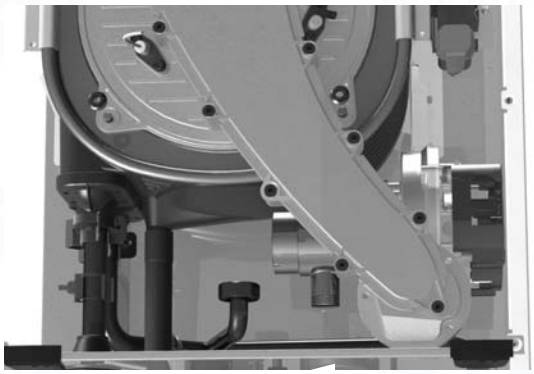

Pull the assembly towards you

3

Remove the ten screws to free the burner door

4 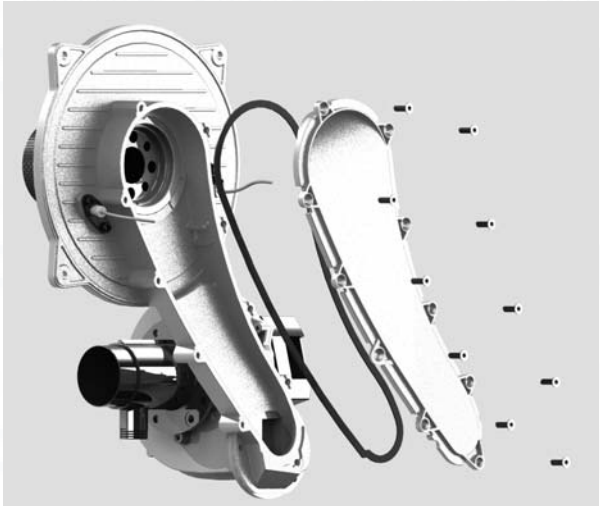

Pull the burner toward you
Replace any gaskets that are damaged or showing signs of deterioration

5 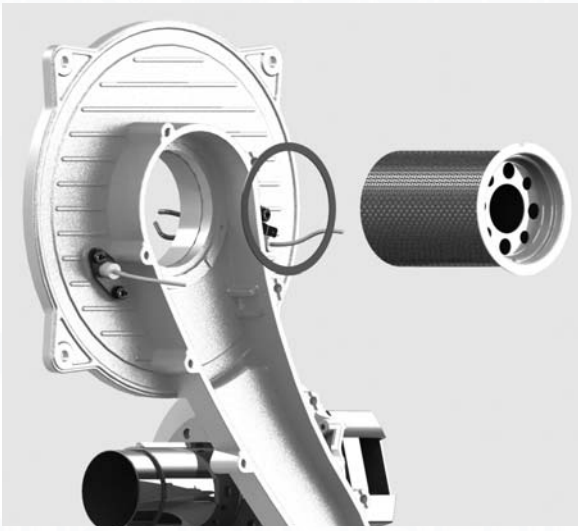

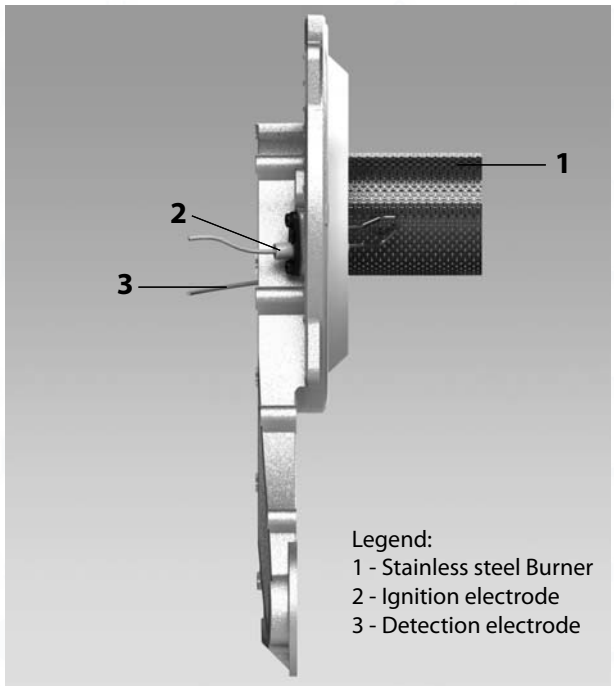

Fan & mixer venturi according to the model		
Power	**Length**	**Venturi diameter**
18 kW	104.6 mm	Ø 14
24 kW	104.6 mm	Ø 17
30 kW	135.8 mm	Ø 21
38 kW	167 mm	Ø 25

4.4 Fan

Tools

TIME 15 min

Remove the combustion assembly (see 4.3)

1

Remove the three screws to free the fan.

2

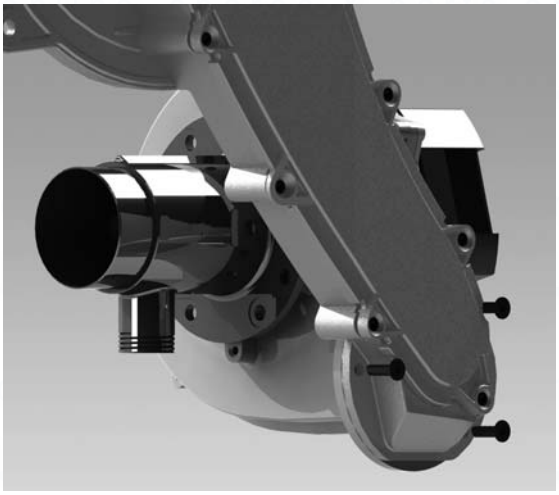

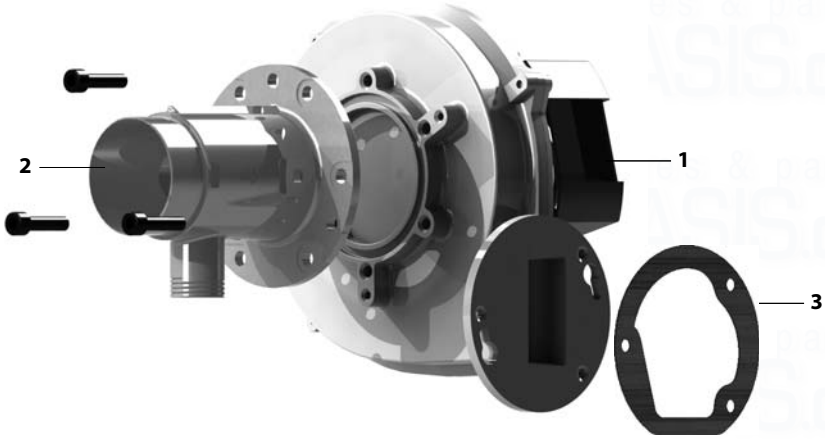

Legend:
1 - Fan
2 - Venturi
3 - Gasket

Fan & mixer venturi according to the model		
Power	**Fan**	**Venturi diameter**
18 kW	EBM RG 118 40 W	Ø 14
24 kW	EBM RG 118 40 W	Ø 17
30 kW	EBM RG 118 40 W	Ø 21
38 kW	EBM RG 118 40 W	Ø 25

4.5 Gas Valve

Tools

TIME 15 min

Remove the two screws under the boiler and disconnect the gas pipe on the top of the gas valve

1

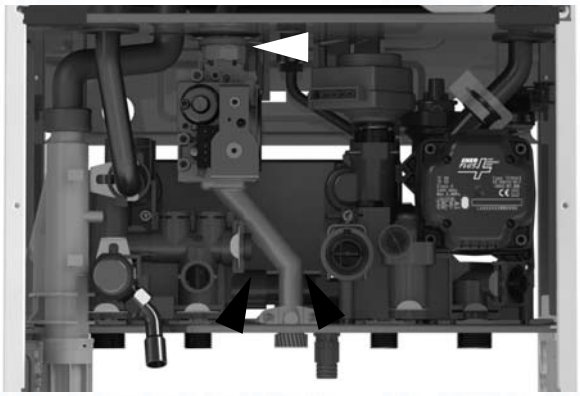

Remove the gas valve

2

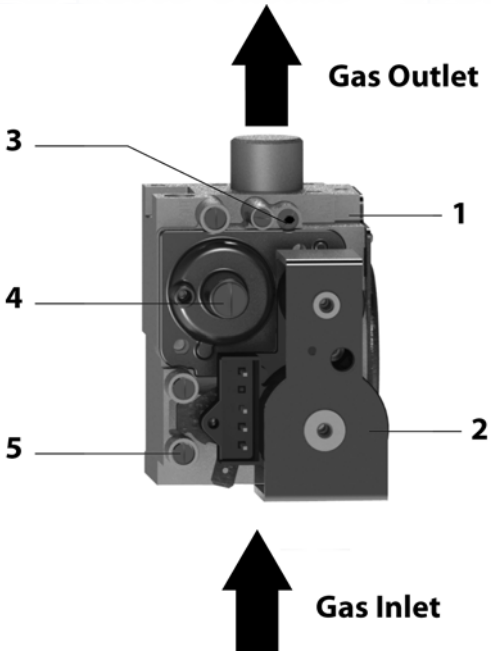

Legend:
1 - Gas valve
2 - Solenoids
3 - Throttle adjustment
4 - Offset adjustment
5 - Inlet test nipple

5. ANNUAL MAINTENANCE

Plate heat exchanger Maintenance Interval: As necessary How: To measure specification of DHW performance.	
By-pass & Safety valve Maintenance Interval: Annually How: Visual inspection / Clean as necessary	
Central heating filter Maintenance Interval: Annually How: Visual inspection / Clean as necessary	
Flow switch operation Maintenance Interval: Annually How: Visual inspection / Clean as necessary / Check flow rate	
Expansion vessel Maintenance Interval: Annually How: Check air pressure is at 1 bar (System drained)	
Ignition & detection electrodes Maintenance Interval: Annually How: Visual inspection / Clean as necessary / Distance from the burner / Ionisation current more than 1 µA	
Burner Maintenance Interval: Annually How: Visual inspection / Clean as necessary	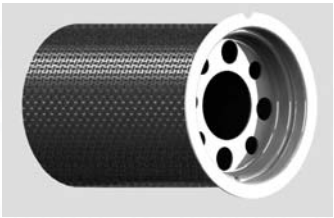
Fan Maintenance Interval: Annually How : Visual inspection / Clean as necessary	

Primary Heat exchanger Maintenance Interval: Annually How : Visual inspection / Clean as necessary	
Condensate trap **Maintenance Interval: Annually** **or after cleaning primary heat exchanger** **How : Visual inspection / Clean as necessary /** **Add water before replacing**	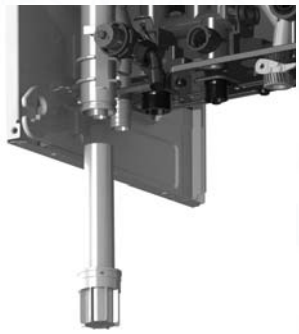
Pump **Maintenance Interval: At the first ignition and annually** **How: Check that the AAV is open /** **Visual inspection / Clean as necessary**	

	Model: CLAS HE EVO			24 EU	30 EU	38 EU
GENERAL NOTE	CE Certification (pin)			0085CL0440		
	Boiler type			C13(X)-C23-C33(X)-C43(X)-C53(X)-C63(X) C83(X)-C93(X)-B23-B23P-B33		
POWER SPECIFICATIONS	Max/min nominal calorific flow rate (Pci)	Qn	KW	22.0/5.5	28.0/6.5	31.0/7.5
	Max/min nominal calorific flow rate (Pcs)	Qn	KW	24.4/6.1	31.1/7.2	34.4/8.3
	Domestic hot water max/min nominal calorific flow rate (Pci)	Qn	KW	26.0/5.5	30.0/6.5	38.0/7.5
	Domestic hot water max/min nominal calorific flow rate (Pcs)	Qn	KW	28.9/6.1	33.3/7.2	42.2/8.3
	Max/min power output (80°C-60°C)	Pn	KW	21.5/5.4	27.3/6.3	30.2/7.3
	Max/min power output (50°C-30°C)	Pn	KW	23.3/5.7	29.7/6.8	33.0/7.9
	Domestic hot water max/min power output	Pn	KW	26.0/5.5	29.3/6.3	38.0/7.5
	Combustion efficiency (of flue gas)		%	97.8	97.8	97.9
	Nominal calorific flow rate efficiency (60/80°C) Hi/Hs		%	97.5/87.8	97.6/87.8	97.6/87.9
	Nominal calorific flow rate efficiency (30/50°C) Hi/Hs		%	105.8/95.3	106.0/95.5	106.4/95.8
	Efficiency at 30% at 30°C Hi/Hs		%	107.7/97.0	107.7/97.0	107.7/97.0
	Minimum calorific flow rate efficiency (60/80°C) Hi/Hs		%	97.6/87.9	97.5/87.8	97.5/87.8
	Efficiency rating (dir. 92/42/EEC)		stars	****	****	****
	Sedbuk class		class	A/90	A/90	A/90.1
	Loss of burner gas when operating		%	2.2	2.2	2.2
EMISSIONS	Available air pressure		Pa	100	100	100
	NoX class		class	5	5	5
	Flue gas temperature (G20) (80°C-60°C)		°C	64	64	64
	CO2 content (G20) (80°C-60°C)		%	9.0	9.0	9.0
	CO content (0%O2) (80°C-60°C)		ppm	119	101	98
	O2 content (G20) (80°C-60°C)		%	4.5	4.5	4.5
	Maximum flue gas flow (G20) (80°C-60°C)		Kg/h	42.8	49.4	62.6
	Excess air (80°C-60°C)		%	27	27	27
HEATING CIRCUIT	Expansion chamber inflation pressure		bar	1	1	1
	Maximum heating pressure		bar	2,5	2,5	2,5
	Expansion chamber capacity		L	6.5	6.5	6.5
	Min/max heating temperature (high temperature range)		°C	35 / 82	35 / 82	35 / 82
	Min/max heating temperature (low temperature range)		°C	20 / 45	20 / 45	20 / 45
DOMESTIC HOT WATER CIRCUIT	Domestic hot water max/min temperature		°C	36 / 60	36 / 60	36 / 60
	Specific flow rate of domestic hot water (ΔT=30°C)		l/mn	12.2	14.1	18.4
	Quantity of hot water ΔT=25°C		l/mn	14.5	16.8	21.3
	Quantity of hot water ΔT=35°C		l/mn	10.4	12.0	15.2
	Hot water comfort rating (EN13203)		stars	***	***	***
	Hot water minimum flow rate		l/mn	<2	<2	<2
	Domestic hot water max/min pressure		bar	7 / 0.3	7 / 0.3	7 / 0.3
ELECTRICAL	Power supply frequency/voltage		V/Hz	230/50	230/50	230/50
	Total electrical power absorbed		W	110	113	116
	Minimum ambient temperature for use		°C	+5	+5	+5
	Protection level for the electrical appliance		PI	X5D	X5D	X5D
	Weight		kg	32	35	36

	Model: CLAS HE EVO SYSTEM			18 EU	24 EU	30 EU
GENERAL NOTE	CE Certification (pin)			0085CL0440		
	Boiler type			C13(X)-C23-C33(X)-C43(X)-C53(X)-C63(X) C83(X)-C93(X)-B23-B23P-B33		
POWER SPECIFICATIONS	Max/min nominal calorific flow rate (Pci)	Qn	kW	18.0/4.5	22.0/5.5	28.5/6.5
	Max/min nominal calorific flow rate (Pcs)	Qn	kW	20.0/5.0	24.4/6.1	31.1/7.2
	Max/min power output (80°C-60°C)	Pn	kW	17.6/4.4	21.5/5.4	27.3/6.3
	Max/min power output (50°C-30°C)	Pn	kW	19.1/4.7	23.3/5.7	29.7/6.8
	Combustion efficiency (of flue gas)		%	98.0	97.8	97.8
	Nominal calorific flow rate efficiency (60/80°C) Hi/Hs		%	97.6/87.9	97.5/87.8	97.6/87.8
	Nominal calorific flow rate efficiency (30/50°C) Hi/Hs		%	106,1/95.5	105.8/95.3	106.0/95.5
	Efficiency at 30% at 30°C Hi/Hs		%	107.7/97.0	107.7/97.0	107.7/97.0
	Minimum calorific flow rate efficiency (60/80°C) Hi/Hs		%	97.6/87.9	97.6/87.9	97.5/87.8
	Efficiency rating (dir. 92/42/EEC)		stars	****	****	****
	Sedbuk Band / Rating		Band / %	A/90.1	A/90.0	A/90.0
	Loss of burner gas when operating		%	2.0	2.2	2.2
EMISSIONS	Available air pressure		Pa	100	100	100
	NoX class (5 = less than 70mg/kWh		class	5	5	5
	Flue gas temperature (G20) (80°C-60°C)		°C	61	64	64
	CO2 content (G20) (80°C-60°C)		%	9.0	9.0	9.0
	CO content (0%O2) (80°C-60°C)		ppm	93	119	101
	O2 content (G20) (80°C-60°C)		%	4.5	4.5	4.5
	Maximum flue gas flow (G20) (80°C-60°C)		Kg/h	29.7	36.3	46.1
	Excess air (80°C-60°C)		%	27	27	27
HEATING CIRCUIT	Expansion chamber inflation pressure		bar	1	1	1
	Maximum heating pressure		bar	2,5	2,5	2,5
	Expansion chamber capacity		L	6.5	6.5	6.5
	Min/max heating temperature (high temperature range)		°C	35 / 82	35 / 82	35 / 82
	Min/max heating temperature (low temperature range)		°C	20 / 45	20 / 45	20 / 45
DOMESTIC HOT WATER CIRCUIT						
ELECTRICAL	Power supply frequency/voltage		V/Hz	230/50	230/50	230/50
	Total electrical power absorbed		W	106	113	116
	Minimum ambient temperature for use		°C	+5	+5	+5
	Protection level for the electrical appliance		PI	X5D	X5D	X5D
	Weight		kg	32	32	35

ErP Data - EU 813/2013

Model: **CLAS HE EVO**		**24 EU**	**30 EU**	**38 EU**
Condensing boiler	yes/no	yes	yes	yes
Low-temperature boiler:	yes/no	no	no	no
B1 boiler	yes/no	no	no	no
Cogeneration space heater	yes/no	no	no	no
Combination heater	yes/no	yes	yes	yes
Contact details (Name and address of the manufacturer or its authorised representative)		ARISTON THERMO S.p.A. Viale A. Merloni 45 60044 FABRIANO AN - ITALIA		
ErP HEATING				
Power output P_n	kW	22	27	30
Useful heat output at rated heat output and high-temperature regime P_4	kW	21,5	27,3	30,2
Useful heat output at 30 % of rated heat output and low-temperature regime (Return temperature 30°C) P_1	kW	6,5	8,2	9,1
Seasonal space heating energy efficiency η_s	%	93	93	92
Useful efficiency at rated heat output and high-temperature regime (60-80°C) η_4	%	87,9	87,9	87,9
Useful efficiency at 30 % of rated heat output and low-temperature regime (Return temperature 30°C) η_1	%	98,2	97,5	97,3
ErP D.H.W.				
Declared load profile		XL	XL	XL
Water heating energy efficiency η_{wh}	%	85	84	83
Daily electricity consumption Q_{elec}	kWh	0,14	0,14	0,16
Daily fuel consumption Q_{fuel}	kWh	22,8	23,3	23,6
AUXILIARY ELECTRICITY CONSUMPTION				
At full load elmax	kW	0,031	0,033	0,034
At part load elmin	kW	0,017	0,017	0,016
In standby mode P_{SB}	kW	0,004	0,005	0,006
OTHER ITEMS				
Standby heat loss P_{stby}	kW	0,054	0,056	0,057
Ignition burner power consumption P_{ign}	kW	0	0	0
Sound power level, indoors L_{WA}	dB	52	53	53
Emissions of nitrogen oxides NOx	mg/kWh	56	50	45

PRODUCT FICHE - EU 811/2013				
Brand		**ARISTON**		
Model		**CLAS HE EVO**		
		25 EU	**30 EU**	**38 EU**
Declared load profile		XL	XL	XL
Seasonal space heating energy efficiency class		A	A	A
Water heating energy efficiency class		A	A	A
Power output P_n	kW	22	27	30
Annual energy consumption Q_{HE}	kWh	42	53	59
Annual electricity consumption AEC	kWh	32	31	35
Annual fuel consumption AFC	GJ	18	18	19
Seasonal space heating energy efficiency η_s	%	93	93	92
Water heating energy efficiency η_{WH}	%	85	84	83
Sound power level, indoors L_{WA}	dB	52	53	53

ErP Data - EU 813/2013

Model: **CLAS HE SYSTEM EVO**		**18 EU**	**24 EU**	**30 EU**
Condensing boiler	yes/no	yes	yes	yes
Low-temperature boiler:	yes/no	no	no	no
B1 boiler	yes/no	no	no	no
Cogeneration space heater	yes/no	no	no	no
Combination heater	yes/no	no	no	no
Contact details (Name and address of the manufacturer or its authorised representative)		ARISTON THERMO S.p.A. Viale A. Merloni 45 60044 FABRIANO AN - ITALIA		
ErP HEATING				
Power output P_n	kW	18	22	27
Useful heat output at rated heat output and high-temperature regime P_4	kW	17,6	21,5	27,3
Useful heat output at 30 % of rated heat output and low-temperature regime (Return temperature 30°C) P_1	kW	5,3	6,5	8,2
Seasonal space heating energy efficiency η_s	%	92	93	93
Useful efficiency at rated heat output and high-temperature regime (60-80°C) η_4	%	88,0	87,9	87,9
Useful efficiency at 30 % of rated heat output and low-temperature regime (Return temperature 30°C) η_1	%	97,6	98,2	97,5
AUXILIARY ELECTRICITY CONSUMPTION				
At full load elmax	kW	0,036	0,031	0,033
At part load elmin	kW	0,016	0,017	0,017
In standby mode P_{SB}	kW	0,004	0,004	0,005
OTHER ITEMS				
Standby heat loss P_{stby}	kW	0,052	0,054	0,056
Ignition burner power consumption P_{ign}	kW	0	0	0
Sound power level, indoors L_{WA}	dB	52	52	53
Emissions of nitrogen oxides NOx	mg/kWh	46	56	50

PRODUCT FICHE - EU 811/2013				
Brand		**ARISTON**		
Model		**CLAS HE SYSTEM EVO**		
		18 EU	**24 EU**	**30 EU**
Seasonal space heating energy efficiency class		A	A	A
Power output P_n	kW	18	22	27
Annual energy consumption Q_{HE}	kWh	34	42	53
Seasonal space heating energy efficiency η_s	%	92	93	93
Sound power level, indoors L_{WA}	dB	52	52	53

Package fiche

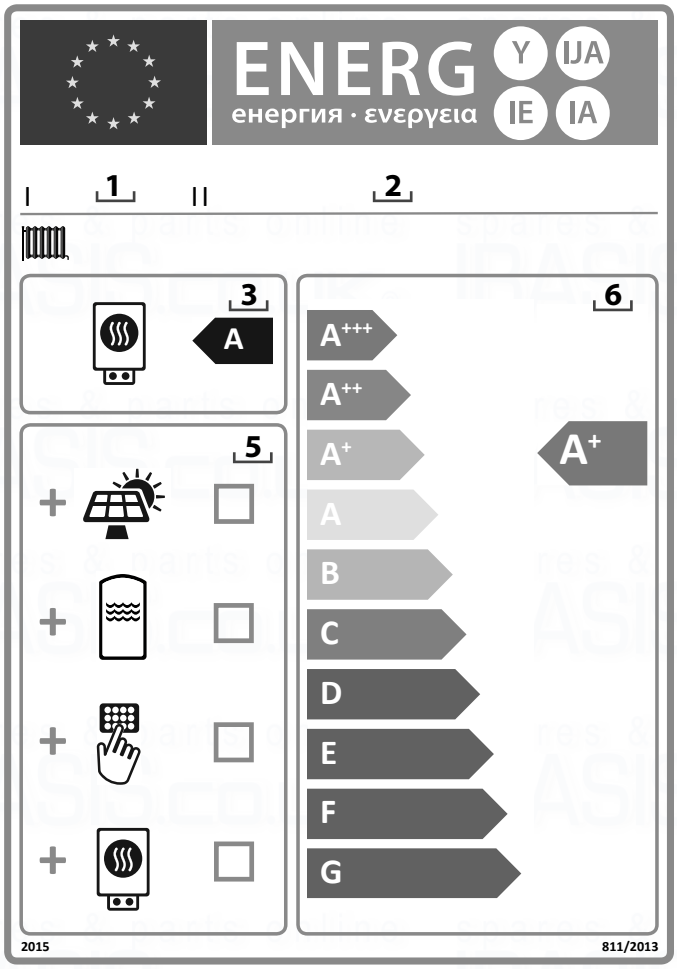

Instructions for filling the label for packages of space heater (or combination heater), temperature control and solar device.

1. supplier's name or trademark;
2. supplier's model identifier;
3. the seasonal space heating energy efficiency class of the space heater, already filled;
4. the seasonal space heating and water heating energy efficiency classes of the combination heater already filled;
5. Indication ✓ of whether a solar collector, hot water storage tank, temperature control and/or supplementary heater, may be included in the package of combination heater, temperature control and solar device;
6. the seasonal space heating energy efficiency class of the package of combination heater, temperature control and solar device, determined in accordance with the figure 1 in the following pages.
   The head of the arrow containing the seasonal space heating energy efficiency class of the package of combination heater, temperature control and solar device shall be placed at the same height as the head of the relevant energy efficiency class;
7. the water heating energy efficiency class of the package of combination heater, temperature control and solar device, determined in accordance with the figure 5 in the following pages.
   The head of the arrow containing the water heating energy efficiency class of the package of combination heater, temperature control and solar device shall be placed at the same height as the head of the relevant energy efficiency class.

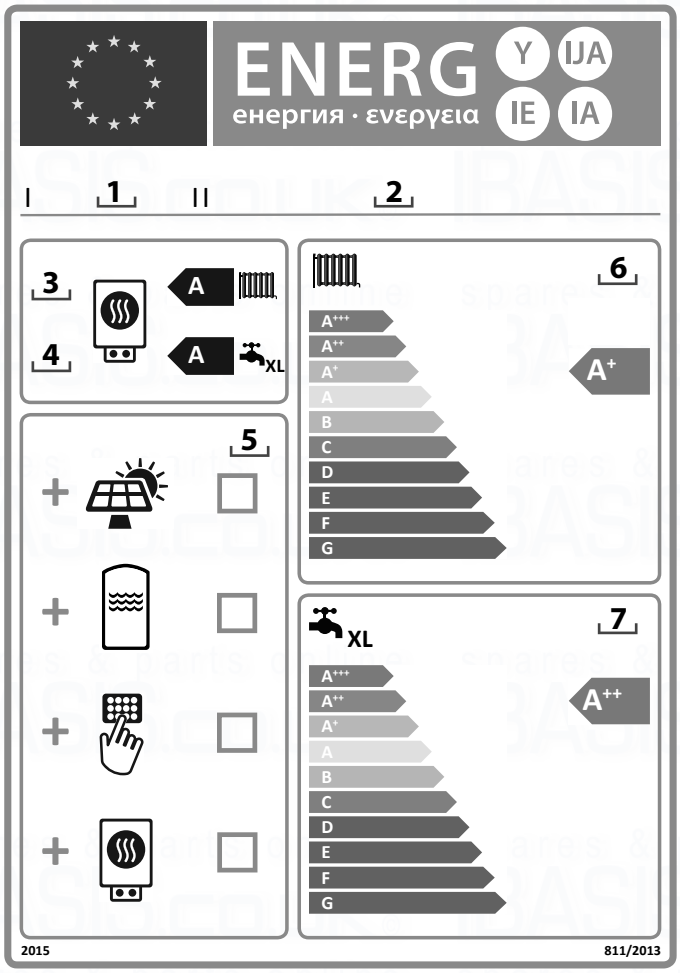

The energy efficiency of the package of products provided for this fiche may not correspond to its actual energy efficiency once installed in a building, as the efficiency is influenced by further factors such as heat loss in the distribution system and the dimensioning of the products in relation to building size and characteristics.

PACKAGES OF COMBINATION HEATER, TEMPERATURE CONTROL AND SOLAR DEVICE

The fiche for packages of combination heater, temperature control and solar device shall contain the elements set out in points (a) and (b):

a) the elements set out in Figure 1, respectively, for evaluating the seasonal space heating energy efficiency of a package of combination heater, temperature control and solar device, including the following information:
   - I: the value of the seasonal space heating energy efficiency of the preferential combination heater, expressed in %;
   - II: the factor for weighting the heat output of the preferential and supplementary heaters of a package (see COMMISSION DELEGATED REGULATION (EU) No 811/2013 - annex IV - 6.a);
   - III: the value of the mathematical expression: 294/(11 · Prated), whereby Prated is related to the preferential combination heater;
   - IV: the value of the mathematical expression 115/(11 · Prated), whereby Prated is related to the preferential combination heater;

in addition, for preferential heat pump combination heaters:
   - V: the value of the difference between the seasonal space heating energy efficiencies under average and colder climate conditions, expressed in %;
   - VI: the value of the difference between the seasonal space heating energy efficiencies under warmer and average climate conditions, expressed in %;

(b) the elements set out in Figure 5 for evaluating the water heating energy efficiency of a package of combination heater, temperature control and solar device, where the following information shall be included:
   - I: the value of the water heating energy efficiency of the combination heater, expressed in %;
   - II: the value of the mathematical expression (220 · Q ref)/Q nonsol , where Q ref is taken from Table 15 in Annex VII of the COMMISSION DELEGATED REGULATION (EU) N. 811/2013 and Q nonsol from the product fiche of the solar device for the declared load profile M, L, XL or XXL of the combination heater;
   - III: the value of the mathematical expression (Qaux · 2,5)/(220 · Qref), expressed in %, where Q aux is taken from the product fiche of the solar device and Q ref from Table 15 in Annex VII of the COMMISSION DELEGATED REGULATION (EU) N. 811/2013 for the declared load profile M, L, XL or XXL.

Figure 1

Seasonal space heating energy efficiency of boiler — ❶ 'I' %

Temperature control
From fiche of temperature control

Class
I = 1%, II = 2%, III = 1,5%, IV = 2%,
V = 3%, VI = 4 %, VII = 3,5%, VIII = 5%

❷ + [ ] %

Supplementary boiler
From fiche of boiler

Seasonal space heating energy efficiency (in %)

([ ] - 'I') x 0,1 = ❸ ± [ ] %

Solar contribution - *From fiche of solar device*

Collector size (in m²) | Tank volume (in m³) | Collector efficiency (in %) | Tank rating
A* = 0,95, A = 0,91,
B = 0,86, C = 0,83, D-G = 0,81

('III' x [ ] + 'IV' x [ ]) x 0,9 x ([ ] /100) x [ ] = ❹ + [ ] %

Supplementary heat pump
From fiche of heat pump

Seasonal space heating energy efficiency (in %)

([ ] - 'I') x 'II' = ❺ + [ ] %

Solar contribution and supplementary heat pump

Select smaller value — 0,5 x ❹ [ ] OR 0,5 x ❺ [ ] = ❻ − [ ] %

Seasonal space heating energy efficiency of package — ❼ [ ] %

Seasonal space heating energy efficiency class of package

G	F	E	D	C	B	A	A+	A++	A+++
< 30%	≥ 30 %	≥ 34 %	≥ 36 %	≥ 75 %	≥ 82 %	≥ 90 %	≥ 98 %	≥ 125 %	≥ 150%

Boiler and supplementary heat pump installed with low temperature heat emitters at 35 °C?
From fiche of heat pump

❼ [ ] + (50 x 'II') = [ ] %

The energy efficiency of the package of products provided for this fiche may not correspond to its actual energy efficiency once installed in a building, as the efficiency is influenced by further factors such as heat loss in the distribution system and the dimensioning of the products in relation to building size and characteristics.

Figure 5

Water heating energy efficiency of combination heater

Declared load profile: ❶ 'I' %

Solar contribution - *From fiche of solar device*

Auxiliary electricity

(1,1 x 'I' - 10%) x 'II' - 'III' - 'I' = + ❷ %

Water heating energy efficiency of package under average climate ❸ %

Water heating energy efficiency class of package under average climate

	G	F	E	D	C	B	A	A+	A++	A+++
M	< 27 %	≥ 27 %	≥ 30 %	≥ 33 %	≥ 36 %	≥ 39 %	≥ 65 %	≥ 100 %	≥ 130 %	≥ 163 %
L	< 27 %	≥ 27 %	≥ 30 %	≥ 34 %	≥ 37 %	≥ 50 %	≥ 75 %	≥ 115 %	≥ 150 %	≥ 188 %
XL	< 27 %	≥ 27 %	≥ 30 %	≥ 35 %	≥ 38 %	≥ 55 %	≥ 80 %	≥ 125 %	≥ 160 %	≥ 200 %
XXL	< 28 %	≥ 28 %	≥ 32 %	≥ 36 %	≥ 40 %	≥ 60 %	≥ 85 %	≥ 131 %	≥ 170 %	≥ 213 %

Water heating energy efficiency under colder and warmer climate conditions

Colder: ❸ - 0,2 x ❷ = %

Warmer: ❸ + 0,4 x ❷ = %

The energy efficiency of the package of products provided for this fiche may not correspond to its actual energy efficiency once installed in a building, as the efficiency is influenced by further factors such as heat loss in the distribution system and the dimensioning of the products in relation to building size and characteristics.

GAS BOILER SYSTEM COMMISSIONING CHECKLIST

This Commissioning Checklist is to be completed in full by the competent person who commissioned the boiler as a means of demonstrating compliance with the appropriate Building Regulations and then handed to the customer to keep for future reference.

Failure to install and commission according to the manufacturer's instructions and complete this Benchmark Commissioning Checklist will invalidate the warranty. This does not affect the customer's statutory rights.

Customer name:	Telephone number:
Address:	
Boiler make and model:	
Boiler serial number:	
Commissioned by (PRINT NAME):	Gas Safe register number:
Company name:	Telephone number:
Company address:	
	Commissioning date:
To be completed by the customer on receipt of a Building Regulations Compliance Certificate*	
Building Regulations Notification Number (if applicable):	

CONTROLS (tick the appropriate boxes)				
Time and temperature control to heating	Room thermostat and programmer/timer		Programmable room thermostat	
	Load/weather compensation		Optimum start control	
Time and temperature control to hot water	Cylinder thermostat and programmer/timer		Combination Boiler	
Heating zone valves	Fitted		Not required	
Hot water zone valves	Fitted		Not required	
Thermostatic radiator valves	Fitted		Not required	
Automatic bypass to system	Fitted		Not required	
Boiler interlock			Provided	

ALL SYSTEMS				
The system has been flushed and cleaned in accordance with BS7593 and boiler manufacturer's instructions			Yes	
What system cleaner was used?				
What inhibitor was used?		Quantity		litres
Has a primary water system filter been installed?	Yes		No	

CENTRAL HEATING MODE measure and record:			
Gas rate	m³/hr	**OR**	ft³/hr
Burner operating pressure (if applicable)	mbar	**OR** Gas inlet pressure	mbar
Central heating flow temperature			°C
Central heating return temperature			°C

COMBINATION BOILERS ONLY				
Is the installation in a hard water area (above 200ppm)?	Yes		No	
If yes, and if required by the manufacturer, has a water scale reducer been fitted?	Yes		No	
What type of scale reducer has been fitted?				
DOMESTIC HOT WATER MODE Measure and Record:				
Gas rate	m³/hr	**OR**	ft³/hr	
Burner operating pressure (at maximum rate)	mbar	**OR** Gas inlet pressure at maximum rate	mbar	
Cold water inlet temperature			°C	
Hot water has been checked at all outlets	Yes		Temperature	°C
Water flow rate			l/min	

CONDENSING BOILERS ONLY		
The condensate drain has been installed in accordance with the manufacturer's instructions and/or BS5546/BS6798	Yes	

ALL INSTALLATIONS							
Record the following:	At max. rate:	CO	ppm	**AND**	CO/CO_2	Ratio	
	At min. rate: (where possible)	CO	ppm	**AND**	CO/CO_2	Ratio	
The heating and hot water system complies with the appropriate Building Regulations						Yes	
The boiler and associated products have been installed and commissioned in accordance with the manufacturer's instructions						Yes	
The operation of the boiler and system controls have been demonstrated to and understood by the customer						Yes	
The manufacturer's literature, including Benchmark Checklist and Service Record, has been explained and left with the customer						Yes	

Commissioning Engineer's Signature
Customer's Signature
(To confirm satisfactory demonstration and receipt of manufacturer's literature)

*All installations in England and Wales must be notified to Local Authority Building Control (LABC) either directly or through a Competent Persons Scheme. A Building Regulations Compliance Certificate will then be issued to the customer.

benchmark COLLECTIVE MARK
THE MARK OF QUALITY FOR THE INSTALLATION, COMMISSIONING AND SERVICING OF DOMESTIC HEATING AND HOT WATER SYSTEMS

© Heating and Hotwater Industry Council (HHIC)

SERVICE RECORD

It is recommended that your heating system is serviced regularly and that the appropriate Service Interval Record is completed.

Service Provider

Before completing the appropriate Service Record below, please ensure you have carried out the service as described in the manufacturer's instructions. Always use the manufacturer's specified spare part when replacing controls.

SERVICE 01					Date:
Engineer name:					
Company name:					
Telephone No:					
Gas safe register No:					
Record:	At max. rate:	CO	ppm	**AND**	CO_2 %
	At min. rate: (Where Possible)	CO	ppm	**AND**	CO_2 %
Comments:					
Signature					

SERVICE 02					Date:
Engineer name:					
Company name:					
Telephone No:					
Gas safe register No:					
Record:	At max. rate:	CO	ppm	**AND**	CO_2 %
	At min. rate: (Where Possible)	CO	ppm	**AND**	CO_2 %
Comments:					
Signature					

SERVICE 03					Date:
Engineer name:					
Company name:					
Telephone No:					
Gas safe register No:					
Record:	At max. rate:	CO	ppm	**AND**	CO_2 %
	At min. rate: (Where Possible)	CO	ppm	**AND**	CO_2 %
Comments:					
Signature					

SERVICE 04					Date:
Engineer name:					
Company name:					
Telephone No:					
Gas safe register No:					
Record:	At max. rate:	CO	ppm	**AND**	CO_2 %
	At min. rate: (Where Possible)	CO	ppm	**AND**	CO_2 %
Comments:					
Signature					

SERVICE 05					Date:
Engineer name:					
Company name:					
Telephone No:					
Gas safe register No:					
Record:	At max. rate:	CO	ppm	**AND**	CO_2 %
	At min. rate: (Where Possible)	CO	ppm	**AND**	CO_2 %
Comments:					
Signature					

SERVICE 06					Date:
Engineer name:					
Company name:					
Telephone No:					
Gas safe register No:					
Record:	At max. rate:	CO	ppm	**AND**	CO_2 %
	At min. rate: (Where Possible)	CO	ppm	**AND**	CO_2 %
Comments:					
Signature					

SERVICE 07					Date:
Engineer name:					
Company name:					
Telephone No:					
Gas safe register No:					
Record:	At max. rate:	CO	ppm	**AND**	CO_2 %
	At min. rate: (Where Possible)	CO	ppm	**AND**	CO_2 %
Comments:					
Signature					

SERVICE 08					Date:
Engineer name:					
Company name:					
Telephone No:					
Gas safe register No:					
Record:	At max. rate:	CO	ppm	**AND**	CO_2 %
	At min. rate: (Where Possible)	CO	ppm	**AND**	CO_2 %
Comments:					
Signature					

SERVICE 09					Date:
Engineer name:					
Company name:					
Telephone No:					
Gas safe register No:					
Record:	At max. rate:	CO	ppm	**AND**	CO_2 %
	At min. rate: (Where Possible)	CO	ppm	**AND**	CO_2 %
Comments:					
Signature					

SERVICE 10					Date:
Engineer name:					
Company name:					
Telephone No:					
Gas safe register No:					
Record:	At max. rate:	CO	ppm	**AND**	CO_2 %
	At min. rate: (Where Possible)	CO	ppm	**AND**	CO_2 %
Comments:					
Signature					

*All installations in England and Wales must be notified to Local Authority Building Control (LABC) either directly or through a Competent Persons Scheme. A Building Regulations Compliance Certificate will then be issued to the customer.

benchmark COLLECTIVE MARK
THE MARK OF QUALITY FOR THE INSTALLATION, COMMISSIONING AND SERVICING OF DOMESTIC HEATING AND HOT WATER SYSTEMS

© Heating and Hotwater Industry Council (HHIC)

spares & parts online
IBASIS.CO.UK

spares & parts online
IBASIS.CO.UK

spares & parts online
IBASIS.CO.UK

ITALIAN DESIGN

Ariston Thermo UK Ltd
Artisan Building
Hillbottom Road
High Wycombe
Bucks HP124HJ
Telephone: 01494 418500

ariston.com/uk

Technical Advice: 0333 240 7777
Customer Service: 0333 240 8777

420010620100 - 0415