Installation & Servicing Instructions

Boiler	G.C No
Q 25S	41-310-08
Q 38S	41-310-09
Q 51S	41-310-10
Q 60S	41-310-11
Q 25C	47-310-10
Q 38C	47-310-11
Q 51C	47-310-12

CE PIN 0063BQ3021

These instructions to be retained by user.

8G.51.40.00/03.06 *Changes reserved.*

Explanations of symbols and signs on the Control Tower display.

Operation indication
(in the first display position by technical read out)

0	No heat requirement
1	Ventilation phase
2	Ignition phase
3	Burner active on central heating
4	Burner active on hot water
5	Fan check
6	Burner off when room thermostat is demanding
7	Pump overrun phase for central heating
8	Pump overrun phase for hot water
9	Burner off because of to high flow water temperature
A	Automatic venting programme

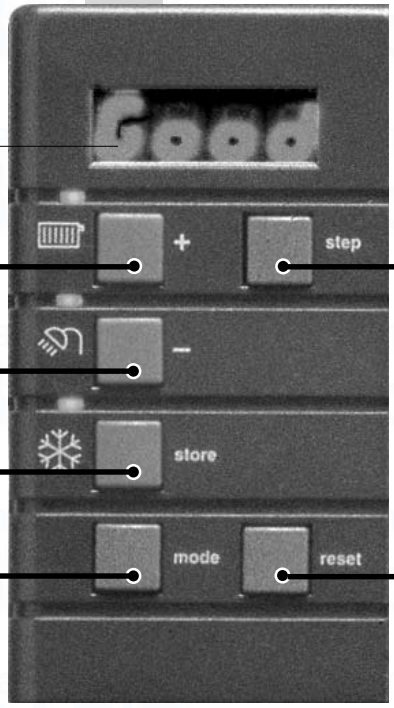

display

Central heating *on / off*

Domestic hot water (DHW) *on / off*

Pump programme *on / off*

Mode key *Selecting chapters*

Step key *Selecting chapters*

Reset key *Unlocking the boiler in case of error*

From Good-read out to Technical read out (and vice versa):
- Press 5 sec. on the STEP key.

FILL

Water pressure is to low (<0,7 bar), FILL indication remains continuously visible, the boiler is taken out of operation. The installation needs to be topped up.

FILL

Water pressure is to low (<1,0 bar), flashing FILL will alternate with indication of water pressure, boiler power of 50% is possible. The installation needs to be topped up.

HIGH

Water pressure is to high (>2,8 bar), if HIGH indication remains continuously visible, the boiler is taken out of operation. The installation pressure needs to be decreased by draining water.

Content

1 Introduction ... 4
2 Regulations ... 4
3 Scope of the supply ... 6
4 Description of the boiler ... 6
5 Mounting the boiler ... 6
5.1 Dimensions ... 7
6 Connecting the boiler ... 9
6.1 Central heating system ... 9
6.2 Expansion vessel ... 11
6.2.1 Expansion vessel module ... 12
6.3 Underfloor heating system (plastic pipes) ... 13
6.4 Gas connection ... 13
6.5 Hot water supply ... 13
6.6 Condensation drain pipe ... 14
6.7 Flue gas exhaust system and air supply system ... 15
6.7.1 Dimensions of the flue gas and air intake duct ... 18
7 External hot water cylinders ... 19
8 Electrical connection ... 20
9 Boiler controls ... 22
9.1 Explanation of the function keys ... 23
10 Filling and venting the boiler and installation ... 24
10.1 Hot water supply ... 24
11 Commissioning the boiler ... 25
11.1 Central heating system ... 25
11.2 Hot water supply ... 25
11.3 Adjustments ... 26
11.4 Activating factory settings (green key function) ... 28
12 Isolating the boiler ... 29
13 Commissioning ... 29
13.1 Checking for contamination ... 29
13.2 Checking of the zero pressure control ... 30
13.3 Checking the CO_2 ... 31
14 Maintenance ... 32
14.1 Frequency of maintenance ... 32
14.2 Maintenance activities ... 33
14.3 Warranty ... 33
15 Technical specifications ... 34
16 Parts of the boiler ... 35
17 Installation examples ... 36
17.1 Radiator installation without thermostatic radiator valves ... 36
17.2 Radiator installation with underfloor heating zone ... 37
18 Error indication ... 38
19 Declaration of conformity ... 39

The appliance should only be installed by a Competent Gas Installer. Work on the boiler must be carried out by a competent person, (Ref: Gas Safety Installation, Use and Regulations) using correctly calibrated instruments with current test certification.

1 Introduction

These instructions describe the functioning, installation, use and primary maintenance of ATAG central heating units for the United Kingdom and Ireland. Where necessary the different regulations for each country are separately described.

These instructions are intended for the use by Corgi registered installers or registered Bord Gais installers in connection with the installation and putting into operation of ATAG units. It is advisable to read these instructions thoroughly, well in advance of installation. Separate instructions for use are supplied with the unit for users of ATAG central heating units. ATAG is not liable for the consequences of mistakes or shortcomings which have found their way into the installation instructions or user's manual. Further, ATAG reserves the right to alter its products without prior notification.

When delivering the unit, give the customer clear instructions concerning its use; present the customer with the user's manual and card.

Each unit is fitted with an identification plate. Consult the details on this plate to verify whether the unit is compliant with its intended location, e.g.: gas type, power source and exhaust classification.

On completion of the installation the installer or commissioning engineer must fill out and complete the Benchmark commission section of the boiler log book and hand to customer or end user for future record keeping. The Benchmark log book must also be filled out and completed by the service agent following each service call, and returned to the customer. A copy of the Benchmark commissioning certificate must be returned to ATAG Heating UK Ltd along with the warranty registration card to register the appliance for the standard warranty benefits

Relevant Installation, Service and User manuals:

- ATAG Cascade — Hydraulic cascade system
- ATAG Monopass — Flue system individual
- ATAG PP Overpressure — Flue system cascade
- ATAG BrainQ — Digital room thermostat
- ATAG MadQ — Cascade-/Zone controller

2 Regulations

The following regulations apply to installation of ATAG central heating units:

Legislation and Regulations.
Gas Safety (Installation and Use). All gas appliances must by law, be installed by a competent person, eg. Members of CORGI and in accordance with the current Gas Safety Regulation. Failure to install appliance correctly could lead to prosecution.

In addition to the above regulations this appliance must be installed in compliance with the current IEE Regulations, the Building Standards (Scotland Consolidation) Regulations. Regulations and bye laws of the Local Water Authority and the Current Health and Safety Regulation.

Ireland:

- Irish standard 813
- Domestic gas installations

The current, Electricity at Work Regulation must be complied with and also be in accordance with the relevant and current editions of the British Standards.

The ATAG Q boiler is a certified appliance and must not be modified or installed in any way contrary to this Installation Manual.
Manufacturers instructions must not be taken in any way as overriding statutory obligations.

The ATAG Q is a central heating unit with an optional integrated hot water function. These units must be connected according to these instructions and all installation norms in respect of the part of the unit to be connected.

Observe the following rules of safety:
- All work on the unit must take place in a dry environment.
- ATAG units may never be in operation without their housing, except in connection with maintenance or adjustments (see Chapter 13 and 14).
- Never allow electrical or electronic components to come into contact with water.

Carry out the following tasks in connection with maintenance, etc. to an already-installed unit:
- Shut down all programmes
- Close the gas tap
- Remove the plug from the wall socket
- Close the stop cock of the unit's intake connection

Take note of the following when maintenance or adjustments are needed:
- The unit must be able to function during these activities; for this reason, the unit's supply voltage, gas pressure and water pressure must be maintained. Ensure that these is not a source of potential danger during these activities.

Following maintenance or other activities; always check the installation of all parts through which gas flows (using leak-search spray).

Following maintenance or other activities, always replace the housing and secure it with the screw behind the door at the front of the casing.

The following (safety) symbols may be encountered in these installation instructions and on the unit:

This symbol indicates that the unit must be stored away from frost.

This symbol indicates that the packaging and/or contents can be damaged as a result of insufficient care taken during transport.

This symbol indicates that, whilst still in its packaging, the unit must be protected from weather conditions during transport and storage.

KEY-symbol. This symbol indicates that assembly or dismantling, must be carried out.

ATTENTION symbol. This symbol indicates that extra attention must be paid in connection with a particular operation.

Useful tip or advice

3 Scope of the supply

The boiler is supplied ready for use. The supply kit is composed as follows:

- Boiler with casing;
- Automatic vent (inside the boiler);
- Safety valve (inside the boiler);
- Suspension bracket
- Draining valve with T-piece;
- Fixing material consisting of plugs and screws;
- Template on the package wrapper;
- Installation instructions
- Operating manual;
- Warranty card;
- Benchmark logbook.

4 Description of the boiler

Room sealed boiler
The boiler retreives its combustion air to outside then discharges the flue gasses to the outside.

Condensing
Retrieves heat from the flue gasses. Water condensates on the heat exchanger.

Modulating
Higher or lower burning according to the heat demand.

Stainless
Super solid kind of steel which keeps its quality for life. It will not rust or erode in contrast to composition materials, like aluminium.

A

The ATAG Q boiler is a room sealed, condensing and modulating central heating boiler, with or without an integrated hot water facility.

The boiler is provided with a compact stainless steel heat exchanger with smooth tubes. A well thought out principal using durable materials.
The boiler burns gas for supplying warmth. The heat is transferred in the heat exchanger to the water in the central heating system. By cooling down the flue gasses condensate is formed. This results in high efficiency. The condensate, which has no effect on the heat exchanger and the function of the boiler, is drained through an internal siphon.

The boiler is provided with an intelligent control system (CMS Control Management System). The boiler anticipates the heat demand of the central heating system or the hot water facility.

When an outside sensor is connected to the boiler works weather dependantly. This means that the boiler control measures the outside temperature and flow temperature. With this data the boiler calculates the optimal flow temperature for the installation.

Explanation of the type indication: ATAG Q 51C

Q = Type
51 = Nominal load in kW
C = Combi (S = Solo)

The boiler has been tested according to valid CE* standards and has a CE* certificate and SEDBUK A-rating.

Statement: No banned materials including asbestos, mercury, CFC's have not or will not be included in the product.

5 Mounting the boiler

The room where the boiler will be placed must always be frost free.

It is NOT necessary to have a purpose provided air vent in the room or internal space in which the boiler is installed. Neither is it necessary to ventilate a cupboard or compartment in which the boiler is installed, due to the extremely low surface temperature of the boiler casing during operation. Therefore the requirements of BS 6798, Clause 12, and BS5440:2 may be disregarded.

The boiler can be mounted practically to any wall with the suspension bracket and the enclosed fixing equipment. The wall must be flat and of sufficient strength in order to be able to carry the boiler weight with its water content.
Above the boiler there must be at least 250 mm working space in order to be able to fit a coaxial flue system or a twin supply. On the left side of the boiler at least 50 mm and on the right side 10 mm must be reserved to allow fitting or removing of casing. The location of the boiler can be determined by using the template located inside the boiler packaging.

Lift the boiler only by the boilers rear wall

Lifting and carrying precautions:
- Lift only a manageable weight, or ask for help.
- When lifting the boiler, bend the knees, and keep the back straight and feet apart.
- Do not lift and twist at the same time.
- Lift and carry the boiler close to the body.
- Wear protective clothing and gloves to protect from any sharp edges.

5.1 Dimensions

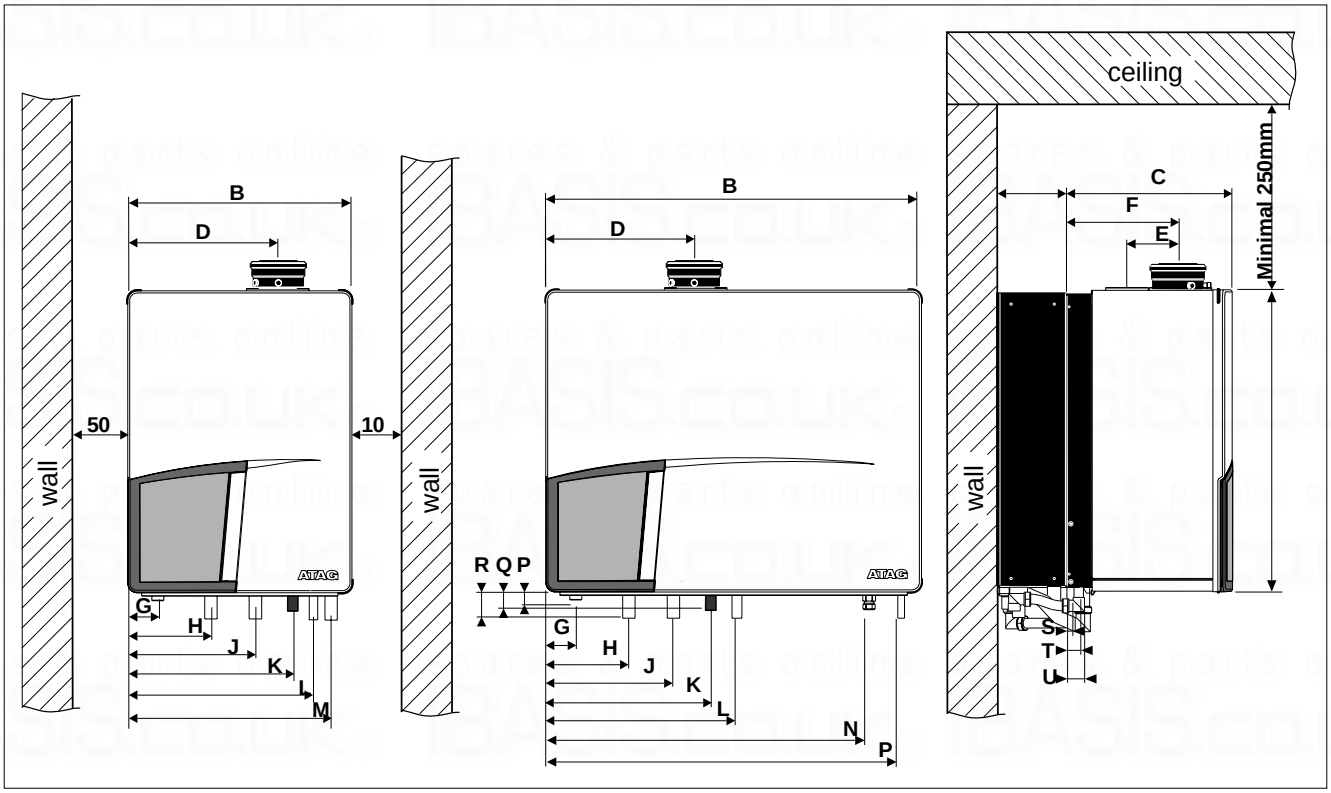

dimensions (in mm) figure 1

Boiler type	Solo		Combi	
	Q25S Q38S	Q51S Q60S	Q25C Q38C	Q51C
	mm	mm	mm	mm
A Height	680	680	680	680
B Width	500	660	840	1000
C Depth	385	385	385	385
D Left side / flue gas exhaust	335	495	335	495
E Centre to centre / flue gas exhaust and supply	120	120	120	120
F back / flue gas exhaust	270	270	270	270
G Left side / gas pipe	65	65	65	65
H Left side / flow pipe	185	185	185	185
J Left side / return pipe	285	445	285	445
K Left side / condensate pipe	370	530	370	530
L Left side / expansion pipe	430		430	590
M Left side / return pipe DHW	475			
N Left side / cold water pipe			725	885
O Left side / hot water pipe			795	955
P Pipe length of g*	18	18	18	18
Q Pipe length of c*	50	50	50	50
R Pipe length of f, r, e, d, k and w*	60	60	60	60
S Back / Centre of pipe c*	25	25	25	25
T Back / Centre of pipe g*	40	40	40	40
U Back / Centre of pipe f, r, e, d, k and w*	50	50	50	50

dimensions talel 1

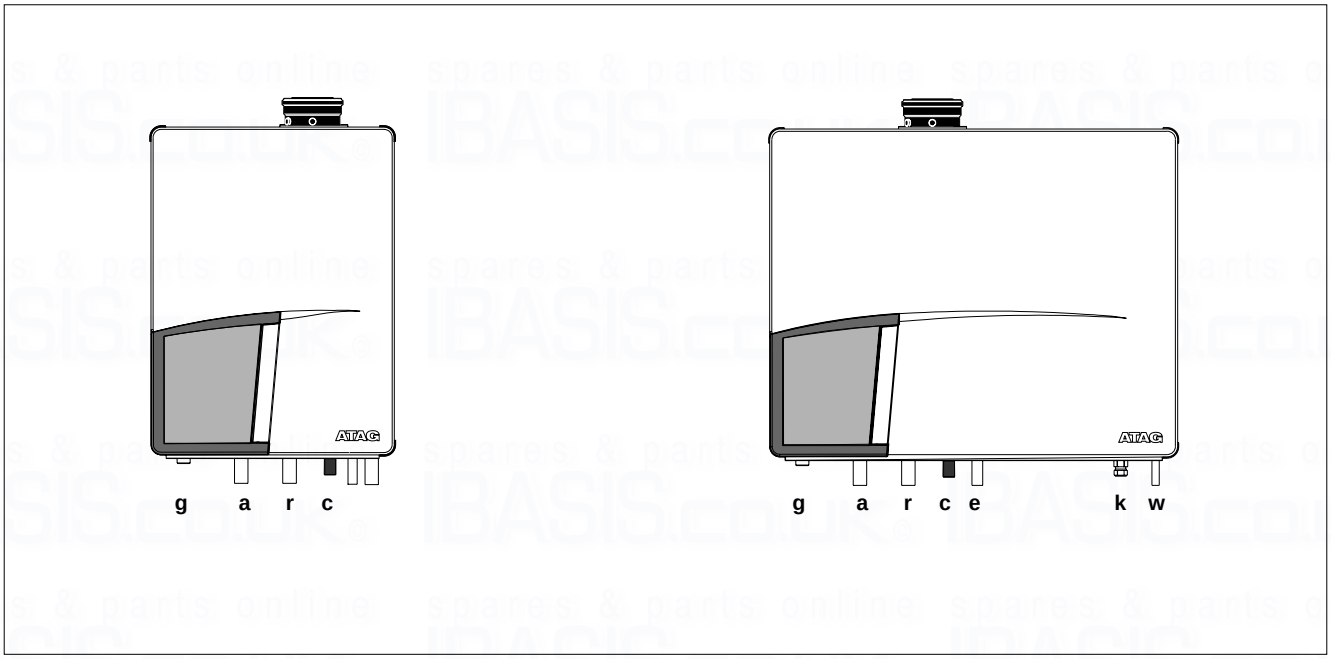

boiler connections figure 2

Boiler type		Solo		Combi	
		Q25S Q38S	Q51S Q60S	Q25C Q38C	Q51C
Combustion air supply / flue gas system	mm	80/125	80/125	80/125	80/125
Gas pipe - g		½" female	¾" female	½" female	¾" female
Flow pipe - f	mm	28	35	28	35
Return pipe - r	mm	28	35	28	35
Condensate pipe - c	mm	24	24	24	24
Expansion pipe - e	mm			22	22
Cold water pipe - k	mm			15	15
Hot water pipe - w	mm			15	15
Return pipe DHW - d	mm	28			

connection diameters table 2

6 Connecting the boiler

The boiler has the following connection pipes;

- The central heating pipes.
  These can be connected to the installation by means of compression fittings;
- The gas pipe.
  It is provided with a female thread into which the tail piece of the gas valve can be screwed;
- The condensation drain pipe.
  It consists of an oval 24 mm plastic pipe. The drain pipe can be connected to this by means of an open connection. If the open connection is fitted in a different location, then the pipe can be lengthened by means of a 32 mm PVC sleeve;
- The flue gas exhaust system and air supply system.
  It consists of a concentric connection 80/125 mm.
- Cold and hot water pipes.
  Only Combi boilers: *These consist of 15 mm copper pipe and can be connected to the installation by means of compression fittings.*

It is recommended that isolation valves are fitted to all heating and hot water connections to facilitate ease of future maintenance.

It is advisable to spray-clean all of the unit's connecting pipes and/or to spray-clean/blow-clean the installation before connecting it to the unit.

6.1 Central heating system

Connect the central heating system according to the actual regulations.

The boiler pipes can be connected to the installation by means of compression fittings. Reducers should be used for connecting to thick-walled pipe (welded or threaded).

When removing the plastic sealing caps from the pipes, contaminated testing water may be released.

The boiler has a self-adjusting and self-protecting control system for the load and the pump capacity. By this means the temperature difference between the flow and return water is checked. Table 3 shows the water displacement which supplies the circulation pump at certain installation resistance.

	Boiler type	pump type	water flow rate		permissible installation resistance	
		UPER	l/min	l/h	kPa	mbar
Combi	Q25C	20-60	16,2	972	29	290
	Q38C	20-70	24,6	1478	20	200
	Q51C	20-70	30,1	1803		
Solo	Q25S	20-60	9,7	583	47	470
	Q25S	20-60	16,2	972	32	320
	Q38S	20-70	24,6	1478	22	220
	Q51S	20-70	30,1	1803		
	Q60S	20-70	38,9	2333		

Installation resistance table 3

A low velocity header must be connected to the Q51C, Q51S and Q60S to prevent flow problems over the boiler.
ATAG supplies the AA1OV09U Low velocity header for 1 boiler. This can be connected directly under the boiler on the flow and return pipe.

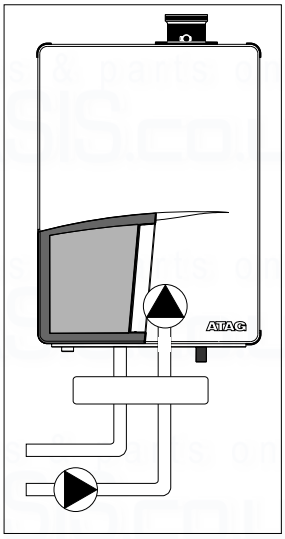

external installation pump
with low velocity header
figure 3

If the installation resistance is higher than the stated value the pump will rotate at maximum pump capacity and the load will be adjusted until an acceptable temperature difference between flow and return water has been obtained. If, after this, the temperature difference remains to much then the boiler will switch itself off and wait until an acceptable temperature has arisen.
If an unacceptable temperature is detected, then the control will repeatedly try to achieve water flow, and if this does not work then the boiler will switch off.
If the capacity of the boiler pump is insufficient, an extra external pump can be installed in combination with a low velocity header in series with the boiler. The electrical side of this external circulation pump can be connected in the Control Tower, by which means this pump switches at the same times as the boiler pump.
The maximum absorbed current consumption of the external circulation pump may be 230 W (1 Amp). The extra external pump must be selected according the installation resistance and required flow.

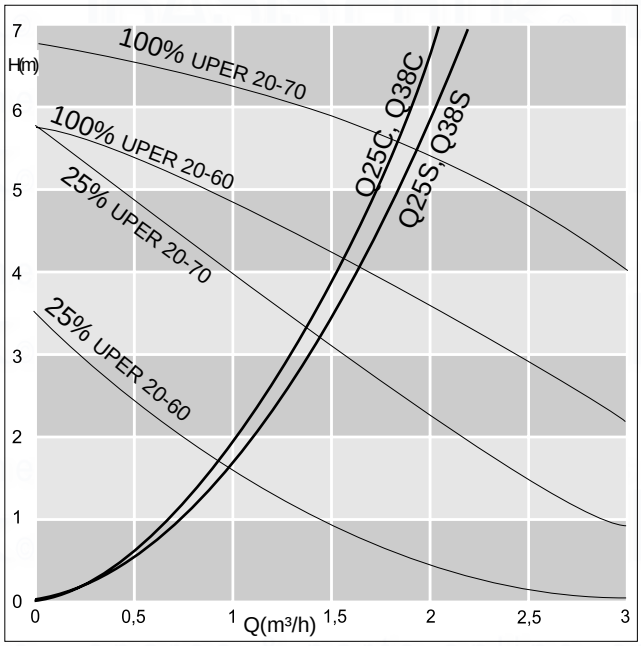

pump index lines graph 1

As standard the boiler is provided with a water filter in the return pipe of the boiler. With this, possible contamination of the central heating water is prevented from ending up in the boiler. The boiler is also provided with an internal safety valve set at 3 bar. This is connected to the waste discharge together with the condensation discharge.

If all, or a large part of the radiators are provided with thermostatic radiator valves it is advisable to use a pressure difference control (bypass) in order to prevent flow problems in the installation.

The boiler is designed to be used on sealed system only.

Additives in the installation water are only permitted in consultation with the country distributor.

When using more than one boiler in an installation please refer to the cascade installation instructions.

6.2 Expansion vessel

The central heating system must be provided with an expansion vessel. The expansion vessel which is used should be geared to the water content of the installation. The pre-charge pressure depends on the installation height above the mounted expansion vessel. See table 4.

installation height above the expansion vessel	pre-charge pressure of the expansion vessel
5 m	0,5 bar
10 m	1,0 bar
15 m	1,5 bar

choice of expansion vessel table 4

All Combi boilers are provided with an expansion vessel connection. This pipe is connected with the three way valve and boiler pump. This prevent the expanding water, during hot water production, is being closed off from the expansion vessel, when the thermostatic radiator valves are fully closed. A second expansion vessel in the installation is not a problem.
The Solo boilers Q15S, Q25S and Q38S are provided with an expansion vessel connection. When this boiler is combined with a cylinder, the expansion vessel connection is included in the internal piping of the cylinder circuit, to which the expansion vessel can be connected.

In connection with correct functioning of the boiler it is necessary for the expansion vessel to be connected to the expansion vessel pipe of the boiler.

The Solo boilers Q51S and Q60S are not provided with an expansion vessel connection. When one of these Solo boilers is combined with a cylinder then one has to take into account that the expansion vessel should be connected between the three-way valve and the boiler circulation pump.

6.2 Expansion vessel module

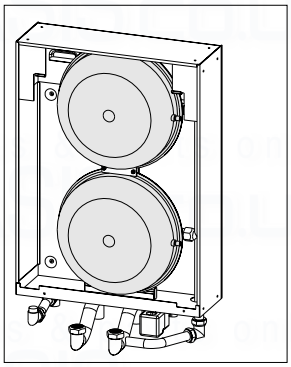

expansion vessel module
figure 4

The ATAG Q25S and Q38S boilers can be provided with an expansion vessel module. By this means the external expansion vessel is not required. This expansion vessel module is placed behind the ATAG Q boiler, by which means the expansion vessel is not noticeable. The content of the two expansion vessels is 20 litres. The pre-charge pressure is 1 bar.

The expansion vessel module can be supplied with the necessary pipes to connect with the ATAG Q boiler. The connecting pipes for the installation correspond with those of the boiler and have the same centre-to-centre distance to the wall.
When checking the expansion vessels these are accessible via the left, right and upper sides. From these sides the tanks are also removable and the boiler does not have to be dismantled.
The space which is required for mounting the expansion vessel module corresponds with the required space for mounting an ATAG Q boiler. They included template and mounting strip for the boiler which can be used for the expansion vessel module. The boiler is fitted on to this after the expansion vessel module has been mounted. The necessary mounting strip for the boiler is present on the module.
Article numbers:

- the expansion vessel module without pipe connections AA1EM09U
- pipe connections for expansion vessel module AA1LE04U

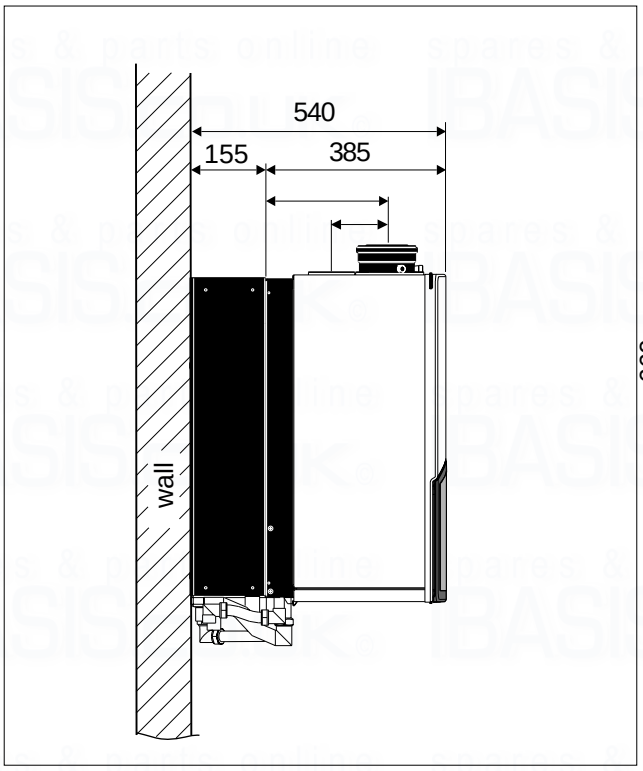

side view of the module with boiler (dimensions in mm) figure 5

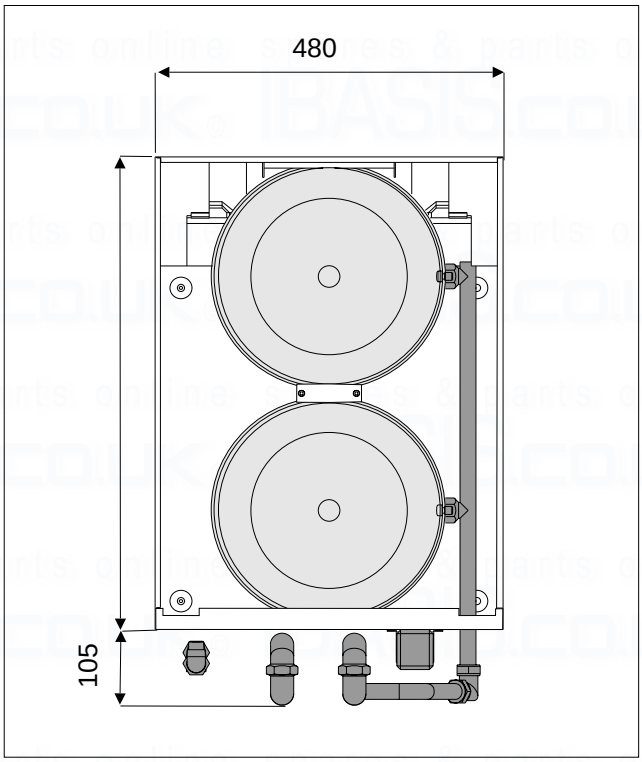

front view of the module with boiler (dimensions in mm) figure 6

6.3 6.3 Underfloor heating system (plastic pipes)

When connecting or using an underfloor heating system, designed with plastic pipes, or plastic pipes are used elsewhere in the installation,one should ensure that the plastic pipes used comply with the DIN 4726/4729 standard. It is set out in this standard that the pipes may not have oxygen permeability higher than 0.1 g/m³.d at 40°C. If the system does not comply with this DIN standard, the underfloor heating component will have to be separated from the central heating appliance by means of a plate exchanger.

No recourse can be made to the terms of the warranty in the event of failure to observe the regulations pertaining to plastic underfloor heating pipes.

6.4 Gas connection

The appliance pipe is fitted with an internal thread, into which the tail piece of the gas tap can be screwed.

United Kingdom:
The gas supply must comply to the current Gas Safety Regulations.

Ireland:
- Irish standard 813
- Domestic gas installations

The connection to the appliance must include a suitable method of disconnection and a gas control cock must be installed adjacent to the appliance for isolation purposes. The nominal inlet working gas pressure measured at the appliance should be 20 mbar for Nat gas (G20).

Make sure that the gas pipe work does not contain dirt, particularly with new pipes.

When the boiler has to be converted from natural gas to LPG, ATAG provides special kits for this purpose. Special instructions are supplied with the kit.

Always check the installation of all of the parts through which gas flows (using leak-search spray)

6.5 Hot water supply

Connection of the drinking water installation should be done according to the national water laws.

The sanitary water pipes can be connected to the installation by means of compression fittings. The cold water inlet on the Combi boilers must be provided with the following (counted in the water flow direction):
Dosing valve (supplied), Safety group, Expansion vessel 6bar (potable water, blue).

A dosing valve must be fitted in the cold water pipe. The dosing valve ensures that a quantity of water is supplied which has a guaranteed outlet temperature of 60°C (assuming a cold water temperature of 10°C). The quantity of water is virtually unaffected by the water pressure.

With a water pressure lower than 1.5 bar it is advisable to remove the inside mechanism of the dosing valve.

6.6 Condensation drain pipe

ATAG boilers produce condensate. This condensate must be drained otherwise the boiler will not function.

The collecting condensation drain pipe should be connected to the drain by means of an open connection. By this means the possibility of drain gases ending up in the boiler is prevented. The drain connection should have a minimum diameter of 32mm.

Connect the condensation drain pipe according to the actual regulations.

The following components are connected to the collective condensation drain pipe:

- Condensation discharge;
- Safety valve;

Draining of the condensation water to the external rain guttering is not permitted in view of the danger of freezing.

Before putting the boiler into operation fill the siphon with 300 ml of water.

The condensate pipe must be run using suitable corrosion resistant materials (eg. plastic).

6.7 Flue gas exhaust system and air supply system

The flue gas exhaust system and air supply system consists of:
- Flue gas pipe;
- Air supply pipe;
- Roof or wall terminal.

The flue gas exhaust system and air supply system must comply with:

United Kingdom:
The flue gas outlet and air supply installation must comply with the current regulation requirements. IG UP 10 and BS 715.

Ireland:
- Irish standard is 813 section 9.10.1

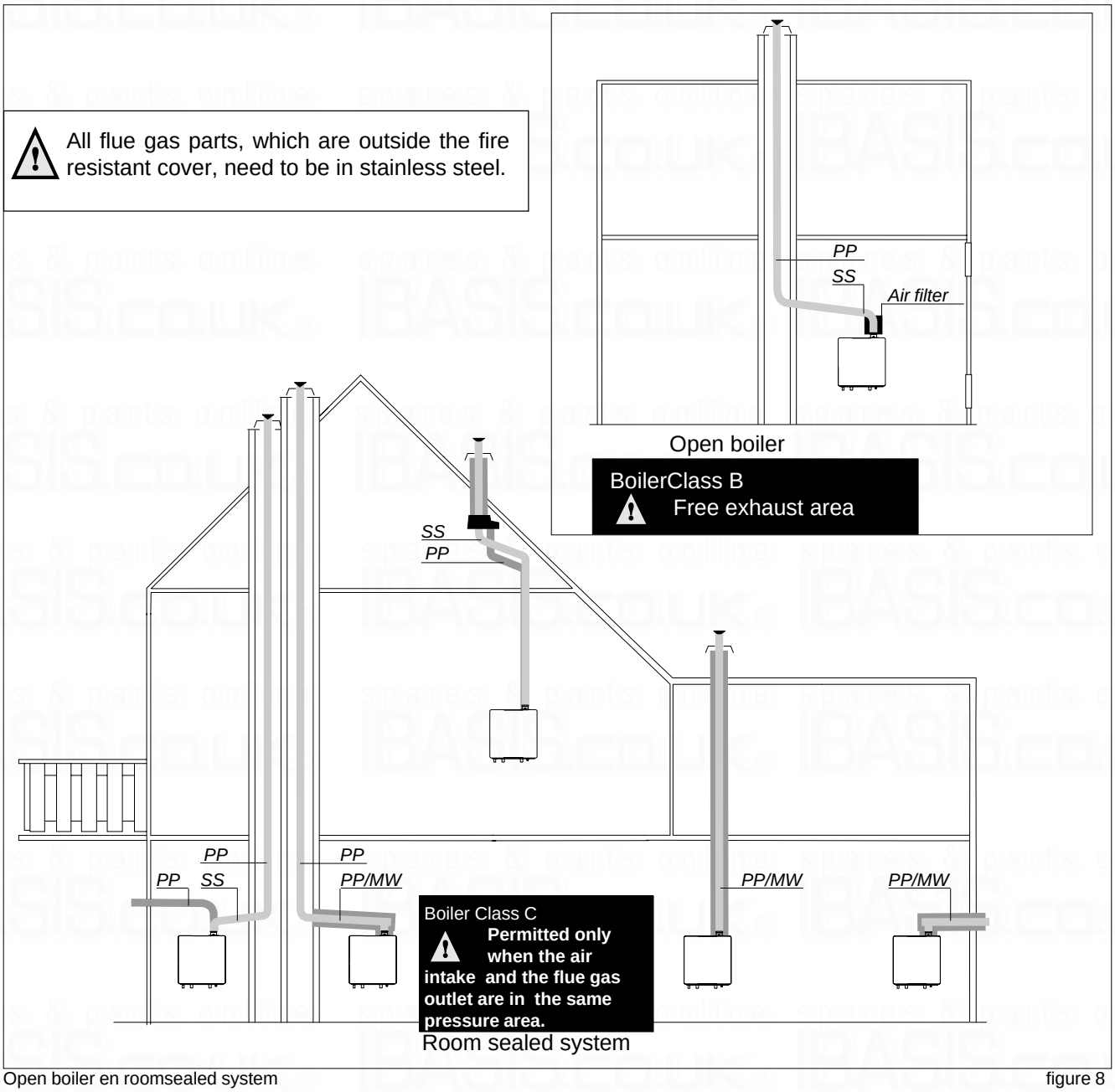

Open boiler en roomsealed system

figure 8

The appliance connection diameter is 80/125 mm, to which the flue gas outlet and air supply system can be fitted, with or without elbow pieces. The maximum permissible pipe length is set out in Table 5.
It is also possible to use a parallel pipe connection of 2x 80mm. In this case a seperate cover 125mm should be ordered. Art.nr. S4323410.

We advise to build a simple flue gas system and air supply system out of table 6. For further information about the available components of the flue gas and air supply system we recommend you consult the Monopass Flue systems.

The ATAG flue gas system is meant and designed solely the use on ATAG central heating boilers adjusted for Nat gas or LPG. The maximum flue gas temperatures are below 70°C (full load 80/60°C)
The proper operation can be influenced harmfully by changes of or adjustments to the correct set up.
Possible warranty claims will not be honoured if incorrect changes result in non compliance with the installation manual or local rules and regulations.

The flue gas systems described in this document are solely suited for ATAG central heating boilers of the ATAG boiler range. For this purpose the CE Certificate has been supplemented under the Gastec nr: 0063BQ3021, 0063AS3538 and 0063AU3110.
The flue gas system should be built up using only ATAG program products. Combinations with other brands or systems are without written permission from ATAG Heating is not permitted.

Horizontal flue system should always be installed sloping towards the boiler, in order to avoid condensate lying in the flue system.
The minimum gradient is 50mm/Mtr. With the condensate running back to the boiler the risk of ice forming at the terminal is reduced.

The terminal should be located where dispersal of combustion products is not impeded and with due regard for the damage or discolouration that might occur to building products in the vicinity (see fig 9).

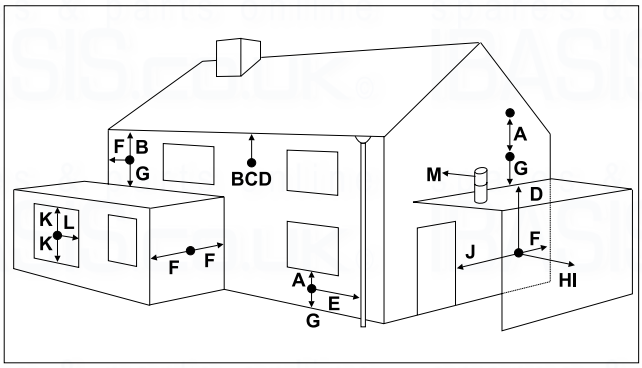

figure 9

	terminal position for fan assisted boiler		minimum distance
A	directly below an open window or other opening (e.g. air brick)	mm	300
B	below gutters, soil pipes or drain pipes	mm	75
C	below eaves	mm	200
D	below balconies or car port roof	mm	200
E	from vertical drain pipes and soil pipes	mm	75
F	from internal or external corners	mm	300
G	above ground or below balcony level	mm	300
H	from a surface facing a terminal	mm	600
I	from a terminal facing a terminal	mm	1200
J	from an opening in the car port (e.g. door window) into dwelling	mm	1200
K	vertically from a terminal on the same wall	mm	1500
L	horizontally from a terminal on the same wall	mm	300
M	horizontally from a vertical terminal to a wall	mm	300

Dimensions table 6

In certain weather conditions condensation may also accumulate on the outside of the air inlet pipe. Such conditions must be considered and where necessary insulation of the inlet pipe may be required.
In cold and/or humid weather water vapour may condense on leaving the flue terminal. The effect of such 'plumeing' must be considered.

The terminal must not be located in a place where it is likely to cause a nuisance.
For protection of combustibles, refer to IS 813 section 9.10.1. where the terminal is less than 2m (6.6ft) above a pavement or platform to which people have access (including) any balcony or flat roof the terminal must be protected by a guard of durable material.
A suitable guard is available from the country distributor.

Where a terminal is fitted below a window which is hinged at the top, and where the hinge axis is horizontal, and the window opens outwards, the terminal shall be 1m below the bottom of the window opening.

If the boiler is to be located under stairs, a smoke alarm meeting the requirements of I.S. 409 or equivalent must be fitted.

The flue must be terminated in a place not likely to cause a nuisance.

For horizontal sections, the outlet system should always be fitted on an incline (50 mm/m) sloping down towards the appliance so that no condensation water is able to accumulate in the outlet system. The chances of icicles forming on the roof outlet is minimised by causing the condensation water to run back towards the appliance. In the case of horizontal outlets the inlet system should be fitted on an incline sloping down towards the outside to prevent rainwater from coming in.

The appliance produces a white wisp of condensation (plumeing). This wisp of condensation is harmless, but can be unattractive, particularly in the case of outlets in outside walls.

At this time there are 2 different ways of connecting the flue gas/air intake system. The flue gas duct for the 60/100, 80/125 and 100/150 are push fit connections, see figure 10.
The air intake for the 60/100 is a clamp ring connection.
These two types are not interchangeable.

Cutting the pipe goes as follows:
- Take out the inner tube by turning it until it releases from its security position;
- Cut just as much from the air intake part as from the flue gas part;
- Take off the burrs from the cutting edge to prevent cutting the seals;
- Click the pipes back together again.

Use special grease to simplify the fitting

When mounting the flue gas system, pay attention to the flow direction. An arrow on the product points this out. It is not permitted to mount a system upside down and will lead to complaints.

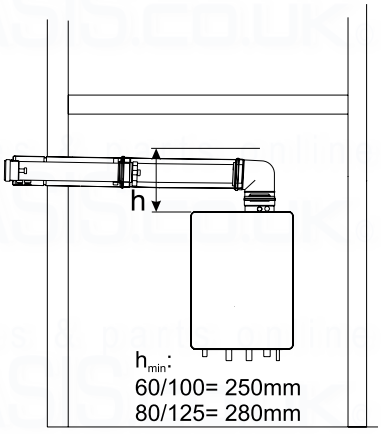

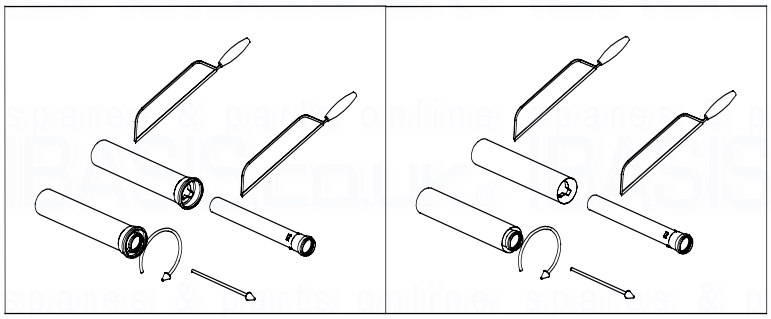

Dismantlement and shorten pipes *figure 11*

6.7.1 Dimensioning of the flue gas and air intake duct

The flue diameter is determined by the total length of the run, including for the connection pipe, elbows fittings and terminal covers etc and the type and number of boilers installed into the system.

An undersized flue pipe can lead to disorders. Look at table 1 for the choice of the system and the correct diameter. The table below shows the maximum flue lengths with the different boiler outputs. A longer flue gas length can be achieved by increasing the diameter to ø 100mm.

Example:
A 25kW with a concentric flue gas system ø80/125mm has according to the table a maximum flue straight length of 31m In the system that is going to be put in there are 2 x 45° bends, so the maximum flue gas length is 40 – (2 x 1.1) = 37.8 meters.

Explanation table 1:
Two pipe flue gas system: maximum noted length = distance between boiler and roof terminal A
Concentric flue gas system: maximum noted length = distance between boiler and roof terminal B

When using bends the noted value behind every bend should be deducted from the maximum straight length.

Pipes with 60/100 diameter are only permitted on wall terminals in combination with ATAG boilers untill 25kW.

Two pipe flue system + chimney lining

	ø80mm	A in m	ø100mm	A in m
16-25 kW	**Maximum straight lenth 80**	**31**	**Maximum straight lenth 100**	**40**
	87° bend resistance length	**-1,5**	87° bend resistance length	-1,8
	45° bend resistance length	**-0,8**	45° bend resistance length	-0,9
26-38 kW	**Maximum straight lenth 80**	**18**	**Maximum straight lenth 100**	**39**
	87° bend resistance length	-1,5	87° bend resistance length	-1,8
	45° bend resistance length	-0,8	45° bend resistance length	-0,9
39-60 kW	**Maximum straight lenth 80**	**6**	**Maximum straight lenth 100**	**18**
	87° bend resistance length	-1,5	87° bend resistance length	-1,8
	45° bend resistance length	-0,8	45° bend resistance length	-0,9

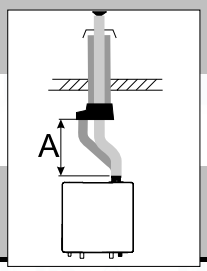

Concentric flue system

	ø60/100mm	B in m	ø80/125mm	B in m	ø100/150mm	B in m
16-25 kW	**Maximum straight lenth 60/100**	**12**	**Maximum straight lenth 80/125**	**31**	**Maximum straight lenth 100/150**	**40**
	87° bend resistance length	-1	87° bend resistance length	-2,8	87° bend resistance length	-2,6
	45° bend resistance length	-1	45° bend resistance length	-1,1	45° bend resistance length	-1,1
26-38 kW			**Maximum straight lenth 80/125**	**13**	**Maximum straight lenth 100/150**	**34**
			87° bend resistance length	-2,8	87° bend resistance length	-2,6
			45° bend resistance length	-1,1	45° bend resistance length	-1,1
39-60 kW			**Maximum straight lenth 80/125**	**6**	**Maximum straight lenth 100/150**	**10**
			87° bend resistance length	-2,8	87° bend resistance length	-2,6
			45° bend resistance length	-1,1	45° bend resistance length	-1,1

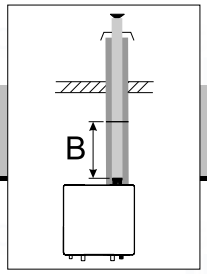

Dimensions flue gas system and air supply system — Table 5

7 External hot water cylinders

Depending of the comfort preferences different external hot water cylinders can be connected to the boiler. The choice of the cylinder depends on the coil output. The coil output must comply with the boiler output.

A cylinder which is used in combination with a Q 51S or Q 60S, should have a minimal capacity of 40 kW resp. 45kW (minimal ø28mm coil). The maximum permitted pressure drop is respectively 20 and 10 kPa at a flow of respectively 1417 and 1587 l/h.
See installation example 16.2 on page 37 for the hydraulic connection.

8 Electrical connection

The appliance complies with the CE Machinery Directive 89/392/EEC. The EC Low Voltage Directive 72/23/EEC and the EC EMC Directive 89/336/EEC.
A 230V -50Hz mains electrical supply is required fused externally at 5A.

The installation must continue to comply with:
United Kingdom:
- the national rules for electrical installations.

Ireland:
- the ECTI national rules for electrical installations

The appliance must be connected to an earthed socket. this must be visible and within reach.

The following general stipulations also apply:
- No changes may be made to the wiring of the appliance;
- All connections should be designed in accordance with the enclosed regulations.;
- Should it be necessary to change it, the mains power supply cable may only be replaced with an ATAG mains power supply cable (item No. S4407300).

The ATAG room thermostat and controls must be connected to their allocated connections. All other types or makes of room thermostats or controls which are used must have a Volt free contact.

When using an on/off thermostat or control, it is possible that an anticipating resistance must be installed in order to prevent too high temperature fluctuations. As a standard rule this means mercury thermostats. This resistance wire is present in the Control Tower and must be connected to clamps 23 and 27. The anticipating resistance in the room thermostat has to be set at 0.11 A.

For more detailed questions regarding the components which are not supplied, the country distributor should be contacted.

Connection terminalQ

230 V~ Power Supply			230 V~ External Pump			230 V~ External Controller			230 V~			8G.35.22.02	Calorifier connection three-way valve				DHW sensor		Outside sensor		Brain Smart		Room therm. On / Off		External safety contact		24 V~ 100 mA	
⏚	N	L	⏚	N	L	⏚	N	L	⏚	N	L		CH	DHW	N						A	B						
1	2	3	4	5	6	7	8	9		10	11		12	13	14	15	16	17	18	19	20	21	22	23	24	25	26	27
mains power supply			230 Volts for external pump			230 Volts for external control			230 Volts				internal or external three-way valve motor and cylinder sensor						ATAG outside sensor		ATAG room thermostat		On/off thermostat or control (Volt free)		External safety contact		24 Volts maximum 100 mA	

Connection terminal *figure 10*

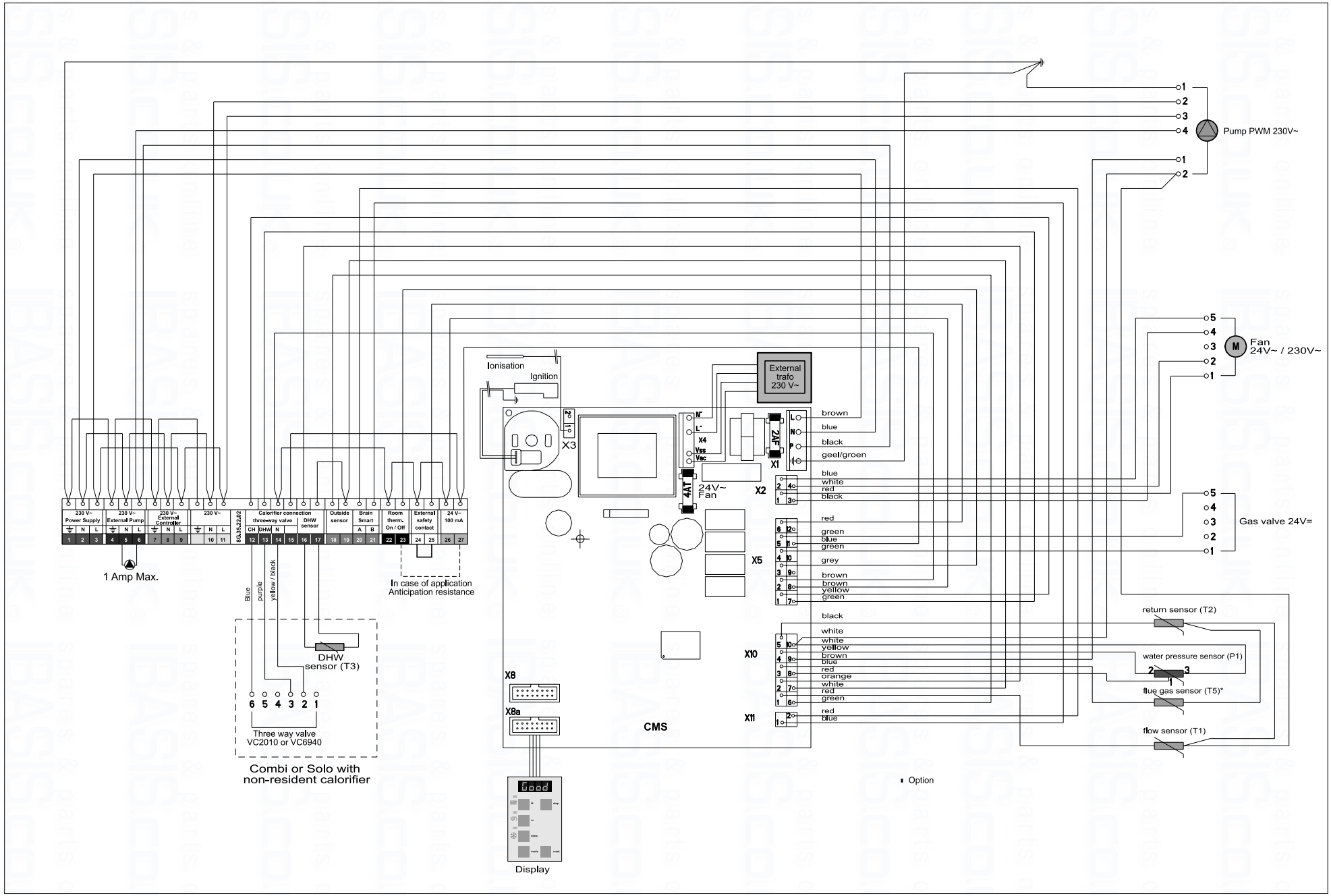

electrical diagram

figure 11

9 Boiler controls

The boiler is provided with a fully automatic microprocessor control, called CMS Control Management System. This control simplifies operation by undertaking all major control functions. Initially when power to the unit is switched on it will remain on standby. There is no indication Led on, untill one of the programme keys is pressed. The control panel display will show the relevant state. When the installation is empty the display will show FILL.
The various parameters can be called up in two ways:

The Good-state or standard read out

The first way shows a simple display read out.
The boiler in operation will always show 'Good'. When a message is necessary this will be shown instead of Good.

Technical read out

The second way is a technical read out. In normal situations the following will be shown:

- on the left the status in which the boiler is active;
- on the right the flow temperature;
- the water pressure in the installation.

When a message (error or blocking code) is necessary this will be shown instead of the technical read out..

To switch over from the Good-state to the Technical read out (and vice versa):
- Press 5 sec. on the STEP-key.

When the system has been filled the automatic venting program starts, when a programme has been selected, by pressing the key for Central Heating, DHW or pump programme (, of). The programme takes 17 minutes and stops automatically. After this the unit will function normally. (See also 'Filling and venting the boiler and installation).

On a call for heating or hot water the control system will select the required water control temperature. This water temperature is called the T-set value. On a call for central heating the boiler ignites first at low input. The input is then changed slowly to match the load required. The boiler operates in this way to avoid excessive water noises and temperature overshoot. On a call for hot water supply the T-set value of central heating return water temperature is monitored. Depending on the amount of sanitary water which is withdrawn from the DHW cylinder, the central heating return water temperature, from which the input is adjusted, will vary.

9.1 Explanation of the function keys

- Central Heating programme key.
  Switching the Central Heating on or off (Led on/off);

- Hot Water programme key.
  Switching the Domestig Hot Water (DHW) facility on or off (Led on/off);

- PC programme key.
  adjusts the pump to continuous water circulation in the central heating system (Led on), or according to the pump overrun times on the relevant programs (Led off);

When the pump is switched on continuously it can lead to undesired heating up of the central heating system during the summer.

- **Mode-key.**
  After briefly pressing, a selection of the data chapters can be retrieved.
  After pressing for 5 seconds it is possible to enter the code as described in chapter 11.3;
- **Step-key.**
  After briefly pressing, the water pressure can be retrieved and pages per chapter can be retrieved.
  After pressing for 5 seconds it switches from the Good-state to technical read out and vice versa;
- **Reset-key.**
  After briefly pressing, for:
  - unlocking errors;
  - ending the access code;
  After pressing for 5 seconds an operating stop is made, for example, for activating the automatic venting programme.

Some keys have other functions.These functions are only active when according to the procedure described in chapter 11.3, adjustment has to be changed or data must be retreived from the CMS.
The other functions are:

- Central Heating programme key : + function;
- Hot Water programme key: - function;
- PC programme key : store-function, which means that by means of this key a modified setting is confirmed;
- Step-key: scrolling in a data chapter.

10 Filling and venting the boiler and installation

The central heating installation needs to be filled with potable water. For filling or topping up the installation you use the filling loop according to the following procedure:

1 Switch on the power supply;
2 The diplay will show FILL;
3 All functions off (heating, DHW and pump);
4 Push briefly the 'STEP'-button: P x.x = water pressure in bar;
5 Open the filling loop (Indication on display increases);
6 Fill up slowly to 1.5 to 1.7 bar;
7 STOP appears on the display;
8 Close the filling loop;
9 De-aerate the complete installation, start at the lowest point;
10 Check the water pressure and if necessary top it up;
11 Close the filling loop;
12 Activate the functions in use (heating, DHW and/or pump);
13 If A xx appears on the display, wait for 17 minutes;
14 Check the water pressure and if necessary top it up to 1,5 to 1,7 bar
15 Close the filling loop;
16 Press the 'STEP'-button;
17 Be sure that the filling loop is closed.
18 After the automatic de-aeration programm (A xx) is finished the boiler will return to the Good state or Technical read out.

Check the water pressure regularly and top up the installation when necessary.
The working pressure of the installation should be between 1.5 and 1.7 bar when the installation is cold.

It can take a while before all air has disappeared from a filled installation. Especially in the first week noises may be heard which indicate the presence of air. The automatic air vent in the boiler will make this air disappear, which means the water pressure can reduce during this period and therefore topping up with water will have to be done.

10.1 Hot water supply

Apply the water pipe pressure to the cylinder (open main valve and/or stop valve of the safety group).

Vent the cylinder and the hot water installation by opening a hot water tap. Leave the tap open for as long as required until all air has disappeared from the cylinder and the pipes and only water is flowing from the tap.

11 Commissioning the boiler

Before the boiler is fired, ensure that the boiler and the system are well vented and free of air. Purge the gas line between the gas meter and the boiler and carry out a gas soundness test as specified in the current Gas Safety Regulations.
The boiler does not require adjustment of the burner pressure and air quantity because it is self adjusting and is factory set at the correct value.

11.1 Central Heating system

Provided there is a heat requirement from the thermostat or control, the central heating programme will be put into operation by means of the key (central heating programme). The circulation pump will start circulating and the boiler will start the burner.

11.2 Hot water supply

Provided there is a heat requirement from the cylinder the hot water programme will be put into operation by means of the key (hot water programme).

11.3 Adjustments

When the boiler is installed it is in principal ready for use. All adjustments of the boiler control are already pre-programmed for a heating system with radiators/convectors with a flow temperature of 85°C. The adjustments are described in the Parameter chapter on page 28.
In certain cases adjustment have to be altered in case of :

- Lower flow temperature
- More boilers in Cascade, i.e..

Read through the Parameter chapter to adjust the boiler to its installation.
Contact ATAG Heating in case of doubt.

Please follow next procudere to alter adjustments:

Altering adjustments

STEP 1 **Press the Mode-key for 5 secondss.**
The display shows COdE followed by an arbitrary number;

STEP 2 **Press by means of the + or the - key until the code C123 is shown;**

STEP 3 **Press the STORE-key to confirm the code (code blinks1 x).**

Now you have acces to the installer level. There are 4 chapters:

- PARA *Parameters*
- INFO *Information chapter (no adjustments possible)*
- SERV *Service chapter*
- ERRO *Error-chapter (no adjustments possible)*

The content of the chapters is described on the following pages.

STEP 4 **Press briefly the MODE-key to select one of the 4 chapters, i.e. PARA;**

STEP 5 **Press once or more briefly on the STEP-key to select a Parameter**
(parameter visible on the left, value on the right) ;

STEP 6 **Alter the value, if necessary/possible, by means of the + or the - key**

STEP 7 **Press briefly on the STORE-key to confirm the alteration.**
When you have to change more values, repeat from step 5.

STEP 8 **Press once or more on the MODE-key until StBY or Good is shown:**
After a few seconds the text StBY will be replaced by the technical read-out or Good-state (Depending from the position the acces code is keyed in)

When you want to return from an arbitrary position to the original read out press once or more on the MODE-key until StBY is shown.

When during 20 minutes no single key is used the display will return automatically to its original read-out (Good state or technical read out)

Parameter chapter

PARA	Factory	Description	Range
1	85°C	maximum flow temperature CH	20 - 90°C
2*	01	type of CH installation:	
		radiators; air heating; convectors: *T max. flow 85°C; K factor heating line 2.3; gradient 5°C/min; gear differential 6°C*	01
		radiators with large surface areas or underfloor heating as additional heating: *T max. flow 70°C; K factor heating line 1.8; gradient 5°C/min; gear differential 5°C*	02
		under floor heating with radiators as additional heating: *T max. flow 60°C; K factor heating line 1.5; gradient 4°C/min; gear differential 4°C*	03
		full under floor heating: *T max. flow 50°C; K factor heating line 1.0; gradient 3°C/min; gear differential 3°C*	04
3	max.	maximum power CH in kW	min-max
4*	00	control principal with on / off thermostat:	
		100 % on / off thermostat	00
		100 % on / off weather dependant	01
5*	2.3	heating line K-factor (see also heating line graph)	0.2 - 3.5
6*	1.4	heating line exponent (see also heating line graph)	1.1 - 1.4
7*	-10	heating line climate zone (see also heating line graph)	-20 - 0
10*	0°C	fine adjustment heating line day temperature	-5 until 5°C
11*	0°C	fine adjustment heating line night temperature	-5 until 5°C
14	5	gradient speed	0 - 15
15*	0	booster after night reduction:	
		no	00
		yes	01
23	-3°C	frost safety temperature	-20 until 10°C
31	63°C	switch-off temperature of additional cylinder with Q boiler	40 - 80°C
36	0	type of three-way valve	
		VC 2010 / VC 8010 / VC 8610	00
		VC 6940 modulating	01
43	max.	maximum power DHW in kW	min-max
45	0	Not applicable	00 - 01
48	25% (50%)	minimum pump capacity (Value in parenthesis for Q60S)	25-100 %
49	100%	maximum pump capacity CH	40-100 %
89	00	address setting interface:	
		Spare	-01
		ATAG Bus thermostat (BrainQ, Smart)	00
		boiler 1 - 8 in cascade	00 - 07

Information chapter

INFO	Value	Description
1	°C	flow water temperature T1
4	°C	return water temperature T2
5	°C	DHW temperature T3
7	°C	outside temperature T4
8	°C	flue gas temperature T5
16	%	actual power in %
17	kW	actual power in kW
18	kW	actual load in kW
20		indication bus communication
21	GJ	consumption total in GJ (.. x 33 = .. m3)
22	GJ	consumption CH in GJ (.. x 33 = .. m3)
23	GJ	consumption DHW in GJ (.. x 33 = .. m3)
24	hour	total number of burner run hours
25	hour	number of burner run hours CH
26	hour	number of burner run hours DHW
32	hour	total number of hours counter
37	hour	total number of run hours pump CH and DHW
46	hour	within how many hours is service required

Service chapter			
SERV	**Value**	**Description**	**Range**
1	OFF	boiler in operation with burner function on	OFF - max.
2	OFF	fan adjustable and burner off	OFF - max.
3	OFF	pump adjustable with burner on	OFF - max.
4	OFF	showroom position ON = active and OFF = non active	ON - OFF

Error chapter		
ERRO	**Value**	**Description**
Err.L - Err.5		Last saved error until 5 last predecessing errors
1		error code
2		operation status boiler
3	°C	flow water temperature T1
4	°C	return water temperature T2
5	kW	load
6	%	pump capacity

Parameter-, Info-, Service- and Error-chapters Table 6

*** Most of the data in this table can be requested by the BrainQ. Most of the adjustments which are stated in this table are unnecessary when in combination with the ATAG BrainQ thermostat and will be taken care of by the BrainQ itself and do not have to be adjusted. For further information regarding to the BrainQ thermostat we refer to the ATAG BrainQ installation manual.**

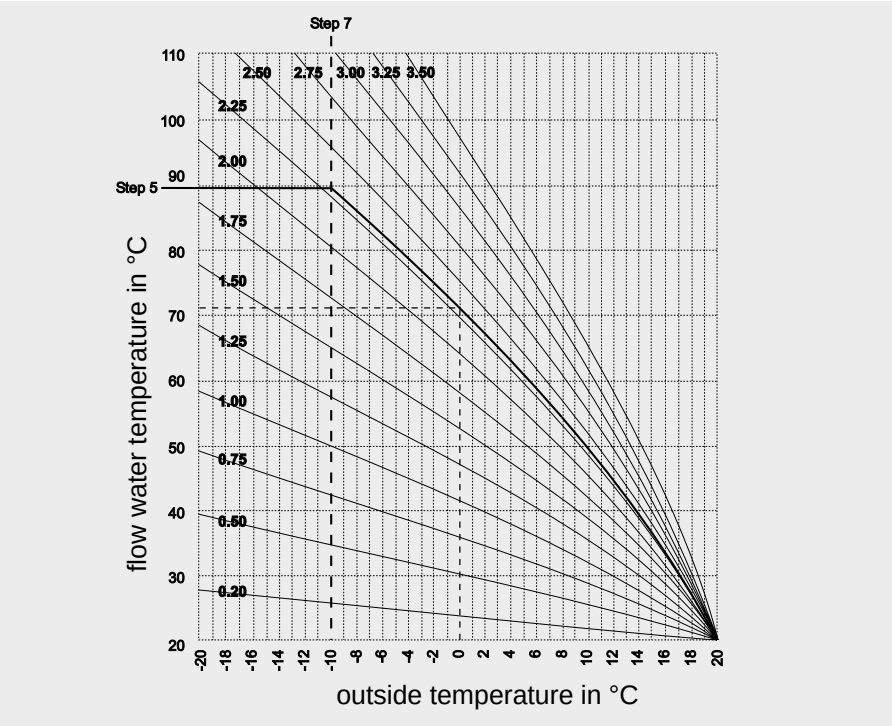

heating line adjustments Parameter Step 6 and 7 graph 2

11.4 Activating factory settings (green key function)

To activate the factory settings again please follow the next procedure (Note: all altered adjustments will be set back):

- Select, when necessary, the technical read out;
- Select with the MODE-key chapter PARA;
- Press the STORE-key.
  The word "Copy" will appear and the facory settings are active again.

12 Isolating the boiler

In some situations it may be that the entire boiler must be switched off. By switching off the three keys with the lamps for central heating, hot water and pump programme (, or), the boiler is switched off. Leave the plug in the wall socket, which means the circulation pump and the three-way valve are activated once every 24 hours in order to prevent jamming.

In the event of frost danger it is advisable to drain the boiler and/or the installation.

13 Commissioning

Work on the boiler must be carried out by a competent person, (Ref: Gas Safety Installation, Use and Regulations) using correctly calibrated instruments with current test certification.

To commission the boiler the casing has to be removed. The casing is locked with a screw behind the door on the front and the top of the casing is hooked behind a locking edge. After removing this screw the casing must be lifted at the bottom by which means it is released from the locking edge. Then the casing can be removed forward.

The boiler settings, such as burner pressure and adjustment of the air quantity are unnecessary, due to the fact that the boiler operates with a so-called zero pressure control. This means the correct gas quantity is controlled by the suction operation of the fan. The fine adjustment which is carried out at the factory is once-only, which means that adjusting of these values is unnecessary. Only in case of replacing of the gas valve, venturi and/or fan the zero pressure and the incorrect CO2 adjustment has to be checked and, if necessary, adjusted at the right value.

Always check the installation of all parts through which gas flows (using leak-search spray)

13.1 Checking for contamination

Check point contamination
figure 12

In order to be able to check the boiler for contamination in the following running years it is advisable to measure the maximum air displacement in the boiler when putting the boiler into operation. This value can be different with each type of boiler.

In order to be able to measure this value follow the next procedure:

- Press the MODE-key for 5 seconds.
- The diplay will show COdE followed by an arbitrary number;
- Select by means of the + or the - key the code C123;
- Press the Store-key to confirm the code (code blinks 1 x);
- Press the MODE-key until SERV is shown;
- Press the STEP-key until 2 is shown;
  alternately 2 and OFF will be shown.

- Turn the upper measuring nipple on the gas valve open (fig. 12);

- Connect the hose of the digital pressure gauge to the upper measuring nipple of the gas valve

- Press the + key until the maximum value is achieved;
  The fan will function to its maximum revolutions (burner stays off)

- Measure the under pressure and write down this value.
  At the next commissioning visit this value may drop 20% of its original value on the moment of intallation. When this value is dropped more than 20% the boiler needs maintanance.

- Press the - key until OFF is shown (keep key pressed)
  With this the procedure is finished.

13.2 Checking of the zero pressure control

The zero pressure control is set at the factory. To measure this value you need a difference pressure gauge with a range of +0,2 to -0,8 mbar. Follow the next procedure:

- Press the MODE-key for 5 seconds.

- The diplay will show COdE followed by an arbitrary number;

- Select by means of the + or the - key the code C123;

- Press the Store-key to confirm the code (code blinks 1 x);

- Press the MODE-key until SERV is shown;

- Press the STEP-key once until 1 is shown;
  alternately 1 and OFF will be shown.

Check point contamination
figure 13

- Turn the upper measuring nipple on the gas valve open (fig. 13);

- Connect the hose of the digital pressure gauge to the upper measuring nipple of the gas valve

- Press the - key until the minimum value is achieved;
  The fan will function to its minimum revolutions (burner is active)

- Measure the negative pressure. Value should be +/- 0 to -4Pa (+/- 0 to -0,04 mbar).

- If the zero pressure deviates too much:
  - Remove black cover of the gas valve
  - Remove cap with Torx key (fig. 14)
  - Turn slightly the Torx screw behind the cap:
    Turn left is positive pressure deviation
    Turn right is negative pressure deviation

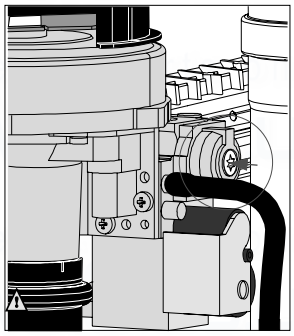

Adjustment zero pressure
figure 14

- Ending this procedure is done by pressing the Reset key.

- Proceed by checking the incorrect CO2 value and correct it if necessary.

13.3 Checking the CO_2

The CO_2 percentage is factory-set. This has to be checked at commissioning, maintance and faults.

This can be checked by means of the following procedure:
- Remove the black cover of the gas valve by unscrewing the sealed screw.
- Put the boiler into operation and take care that it can deliver its heat;

Tip: If there is no demand for heat on CH, turn the hot water tap completely open and measure the incorrect CO_2.

- Press the MODE-key for 5 seconds.
- The diplay will show COdE followed by an arbitrary number;
- Select by means of the + or the - key the code C123;
- Press the Store-key to confirm the code (code blinks 1 x);
- Press the MODE-key until SERV is shown;
- Press the STEP-key once until 1 is shown;
  alternately 1 and OFF will be shown.
- Calibrate the CO_2 meter ;
- Place the lance of the CO_2 meter into the check point (see fig. 15);
- Press the + key until the maximum value (in kW) is achieved;
  The boiler will burn on full load (value on display in kW)
- Check Table 7 for the correct CO_2 percentage (page 35)
- Let the CO_2 meter do its measuring procedure.
- Adjust, if necessary, the adjustment screw to correct the CO_2 value (see fig. 16).

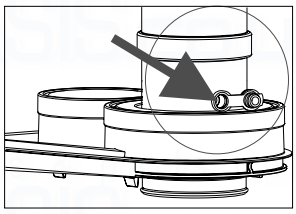

checkpoint CO_2
figure 15

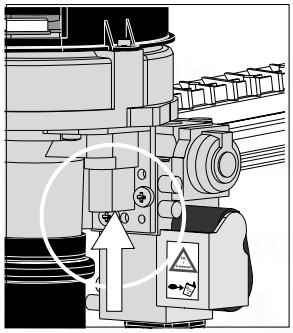

adjustment screw CO_2
figure 16

Ending the CO_2 measuring procedure:
- Press the - key until OFF is shown (keep key pressed).
  With this the procedure has ended..
- Replace the black cover on the gas valve and fix it with the screw.

14 Maintenance

Maintenance or changes to the unit may only be carried out by an authorised technician.

14.1 The frequency of maintenance

We advise that an inspection is carried out every year with an overhaul every three years, depending from the running hours mentiond in the warranty conditions. When doing this the circumstances of the boiler's location must be taken into account. From this one can determine whether to deviate from this advice.
Please contact the country distributor for further guidance on the frequency and service requirements.

14.2 Maintenance activities

To carry out the maintenance activities please follow the next procedure:
- switch off the power supply;
- remove the screw behind the door on the front of the casing;
- Lift the casing and remove it towards the front.

<u>The air box</u>
- remove the transparant air box;
- clean the box with a cloth with a simple (non-abrasive) cleaning agent;

<u>The fan unit and burner cassette</u>
- remove the electrical connection plug from the gas valve and fan motor;
- loosen the nut of the gas pipe under the gas valve;
- replace the gasket by a new one;
- loosen the front cross head screw of the black plastic silencer;
- after this turn the two clamping rods ¼ turn and remove them by pulling them forward. Note the right turning direction (red indicator);
- slightly lift the fan unit and remove it towards the front of the heat exchanger;
- remove the burner cassette out of the fan unit;
- check the burner cassette on wear, pollution and possible cracks. Clean the burner cassette with a soft bruch and vacuum cleaner. If burners are cracked replace the complete burner cassette;
- replace the gaskets between burner and fan unit and the gasket between fan unit and heat exchanger;
- check the venturi and the gas-air distribution plate for pollution and clean this part, if necessary with a soft brush and vacuum cleaner. If the air box contains a lot of dirt it is plausible that the fan itself is dirty as well. To clean this, the fan has to be removed from the hood and the venturi. Clean the fan with a soft brush and a vacuum cleaner. Replace the gasket and ensure that all gaskets of the fan parts are mounted correctly.

<u>Heat exchanger</u>
- check the heat exchanger for contamination. Clean this if necessary with a soft brush and a vacuum cleaner. Prevent dirt falling down into the heat exchanger.
  Flushing the heat exchanger from the top down is not permitted

Refitting of the components is done in reverse order.

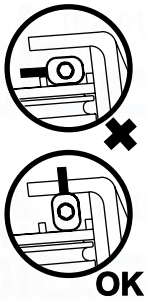

Make sure that during refitting the clamping rods they are put in the right position. They should be turned vertical.

Ignition electrode

The replacement of the electrode is only necessary when the electrode is worn off. This can be checked by measuring the ionisation current. The minimum ionisation current has to be higher the 4µA on full load.
If the viewing glass is damaged the complete electrode must be replaced.
Replacement goes as follows:

- remove the electrical connections of the electrode;
- press the clips on both sides of the electrode to both sides and remove the complete electrode;
- remove and replace the gasket;

Refitting of the components is done in reverse order.

Siphon and condensate tray

- first remove the condensate cup;
  Check this for pollution. If there is no sign of strong pollution it is not necessary to clean the condense tray. If there is a strong pollution in the cup it is necessary to remove and clean the condensate tray;
- remove the inner siphon pipe which remains in the condensat tray;
- check the O-rings of the cup as well as those from the pipe and replace if necessary;
- clean both part by flushing it with clean water;
- grease the O-rings again wit acid free O-ring grease to make fitting easier;
- if there is a leak at the siphon cup or tray the complete siphon unit has to be replaced by S4451610;
- remove the plug from the flue gas sensor if present;
- turn the two short clamping rods ¼ turn and remove them by pulling them forward; Note the right turning direction (red indicator);
- lift the flue gas pipe out of the condensate tray;
- press the condensate tray carefully downwards and remove it by pulling it forward;
- replace the gasket between condensate tray and heat exchanger by a new one;
- clean the condensate tray with water and a hard brush;
- check the condensate tray on leaks.

Refitting is done in reverse order.
Note thate the gasket of the condensate tray seals completely.

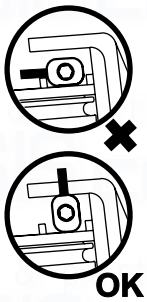

Make sure that during refitting the clamping rods they are put in the right position. They should be turned vertical.

Replace always all removed gaskets of dismanteled parts during the maintenance activities.

Put the boiler into operation and check the CO_2 (see page 32).

14.3 Warranty

For warranty conditions we refer to the warranty card supplied with the boiler.

15 Technical specifications

Boiler type		ATAG Q-Serie						
		Combi			Solo			
		Q25C	Q38C	Q51C	Q25S	Q38S	Q51S	Q60S
Input Hs CH	kW	25	38	51	25	38	51	60
Q_n Input Hi CH	kW	22,5	34,2	45,9	22,5	34,2	45,9	54
Q_{nw} Input Hi DHW		31,5						
Efficiency class according BED		★★★★	★★★★	★★★★	★★★★	★★★★	★★★★	★★★★
Efficiency according EN677 (36/30°C part load, Hi)	%	109,7	109,1	109,3	109,7	109,1	109,3	109,3
Efficiency according EN677 (80/60°C full load, Hi)	%	97,5	97,4	97,3	97,5	97,4	97,3	97,3
Modulation range CH (capacity 80/60°C)	kW	6.0 - 21.9	6.0 - 33.3	8.8 - 44.7	4.4 - 21.9	6.0 - 33.3	8.8 - 44.7	8.8 -52.5
Modulation range CH (capacity 50/30°C)	kW	6.8 - 23.9	6.8 - 36.3	9.8 - 48.7	4.9 - 23.9	6.8 - 36.3	9.8 - 48.7	9.8 - 57.3
Nox class EN483		5						
CO_2	%	9						
Flue gas temp. CH (80/60°C on full load)	°C	68	69	70	68	69	70	70
Flue gas temp. CH (50/30°C on low load)	°C	31						
Gas consumption G20 CH (DHW) (at 1013 mbar/15°C)	m^3/h	2,38 (3,33)	3,62	4,86	2,38	3,62	4,86	5,71
Electr. power consumption max.	W	106	165	150	106	165	150	168
Electr. power consumption stand by	W	10						
Current	V/Hz	230/50						
Fuse rating	A	5						
Degree of protection acc. EN 60529		IPX0D						
Weight (empty)	kg	79	79	89	50	53	64	64
Width	mm	840	840	1000	500	500	660	660
Height	mm	680						
Depth	mm	385						
Water content CH	l	5	5	7	3,5	5	7	7
Water content DHW	l	14	14	14				
After run time pump CH	min	5						
After run time pump DHW	min	1	1	1				
P_{MS} Water pressure min./max.	bar	1/3						
P_{MW} Water pressure DHW max.	bar	8						
Flow temperature max.	°C	85						
Pump type	UPER	20-60	20-70	20-70	20-60	20-70	20-70	20-70
Available pump height CH	kPa	29	20		32	22		
Label		Sedbuk A rate						
DHW flow (at 38°C)	l/min	13,4	16,6	23,2				
DHW flow (at 60°C)	l/min	7,5	9,3	13				
DHW temperature (T_{in}=10°C)	°C	60	60	60				
CE product identification number(PIN)		0063BQ3021						

Technical specifications Table 7

16 Parts of the boiler

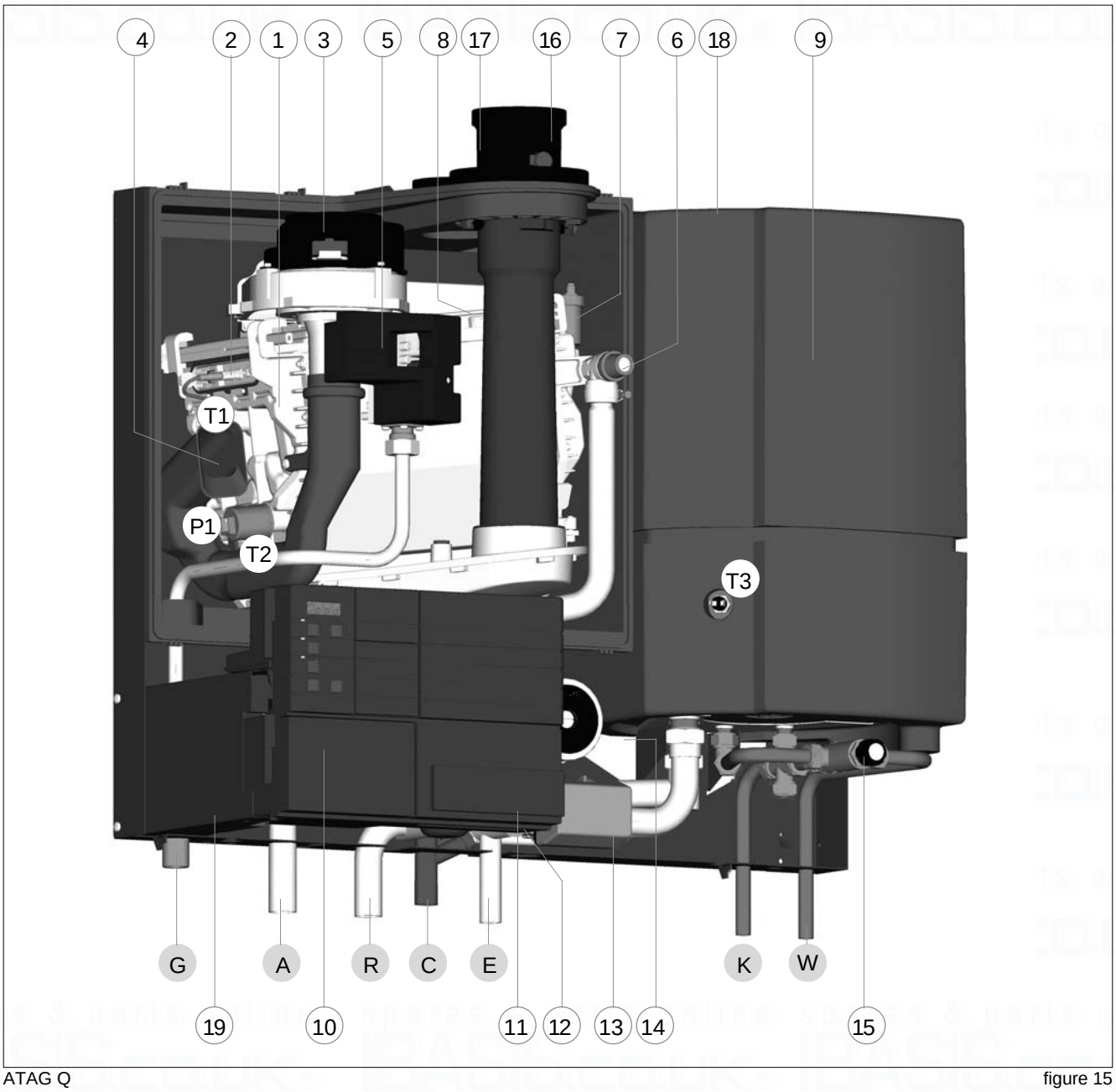

ATAG Q figure 15

1 heat exchanger	8 ceramic burner cassette	15 thermostatic mixing valve
2 ignition unit	9 cylinder DHW (Combi)	16 flue gas discharge
3 fan unit	10 operating panel	17 combustion air supply
4 air inlet damper	11 Control Tower (CMS)	18 air box
5 gas valve	12 water filter return CH	19 type plate
6 safety valve	13 three-way valve	
7 automatic air vent	14 circulation pump	

T1 flow sensor	G gas pipe	E expansion vessel pipe (Q51C)
T2 return sensor	A flow connection central heating	K cold water pipe (combi)
T3 cylinder sensor DHW (combi)	R return connection central heating	W hot water pipe (combi)
	C condensate pipe	
P1 water pressure sensor		

17 Installation examples

17.1 Radiator installation without thermostatic radiator valves

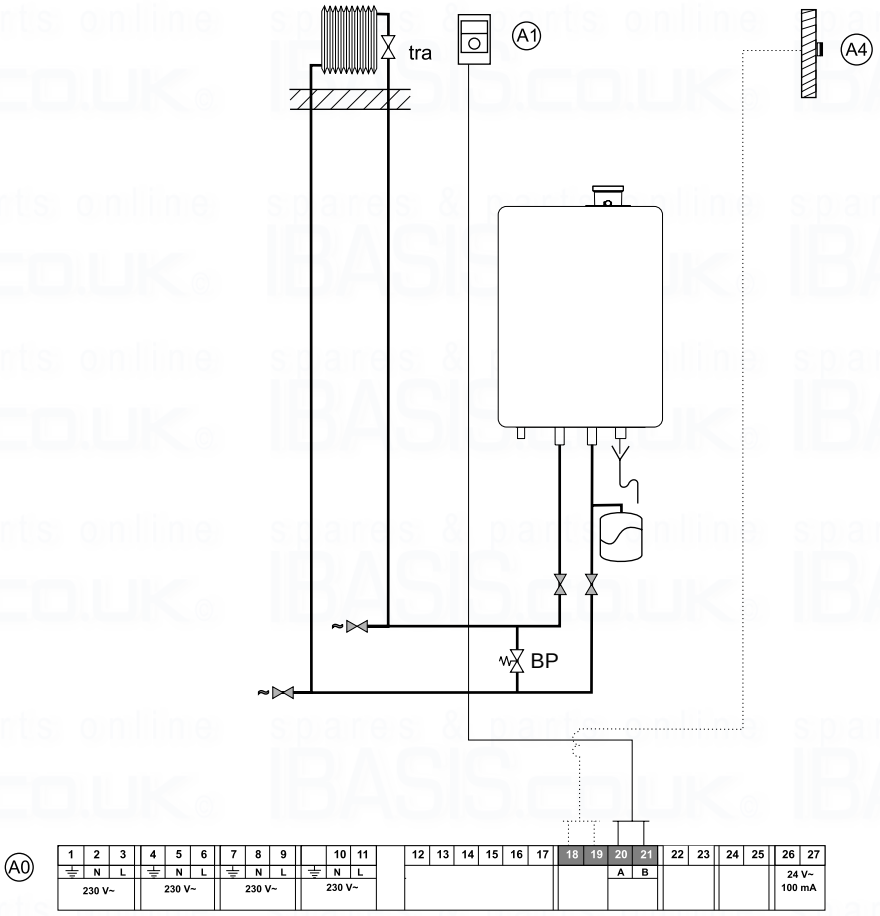

installation example

figure 16

A Boiler:

A0	Connection terminal ATAG Q	
A1	ATAG BrainQ thermostat	RSC
A4	Outside sensor	ARV12

tra	Thermostatic radiator valve
BP`	Automatic by-pass

Use alway a by pass in combination with thermostatic radiator valves.

17.2 Radiator installation with underfloor heating zone

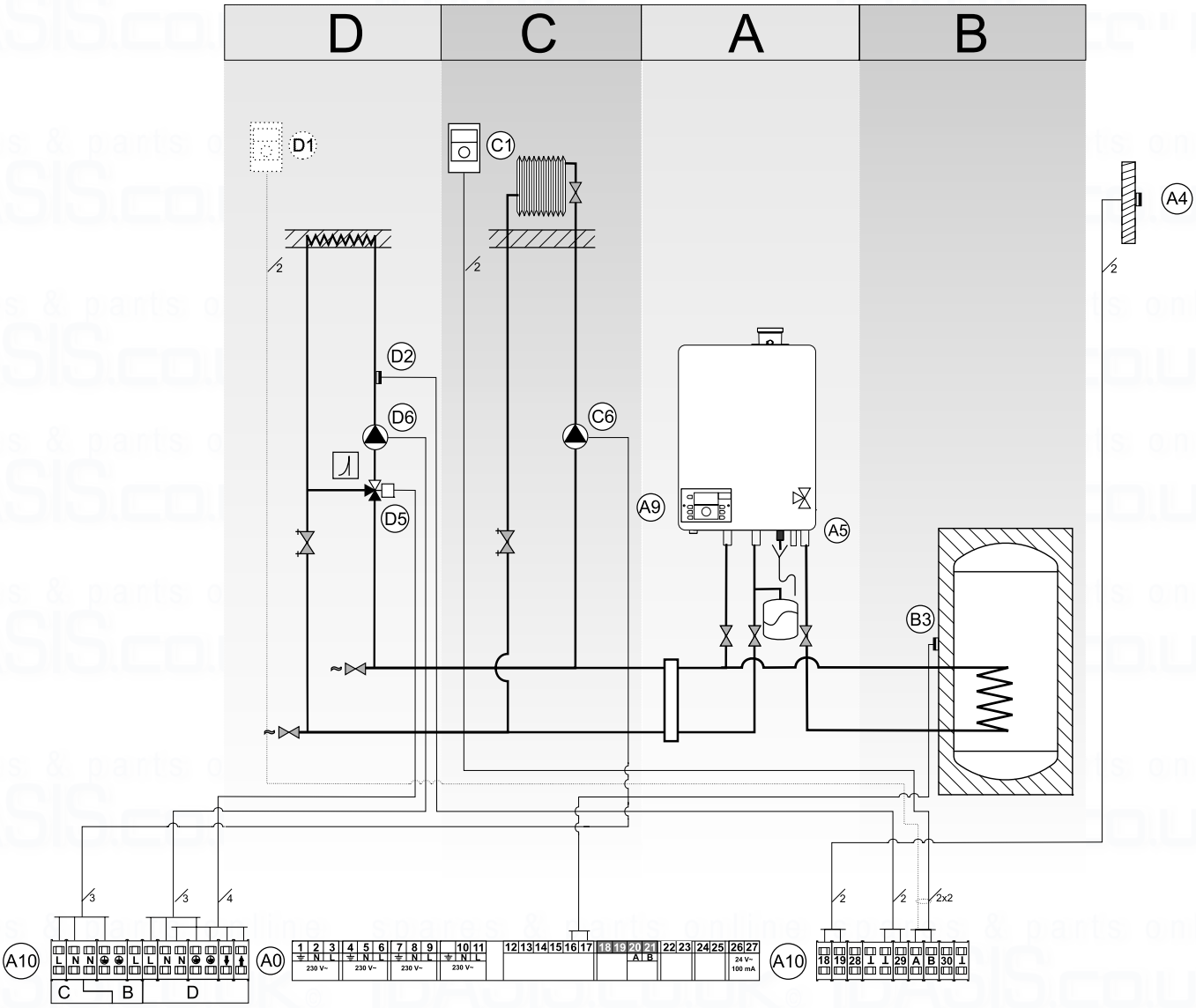

installation example

figure 17

A Boiler:

A0	Connection terminal ATAG Q	
A4	Outside sensor	ARV12
A9	ATAG MadQ zone coltroller	23BC
A10	Connection terminal MadQ built in	

B Cylinder:

B3	Cylinder sensor
B5	Three-way valve cylinder

C Direct zone:

C6	Pump direct zone

D Mixing zone:

D2	Flow sensor mixing zone	
D5	Three way valve mixing zone	230V~
D6	Pump mixing zone	

See also the installation manual ATAG MadQ Zone controller.

18 Error indication

A detected error is indicated on the display by means of blocking or error messages. A distinction should be made between these two messages due to the fact that blocking can be of a temporary nature, however, error messages are fixed lockings. The control will try its utmost to prevent locking and will temporarily switch off the unit by blocking it. Hereunder is a list of some messages.

Blocks bL with a number in the last 2 positions.

bL01 Block 01:
External safety contact cut off

bL11 Block 11:
Maximum ΔT of flow and return sensor in central heating has repeatedly been exceeded. During the block normal operation of the hot water supply is possible. The pump continues to operate at minimum capacity during the block.

bL12 Block 12:
Maximum ΔT of flow and return sensor in domestic hot water has repeatedly been exceeded. During the block normal operation of the central heating installation is possible. During the block the pump continues to operate at minimum capacity.

bL60 Block 60:
Incorrect parameter setting of the minimum or maximum power.

bL67 Block 67:
A ΔT has been detected between flow and return sensor whereas the burner is not in operation. After the ΔT has disappeared the block will disappear.

bL80 Block 80:
Maximum flue gas temperature has been exceeded (if present). The block will not be cancelled until the flue gas temperature has arrived below the temperature.

bL81 Block 81:
The flue gas sensor is not connected although it was connected to the control. The burner is blocked until the flue gas sensor is reconnected.

bL82 Block 82:
The flue gas sensor has short-circuited, heat requirement blocked and pump capacity at minimum.

bL85 Block 85:
The control has not detected a water flow. The venting cycle is started. If during this cycle water flow is detected, the venting cycle is ended and the burner is released.

Error E with a number in the last two positions.

E 00	Error 00:	Poor flame-forming
E 01	Error 01:	short-circuit of 24 volt circuit
E 02	Error 02:	no flame-forming
E 04	Error 04:	adjustment or error for voltage interruption
E 05	Error 05:	adjustment
E 12	Error 12:	fuse 24 volt/3AT faulty
E 18	Error 18:	maximum flow temperature exceeded
E 19	Error 19:	maximum return temperature exceeded
E 28	Error 28:	number of revolutions not reported back from fan
E 69	Error 69:	no or incorrect display
E 80	Error 80:	maximum flue gas sensor temperature exceeded

CE DECLARATION OF CONFORMITY

Hereby declares ATAG Verwarming Nederland BV that,

the condensing boiler types: ATAG

Q25S	Q25C
Q38S	Q38C
Q51S	Q51C
Q60S	

are in conformity with the provisions of the following EC Directives, including all amendments, and with national legislation implementing these directives:

Directive		Used standards
Gas Appliance Directive	90/396/EEC	EN483:1999
Efficiency Directive	92/42/EEC	EN677:1998
Low Voltage Directive	73/23/EEC	EN50165:1997
EMC Directive	89/336/EEC	EN55014-1:2001
		EN55014-2:1998
		EN50165:1997
		IEC61000-3-2:2000
		IEC61000-3-3:1994

Report numbers

	GAD	ED	LVD	EMC D
ATAG Q	177021	177021	177021	170538-EMC-1

and that the products are in conformity with EC type-examination certificate number E0430, as stated by KIWA-Gastec Certification BV, Apeldoorn, The Netherlands.

Date : 1 September 2005

Signature :

Full name : P. Kalverboer
CEO

ATAG Verwarming

Adres: Galileïstraat 27, 7131 PE Lichtenvoorde • **Postadres:** Postbus 105, 7130 AC Lichtenvoorde
Telefoon: +31(0) 544 391777, **Fax:** +31(0) 544 391703
E-mail: info@atagverwarming.com **Internet:** http//www.atagverwarming.nl

spares & parts online
IBASIS.CO.UK

spares & parts online IBASIS.CO.UK

spares & parts online IBASIS.CO.UK

This renewed publication cancels all previous installation instructions. The company reserves the right to change the specifications and dimensions without prior notice.

Ditributor for UK
ATAG Heating UK Ltd. • Unit M1 • Hilton Business Park • East Wittering West Sussex PO20 8RL
Phone: 01243 673888 • Fax 01243 673444 • E-mail: info@atagheating.co.uk • Internet: www.atagheating.co.uk

Ditributor for Ireland
Total Energy Management Ltd. • Unit 9 • Ballybritt Industrial Estate • Monivea Road Galway Ireland
Phone: 091 769174 • Fax 091 769485 • E-mail: info@tem.ie • Internet: www.tem.ie

E. & O. E.