Installation & Servicing Instructions

Boiler	G.C No
E 22S	41-310-12
E 32S	41-310-13
E 22C	47-310-13
E 32C	47-310-14

CE PIN 0063BR3405

These instructions to be retained by user.

8G.51.60.00/03.07 *Changes reserved.*

Explanations of symbols and signs on the Control Tower display.

Operation indication
(in the first display position of technical read out)

0	No heat requirement
1	Ventilation phase
2	Ignition phase
3	Burner active on central heating
4	Burner active on hot water
5	Fan check
6	Burner off when room thermostat is demanding
7	Pump overrun phase for central heating
8	Pump overrun phase for hot water
9	Burner off because of too high flow water temperature
A	Automatic venting program

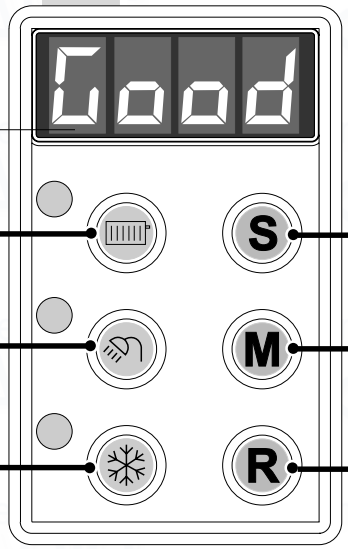

Central heating	*on / off*	Step key	*Selecting chapters*
Domestic hot water (DHW)	*on / off*	Mode key	*Selecting chapters*
Pump program	*on / off*	Reset key	*Unlocking the boiler in case of error*

From "Good" read-out to Technical read out (and vice versa):
- Press STEP key for 5 sec.

FILL

Water pressure is to low (<0,7 bar), FILL indication remains continuously visible, the boiler is taken out of operation. The installation needs to be topped up.

FILL

Water pressure is to low (<1,0 bar), flashing FILL will alternate with indication of water pressure, boiler power of 50% is possible. The installation needs to be topped up.

HIGH

Water pressure is to high (>2,8 bar), if HIGH indication remains continuously visible, the boiler is taken out of operation. The installation pressure needs to be decreased by draining water.

Content

1 Introduction 4
2 Regulations 4
3 Scope of the supply 6
4 Description of the boiler 6
5 Mounting the boiler 6
5.1 Dimensions 7
6 Connecting the boiler 9
6.1 Central heating system 9
6.2 Expansion vessel 11
6.3 Underfloor heating system (plastic pipes) 12
6.4 Gas connection 12
6.5 Hot water supply 12
6.6 Condensation drain pipe 13
6.7 Flue gas exhaust system and air supply system 14
6.7.1 Dimensions of the flue gas and air intake duct 17
7 External hot water cylinders 18
8 Electrical connection 19
9 Boiler controls 21
9.1 Explanation of the function keys 22
10 Filling and venting the boiler and installation 23
10.1 Hot water supply 23
11 Commissioning the boiler 24
11.1 Central heating system 24
11.2 Hot water supply 24
11.3 Adjustments 25
11.4 Activating factory settings (green key function) 27
12 Isolating the boiler 28
13 Commissioning 28
13.1 Checking for contamination 28
13.2 Checking of the zero pressure control 29
13.3 Checking the CO_2 30
14 Maintenance 31
14.1 Frequency of maintenance 31
14.2 Maintenance activities 32
14.3 Warranty 32
15 Technical specifications 33
16 Parts of the boiler 34
17 Installation examples 35
17.1 Radiator installation without thermostatic radiator valves 35
17.2 Radiator installation with underfloor heating zone 36
18 Error indication 37
19 Declaration of conformity 38
20 KIWA Certificate 39

The appliance should only be installed by a Competent Gas Installer. Work on the boiler must be carried out by a competent person, (Ref: Gas Safety Installation and Use Regulations) using correctly calibrated instruments with current test certification.

1 Introduction

These instructions describe the functioning, installation, use and primary maintenance of ATAG central heating boilers for the United Kingdom and Ireland. Where necessary the different regulations for each country are separately described.

These instructions are intended for the use by Corgi registered installers or registered Bord Gais installers in connection with the installation and putting into operation of ATAG boilers. It is advisable to read these instructions thoroughly, well in advance of installation. Separate instructions for use are supplied with the boiler for users of ATAG central heating boilers. ATAG is not liable for the consequences of mistakes or shortcomings which have found their way into the installation instructions or user's manual. Further, ATAG reserves the right to alter its products without prior notification.

When delivering the boiler, give the customer clear instructions concerning its use; present the customer with the user's manual and card.

Each boiler is fitted with an identification plate. Consult the details on this plate to verify whether the boiler is compliant with its intended location, e.g.: gas type, power source and exhaust classification.

On completion of the installation the installer or commissioning engineer must fill out and complete the Benchmark commission section of the boiler log book and hand to customer or end user for future record keeping. The Benchmark log book must also be filled out and completed by the service agent following each service call, and returned to the customer. A copy of the Benchmark commissioning certificate must be returned to ATAG Heating UK Ltd along with the warranty registration card to register the appliance for the standard warranty benefits

Relevant Installation, Service and User manuals:

- ATAG Monopass — Flue system guide
- ATAG BrainQ — Digital room thermostat
- ATAG MadQ — Cascade-/Zone controller

2 Regulations

The following regulations apply to installation of ATAG central heating boilers:

Legislation and Regulations.
Gas Safety (Installation and Use). All gas appliances must by law, be installed by a competent person, eg. Members of CORGI and in accordance with the current Gas Safety Regulation. Failure to install appliance correctly could lead to prosecution.

In addition to the above regulations this appliance must be installed in compliance with the current IEE Regulations, the Building Standards (Scotland Consolidation) Regulations. Regulations and bye laws of the Local Water Authority and the Current Health and Safety Regulation.

Ireland:

- Irish standard 813
- Domestic gas installations

The current, Electricity at Work Regulation must be complied with and also be in accordance with the relevant and current editions of the British Standards.

The ATAG E boiler is a certified appliance and must not be modified or installed in any way contrary to this Installation Manual.
Manufacturers instructions must not be taken in any way as overriding statutory obligations.

The ATAG E is a central heating boiler with an optional integrated hot water function. These boilers must be connected according to these instructions and all installation norms in respect of the part of the boiler to be connected.

Observe the following rules of safety:
- All work on the boiler must take place in a dry environment.
- ATAG boilers may never be in operation without their housing, except in connection with maintenance or adjustments (see Chapter 13 and 14).
- Never allow electrical or electronic components to come into contact with water.

Carry out the following tasks in connection with maintenance, etc. to an already-installed boiler:
- Shut down all programs
- Close the gas tap
- Remove the plug from the wall socket
- Close the stop cock of the boiler's intake connection

Take note of the following when maintenance or adjustments are needed:
- The boiler must be able to function during these activities; for this reason, the boiler's supply voltage, gas pressure and water pressure must be maintained. Ensure that there is not a source of potential danger during these activities.

Following maintenance or other activities; always check the installation of all parts through which gas flows (using leak-search spray).

Following maintenance or other activities, always replace the housing and secure it with the screw behind the door at the front of the casing.

The following (safety) symbols may be encountered in these installation instructions and on the boiler:

This symbol indicates that the boiler must be stored away from frost.

This symbol indicates that the packaging and/or contents can be damaged as a result of insufficient care taken during transport.

This symbol indicates that, whilst still in its packaging, the boiler must be protected from weather conditions during transport and storage.

KEY-symbol. This symbol indicates that assembly or dismantling, must be carried out.

ATTENTION symbol. This symbol indicates that extra attention must be paid in connection with a particular operation.

Useful tip or advice

3 Scope of the supply

The boiler is supplied ready for use. The supply kit is composed as follows:

- Boiler with casing;
- Automatic vent (inside the boiler);
- Safety valve (inside the boiler);
- Suspension bracket
- Expansion vessel (inside the boiler)
- Fixing material consisting of plugs and screws;
- Template;
- Installation instructions
- Operating manual;
- Warranty card;
- Benchmark logbook.

4 Description of the boiler

Room sealed boiler
The boiler retrieves its combustion air from the outside then discharges the flue gasses to the outside.

Condensing
Retrieves heat from the flue gasses. Water condensates on the heat exchanger.

Modulating
Higher or lower burning according to the heat demand.

Stainless Steel
Super solid kind of steel which keeps its quality for life. It will not rust or erode in contrast to composition materials, like aluminium.

A

The ATAG E boiler is a room sealed, condensing, modulating central heating boiler, with or without an integrated hot water facility.

The boiler is provided with a compact stainless steel heat exchanger with smooth tubes. A well thought out principal using durable materials.
The boiler burns gas for supplying warmth. The heat is transferred in the heat exchanger to the water in the central heating system. By cooling down the flue gasses condensate is formed. This results in high efficiency. The condensate, which has no effect on the heat exchanger and the function of the boiler, is drained through an internal siphon.

The boiler is provided with an intelligent control system (CMS Control Management System). The boiler anticipates the heat demand of the central heating system or the hot water facility.

When an outside sensor is connected, the boiler works weather dependantly. This means that the boiler control measures the outside temperature and flow temperature. With this data the boiler calculates the optimal flow temperature for the installation.

Explanation of the type indication: ATAG E 22C

E = Type
22 = Nominal load in kW
C = Combi (S = Solo)

The boiler has been tested according to valid CE* standards and has a CE* certificate and SEDBUK A-rating.

Statement: No banned materials including asbestos, mercury, CFC's have or will not be included in the product.

5 Mounting the boiler

The room where the boiler will be placed must always be frost free. The boiler casing is splash water tight (IPX4D) and is suitable to be installed in e.g. a bathroom.

It is NOT necessary to have a purpose provided air vent in the room or internal space in which the boiler is installed. Neither is it necessary to ventilate a cupboard or compartment in which the boiler is installed, due to the extremely low surface temperature of the boiler casing during operation. Therefore the requirements of BS 6798, Clause 12, and BS5440:2 may be disregarded.

The boiler can be mounted practically to any wall with the suspension bracket and the enclosed fixing equipment. The wall must be flat and of sufficient strength in order to be able to carry the boiler weight with its water content.
Above the boiler there must be at least 250 mm working space in order to be able to fit a coaxial flue system or a twin supply. On the left side of the boiler at least 50 mm and on the right side 10 mm must be reserved to allow fitting or removing of casing. The location of the boiler can be determined by using the template.

Remove the casing of the boiler. The casing is also the airbox of the boiler and is secured with a screw behind the door at the front. Also the four quick-release fasteners (2 at the top and 2 at the bottom) should be secured with a screw.

First remove the screws before loosening the quick-release fasteners. Tighten the screws again when replacing the housing.

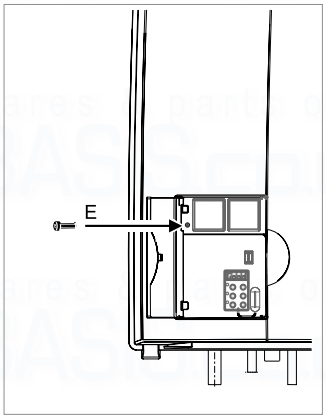

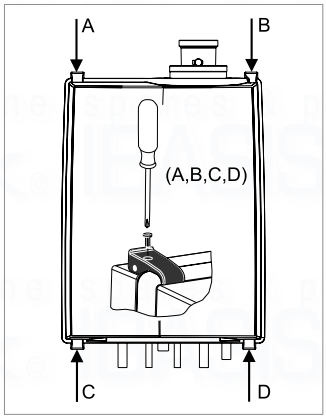

Removing the casing figure 1

Lift the boiler only by the boilers rear wall.

Lifting and carrying precautions:
- Lift only a manageable weight, or ask for help.
- When lifting the boiler, bend the knees, and keep the back straight and feet apart.
- Do not lift and twist at the same time.
- Lift and carry the boiler close to the body.
- Wear protective clothing and gloves to protect from any sharp edges.

5.1 Dimensions

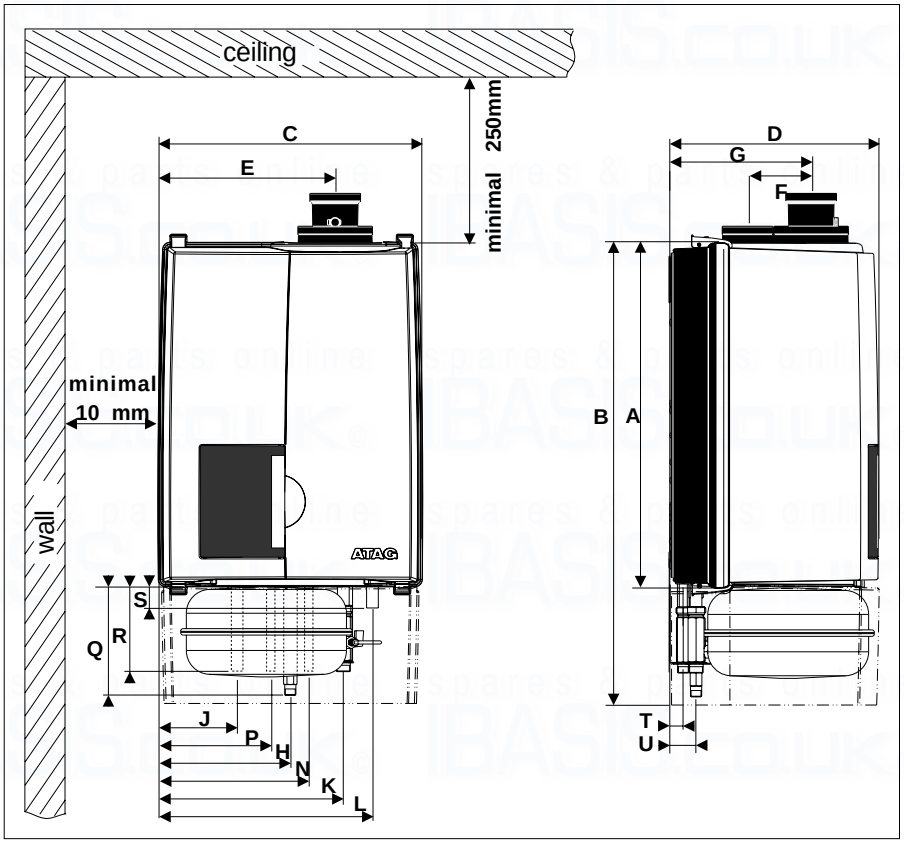

dimensions (in mm) figure 1

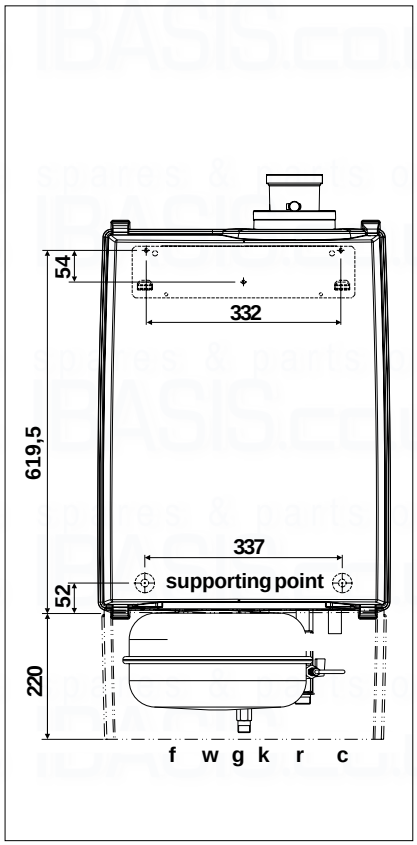

boiler connections/mounting points figure 3

	type of unit		E22S	E22C	E32S	E32C
A	height	mm	650	650	650	650
B	height with expansion vessel	mm	-	-	870	870
C	width	mm	500	500	500	500
D	depth	mm	395	395	395	395
E	left side / flue gas exhaust	mm	335	335	335	335
F	centre to centre / flue - airintake	mm	120	120	120	120
G	back / flue gas exhaust	mm	270	270	270	270
H	left side / gas pipe	mm	250	250	250	250
J	left side / flow pipe	mm	150	150	150	150
K	left side / return pipe	mm	350	350	350	350
L	left side / condensation pipe	mm	405	405	405	405
N	left side / cold water pipe	mm		285		285
P	left side / hot water pipe	mm		215		215
Q	pipe lenght of g*	mm	19	19	215	215
R	pipe lenght of c*	mm	40	40	40	40
S	pipe lenght of c and f;r;k and w*	mm	50	50	160	160
T	back / centre of pipe c;k and w*	mm	26	26	26	26
U	back / centre of pipe f;g and r*	mm	50	50	50	50

dimensions table 1

type of unit		E22S	E22C	E32S	E32C
air supply / flue gas system	mm	60 / 100	60 / 100	60 / 100	60 / 100
gas pipe - g		½" female	½" female	½" female	½" female
central heating flow pipe - f		22 mm	22 mm	¾" ext.	¾" ext.
central heating return pipe - r		22 mm	22 mm	¾" ext.	¾" ext.
condensation discharge pipe - c		22 mm	22 mm	22 mm	22 mm
cold water pipe - k			15 mm		½"ext.
hot water pipe - w			15 mm		½"ext.

connection diameters table 2

6 Connecting the boiler

The boiler has the following connection pipes;

- The central heating pipes.
  These can be connected to the installation by means of compression fittings / adapter fittings;
- The gas pipe.
  It is provided with a female thread into which the tail piece of the gas valve can be screwed;
- The condensation drain pipe.
  It consists of a 22mm plastic pipe. The drain pipe can be connected to this by means of an open connection. If the open connection is fitted in a different location, then the pipe can be lengthened by means of a 32 mm PVC sleeve;
- The flue gas exhaust system and air supply system.
  It consists of a concentric connection 60/100 mm.
- Cold and hot water pipes.
  Only Combi boilers: *These consist of 15 mm copper pipe and can be connected to the installation by means of compression fittings / adapter fittings.*

It is recommended that isolation valves are fitted to all heating and hot water connections to facilitate ease of future maintenance.

It is advisable to spray-clean all of the boiler's connecting pipes and/or to spray-clean/blow-clean the installation before connecting it to the boiler.

6.1 Central heating system

Connect the central heating system according to the actual regulations.

The boiler pipes can be connected to the installation by means of compression fittings. Reducers should be used for connecting to thick-walled pipe (welded or threaded).

When removing the plastic sealing caps from the pipes, contaminated testing water may be released.

The boiler has a self-adjusting and self-protecting control system for the load. By this means the temperature difference between the flow and return water is checked. Table 3 shows the water displacement which supplies the circulation pump at certain installation resistance.

type of unit	Pump type	water flow rate ΔT 20°C		permissible installation resistance	
		l/min	l/h	kPa	mbar
E22S	UPS 20-50	14,3	856	28	280
E32S	UP 20-60	20.7	1244	17	170
E22C	UPS 20-50	14,3	856	27	270
E32C	UP 20-60	20.7	1243	15	150

Installation resistance table 3

If the installation resistance is higher than the stated value the load will be adjusted until an acceptable temperature difference between flow and return water has been obtained. If, after this, the temperature difference remains too much then the boiler will switch itself off and wait until an acceptable temperature has been reached.

If an unacceptable temperature is detected, then the control will repeatedly try to achieve water flow, and if this does not work then the boiler will switch off.
If the capacity of the boiler pump is insufficient, an extra external pump can be installed in combination with a low velocity header in series with the boiler. The electrical side of this external circulation pump can be connected in the Control Tower, by means of an optional cable tree, which can be ordered seperately (art.nr. S4643900). The external pump will switch at the same times as the boiler pump.
The maximum absorbed current consumption of the external circulation pump may be 230 W (1 Amp). The extra external pump must be selected according to the installation resistance and the required flow.

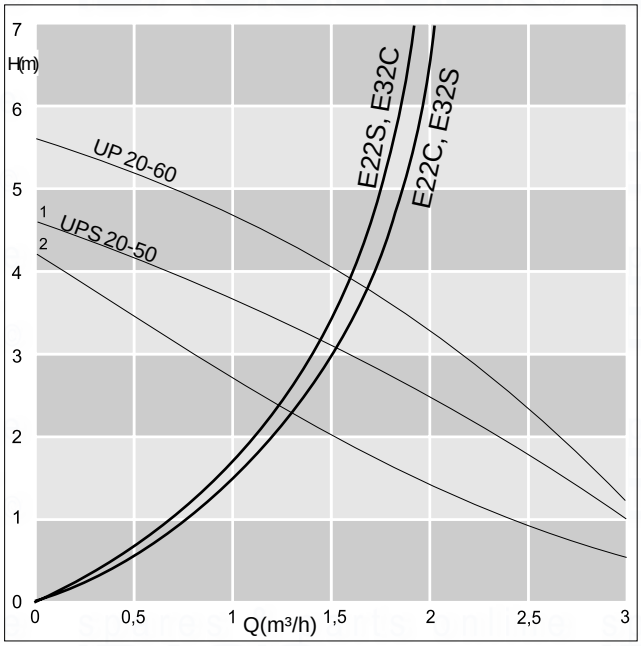

pump index lines graph 1

As standard the boiler is provided with a water filter in the return pipe of the boiler. With this, possible contamination of the central heating water is prevented from ending up in the boiler. The boiler is also provided with an internal safety valve set at 3 bar. This is connected to the waste discharge together with the condensation discharge.

If all, or a large part of the radiators are provided with thermostatic radiator valves it is advisable to use a pressure difference control (bypass) in order to prevent flow problems in the installation.

The boiler is designed to be used on a sealed system only.

Additives in the installation water are only permitted in consultation with the country distributor. ATAG Heating UK Ltd recommend the use of either Fernox or Sentinel products.

6.2 Expansion vessel

All ATAG E-Series boilers are provided with an internal expansion vessel.
The vessel of the E22S and E22C is positioned inside the boiler casing. This expansion vessel has a pre-charge pressure of 1 bar and a capacity of 8 litres.
The vessel of the E32S and E32C is positioned directly beneath the boiler and together with the casing forms a single entity with the boiler.
The expansion vessel is located vertically behind the casing, which can be removed by pulling forwards. The expansion vessel has a pre-charge pressure of 1 bar and a capacity of 12 litres.
If a larger capacity expansion vessel is needed for the installation a standard expansion vessel should be fitted additionally.

If the internal expansion vessel is not sufficient, choose an expansion vessel volume, of which the summary is geared to the installation's water capacity. The pre-charge pressure depends on the installation height above the expansion vessel (Table 4). Fit the expansion vessel into the return pipe as close as possible to the boiler.

installation height above the expansion vessel	pre-charge pressure of the expansion vessel
5 m	0,5 bar
10 m	1,0 bar
15 m	1,5 bar

choice of expansion vessel table 4

6.3 Underfloor heating system (plastic pipes)

When connecting or using an underfloor heating system, designed with plastic pipes, or plastic pipes are used elsewhere in the installation,one should ensure that the plastic pipes used comply with the DIN 4726/4729 standard. It is set out in this standard that the pipes may not have oxygen permeability higher than 0.1 g/m³.d at 40°C. If the system does not comply with this DIN standard, the underfloor heating component will have to be separated from the central heating appliance by means of a plate exchanger.

No recourse can be made to the terms of the warranty in the event of failure to observe the regulations pertaining to plastic underfloor heating pipes.

6.4 Gas connection

The appliance pipe is fitted with an internal thread, into which the tail piece of the gas tap can be screwed.

United Kingdom:
The gas supply must comply to the current Gas Safety, Installation & Use Regulations.

Ireland:
- Irish standard 813
- Domestic gas installations

The connection to the appliance must include a suitable method of disconnection and a gas control cock must be installed adjacent to the appliance for isolation purposes. The nominal inlet working gas pressure measured at the appliance should be 20 mbar for Nat gas (G20).

Make sure that the gas pipe work does not contain dirt, particularly with new pipes.

When the boiler has to be converted from natural gas to LPG, ATAG provides special kits for this purpose. Special instructions are supplied with the kit.

Always check the installation of all of the parts through which gas flows (using leak-search spray)

6.5 Hot water supply

Connection of the drinking water installation should be done according to the national water laws.

The ATAG E combination boilers are fitted with a stainless steel plate heat exchanger for producing domestic hot water. The boiler does not have a hot water store and in case of a demand for hot water the boiler will heat the domestic water flowing through the plate heat exchanger up to 60°C instantaneous.

The water mains installation must comply with the British water regulations.

In regions with a water hardness value higher than 267ppm (2,67 mmol/l), calcium deposits should be removed from the plate heat exchanger on a regular basis. If problems occur when using sanitary water with a chlorine content higher than 150 mg/l, no recourse can be made to the terms of the warranty.

The hardness of the water is variable in Great Brittain and Ireland. The water company can provide exact information about this.

The domestic water pipes can be connected to the installation by means of compression fittings / adapter fittings. The cold water inlet on the Combi boilers must be provided with the following (counted in the water flow direction):
- Dosing valve (supplied),
- Safety group,
- Expansion vessel 6bar (potable water, blue).

A dosing valve must be fitted in the cold water pipe. The dosing valve ensures that a quantity of water is supplied which has a guaranteed outlet temperature of 60°C (assuming a cold water temperature of 10°C). The quantity of water is virtually unaffected by the water pressure.

With a water pressure lower than 1.5 bar it is advisable to remove the inside mechanism of the dosing valve.

6.6 Condensation drain pipe

ATAG boilers produce condensate. This condensate must be drained otherwise the boiler will not function.

The common condensation drain pipe should be connected to the drain by means of an tundish break connection. By this means the possibility of drain gases ending up in the boiler is prevented. The drain connection should have a minimum diameter of 32mm.

Connect the condensation drain pipe according to the actual regulations.

The following components are connected to the collective condensation drain pipe:
- Condensation discharge;
- Safety valve;

Draining of the condensation water to the external rain guttering is not permitted in view of the danger of freezing.

Before putting the boiler into operation fill the siphon with 300 ml of water.

The condensate pipe must be run using suitable corrosion resistant materials (eg. plastic).

6.7 Flue gas exhaust system and air supply system

The flue gas exhaust system and air supply system consists of:
- Flue gas pipe;
- Air supply pipe;
- Roof or wall terminal.

The flue gas exhaust system and air supply system must comply with:

United Kingdom:
The flue gas outlet and air supply installation must comply with the current regulation requirements. IG UP 10 and BS 715.

Ireland:
- Irish standard is 813 section 9.10.1

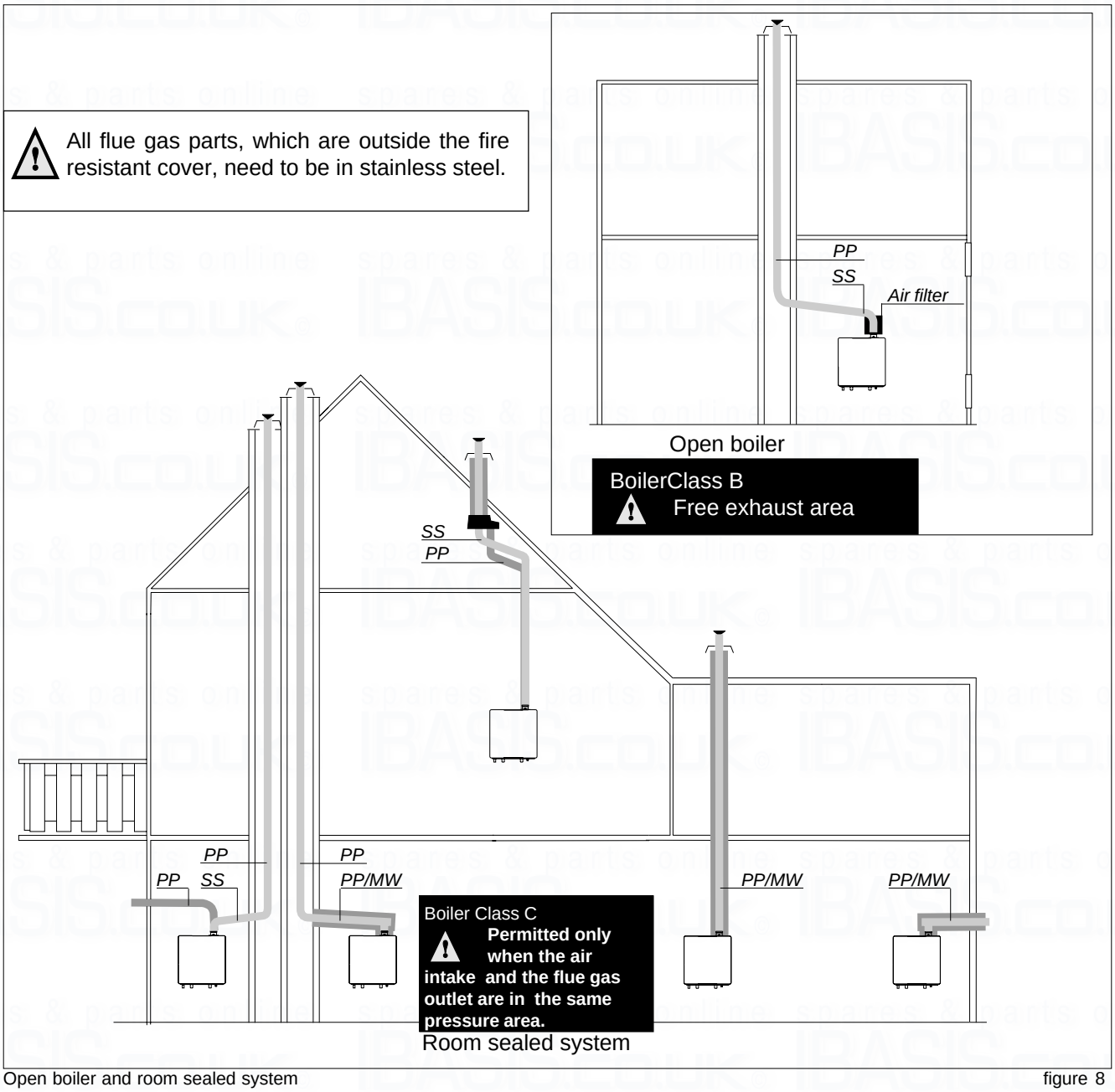

Open boiler and room sealed system figure 8

The appliance concentric connection diameter is 60/100 mm, to which the flue gas outlet and air supply system can be fitted, with or without elbow pieces. The maximum permissible pipe length is set out in Table 5.
It is also possible to use a parallel pipe connection of 2x 80mm. In this case the adapter 60/100 should be removed and a seperate 125mm cover should be ordered. Art.nr. S4323410.

We suggest you design a simple flue gas system and air supply system using table 6. For further information about the available components of the flue gas and air supply system we recommend you consult the Monopass Flue system literature.

The ATAG flue gas system is meant and designed solely for the use on ATAG central heating boilers adjusted to Nat gas or LPG. The maximum flue gas temperatures are below 70°C (full load 80/60°C)
The proper operation can be influenced harmfully by changes of or adjustments to the correct set up.
Possible warranty claims will not be honoured if incorrect changes result in non compliance with the installation manual or local rules and regulations.

The flue gas systems described in this document are solely suited for ATAG central heating boilers of the ATAG boiler range. For this purpose the CE Certificate has been supplemented under the Gastec nr: 0063BR3405, 0063BQ3021, 0063AS3538 and 0063AU3110.
The flue gas system should be built up using only ATAG program products. Combinations with other brands or systems are without written permission from ATAG Heating is not permitted.

The terminal should be located where dispersal of combustion products is not unimpeded and with due regard for the damage or discolouration that might occur to parts of the building in the vicinity (see fig 9).

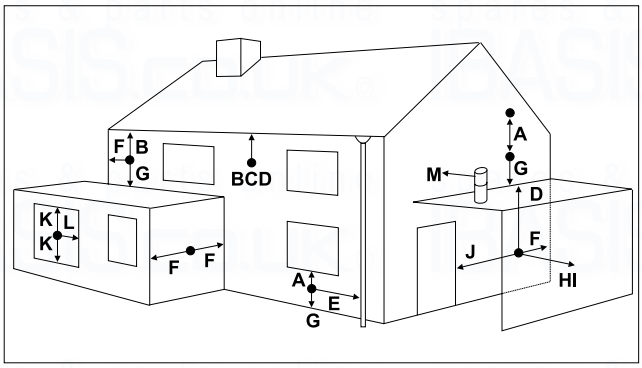

figure 9

	terminal position for fan assisted boiler		minimum distance
A	directly below an open window or other opening (e.g. air brick)	mm	300
B	below gutters, soil pipes or drain pipes	mm	75
C	below eaves	mm	200
D	below balconies or car port roof	mm	200
E	from vertical drain pipes and soil pipes	mm	75
F	from internal or external corners	mm	300
G	above ground or below balcony level	mm	300
H	from a surface facing a terminal	mm	600
I	from a terminal facing a terminal	mm	1200
J	from an opening in the car port (e.g. door window) into dwelling	mm	1200
K	vertically from a terminal on the same wall	mm	1500
L	horizontally from a terminal on the same wall	mm	300
M	horizontally from a vertical terminal to a wall	mm	300

Dimensions table 6

In certain weather conditions condensation may also accumulate on the outside of the air inlet pipe. Such conditions must be considered and where necessary insulation of the inlet pipe may be required.
In cold and/or humid weather water vapour may condense on leaving the flue terminal. The effect of such 'plumeing' must be considered.

The terminal must not be located in a place where it is likely to cause a nuisance.
For protection of combustibles, refer to IS 813 section 9.10.1. where the terminal is less than 2m (6.6ft) above a pavement or platform to which people have access (including) any balcony or flat roof. The terminal must be protected by a guard of durable material.
A suitable guard is available from the country distributor.

Where a terminal is fitted below a window which is hinged at the top, and where the hinge axis is horizontal, and the window opens outwards, the terminal shall be 1m below the bottom of the window opening.

If the boiler is to be located under stairs, a smoke alarm meeting the requirements of I.S. 409 or equivalent must be fitted.

The flue must be terminated in a place not likely to cause a nuisance.

For horizontal sections, the outlet system should always be fitted on an incline (50 mm/m) sloping down towards the appliance so that no condensation water is able to accumulate in the outlet system. The chances of icicles forming on the roof outlet is minimised by causing the condensation water to run back towards the appliance. In the case of horizontal outlets the inlet system should be fitted on an incline sloping down towards the outside to prevent rainwater from coming in.

The appliance produces a white wisp of condensation (plumeing). This wisp of condensation is harmless, but can be unattractive, particularly in the case of outlets in outside walls.

At this time there are 2 different ways of connecting the flue gas/air intake system. The flue gas duct for the 60/100, 80/125 and 100/150 are push fit connections, see figure 10.
The air intake for the 60/100 is a clamp ring connection.
These two types are not interchangeable.

Cutting the pipe goes as follows:
- Take out the inner tube by turning it until it releases from its security position;
- Cut just as much from the air intake part as from the flue gas part;
- Take off the burrs from the cutting edge to prevent cutting the seals;
- Click the pipes back together again.

  Use special grease to simplify the fitting

When mounting the flue gas system, pay attention to the flow direction. An arrow on the product points this out. It is not permitted to mount a system upside down and will lead to complaints.

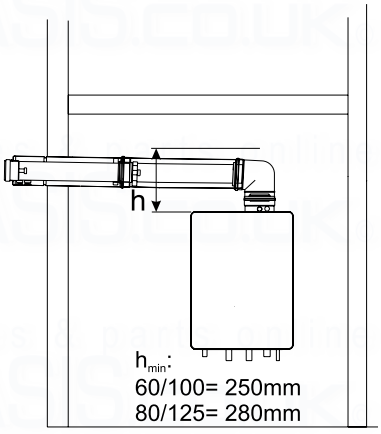

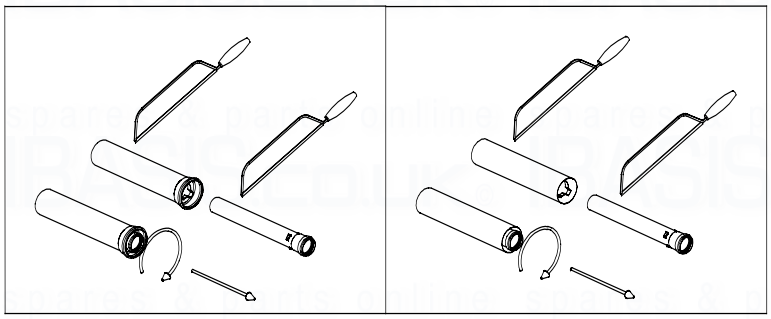

Dismantlement and shorten pipes *figure 11*

6.7.1 Dimensioning of the flue gas and air intake duct

The flue diameter is determined by the total length of the run, including for the connection pipe, elbows fittings and terminal covers etc and the type and number of boilers installed into the system.

An undersized flue pipe can lead to disorders. Look at table 1 for the choice of the system and the correct diameter. The table below shows the maximum flue lengths with the different boiler outputs. A longer flue gas length can be achieved by increasing the diameter to ø 100mm.

Explanation table 1:
Two pipe flue gas system: maximum noted length = distance between boiler and roof terminal A
Concentric flue gas system: maximum noted length = distance between boiler and roof terminal B

When using bends the noted value behind every bend should be deducted from the maximum straight length.

Example:
A 22kW with a concentric flue gas system ø60/100mm has according to the table a maximum flue straight length of 12m In the system that is going to be put in there are 2 x 45° bends, so the maximum flue gas length is
12 – (2 x -1) = 10 meters.

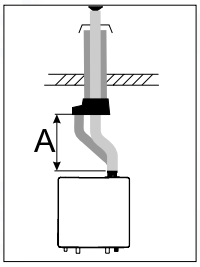

Two pipe flue system + chimney lining			
		ø80mm	A in m
E22S E22C		**Maximum straight lenth 80**	**30**
		87° bend resistance length	-1,5
		45° bend resistance length	-0,8
E32S E32C		**Maximum straight lenth 80**	**24**
		87° bend resistance length	-1,5
		45° bend resistance length	-0,8

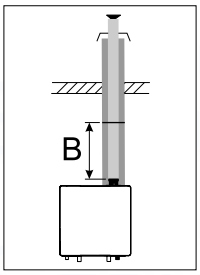

Concentric flue system				
	ø60/100mm	B in m	ø80/125mm	B in m
E22S E22C	**Maximum straight lenth 60/100**	**12**	**Maximum straight lenth 80/125**	**30**
	87° bend resistance length	-1	87° bend resistance length	6
	45° bend resistance length	-1	45° bend resistance length	-2,8
E32S E32C	**Maximum straight lenth 60/100**	8	**Maximum straight lenth 80/125**	**24**
	87° bend resistance length	-1	87° bend resistance length	0
	45° bend resistance length	-1	45° bend resistance length	0

Dimensions flue gas system and air supply system Table 5

7 External hot water cylinders

Depending of the comfort preferences different external hot water cylinders can be connected to the boiler. The choice of the cylinder depends on the coil output. The coil output must comply with the boiler output.

The E-Series are provided with an internal DHW control. The electrical connection can be made on the connection terminal in the Control Tower. See the wiring diagram on page 19 and 20.

8 Electrical connection

The appliance complies with the CE Machinery Directive 89/392/EEC. The EC Low Voltage Directive 72/23/EEC and the EC EMC Directive 89/336/EEC.
A 230V -50Hz mains electrical supply is required fused externally at 5A.

The installation must continue to comply with:
United Kingdom:
- the national rules for electrical installations.

Ireland:
- the ECTI national rules for electrical installations

The appliance must be connected to an earthed socket. this must be visible and within reach.

The following general stipulations also apply:
- No changes may be made to the wiring of the appliance;
- All connections should be designed in accordance with the enclosed regulations.;
- Should it be necessary to change it, the mains power supply cable may only be replaced with an ATAG mains power supply cable (item No. S4477300).

The ATAG room thermostat and controls must be connected to their allocated connections. All other types or makes of room thermostats or controls which are used must have a Volt free contact.

When using an on/off thermostat or control, it is possible that an anticipating resistance must be installed in order to prevent too high temperature fluctuations. As a standard rule this means mercury thermostats. This resistance wire can be ordered by your supplier and must be connected to clamps 23 and 27. The anticipating resistance in the room thermostat has to be set at 0.11 A.

For more detailed questions regarding the components which are not supplied, the country distributor should be contacted.

Connection terminalE-Series

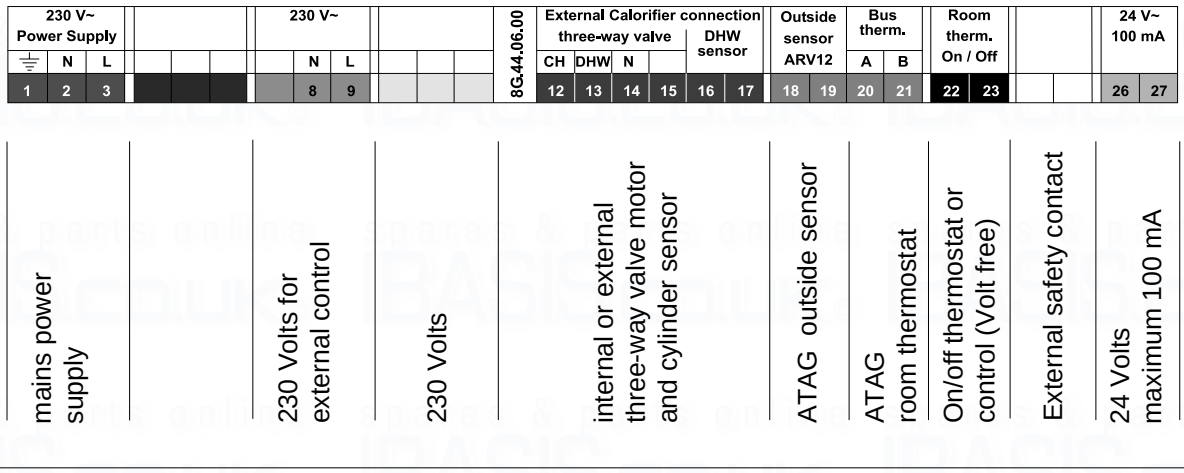

Connection terminal *figure 10*

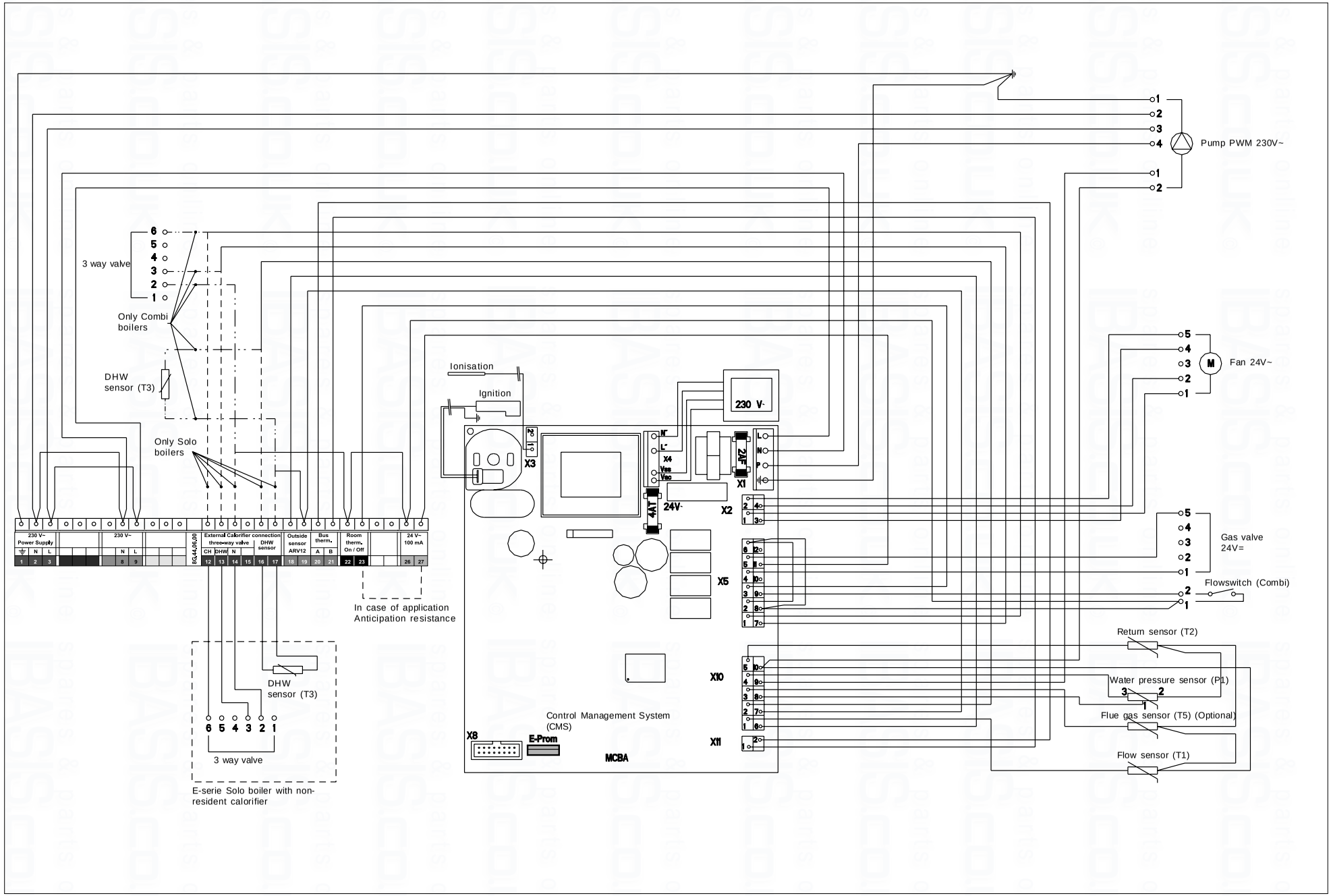

electrical diagram

figure 11

9 Boiler controls

The boiler is provided with a fully automatic microprocessor control, called CMS Control Management System. This system simplifies operation by undertaking all major control functions. Initially when power to the boiler is switched on it will remain on standby. There is no indication Led on, untill one of the programme keys is pressed. The control panel display will show the relevant state. When the installation is empty the display will show FILL.
The various parameters can be called up in two ways:

The Good-state or standard read out

The first way shows a simple display read out.
The boiler in operation will always show 'Good'. When a message is necessary this will be shown instead of Good.

Technical read out

The second way is a technical read out. In normal situations the following will be shown:

- on the left the status in which the boiler is active;
- on the right the flow temperature;
- the water pressure in the installation.

When a message (error or blocking code) is necessary this will be shown instead of the technical read out..

To switch over from the Good-state to the Technical read out (and vice versa):
- Press the STEP-key for 5 sec.

When the system has been filled the automatic venting program starts, when a program has been selected, by pressing the key for Central Heating, DHW or pump program (, of). The program takes 17 minutes and stops automatically. After this the boiler will function normally. (See also 'Filling and venting the boiler and installation).

During this 17 minute program, the boiler will not operate for Central Heating or DHW. The display will show A and the boilers current flow temperature.

On a call for heating or hot water the control system will select the required water control temperature. This water temperature is called the T-set value. On a call for central heating the boiler ignites first at low output. The output is then changed slowly to match the load required. The boiler operates in this way to avoid excessive installation noises and temperature overshoot. On a call for hot water supply the T-set value of central heating return water temperature is monitored. Depending on the amount of sanitary water which is withdrawn from the plate heat exchanger, the central heating return water temperature, from which the input is adjusted, will vary.

9.1 Explanation of the function keys

- Central Heating program key.
  Switching the Central Heating on or off (Led on/off);

- Hot Water program key.
  Switching the Domestig Hot Water (DHW) facility on or off (Led on/off);

- PC program key.
  adjusts the pump to continuous water circulation in the central heating system (Led on), or according to the pump overrun times on the relevant programs (Led off);

When the pump is switched on continuously it can lead to undesired heating up of the central heating system during the summer.

- **Mode-key.**
  After briefly pressing, a selection of the data chapters can be retrieved.
  After pressing for 5 seconds it is possible to enter the code as described in chapter 11.3;
- **Step-key.**
  After briefly pressing, the water pressure can be retrieved and pages per chapter can be retrieved.
  After pressing for 5 seconds it switches from the Good-state to technical read out and vice versa;
- **Reset-key.**
  After briefly pressing, for:
  - unlocking errors;
  - ending the access code;
  After pressing for 5 seconds an operating stop is made, for example, for activating the automatic venting program.

Some keys have other functions.These functions are only active when according to the procedure described in chapter 11.3, adjustment has to be changed or data must be retreived from the CMS.
The other functions are:

- Central Heating program key : + function;
- Hot Water program key: - function;
- PC program key : store-function, which means that by means of this key a modified setting is confirmed;
- Step-key: scrolling in a data chapter.

10 Filling and venting the boiler and installation

The central heating installation needs to be filled with potable water. For filling or topping up the installation you use the filling loop according to the following procedure:

1 Switch on the power supply;
2 The diplay will show FILL;
3 All functions off (heating, DHW and pump);
4 Push briefly the 'STEP'-button: P x.x = water pressure in bar;
5 Open the filling loop (Indication on display increases);
6 Fill up slowly to 1.5 to 1.7 bar;
7 STOP appears on the display;
8 Close the filling loop;
9 De-aerate the complete installation, start at the lowest point;
10 Check the water pressure and if necessary top it up;
11 Close the filling loop;
12 Activate the functions in use (heating, DHW and/or pump);
13 If A xx appears on the display, wait for 17 minutes;
14 Check the water pressure and if necessary top it up to 1,5 to 1,7 bar
15 Close the filling loop;
16 Press the 'STEP'-button;
17 Be sure that the filling loop is closed.
18 After the automatic de-aeration program (A xx) is finished the boiler will return to the Good state or Technical read out.

Check the water pressure regularly and top up the installation when necessary.
The working pressure of the installation should be between 1.5 and 1.7 bar when the installation is cold.

It can take a while before all air has disappeared from a filled installation. Especially in the first week noises may be heard which indicate the presence of air. The automatic air vent in the boiler will make this air disappear, which means the water pressure can reduce during this period and therefore topping up with water will have to be done.

10.1 Hot water supply

Apply the water pressure to the DHW(open main valve and/or stop valve of the safety group).

Vent the DHW facility and the hot water installation by opening a hot water tap. Leave the tap open for as long as required until all air has disappeared from the DHW installation and only water is flowing from the tap.

11 Commissioning the boiler

Before the boiler is fired, ensure that the boiler and the system are well vented and free of air. Purge the gas line between the gas meter and the boiler and carry out a gas soundness test as specified in the current Gas Safety, Installation & Use Regulations. The boiler does not require adjustment of the burner pressure and air quantity because it is self adjusting and is factory set at the correct value.

11.1 Central Heating system

Provided there is a heat requirement from the thermostat or control, the central heating program will be put into operation by means of the key (central heating program). The circulation pump will start circulating and the boiler will start the burner.

11.2 Hot water supply

Provided there is a heat requirement from the cylinder the hot water program will be put into operation by means of the key (hot water program).

11.3 Adjustments

When the boiler is installed it is in principal ready for use. All adjustments of the boiler control are already pre-programmed for a heating system with radiators/convectors with a flow temperature of 85°C. The adjustments are described in the Parameter chapter on page 28.
In certain cases adjustment have to be altered in case of :

- Lower flow temperature

Read through the Parameter chapter to adjust the boiler to its installation.
Contact ATAG Heating in case of doubt.

Please follow next procudere to alter adjustments:

Altering adjustments

STEP 1 **Press the Mode-key for 5 secondss.**
The display shows COdE followed by an arbitrary number;

STEP 2 **Press by means of the + or the - key until the code C123 is shown;**

STEP 3 **Press the STORE-key to confirm the code (code blinks1 x).**

Now you have acces to the installer level. There are 4 chapters:

- PARA *Parameters*
- INFO *Information chapter (no adjustments possible)*
- SERV *Service chapter*
- ERRO *Error-chapter (no adjustments possible)*

The content of the chapters is described on the following pages.

STEP 4 **Press briefly the MODE-key to select one of the 4 chapters, i.e. PARA;**

STEP 5 **Press once or more briefly on the STEP-key to select a Parameter**
(parameter visible on the left, value on the right) ;

STEP 6 **Alter the value, if necessary/possible, by means of the + or the - key**

STEP 7 **Press briefly on the STORE-key to confirm the alteration.**
When you have to change more values, repeat from step 5.

STEP 8 **Press once or more on the MODE-key until StBY or Good is shown:**
After a few seconds the text StBY will be replaced by the technical read-out or Good-state (Depending from the position the acces code is keyed in)

When you want to return from an arbitrary position to the original read out press once or more on the MODE-key until StBY is shown.

When during 20 minutes no single key is used the display will return automatically to its original read-out (Good state or technical read out)

Parameter chapter

PARA	Factory	Description	Range
1	85°C	maximum flow temperature CH	20 - 90°C
2*	01	type of CH installation:	
		radiators; air heating; convectors: *T max. flow 85°C; K factor heating line 2.3; gradient 5°C/min; gear differential 6°C*	01
		radiators with large surface areas or underfloor heating as additional heating: *T max. flow 70°C; K factor heating line 1.8; gradient 5°C/min; gear differential 5°C*	02
		under floor heating with radiators as additional heating: *T max. flow 60°C; K factor heating line 1.5; gradient 4°C/min; gear differential 4°C*	03
		full under floor heating: *T max. flow 50°C; K factor heating line 1.0; gradient 3°C/min; gear differential 3°C*	04
3	max.	maximum power CH in kW	min-max
4*	00	control principal with on / off thermostat:	
		100 % on / off thermostat	00
		100 % on / off weather dependant	01
5*	2.3	heating line K-factor (see also heating line graph)	0.2 - 3.5
6*	1.4	heating line exponent (see also heating line graph)	1.1 - 1.4
7*	-10	heating line climate zone (see also heating line graph)	-20 - 0
10*	0°C	fine adjustment heating line day temperature	-5 until 5°C
11*	0°C	fine adjustment heating line night temperature	-5 until 5°C
14	7	gradient speed	0 - 15
15*	0	booster after night reduction:	
		no	00
		yes	01
23	-3°C	frost safety temperature	-20 until 10°C
31	63°C	switch-off temperature of additional cylinder with E boiler	40 - 80°C
36	0	type of three-way valve	
		VC 2010 / VC 8010 / VC 8610	00
		VC 6940 modulating	01
43	max.	maximum power DHW in kW	min-max
45	0	Not applicable	00 - 01
89	00	address setting interface:	
		Spare	-01
		ATAG Bus thermostat (BrainQ, Smart)	00
		boiler 1 - 8 in cascade	00 - 07

Information chapter

INFO	Value	Description
1	°C	flow water temperature T1
4	°C	return water temperature T2
5	°C	DHW temperature T3
7	°C	outside temperature T4
8	°C	flue gas temperature T5
16	%	actual power in %
17	kW	actual power in kW
18	kW	actual load in kW
20		indication bus communication
21	GJ	consumption total in GJ (.. x 33 = .. m3)
22	GJ	consumption CH in GJ (.. x 33 = .. m3)
23	GJ	consumption DHW in GJ (.. x 33 = .. m3)
24	hour	total number of burner run hours
25	hour	number of burner run hours CH
26	hour	number of burner run hours DHW
32	hour	total number of hours counter
37	hour	total number of run hours pump CH and DHW
46	hour	within how many hours is service required

Service chapter			
SERV	**Value**	**Description**	**Range**
1	OFF	boiler in operation with burner function on	OFF - max.
2	OFF	fan adjustable and burner off	OFF - max.
3	OFF	pump adjustable with burner on	OFF - max.
4	OFF	showroom position ON = active and OFF = non active	ON - OFF

Error chapter		
ERRO	**Value**	**Description**
Err.L - Err.5		Last saved error until 5 last predecessing errors
1		error code
2		operation status boiler
3	°C	flow water temperature T1
4	°C	return water temperature T2
5	kW	load
6	%	pump capacity

Parameter-, Info-, Service- and Error-chapters Table 6

*** Most of the data in this table can be requested by the BrainQ. Most of the adjustments which are stated in this table are unnecessary when in combination with the ATAG BrainQ thermostat and will be taken care of by the BrainQ itself and do not have to be adjusted. For further information regarding to the BrainQ thermostat, please refer to the ATAG BrainQ installation manual.**

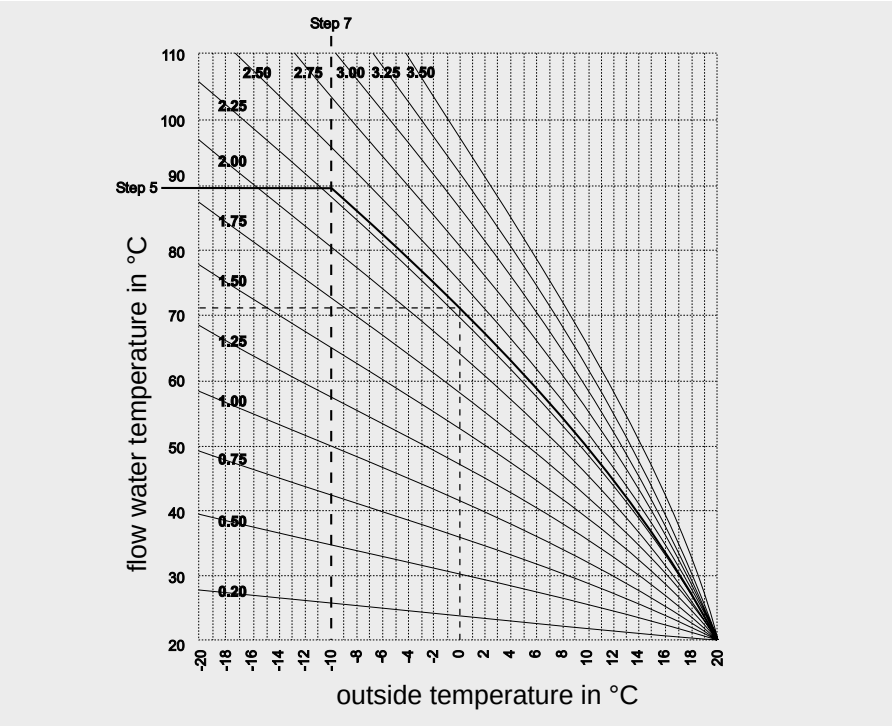

heating line adjustments Parameter Step 6 and 7 graph 2

11.4 Activating factory settings (green key function)

To activate the factory settings again please follow the next procedure (Note: all altered adjustments will be set back):

- Select, when necessary, the technical read out;
- Select with the MODE-key chapter PARA;
- Press the STORE-key.
  The word "Copy" will appear and the facory settings are active again.

12 Isolating the boiler

In some situations it may be that the entire boiler must be switched off. By switching off the three keys with the lamps for central heating, hot water and pump program (, or), the boiler is switched off. Leave the plug in the wall socket, which means the circulation pump and the three-way valve are activated once every 24 hours in order to prevent jamming.

In the event of frost danger it is advisable to drain the boiler and/or the installation.

13 Commissioning

Work on the boiler must be carried out by a competent person, (Ref: Gas Safety, Installation & Use Regulations) using correctly calibrated instruments with current test certification.

To commission the boiler the casing has to be removed.
Remove the lower part of the casing which covers the expansion vessel (if present) forward. The casing is fixed by 4 quick release clamps and 5 screws (4x 1 clamp and 1 behind door). After removing the screws, unlock the clamps, now the casing can be removed forward.

The boiler settings, such as burner pressure and adjustment of the air quantity are unnecessary, due to the fact that the boiler operates with a so-called zero pressure control. This means the correct gas quantity is controlled by the suction operation of the fan. The fine adjustment which is carried out at the factory is one off, which means that adjusting of these values is unnecessary. Only when replacing the gas valve, venturi and/ or the fan, does the zero pressure and the incorrect CO2 adjustment have to be checked and, if necessary, adjusted to the correct value.

Always check the installation of all parts through which gas flows (using leak-search spray)

13.1 Checking for contamination

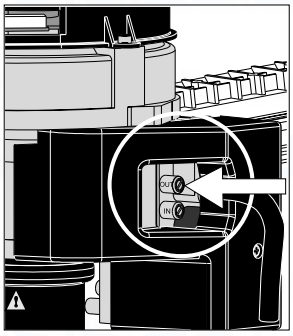

Check point contamination
figure 12

In order to be able to check the boiler for contamination in the following running years it is advisable to measure the maximum air displacement in the boiler when putting the boiler into operation. This value can be different with each type of boiler.

In order to be able to measure this value follow the next procedure:

- Press the Central Heating and DHW buttons once to ensure that the boiler is OFF and not firing.
- Press the MODE-key for 5 seconds.
- The diplay will show COdE followed by an arbitrary number;
- Select by means of the + or the - key the code C123;
- Press the Store-key to confirm the code (code blinks 1 x);
- Press the MODE-key until SERV is shown;

- Press the STEP-key until 2 is shown;
  alternately 2 and OFF will be shown.

- Undo the upper measuring nipple on the gas valve open (fig. 12);

- Connect the hose of the digital pressure gauge to the upper measuring nipple of the gas valve

- Press the + key until the maximum value is achieved;
  The fan will function to its maximum revolutions (burner stays off)

- Measure the under pressure and write down this value.
  At the next commissioning visit this value may drop 20% of its original value on the moment of intallation. When this value is dropped more than 20% the boiler needs maintanance.

- Press the - key until OFF is shown (keep key pressed)
  With this the procedure is finished.

13.2 Checking of the zero pressure control

The zero pressure control is set at the factory. To measure this value you need a difference pressure gauge with a range of +0,2 to -0,8 mbar. Follow the next procedure:

- Turn the boiler on so that the boiler is alight.

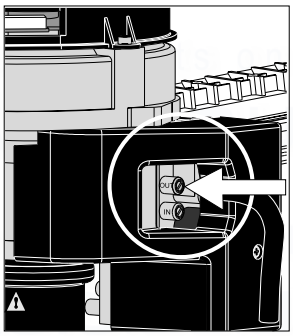

Check point contamination
figure 13

- Press the MODE-key for 5 seconds.

- The diplay will show COdE followed by an arbitrary number;

- Select by means of the + or the - key the code C123;

- Press the Store-key to confirm the code (code blinks 1 x);

- Press the MODE-key until SERV is shown;

- Press the STEP-key once until 1 is shown;
  alternately 1 and OFF will be shown.

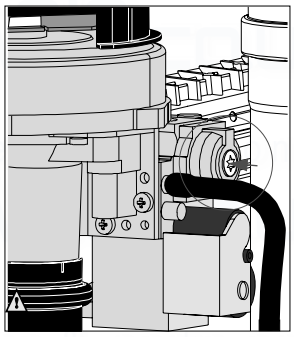

Adjustment zero pressure
figure 14

- Undo the upper measuring nipple on the gas valve open (fig. 13);

- Connect the hose of the digital pressure gauge to the upper measuring nipple of the gas valve

- Press the - key until the minimum value is achieved;
  The fan will function to its minimum revolutions (burner is active)

- Measure the negative pressure. Value should be +/- 0 to -4Pa (+/- 0 to -0,04 mbar).

- If the zero pressure deviates too much:
  - Remove black cover of the gas valve
  - Remove cap with Torx key (fig. 14)
  - Turn slightly the Torx screw behind the cap:
    Turn left is positive pressure deviation
    Turn right is negative pressure deviation

- Ending this procedure is done by pressing the Reset key.

- Proceed by checking the CO2 value and correct it if necessary.

13.3 Checking the CO_2

The CO_2 percentage is factory-set. This has to be checked at commissioning, maintance and faults.

This can be checked by means of the following procedure:
- Remove the black cover of the gas valve by unscrewing the sealed screw.
- Put the boiler into operation and take care that it can deliver its heat;

Tip: If there is no demand for heat on CH, turn the hot water tap completely open and measure the CO_2.

- Press the MODE-key for 5 seconds.
- The diplay will show COdE followed by an arbitrary number;
- Select by means of the + or the - key the code C123;
- Press the Store-key to confirm the code (code blinks 1 x);
- Press the MODE-key until SERV is shown;
- Press the STEP-key once until 1 is shown;
  alternately 1 and OFF will be shown.
- Calibrate the CO_2 meter ;
- Place the lance of the CO_2 meter into the check point (see fig. 15);
- Press the + key until the maximum value (in kW) is achieved;
  The boiler will burn on full load (value on display in kW)
- Check Table 7 for the correct CO_2 percentage (page 33)
- Let the CO_2 meter do its measuring procedure.
- Adjust, if necessary, the adjustment screw to correct the CO_2 value (see fig. 16).

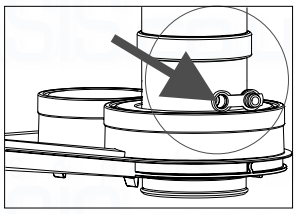

checkpoint CO_2
figure 15

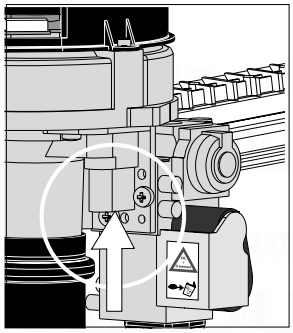

adjustment screw CO_2
figure 16

Ending the CO_2 measuring procedure:
- Press the - key until OFF is shown (keep key pressed).
  With this the procedure has ended..
- Replace the black cover on the gas valve and fix it with the screw.

14 Maintenance

Maintenance or changes to the boiler may only be carried out by an authorised technician.

14.1 The frequency of maintenance

We advise that an inspection is carried out every year with an overhaul every three years. When doing this the circumstances of the boiler's location must be taken into account. From this one can determine whether to deviate from this advice.
Please contact the country distributor for further guidance on the frequency and service requirements.

14.2 Maintenance activities

To carry out the maintenance activities please follow the next procedure:
- switch off the power supply;
- remove the four screws out of the quick release fasteners;
- remove the screw behind the door on the front of the casing;
- remove the casing towards the front.

<u>The air box</u>
- the casing is also the airbox
- clean the casing with a cloth with a simple (non-abrasive) cleaning agent;

<u>The fan unit and burner cassette</u>
- remove the electrical connection plug from the gas valve and fan motor;
- loosen the nut of the gas pipe under the gas valve;
- replace the gasket with a new one;
- loosen the front cross head screw of the black plastic silencer;
- after this turn the two clamping rods ¼ turn and remove them by pulling them forward. Note the right turning direction (red indicator);
- slightly lift the fan unit and remove it towards the front of the heat exchanger;
- remove the burner cassette out of the fan unit;
- check the burner cassette for wear, pollution and possible cracks. Clean the burner cassette with a soft brush and vacuum cleaner. If burners are cracked replace the complete burner cassette;
- replace the gaskets between burner and fan unit and the gasket between fan unit and heat exchanger;
- check the venturi and the gas-air distribution plate for pollution and clean this part, if necessary with a soft brush and vacuum cleaner. If the air box contains a lot of dirt it is plausible that the fan itself is dirty as well. To clean this, the fan has to be removed from the hood and the venturi. Clean the fan with a soft brush and a vacuum cleaner. Replace the gasket and ensure that all gaskets of the fan parts are mounted correctly.

<u>Heat exchanger</u>
- check the heat exchanger for contamination. Clean this if necessary with a soft brush and a vacuum cleaner. Prevent dirt falling down into the heat exchanger.
  Flushing the heat exchanger from the top down is not permitted

Refitting of the components is done in reverse order.

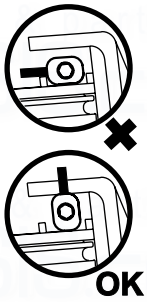

Make sure that during refitting the clamping rods they are put in the right position. They should be turned vertical.

Ignition electrode

The replacement of the electrode is only necessary when the electrode is worn off. This can be checked by measuring the ionisation current. The minimum ionisation current has to be higher the 4µA on full load.
If the viewing glass is damaged the complete electrode must be replaced.
Replacement goes as follows:

- remove the electrical connections of the electrode;
- press the clips on both sides of the electrode to both sides and remove the complete electrode;
- remove and replace the gasket;

Refitting of the components is done in reverse order.

Siphon and condensate tray

- first remove the condensate cup;
  Check this for pollution. If there is no sign of strong pollution it is not necessary to clean the condense tray. If there is a strong pollution in the cup it is necessary to remove and clean the condensate tray;
- check the O-rings of the cup as well as those from the pipe and replace if necessary;
- clean both part by flushing it with clean water;
- grease the O-rings again with acid free O-ring grease to make fitting easier;
- if there is a leak at the siphon cup or tray the complete siphon unit has to be replaced by S4421200;
- remove the plug from the flue gas sensor if present;
- turn the two short clamping rods ¼ turn and remove them by pulling them forward; Note the right turning direction (red indicator);
- lift the flue gas pipe out of the condensate tray;
- press the condensate tray carefully downwards and remove it by pulling it forward;
- replace the gasket between condensate tray and heat exchanger by a new one;
- clean the condensate tray with water and a hard brush;
- check the condensate tray for leaks.

Refitting is done in reverse order.
Note thate the gasket of the condensate tray seals completely.

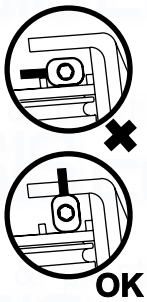

Make sure that during refitting of the clamping rods they are put in the right position. They should be turned vertically.

Alway replace all removed gaskets of dismantled parts during the maintenance activities.

Put the boiler into operation and check the CO_2 (see page 30).

Replace the secure screws A, B, C, D and E in the quick-release fasteners after the maintenance activities.

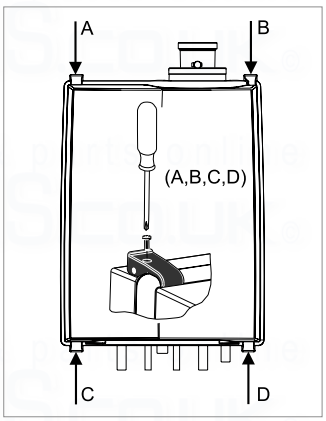

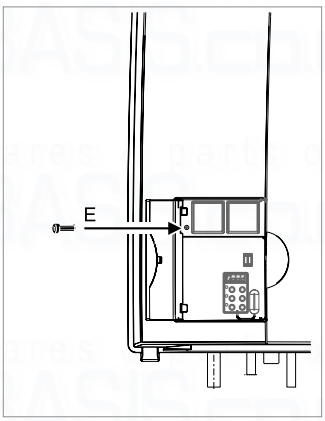

vergrendeling mantel figuur 13

14.3 Warranty

For warranty conditions we refer to the warranty card supplied with the boiler.

15 Technical specifications

		ATAG E-Serie			
		Combi		Solo	
Boiler type		**E22C**	**E32C**	**E22S**	**E32S**
Input Hs CH	kW	22	32	22	32
Q_n Output Hi CH	kW	19,8	28,8	19,8	28,8
Q_{nw} Input Hs DHW		25	38		
Efficiency class according BED		★★★★	★★★★	★★★★	★★★★
Efficiency according EN677 (36/30°C part load, Hi)	%	109,7	109,9	109,7	109,9
Efficiency according EN677 (80/60°C full load, Hi)	%	97,6	97,9	97,6	97,9
Modulation range CH (capacity 80/60°C)	kW	4,4 - 19,3	6.1 - 28,2	4,4 - 19,3	6.1 - 28,2
Modulation range CH (capacity 50/30°C)	kW	4,9 - 21,0	6.8 - 30,6	4,9 - 21,0	6.8 - 30,6
Nox class EN483		5			
CO_2	%	9			
Temperature class for PP flue		T100			
Appliance type		C13 C43 C53 C63 C83			
Flue gas temp. CH (80/60°C on full load)	°C	68			
Flue gas temp. CH (50/30°C on low load)	°C	31			
Categories		II2L3P			
Gas consumption G20 CH (DHW) (at 1013 mbar/15°C)	m^3/h	2,10 (2,38)	3,05 (3,62)	2,10	3,05
Electr. power consumption max.	W	145			
Electr. power consumption stand by	W	10			
Current	V/Hz	230/50			
Fuse rating	A	5			
Degree of protection acc. EN 60529		IPX4D			
Weight (empty)	kg	39	40	37	40
Width	mm	500			
Height	mm	650			
Depth	mm	395			
Water content CH	l	3,5	5	3,5	5
Water content DHW	l	0,5	0,7		
After run time pump CH	min	15			
After run time pump DHW	min	1	1		
P_{MS} Water pressure min./max.	bar	1/3			
P_{MW} Water pressure DHW max.	bar	8			
Flow temperature max.	°C	85			
Pump type		UPS20-50	UP20-60	UPS20-50	UP20-60
Available pump height CH	kPa	28	17	27	15
Label		Sedbuk A rate			
DHW flow (at 38°C)	l/min	10,7	17,5		
DHW flow (at 35°C ΔT)	l/min	8,6	14,0		
DHW temperature (T_{in}=10°C)	°C	60	60		
Minimum flow rate	l/min	<2,0	<2,0		
Content expansion vessel	l	8	12	8	12
Pre-charge pressure expansion vessel	bar	1	1	1	1
CE product identification number(PIN)		0063BR3405			

Technical specifications

Table 7

16 Parts of the boiler

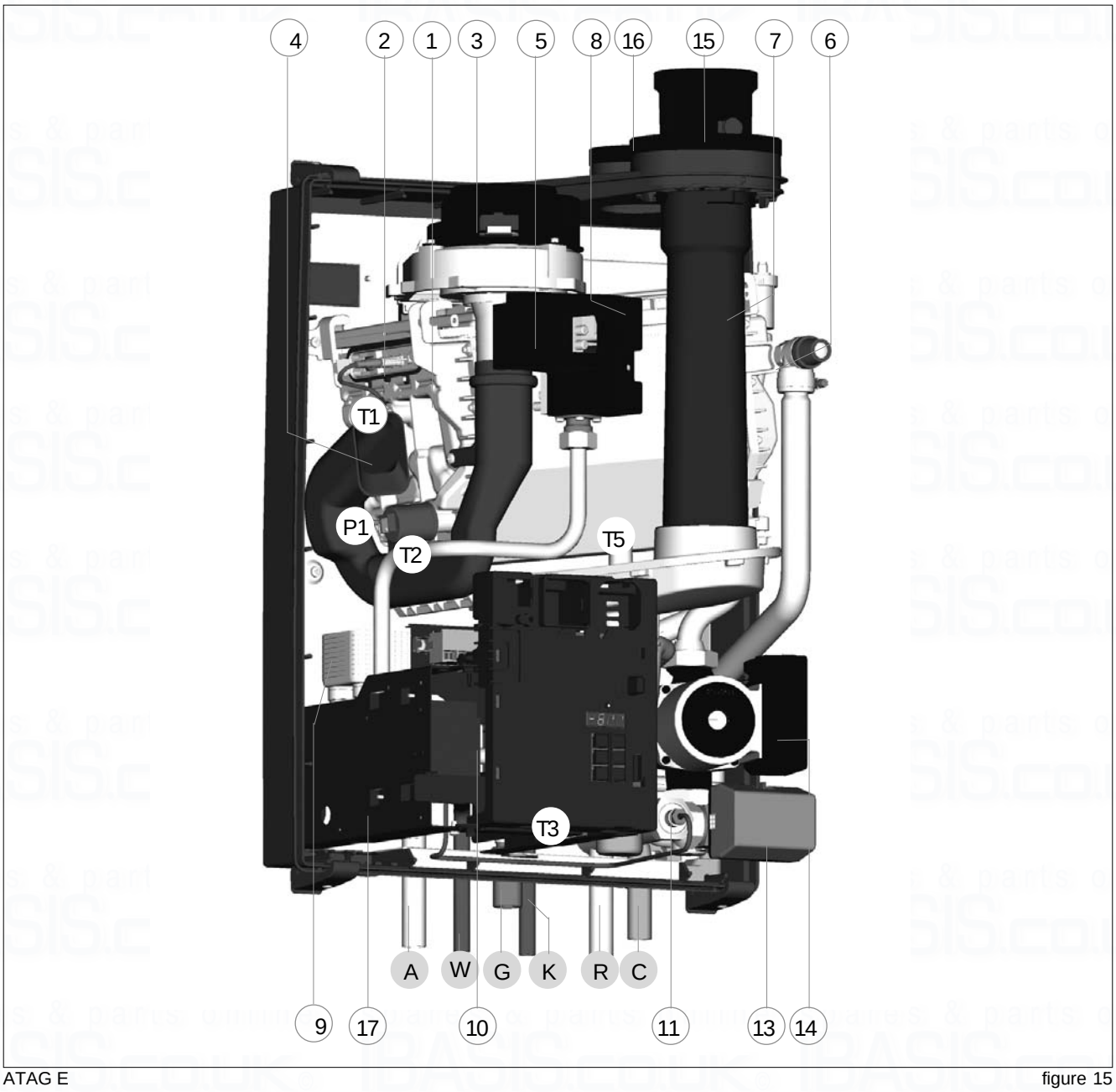

ATAG E

figure 15

1 heat exchanger	8 ceramic burner cassette	15 flue gas duct
2 ignition unit	9 plate heat exchanger DHW (Combi)	16 combustion air supply
3 fan unit	10 operating panel	17 type plate
4 air inlet damper	11 Control Tower (CMS)	
5 gas valve	12 water filter return CH	
6 safety valve	13 three-way valve	
7 automatic air vent	14 circulation pump	

T1 flow sensor	P1 water pressure sensor	G gas pipe
T2 return sensor		A flow connection central heating
T3 sensor DHW (combi) and flow switch		R return connection central heating
		C condensate pipe
		K cold water pipe (combi)
		W hot water pipe (combi)

17 Installation examples

17.1 Radiator installation with thermostatic radiator valves

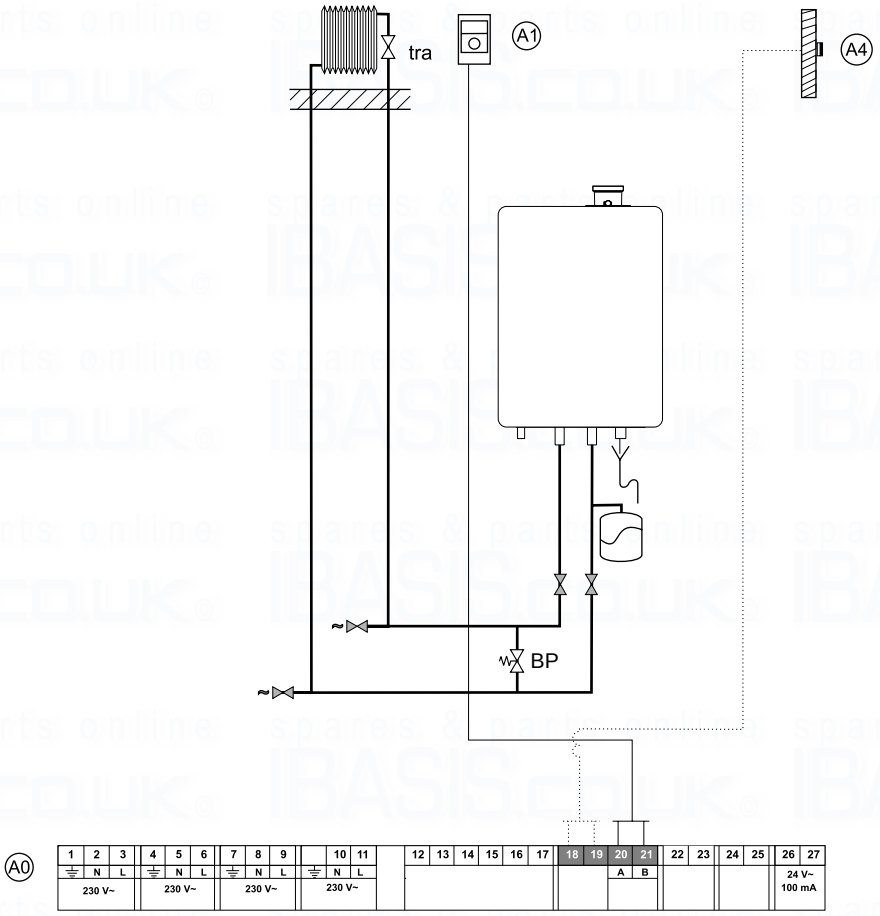

installation example

figure 16

A Boiler:

A0	Connection terminal ATAG E	
A1	ATAG BrainQ thermostat	RSC
A4	Outside sensor	ARV12

tra	Thermostatic radiator valve
BP`	Automatic by-pass

⚠ Always use a by-pass in combination with thermostatic radiator valves.

17.2 Radiator installation with underfloor heating zone

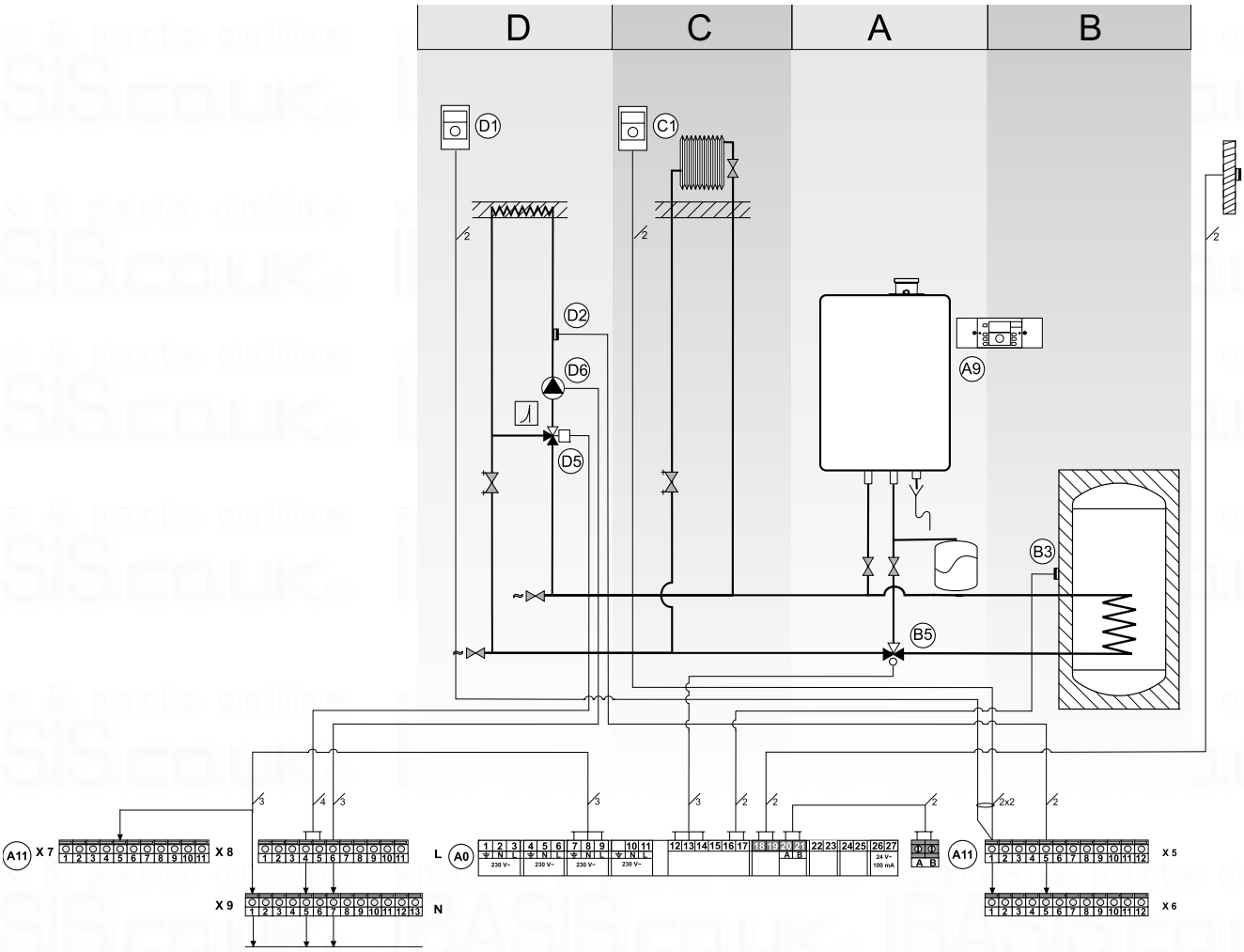

installation example

figure 17

A Boiler:

A0	Connection terminal ATAG E	
A4	Outside sensor	ARV12
A9	ATAG MadQ zone coltroller	23BC
A11	Connection terminal MadQ wall mounted	

B Cylinder:

B3	Cylinder sensor
B5	Three-way valve cylinder

C Direct zone:

C6	Pump direct zone

D Mixing zone:

D2	Flow sensor mixing zone	
D5	Three way valve mixing zone	230V~
D6	Pump mixing zone	

See also the installation manual ATAG MadQ Zone controller.

18 Error indication

A detected error is indicated on the display by means of a blocking or error messages. A distinction should be made between these two messages due to the fact that blocking can be of a temporary nature, however, error messages are fixed lockings. The control will try its utmost to prevent locking and will temporarily switch off the boiler by blocking it. Below is a list of some of the messages.

Blocks bL with a number in the last 2 positions.

bL60 Block 60:
Incorrect parameter setting of the minimum or maximum power.

bL67 Block 67:
A ΔT has been detected between flow and return sensor whereas the burner is not in operation. After the ΔT has disappeared the block will disappear.

bL80 Block 80:
Maximum flue gas temperature has been exceeded (if present). The block will not be cancelled until the flue gas temperature has lowered to a correct figure.

bL81 Block 81:
The flue gas sensor is not connected although it was connected to the control. The burner is blocked until the flue gas sensor is reconnected.

bL82 Block 82:
The flue gas sensor has short-circuited, heat requirement blocked and pump capacity at minimum.

bL85 Block 85:
The control has not detected a water flow. The venting cycle is started. If during this cycle water flow is detected, the venting cycle is ended and the burner is released.

bL86 Block 86:
The frequence of the power supply deviates more than 2,5Hz (<47,5Hz, >52,5Hz)

Error E with a number in the last two positions.

E 00	Error 00:	Poor flame-forming
E 01	Error 01:	short-circuit of 24 volt circuit
E 02	Error 02:	no flame-forming
E 04	Error 04:	the control unit has detected an error
E 05	Error 05:	fault control unit
E 12	Error 12:	fuse 24 volt/3AT faulty
E 19	Error 19:	fault control
E 28	Error 28:	number of revolutions not reported back from fan

CE DECLARATION OF CONFORMITY

Hereby declares ATAG Verwarming Nederland BV that,

the condensing boiler types: ATAG

E22S E22C
E32S E32C

are in conformity with the provisions of the following EC Directives, including all amendments, and with national legislation implementing these directives:

Directive		Used standards
Gas Appliance Directive	90/396/EEC	EN483: 1999 EN50165: 1997
Efficiency Directive	92/42/EEC	EN677: 1998
Low Voltage Directive	73/23/EEC	EN50165: 1997 EN60335-1: 1994
EMC Directive	89/336/EEC	EN61000-3-2: 2000 EN61000-3-3: 1995 EN61000-6-1: 2001 EN61000-6-3: 2001

Report numbers

	GAD	ED	LVD	EMC D
ATAG E	177405	177405	177405	06C00165

and that the products are in conformity with EC type-examination certificate number E0430, as stated by KIWA-Gastec Certification BV, Apeldoorn, The Netherlands.

Date : 1 May 2006

Signature :

Full name : P. Kalverboer
CEO

ATAG Verwarming

Adres: Galileïstraat 27, 7131 PE Lichtenvoorde • **Postadres:** Postbus 105, 7130 AC Lichtenvoorde
Telefoon: +31(0) 544 391777, **Fax:** +31(0) 544 391703
E-mail: info@atagverwarming.com **Internet:** http//www.atagverwarming.nl

20 KIWA Certificate

Certificate

kiwa
Partner for progress

UK APPROVAL
Certificate Number: 0401702

Date Issued: 31st March 2006
Date Expired: 22nd January 2009

Description: ATAG E Range of wall mounted combination condensing boilers

Product Designation: ATAG E Range 18-32Kw

This is to certify that the above range of products manufactured / supplied by

ATAG Verwarming Nederland BV

has been tested and found to comply with the requirements of the Water Supply (Water Fittings) Regulations 1999 for England and Wales, the Water Byelaws 2000, Scotland and the Water Regulations Northern Ireland.

This certificate must be read in conjunction with the acceptance letter for this product.

This approval is intended for compliance with the above Regulations and must not be considered equivalent to the product certification provided by Kiwa N.V

To comply with the Regulations and Byelaws all products require the correct installation. Details of the installation requirements (IRN's) can be obtained from the acceptance letter supplied with this certificate.
Applicable IRN's for this certificate – R001, R140, R360

Authorised Signature
Kiwa Quality Services Ltd

Kiwa Quality Services Ltd
The Innovation Centre
Victoria Park
Festival Drive
Ebbw Vale
Gwent
NP23 8XA
UNITED KINGDOM
Tel: 0044 (0) 1495 356795
Fax: 0044 (0) 1495 350020
E-mail: info@kiwa.co.uk
Web: www.kiwa.co.uk

Certificate Issued To –
ATAG Verwarming Nederland BV
Galileistraat 27
7131 PE
Lichtenvoorde
The Netherlands

Tel: 0031 544 391 777
Fax: 0031 544 391 703

kiwa approved product
UK WATER SUPPLY REGULATIONS

kiwa
approved
product

UK WATER SUPPLY
REGULATIONS

ENERGY EFFICIENCY
RECOMMENDED

benchmark

Ditributor for UK
ATAG Heating UK Ltd. • Unit 3 • Beaver Trade Park • Quarry Lane Chichester West Sussex PO19 8NY
Phone: 01243 815 770 • Fax 01243 839 596 • E-mail: info@atagheating.co.uk • Internet: www.atagheating.co.uk

Ditributor for Ireland
Total Energy Management Ltd. • Unit 9 • Ballybritt Industrial Estate • Monivea Road Galway Ireland
Phone: 091 769174 • Fax 091 769485 • E-mail: info@tem.ie • Internet: www.tem.ie

This renewed publication cancels all previous installation instructions. The company reserves the right to change the specifications and dimensions without prior notice.

E. & O. E.