Please leave these instructions with the user

Baxi 100 HE

Wall Mounted Powered Flue Condensing Boiler

Gas Fired Central Heating Unit

Installation and Servicing Instructions

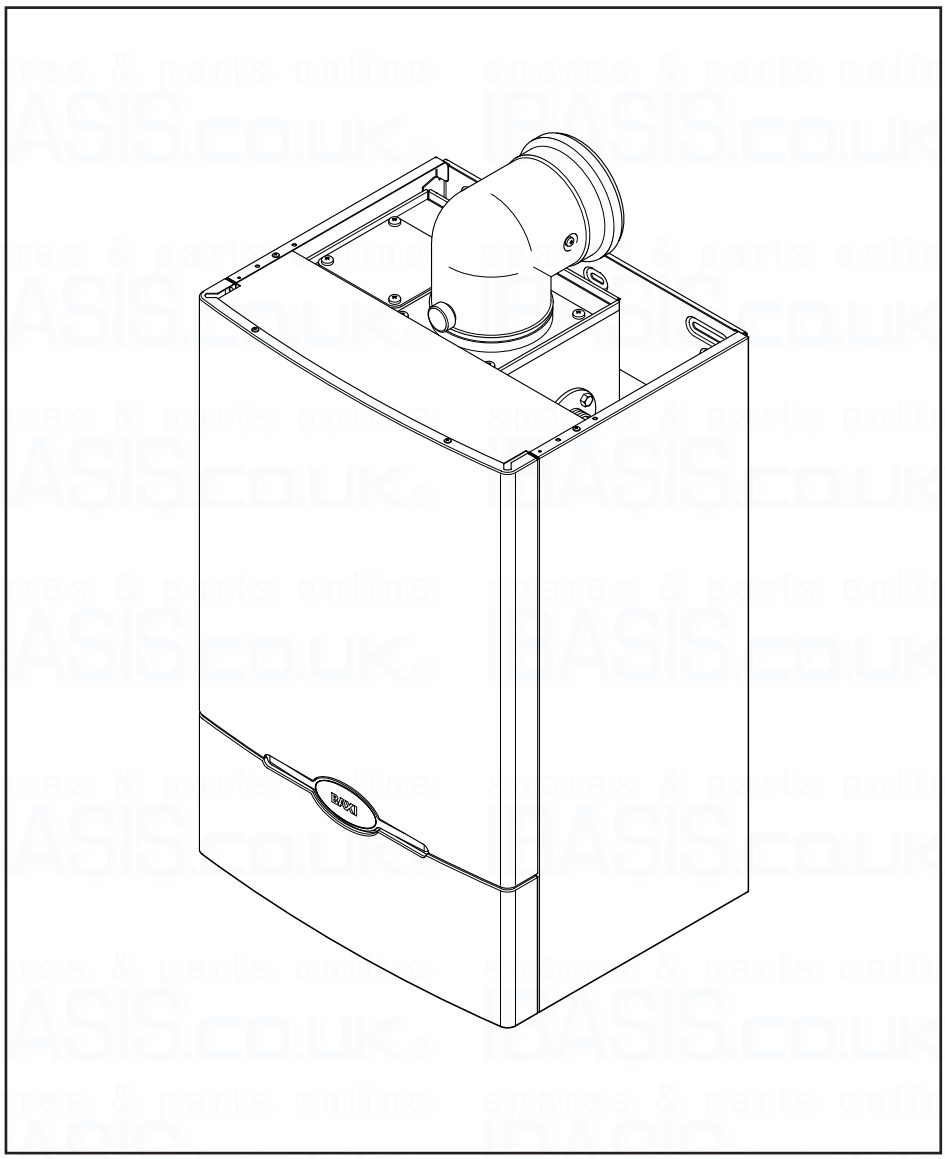

BAXI

spares & parts online BASIS.CO.UK

Natural Gas

Baxi 100 HE
G.C.N° 41 075 32

Baxi UK Limited is one of the leading manufacturers of domestic heating products in the UK.

Our first priority is to give a high quality service to our customers. Quality is designed into every Baxi product - products which fulfil the demands and needs of customers, offering choice, efficiency and reliability.

To keep ahead of changing trends, we have made a commitment to develop new ideas using the latest technology - with the aim of continuing to make the products that customers want to buy.

Everyone who works at Baxi has a commitment to quality because we know that satisfied customers mean continued success.

We hope you get a satisfactory service from Baxi. If not, please let us know.

The boiler meets the requirements of Statutory Instrument " The Boiler (Efficiency) Regulations 1993 N° 3083" and is deemed to meet the requirements of Directive 92/42/EEC on the energy efficiency requirements for new hot water boilers fired with liquid or gaseous fuels:-

Type test for purpose of Regulation 5 certified by:
Notified Body 0086.

Product/Production certified by:
Notified Body 0086.

For GB/IE only.

Baxi is a BS-EN ISO 9001
Accredited Company

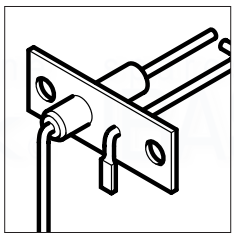

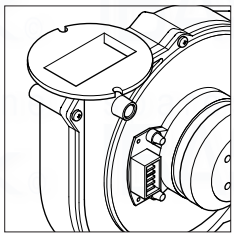

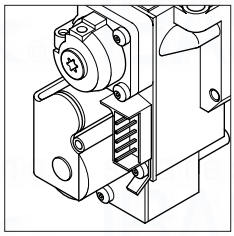

Contents

Section		Page
1.0	Introduction	4
2.0	General Layout	5
3.0	Appliance Operation	6
4.0	Technical Data	7
5.0	Dimensions and Fixings	8
6.0	System Details	9
7.0	Site Requirements	12
8.0	Installation	17
9.0	Electrical	23
10.0	Commissioning the Boiler	25
11.0	Fitting the Outer Case	26
12.0	Servicing the Boiler	27
13.0	Changing Components	29
14.0	Fault Finding	36
15.0	Short Parts List	44

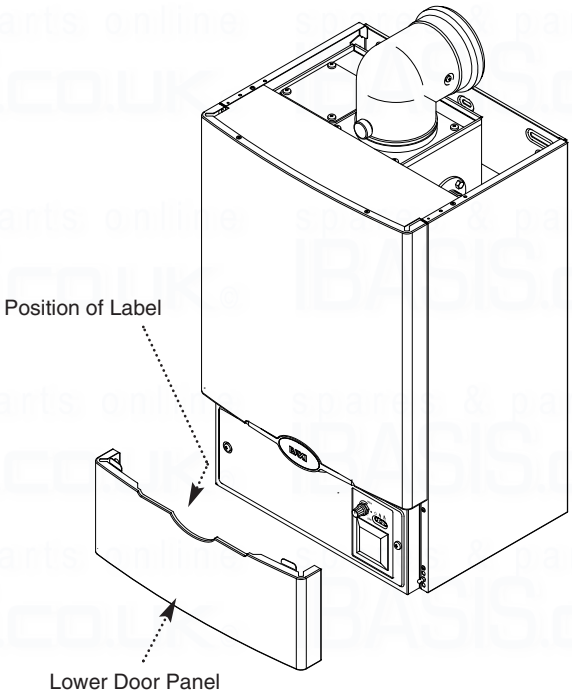

Fig. 1

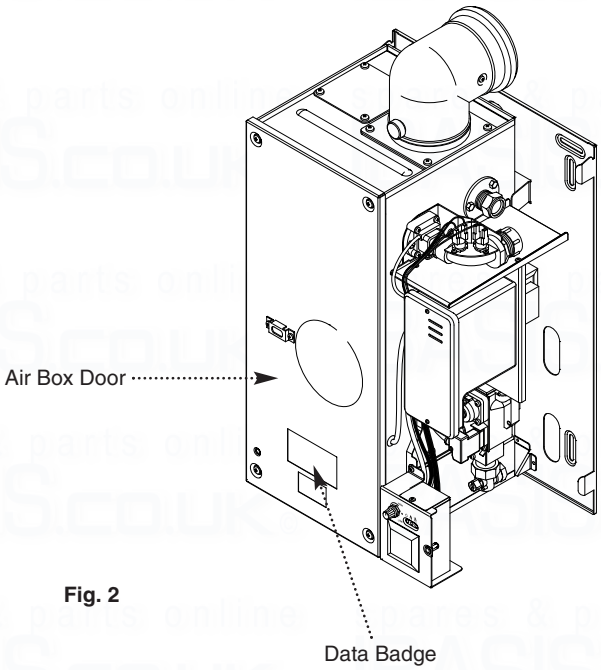

Fig. 2

"Benchmark" Log Book

As part of the industry-wide "Benchmark" initiative all Baxi boilers now include an Installation, Commissioning and Service Record Log Book. Please read the Log Book carefully and complete all sections relevant to the appliance and installation. These include sections on the type of controls employed, flushing the system, burner operating pressure etc. The details of the Log Book will be required in the event of any warranty work. Also, there is a section to be completed at each subsequent regular sevice visit.

1.0 Introduction

Baxi UK Limited declare that no substances harmful to health are contained in the appliance or used during appliance manufacture.

NOTE: This appliance must be installed in accordance with the manufacturer's instructions and the regulations in force, and only used in a suitably ventilated location.

All systems must be thoroughly flushed and treated with inhibitor (see Section 6.2).

Read the instructions fully before installing or using the appliance.

1.1 Description

1. The Baxi 100 HE is a gas fired room sealed fan assisted condensing central heating boiler.

2. The maximum output of the boiler is preset at 75,000 Btu/hr. The boiler will automatically adjust down to 30,000 Btu/hr according to the system load. If required, the output can be set to 100,000 Btu/hr. Please refer to section 8.8.

3. It is designed for use on Natural Gas (G20).

4. The boiler is suitable for fully pumped open vented central heating and domestic hot water systems and sealed systems.

5. A label giving details of the model, serial number and Gas Council number is situated on the rear of the lower door panel (Fig. 1).

6. The boiler data badge is positioned on the air box door (Fig. 2).

7. The boiler is intended to be installed in residential / commercial / light industrial E.M.C. environments on a governed meter supply only.

8. The boiler must be installed with one of the purpose designed flues such as the standard horizontal flue kit, part n° 236921.

1.2 Important Information

This product contains Refractory Ceramic Fibres (R.C.F.) which are man-made vitreous silicate fibres. Excessive exposure to these materials may cause temporary irritation to eyes, skin and respiratory tract. Care must be taken when handling these articles to ensure the release of dust or fibres is kept to a minimum.
To ensure that the release of fibres from these articles is kept to a minimum, during installation and servicing it is recommended that a H.E.P.A. filtered vacuum is used to remove any dust, soot or other debris accumulated in and around the appliance. This should be performed before and after working on the installation.
It is recommended that any replaced item(s) are not broken up but sealed within heavy duty polythene bags and clearly labelled "R.C.F. waste". This is not classified as "hazardous waste" and may be disposed of at a tipping site licensed for the disposal of industrial waste.
Protective clothing is not required when handling these articles but it is recommended that gloves are worn and the normal hygiene rules of not smoking, eating or drinking in the work area are followed and always wash hands before eating or drinking.

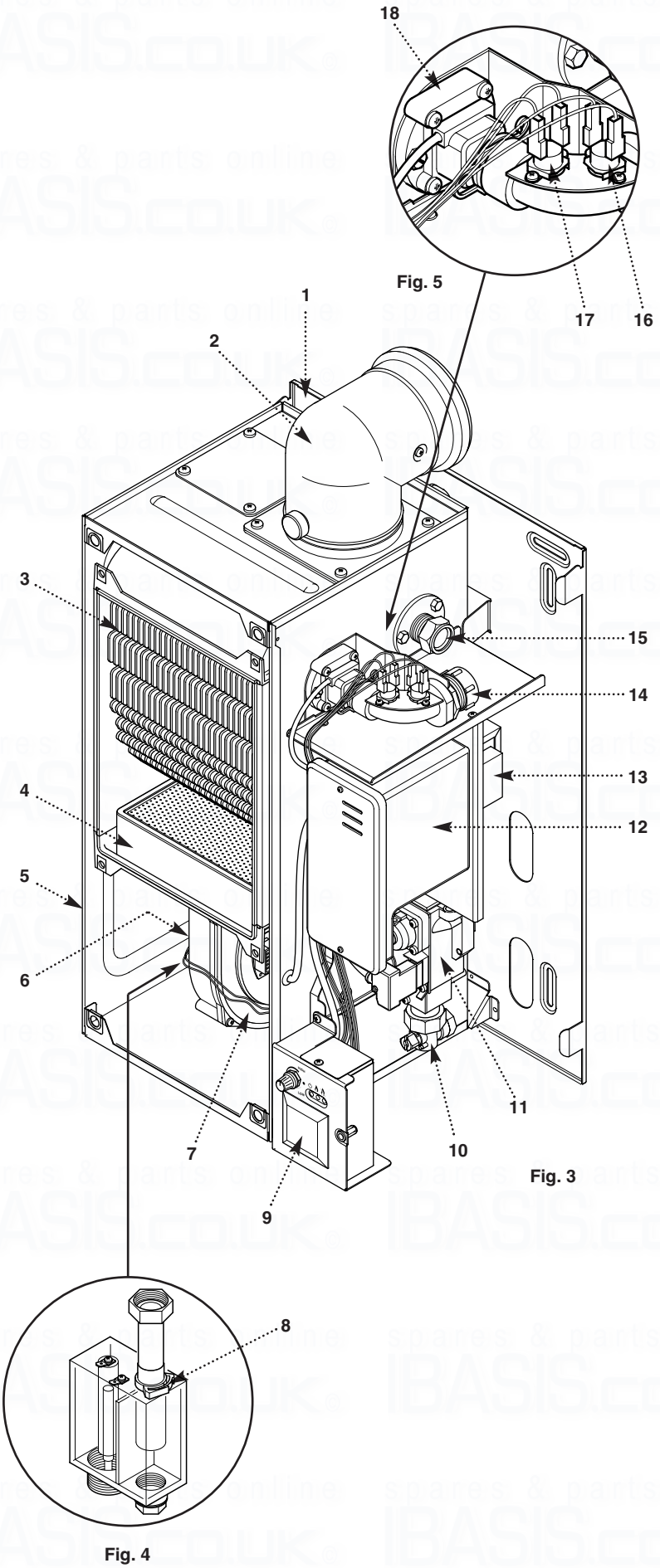

Fig. 5

Fig. 3

Fig. 4

2.0 General Layout

2.1 Layout (Figs. 3,4 & 5)

1. Wall Plate
2. Flue Elbow
3. Heat Exchanger
4. Burner
5. Air Box
6. Fan Protection Thermostat
7. Fan Assembly
8. Condensate Trap
9. User Interface (optional timer available)
10. Gas Tap
11. Gas / Air Ratio Valve
12. Electronics Housing
13. Transformer
14. Flow Pipe Connection
15. Return Pipe Connection
16. Flow Temperature Safety Thermostat - Black
17. Flow Temperature Thermistor - Red
18. Flow Switch (dry fire protection)

2.2 Optional Extras

KIT	PART N°
FLUE EXTENSION KITS (110/70)	
Flue Extension 0.25M	241692
Flue Extension 0.5M	241694
Flue Extension 1M (Use two kits for 2M etc.)	241695
Flue Bend x 2 - 45° (Reduce overall length of flue by 0.5m when fitting this bend)	241689
Flue Bend - 90° (Reduce overall length of flue by 1m when fitting each bend)	241687
VERTICAL FLUE (110/70)	
Vertical Flue Terminal	242802
Vertical Boiler Connection	242886
CONTROL ACCESSORIES	
Integral Electronic Twin Channel Timer Kit	242834

3.0 Appliance Operation

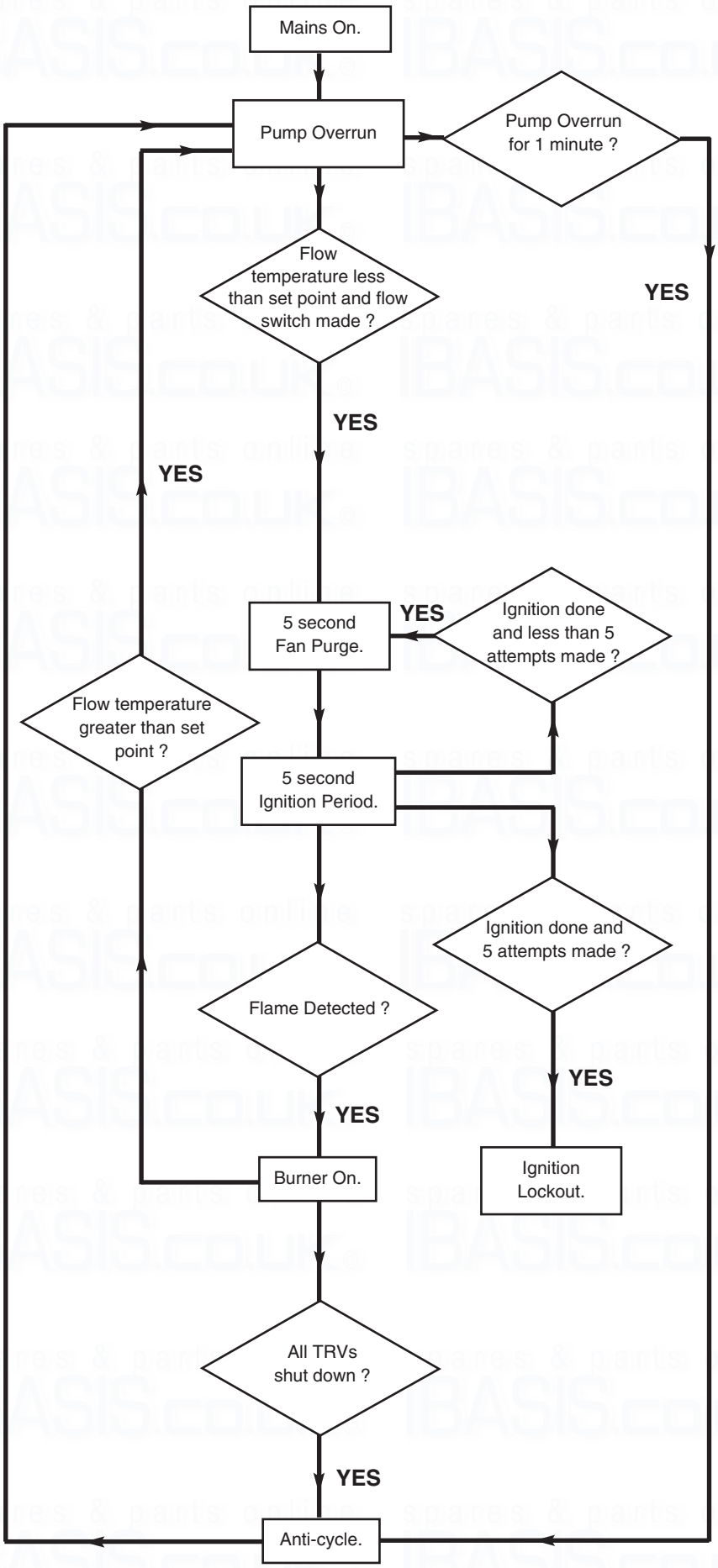

3.1

1. **Switched Live On:** When the switched live switches on pump overrun occurs.

2. **Pump Overrun:** The pump is on while the fan, spark generator and gas valve are off. If at any stage during pump overrun the flow temperature is less than the set point and the flow switch is made then fan purge occurs. After 1 minute of pump overrun anti-cycle occurs.

3. **Fan Purge:** The pump and fan are on while the spark generator and gas valve are off. After 5 seconds ignition occurs.

4. **Ignition:** The pump, fan, spark generator and gas valve are on. If a flame is detected then burner on occurs. If a flame is not detected within 5 seconds and less than 5 ignition attempts have been made then fan purge occurs. If a flame is not detected within 5 seconds and 5 ignition attempts have been made the ignition lockout occurs.

5. **Burner On:** The pump, fan and gas valve are on while the spark generator is off. Flow temperature is controlled by varying the fan speed (and thereby the gas rate) to achieve optimum operation. If the flow temperature is greater than the set point then pump overrun occurs. If the TRVs all shut down then anti-cycle occurs.

6. **Anti-cycle:** The pump, fan, spark generator and gas valve are switched off. After 3 minutes pump overrun occurs.

7. **Ignition Lockout:** The pump, fan, spark generator and gas valve are switched off. The boiler can only be reset by manually using the thermostat knob.

Appliance Type		C_{13}	C_{33}
Appliance Category	CAT I $_{2H}$		
Heat Input		Max	Min
(see note)	kW	33.76	10.2
	Btu/h	115,200	34,840

Heat Output
(Non Condensing 70° C Mean Water Temp)

	Max	Min
kW	30.18	9.14
Btu/h	102,980	31,180

Heat Output
(Condensing 40° C Mean Water Temp)

	Max	Min
kW	32.61	10.1
Btu/h	111,280	34,520

Max Gas Rate	(Natural Gas) (After 10 Mins)	
Btu/hr	102,980	75,000
m^3/h	2.95	2.31
ft^3/h	104.2	81.6

Inlet Pressure at Gas Valve (Natural Gas)
Min 18.1 mbar
Max 22.5 mbar
(see Section 10.1)

Injector (Natural Gas)
6.3mm Diameter

Nox Class	5	
Horizontal Flue Terminal Dimensions	Diameter	110mm
	Projection	150mm

Connections

Gas Supply	-	½ in BSPT
Central Heating Flow	-	28mm
Central Heating Return	-	28mm
Condensate Drain	-	1 in BSP

Outercase Dimensions

Overall Height Inc Flue Elbow	-	750mm
Casing Height	-	600mm
Casing Width	-	390mm
Casing Depth	-	320mm

Clearances
(For unventilated compartments see Section 7.5)

Both Sides	5mm Min
Above Casing	200mm Min
Below Casing	50mm Min
Front (For Servicing)	500mm Min
Front (In Operation)	5mm Min

Weights	kg	lb
Packaged Boiler Carton	40.7	89.6
Packaged Flue Kit	3.6	8.0
Weight Empty	38.2	84.1
Installation Lift Weight	31.5	69.3

Recommended System Temperature Drop

Normal	11°C	20°F
Condensing	20°C	36°F

Electrical Supply 230V~ 50Hz
(Appliance must be connected to an earthed supply)

Power Consumption 80W

External Fuse Rating 3A

Internal Fuse Rating (BS 4265)
Fuse (2) 4 AT (Control Board)
Fuse (3) 2 AT (Ignition Board)

Water Content
litres 2.6
pints 4.6

Static Head
max 30 metres (100 ft)
min 1 metre (3.25 ft)

Low Head 0.2m (8 in) min

System Detail
fully pumped open vented & sealed systems

Gas Connection
RC½ (½ in BSPT)

Controls
boiler thermostat, safety thermostat, flow switch, electronic flame sensing, temperature protection thermostat & condensate blockage sensor

NOTE: The maximum output of the boiler is factory set at 22.0kW (75,000 Btu/hr). This can be altered to 30.18kW (102,980 Btu/hr) - see section 8.8.

SEDBUK Declaration For 100 HE

The efficiency is 90.9%

This value is used in the UK Government's Standard Assessment Procedure (SAP) for energy rating of dwellings. The test data from which it has been calculated has been certified by 0086.

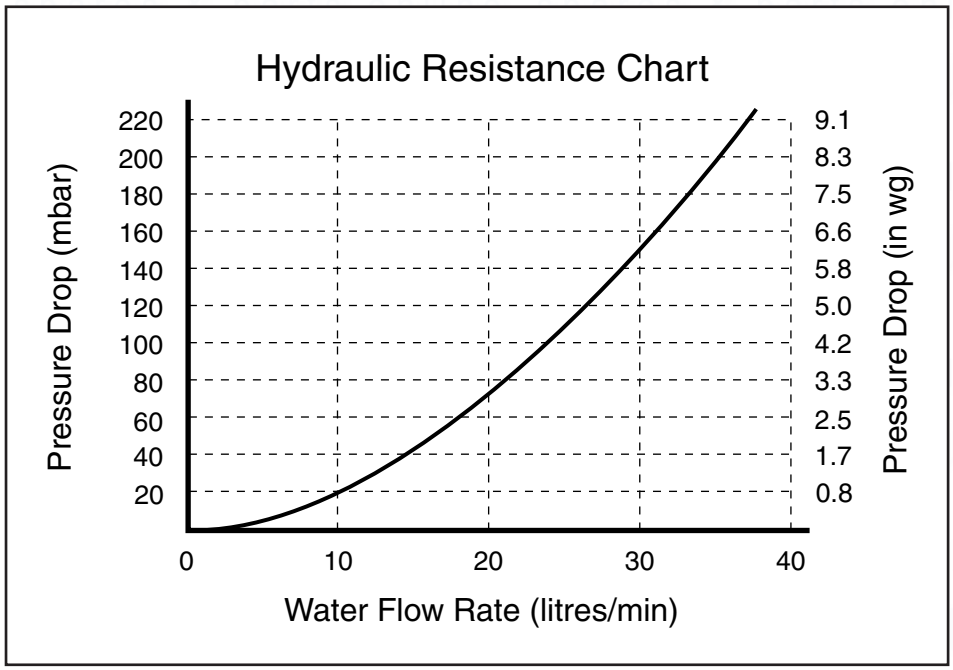

5.0 Dimensions and Fixings

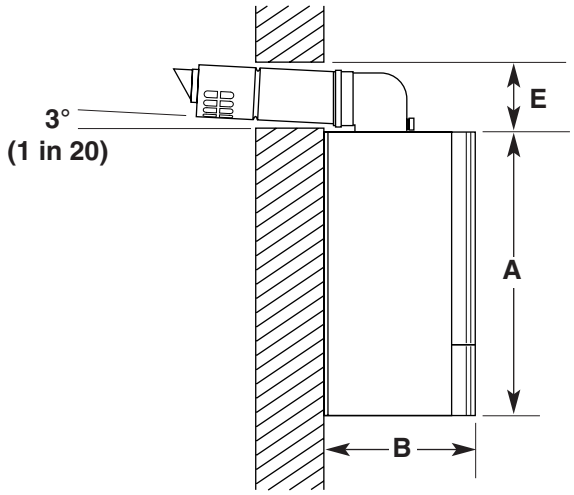

DIMENSIONS
A 600mm
B 320mm
C 390mm
D 125mm Ø Min.
E 150mm
F 125mm

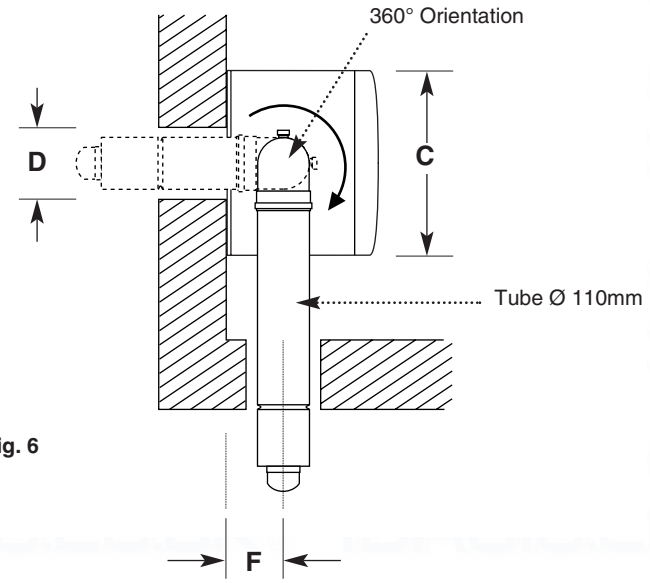

Fig. 6

The 3° (1 in 20) fall provided by the elbow is to allow condensate to run back to the boiler, for disposal through the condensate discharge pipe.

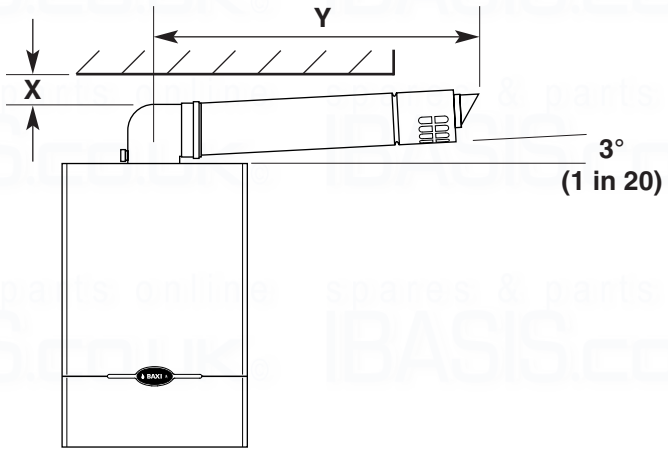

Fig. 7

SIDE FLUE (left and right)

For every 1m of horizontal flue length, the clearance above the top of the flue elbow should be 55mm to incorporate the 3° (1 in 20) fall in the flue from the terminal to the elbow.

Flue length (Y)	Clearance (X)
up to 1m	55mm
1m - 2m	110mm
2m - 3m	165mm

NOTE: This boiler does not require a bypass.
This boiler does not require a permanent live.
These diagrams only refer to pump protection for fully TRV'd systems.

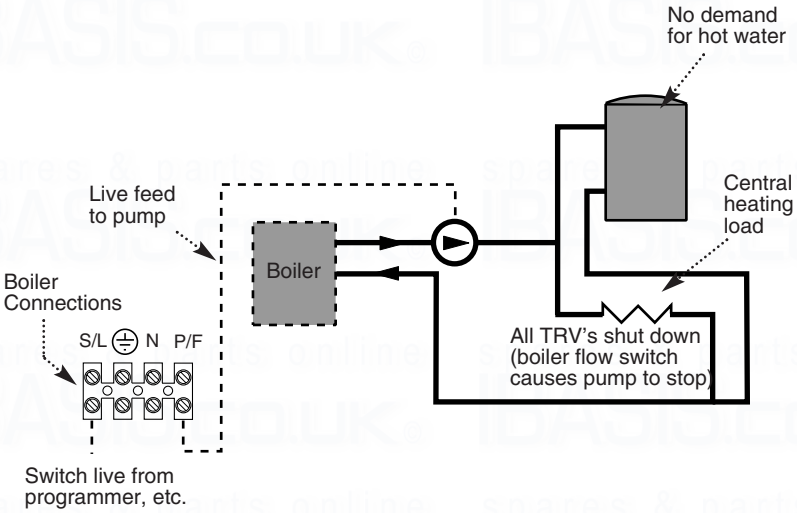

Fig. A Wiring to the pump feed connection of boiler

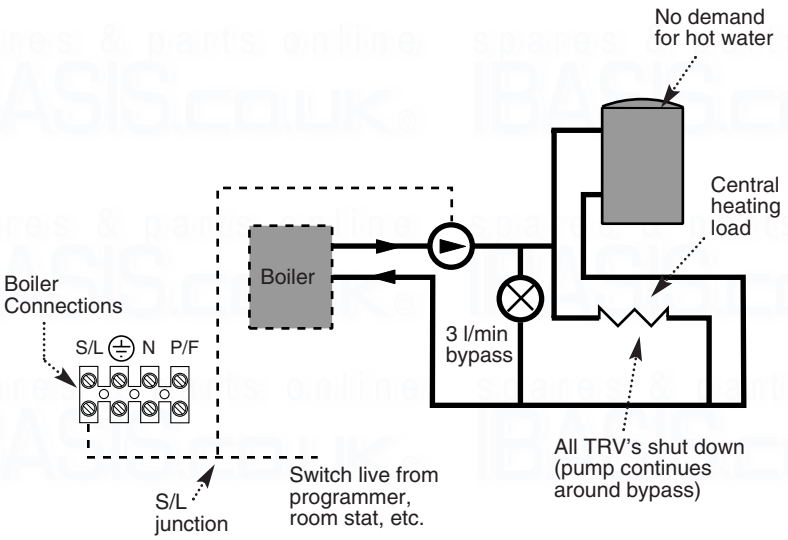

Fig. B Providing a 3 l/min bypass

6.0 System Details

6.1 Water Circulating Systems

1. The appliance is suitable for use with open vent fully pumped systems and sealed systems .

The following conditions should be observed on all systems:

- The static head must not exceed 30m (100ft) of water.
- The boiler must not be used with a direct cylinder.
- Drain cocks should be fitted to all system low points.
- All gas and water pipes and electrical wiring must be installed in a way which would not restrict the servicing of the boiler.
- Position isolating valves as close to circulating pump as possible.
- It is recommended that the return pipe is fitted with an automatic air vent as close to the boiler as is practical.

NOTE: Full TRV Systems (refer to section 6.4) Where all the radiators are controlled by TRV's then pump protection will be required. This can be done by either of the options opposite (see Fig A & B). **The option shown in Fig. A should only be used on a full TRV system without a bypass. Fig. B shows a system with a bypass that must be capable of allowing a flow of at least 3 l/min.**

6.2 Treatment of Water Circulating Systems

- All recirculatory water systems will be subject to corrosion unless an appropriate water treatment is applied. This means that the efficiency of the system will deteriorate as corrosion sludge accumulates within the system, risking damage to pump and valves, boiler noise and circulation problems.
- When upgrading existing systems that exhibit evidence of sludging, it is advisable to clean the system prior to treatment in order to remove any sludge and reduce the likelihood of these deposits damaging new components.
- When fitting new systems flux will be evident within the system, which can lead to damage of system components.
- All systems must be thoroughly drained and flushed out. The recommended flushing and cleansing agents are Betz-Dearborn Sentinel X300 or X400 and Fernox Superfloc Universal Cleanser which should be used following the flushing agent manufacturer's instructions.
- System additives - corrosion inhibitors and flushing agents/descalers should be suitable for aluminium and comply to BS7593 requirements. The only system additives recommended are Betz-Dearborn Sentinel X100 and Fernox-Copal which should be used followng the inhibitor manufacturer's instructions.

Failure to flush and add inhibitor to the system will invalidate the appliance warranty.

- It is important to check the inhibitor concentration after installation, system modification and at every service in accordance with the manufacturer's instructions. (Test kits are available from inhibitor stockists.)
- For information or advice regarding any of the above contact the Baxi Helpline.

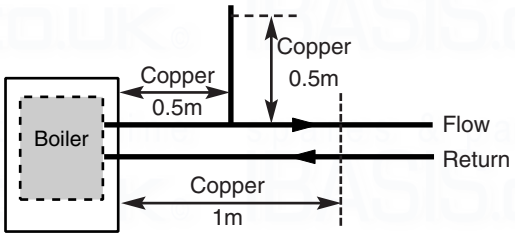

Fig. 7a

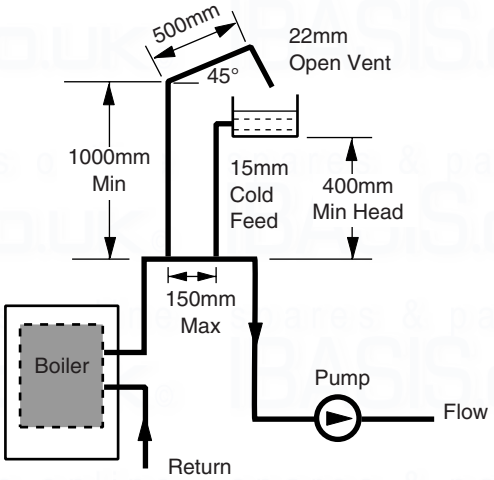

Fig. 8 **Typical Low Head Installation**

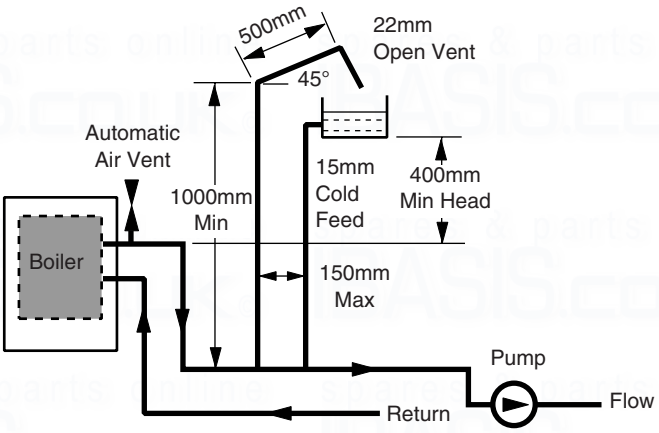

Fig. 9 **If Conditions Require, This System Possible**

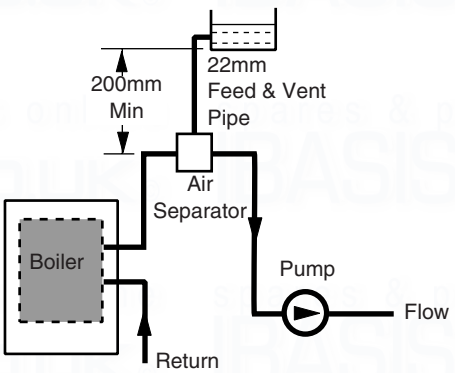

Fig. 10 **Alternative Low Head Installation**

6.0 System Details

6.3 Pipework

1. The sizes of flow and return pipes from the boiler should be determined by normal methods, according to the requirements of the system. The connection to the boiler is 28mm (compression).

2. Due to space requirements within the boiler outercase, pipework should comprise of solder fittings.

3. A 20 °C (36°F) drop in temperature across the system is recommended for condensing boilers. Existing radiators may be oversized and so allow this, but where radiator sizing is marginal it may be advisable to retain a system temperature drop of 11°C (20°F).

4. In systems using non-metallic pipework it is necessary to use copper pipe for the boiler Flow and Return. The copper must extend at least 1 metre from the boiler and include any branches (Fig. 7a).

6.4 System Controls

1. For optimum operating conditions, the heating system into which the boiler is installed should include a control system.

2. Such a system will comprise of a timer control and separate room or cylinder thermostats as appropriate. (An integral twin channel programmer is available as an optional extra).

3. The boiler should be controlled so that it operates on demand only.

4. Operation of the system under control of the boiler thermostat & TRV's only does not produce the best results.

6.5 Low Head Installation

1. Using a close couple arrangement the minimum head is as shown in the diagrams (Figs. 8 & 9) subject to the following conditions:

a) The pump being adjusted to give an 20°C drop across the boiler.
b) The pump must be fitted on the flow.
c) The pump must be fitted in accordance with the pump manufacturer's instructions.
d) The open vent pipe must be taken up from a tee in a horizontal section of the flow pipe.

An alternative Low Head Installation (Fig. 10)

2. For heads below 400mm then a combined vent and feed pipe may be connected. This must be a minimum of 22mm diameter. It is recommended that an air separator is fitted when using a combined feed and vent pipe.

6.6 Thermal Stores

1. When the 100 HE is fitted in conjunction with a thermal store, jumper 2 must be removed from the Control PCB, see Fig. 32a Section 8.8.

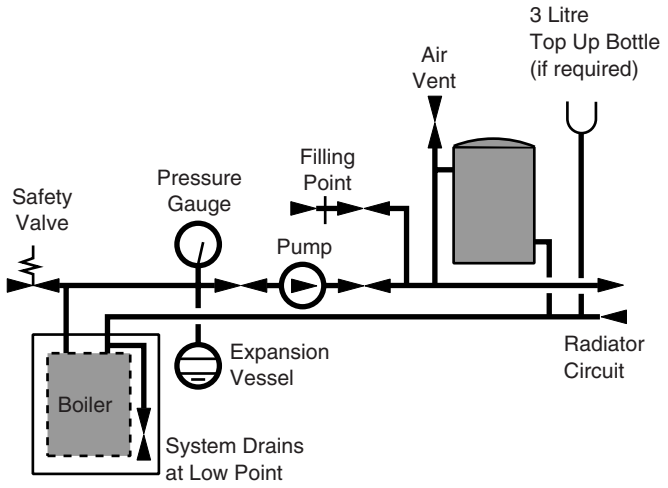

Max Boiler Flow Temp = 82° C

Fig. 11

Method of determining minimum valve of expansion vessel volume for sealed systems using Baxi Boilers

Vessel Charge Pressure (Bar)	Initial System Pressure (Bar)	Multiply Total Water Content Of System By (Litres)
0.5	0.5	0.067
	1.0	0.112
	1.5	0.207
	2.0	0.441
1.0	1.0	0.087
	1.5	0.152
	2.0	0.330
1.5	1.5	0.125
	2.0	0.265

Table. 1

Example :- System Volume = 75 litres
Vessel Charge Pressure = 1.0 bar
Initial System Pressure = 1.5 bar
Then :- 75 x 0.152 = 11.4 litres
Expansion Vessel Volume

NOTE
Where a vessel of the calculated size is not obtainable then the next available larger size should be used.

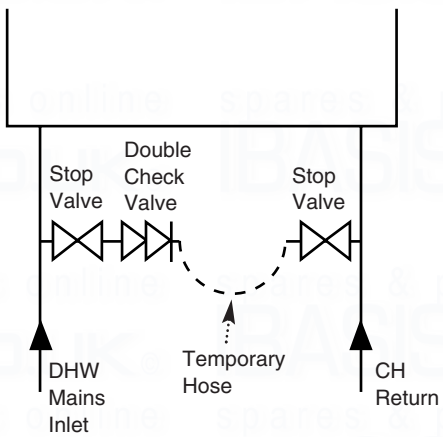

Fig. 11a

6.0 System Details

6.7 Sealed Systems (Fig. 11)

1. **SAFETY VALVE** - A safety valve complying with the requirements of BS 6750 Part 1 must be fitted close to the boiler on the flow pipe by means of a horizontal or vertically upward connection with no intervening valve or restrictions and should be positioned to facilitate testing. The valve should be pre-set and non-adjustable to operate at a pressure of 3 bar (45 lbf/in^2). It must be arranged to discharge any water or steam through a pipe to a safe outlet position.

2. **PRESSURE GAUGE** - A pressure gauge of minimum range 0-4 bar (0-60 lbf/in^2) with a fill pressure indicator must be fitted to the system, preferably at the same point as the expansion vessel in an easily visible position.

3. **EXPANSION VESSEL** - An expansion vessel complying with the requirements of BS 4814 must be fitted to the system by means of a connection close to the inlet side of the circulating pump in accordance with the manufacturers instructions, the connecting pipe being unrestricted and not less than 15mm (½ in) nominal size. The volume of the vessel should be suitable for the system water content and the nitrogen or air charge pressure should not be less than the system static head (See Table. 1).

Further details of sealed system design can be obtained from BS 5449 and the British Gas publication entitled 'Specifications for Domestic Wet Central Heating Systems'.

4. **FILLING POINT** - A filling point connection on the central heating return pipework must be provided to facilitate initial filling and pressurising and also any subsequent water loss replacement / refilling. The filling method adopted must be in accordance with the Water Supply (Water Fittings) regulations and the Water Bylaws (Scotland). Your attention is drawn to: Paragraph 24 of Schedule 2 Section 8 of the publication Water Regulations Guide which gives recommendations and guidance on approved methods for filling sealed systems. The sealed primary circuits may be filled or replenished by means of a temporary connection between the primary circuit and a supply pipe provided the arrangement in accordance with Diagram R24.2a of the Water Regulations Guide. The temporary hose must be completely removed at both ends after use.

5. **MAKE UP SYSTEM** - A method of replacing water lost from the system should be provided either by means of a make up vessel of not more than 3 litres (5 pints) capacity, mounted above the highest point of the system, or by re-pressurisation of the system.

6. **VENTING** - A method of venting the system during filling and commissioning must be provided by fitting automatic air vents or by venting manually.

7. **HOT WATER STORAGE** - The hot water storage vessel must be of the indirect coil type. All components used in the system must be suitable for operation at 110°C (230°F) and at the pressure allowed by the safety valve.

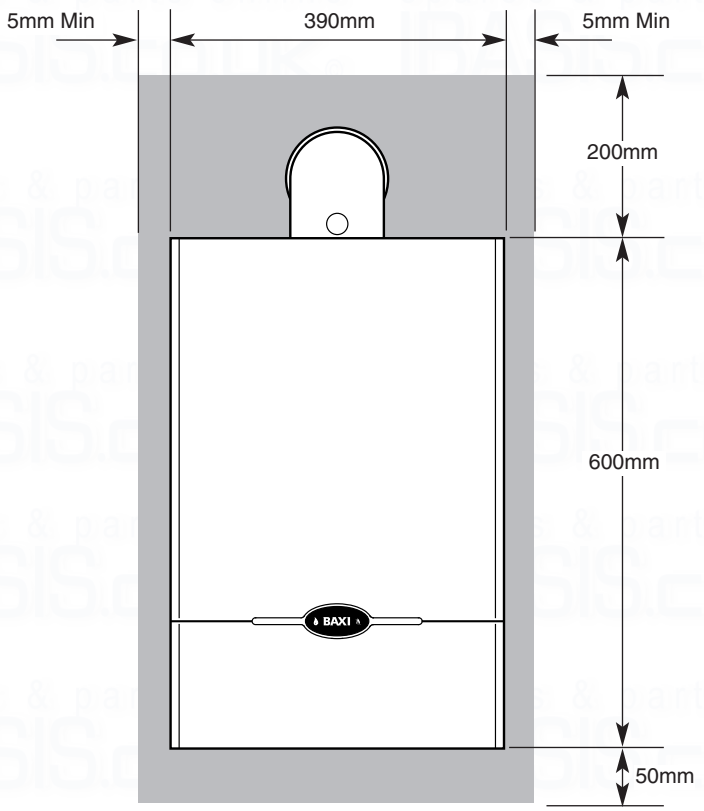

Fig. 12

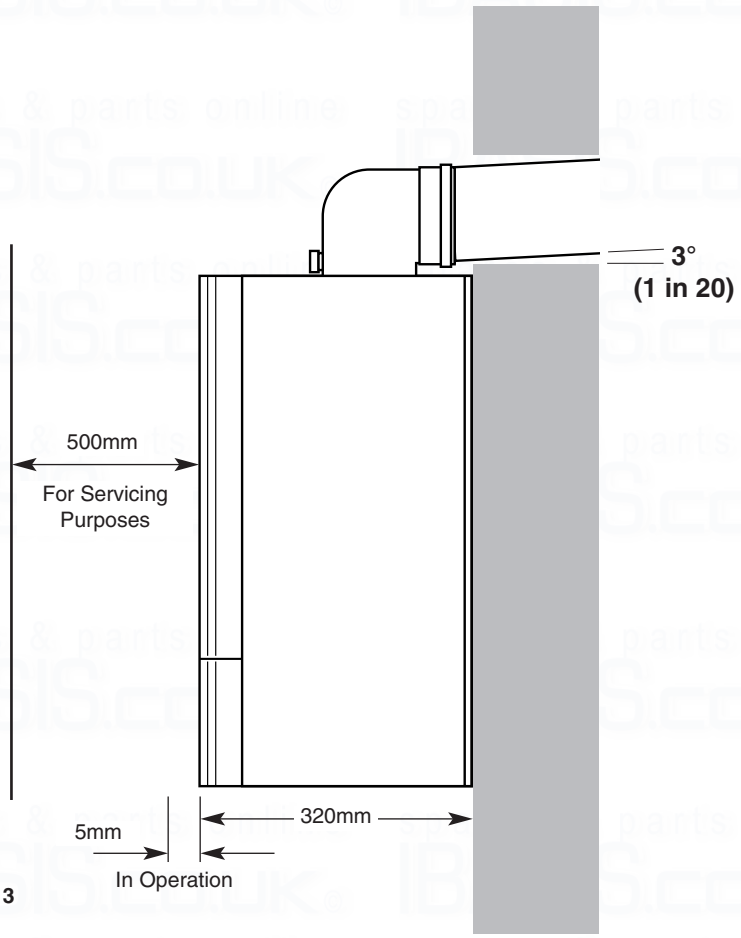

Fig. 13

7.0 Site Requirements

7.1 Information

WARNING - Check the information on the data plate is compatible with local supply conditions.

1. The installation must be carried out by a CORGI Registered Installer or other registered competent person and be in accordance with the relevant requirements of the current **Gas Safety** (Installation and Use) **Regulations**, the **Building Regulations** (Scotland)(Consolidation), the **Local Building Regulations**, the current **I.E.E. Wiring Regulations** and the bye laws of the **Local Water Undertaking**. Where no specific instruction is given reference should be made to the relevant **BRITISH STANDARD CODES OF PRACTICE**. For Ireland install in accordance with IS 813 "**Installation of Gas Appliances**". Reference should also be made to **British Gas Guidance Notes For The Installation of Domestic Gas Condensing Boilers.**

7.2 B.S. Codes of Practice

Standard	Scope
BS 6891	Gas Installation.
BS 5546	Installation of hot water supplies for domestic purposes.
BS 5449 Part 1	Forced circulation hot water systems.
BS 6798	Installation of gas fired hot water boilers.
BS 5440 Part 1	Flues.
BS 5440 Part 2	Ventilation.
BS 7074	Expansion vessels and ancillary equipment for sealed water systems.
BS 7593	Treatment of water in domestic hot water central heating systems.

WARNING - The addition of anything that may interfere with the normal operation of the appliance without the express written permission of Baxi UK Limited could invalidate the appliance warranty and infringe the **Gas Safety** (Installation and Use) **Regulations**.

7.3 Clearances (Figs. 12 &13)

1. A flat vertical area is required for the installation of the boiler.

2. These dimensions include the necessary clearances around the boiler for case removal, spanner access and air movement. Additional clearances may be required for the passage of pipes around local obstructions such as joists running parallel to the front face of the boiler.

3. For unventilated compartments see Section 7.5.

7.4 Location

1. The boiler may be fitted to any suitable wall with the flue passing through an outside wall or roof and discharging to atmosphere in a position permitting satisfactory removal of combustion products and providing an adequate air supply. The boiler should be fitted within the building unless otherwise protected by a suitable enclosure i.e. garage or outhouse. (The boiler may be fitted inside a cupboard - see Section 7.5).

2. If the boiler is sited in an unheated enclosure then it is recommended to incorporate in the system controls a suitable device for frost protection.

3. If the boiler is fitted in a room containing a bath or shower reference must be made to the current **I.E.E. Wiring Regulations** and **Building Regulations**. If the boiler is to be fitted into a building of timber frame construction then reference must be made to the Institute of Gas Engineers document UP 7.

7.0 Site Requirements

7.5 Ventilation of Compartments

1. Where the boiler is installed in a cupboard or compartment, no air vents are required for cooling purposes providing that the minimum dimensions below are maintained.

Sides	15mm
Top	200mm
Bottom	50mm
Front	30mm

2. If the boiler is installed in a smaller cupboard or compartment it must be ventilated according to BS 5440 Part 2 and the minimum clearances given in section 4.0 “Technical Data” maintained.

3. Any compartment should be large enough to house the boiler only.

NOTE: The ventilation label on the front of the outer case **MUST NOT BE REMOVED** when the appliance is installed in a compartment or cupboard.

7.6 Gas Supply

1. The gas installation should be in accordance with BS6891.

2. The connection to the appliance is a ½in BSPT internal threaded connection located at the rear of the gas service cock (Fig. 15).

3. Ensure that the pipework from the meter to the appliance is of adequate size.
(22mm pipework must be connected to the appliance gas service cock. This should extend for at least 3 meters back towards the gas meter).
Do not use pipes of a smaller diameter than the boiler gas connection.

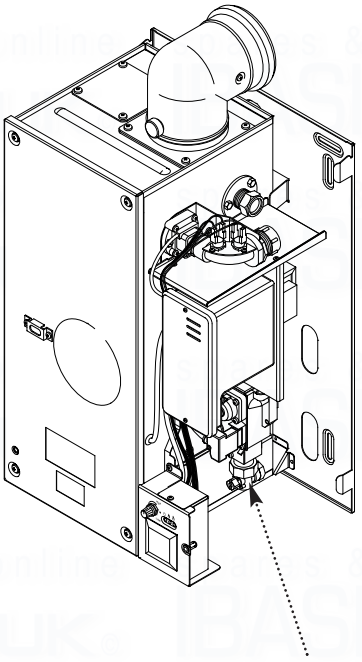

Fig. 15

7.7 Electrical Supply

1. External wiring must be correctly earthed, polarised and in accordance with current **I.E.E. Wiring Regulations**.

2. The mains supply is 230V ~ 50Hz fused at 3A.

NOTE: The method of connection to the electricity supply must facilitate complete electrical isolation of the appliance. Connection may be via a fused double-pole isolator with a contact separation of at least 3mm in all poles and servicing the boiler and system controls only.

7.8 Condensate Drain

NOTE: Ensure the discharge of condensate complies with any national or local regulations in force.

1. The condensate outlet terminates in a 1” BSP nut and seal for the connection of 21.5mm (¾in) plastic overflow pipe which should generally discharge internally into the household drainage system. If this is not possible, discharge into an outside drain is acceptable.

2. The pipe should run internally as much as possible and with a 10° (1 in 6) fall to dispose of condensate quickly to avoid freezing.

Terminal Position with Minimum Distance (Fig. 17)		(mm)
A[a]	Directly below an opening, air brick, opening windows, etc.	300
B[a]	Above an opening, air brick, opening window etc.	300
C[a]	Horizontally to an opening, air brick, opening window etc.	300
D	Below gutters, soil pipes or drain pipes.	25
E	Below eaves.	25
F	Below balconies or car port roof.	25
G	From a vertical drain pipe or soil pipe.	25
H	From an internal (i) or external (ii) corner.	(i) 25 (ii) 115
I	Above ground, roof or balcony level.	300
J	From a surface facing a terminal.	600
K	From a terminal facing a terminal (Horizontal flue).	1200
	From a terminal facing a terminal (Vertical flue).	600
L	From an opening in carport (e.g. door, window) into the dwelling.	1200
M	Vertically from a terminal on the same wall.	1500
N	Horizontally from a terminal on the same wall.	300
R	From adjacent wall to flue (vertical only).	300
S	From an adjacent opening window (vertical only).	1000

Table. 2

[a] In addition, the terminal should be no nearer than 150 mm to an opening in the building fabric formed for the purpose of accommodating a built-in element such as a window frame. See BS 5440 Pt. 1.

NOTE: The distance from a fanned draught appliance terminal installed parallel to a boundary may not be less than 300mm in accordance with the diagram below

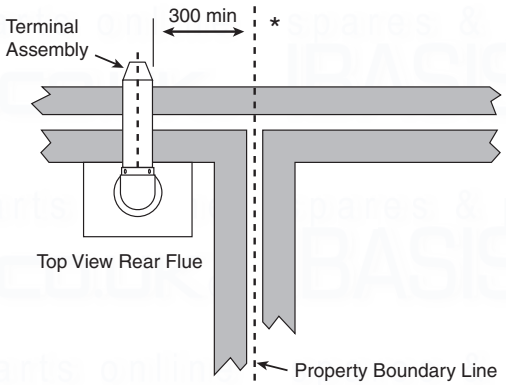

Fig. 16

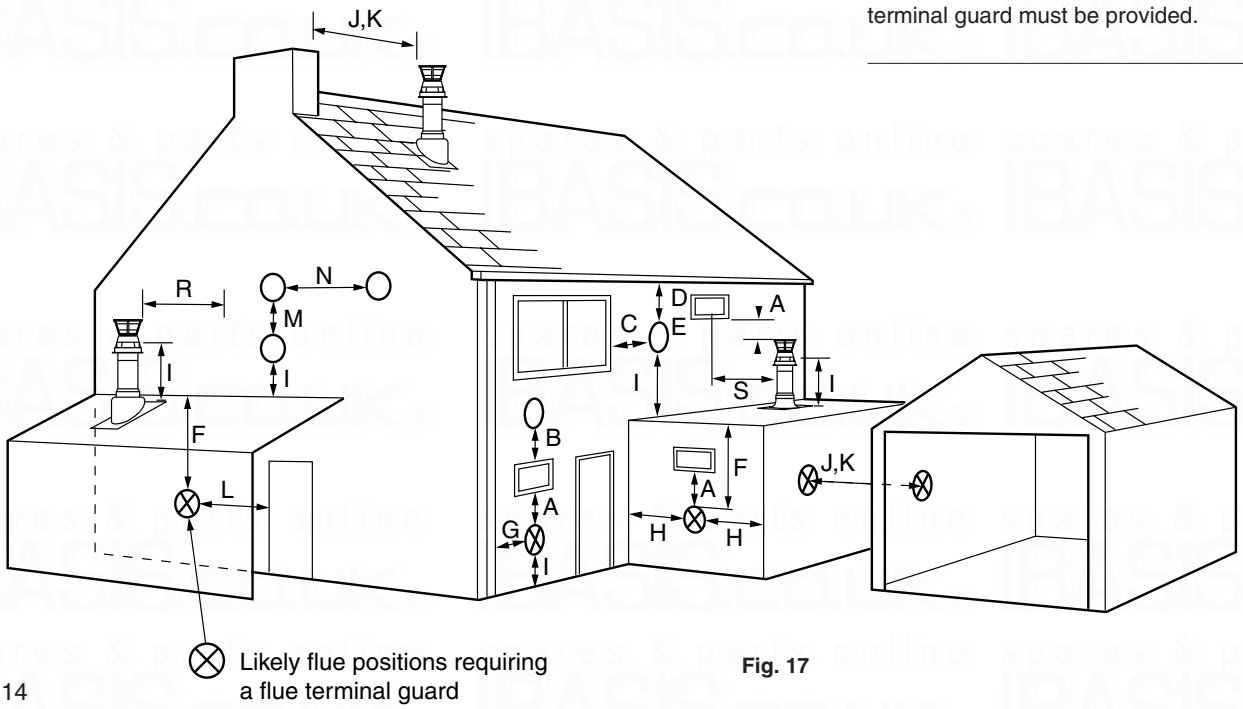

Fig. 17

7.9 Flue

NOTE: Due to the nature of the boiler a plume of water vapour will be discharged from the flue. This should be taken into account when siting the flue terminal.

1. The following guidelines indicate the general requirements for siting balanced flue terminals. Recommendations for flues are given in BS 5440 Pt.1.

2. If the terminal discharges onto a pathway or passageway, check that combustion products will not cause a nuisance and that the terminal will not obstruct the passageway.

3. Take into consideration the effect the plume of vapour may have on neighbours when siting the flue.

4. Adjacent surfaces close to the flue terminal may need protection from the effects of condensation. Alternatively a flue deflector kit (part no. 248167) is available.

5. For installation of the flue into an internal corner at the 25mm dimension the flue deflector kit (part no. 248167) must be fitted.

6. * Reduction to the boundary is possible down to 25mm but the flue deflector kit (part no. 248167) must be fitted.

7. For fitting under low sofits and eaves it is acceptable for the flue to project upto 500mm from the face of the wall to the inside of the air intake. This can be painted if required using a suitable external paint.

8. If a terminal is less than 2 metres (78¾ in) above a balcony, above ground or above a flat roof to which people have access, then a suitable terminal guard must be provided.

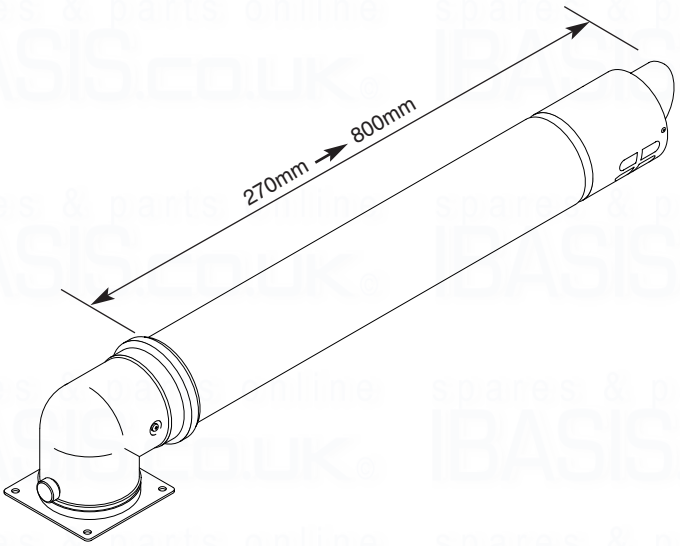

Fig. 18

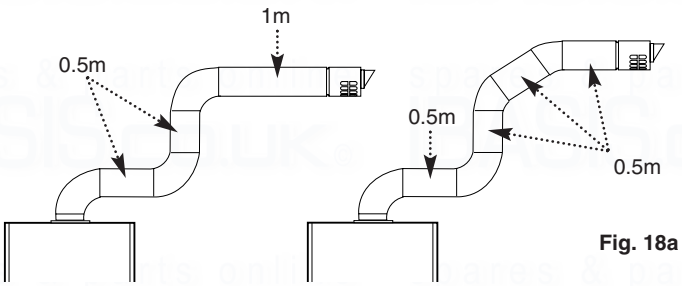

Fig. 18a

Pictorial examples of flue runs where EQUIVALENT flue length equals 4m

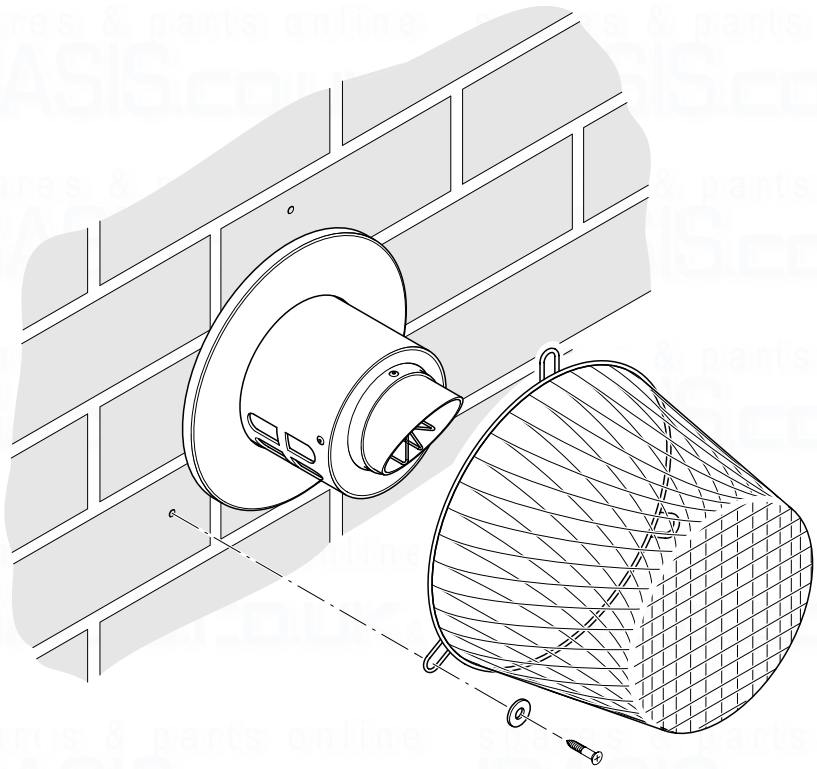

Fig. 19

7.10 Flue Dimensions

See Section 1.2. The standard horizontal flue kit allows for flue lengths between 270mm (10⁵/₈”) and 800mm (32”) from elbow to terminal (Fig. 18).

The maximum permissible equivalent flue length is: 4 metres (Fig. 18a).

NOTE: Each additional 45° of flue bend will account for an equivalent flue length of 0.5m. eg. 45° = 0.5m, 90° = 2 x 45° = 1m etc.

7.11 Terminal Guard (Fig. 19)

1. When codes of practice dictate the use of terminal guards, they can be obtained from most Plumbers’ and Builders’ Merchants.

2. When ordering a terminal guard, quote the appliance model number.

3. The flue terminal guard should be positioned centrally over the terminal and fixed as illustrated.

7.12 Vertical Flue

1. Only a flue approved with the Baxi 100 HE can be used.

2. For information on vertical flues consult the Baxi High Efficiency Brochure or Notes for Guidance supplied with the vertical flue pack.

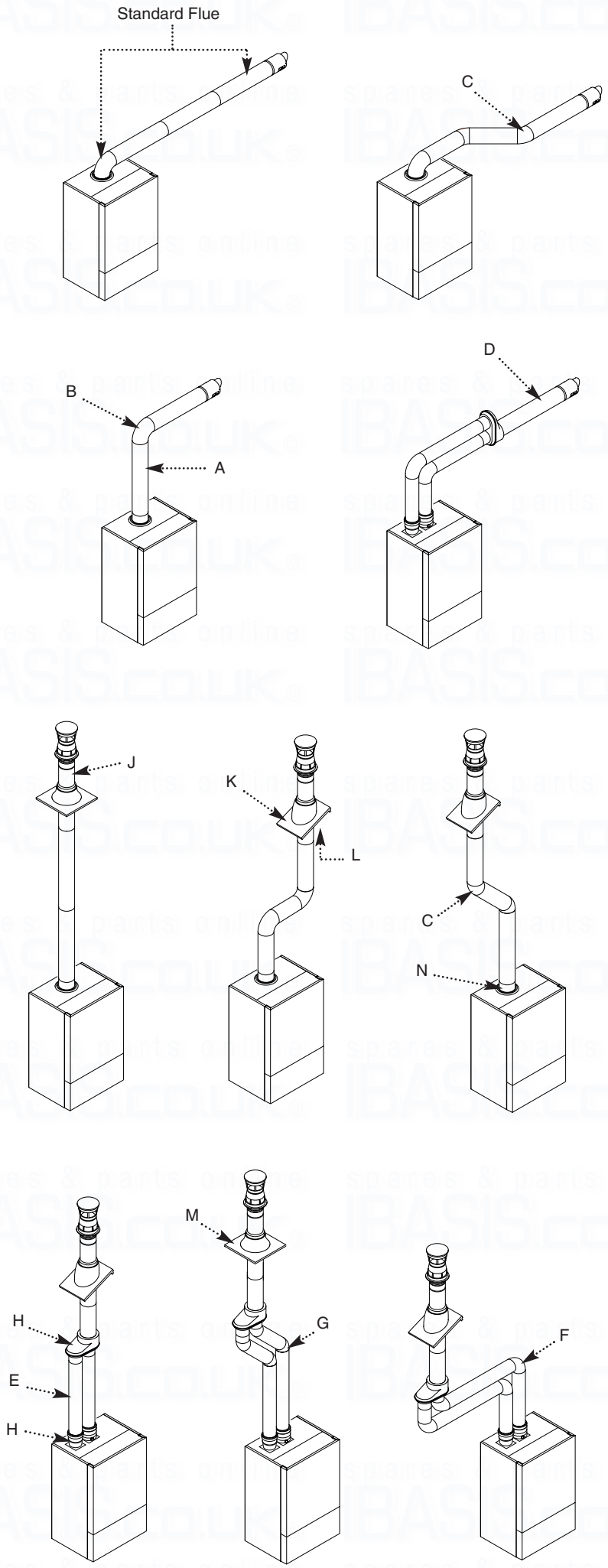

7.0 Site Requirement

7.13 Flue options

Concentric
The maximum equivalent lengths are 4m (horizontal) or (vertical). There lengths exclude the standard elbow and flue/terminal assembly (horizontal) and terminal assembly (vertical).

Twin Flue
The total maximum equivalent flue length is 150m.
NOTE: Each 1m of flue duct should be calculated as 2m.

Any additional “in line” bends in the flue system must be taken into consideration. Their equivalent lengths are:

Concentric Pipes:	45° bend	0.5 m
	93° bend	1.0 m
Twin Flue Pipe:	45° bend (air duct)	1.3 m
	45° bend (flue duct)	2.6 m
	90° bend (air duct)	4.8 m
	90° bend (flue duct)	9.6 m

Detailed examples of equivalent flue length calculation are given in the Installation Guidance Notes for each flue system type.
(Documents 243501 and 243502 for concentric and twin pipe respectively).

Key	Accessory	Size	Baxi Code Number
Concentric Flue System 110mm diameter			
A	Straight extension kit	1000mm	241695
		500mm	241694
		250mm	241692
B	Bend kit	93°	241687
C	Bend kit (pair)	45°	241689
D	Horizontal flue terminal		243013BAX
	Clamp	110mm	243014BAX
Twin Flue System 80mm diameter			
E	Straight extension kit	1000mm	238690
		500mm	238692
		250mm	238694
F	Bend kit	90°	246139
G	Bend kit (pair)	45°	246138
Universal Vertical Flue Kits			
H	Twin flue adaptor kit		242757
J	Vertical flue terminal		242802
K	Universal roof tile	25°/50°	243015
L	Roof cover plate kit		243131
M	Flat roof flashing		243016BAX
N	Boiler connection vertical concentric		242886
	Clamp	80mm	238684

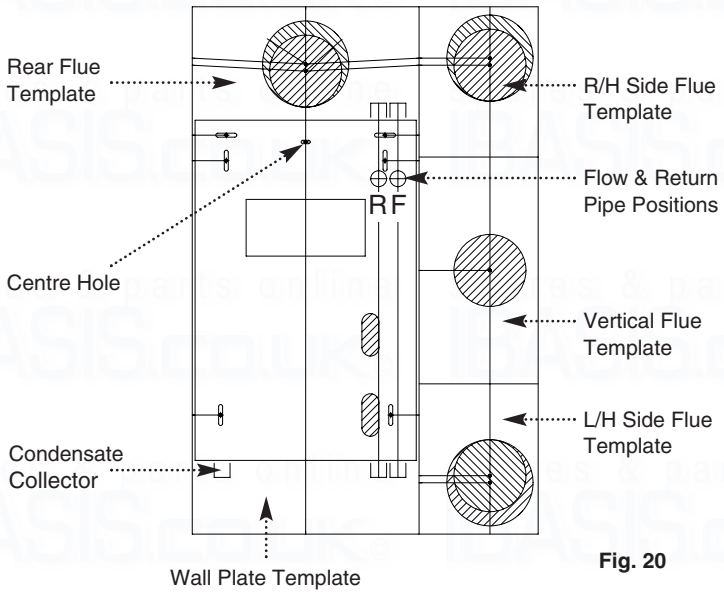

Fig. 20

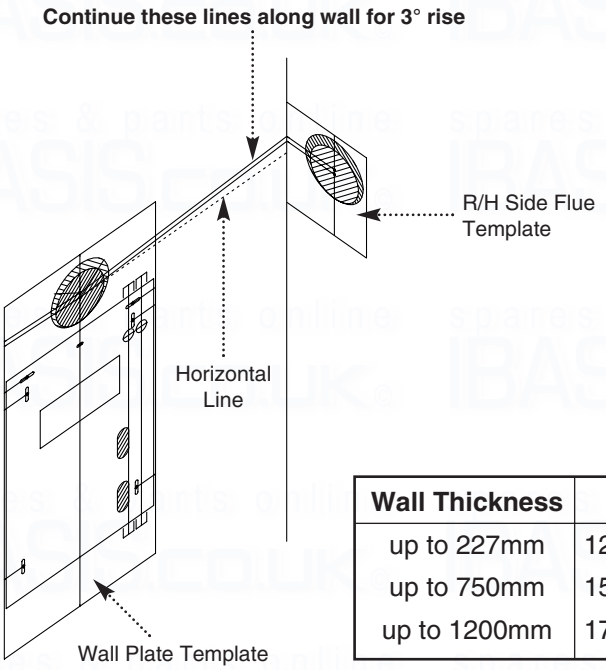

Wall Thickness	Flue Hole ø
up to 227mm	125mm core drill
up to 750mm	150mm core drill
up to 1200mm	175mm core drill

Fig. 21

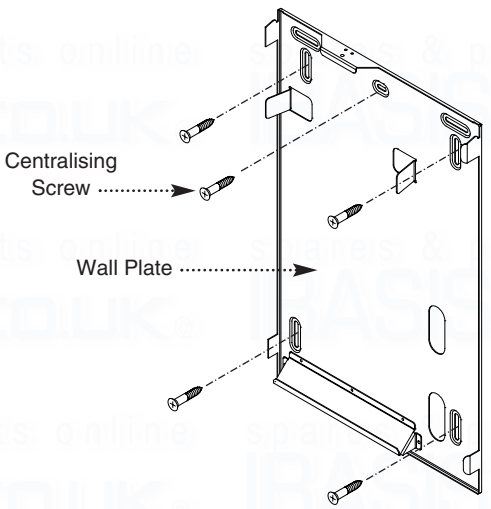

Fig. 22

8.0 Installation

Check Site Requirements (section 7) before commencing.

8.1 Initial Preparation

The gas supply, gas type and pressure must be checked for suitability before connection (see Section 7.6).

NOTE: If the boiler wall plate is to be pre-hung, follow both these instructions and those on the boiler pack.

1. Remove the fixing template (Fig. 20) from the carton.

2. After considering the site requirements (see Section 7.0) position the template on the wall ensuring it is level both horizontally and vertically.

3. Mark the position of the centre hole for the wall plate (Fig. 20).

4. Mark the centre of the flue hole (rear exit). For side exit, mark as shown (Fig. 21). If required, mark the position of the gas and water pipes. Remove the template.

5. Cut the hole for the flue (minimum diameter 125mm, see table for wall thicknesses and flue diameters).

6. Drill and plug the wall as previously marked. Secure the wall plate using the centre hole.

7. Ensuring the wall plate is level both horizontally and vertically, drill and plug at least 4 securing positions at the top and bottom through the wall plate. Utilising the slots available ensure the wall plate is square and secure to the wall (Fig. 22).

8. Loosely route the condensate discharge pipe to the lower left hand side of the wall plate.

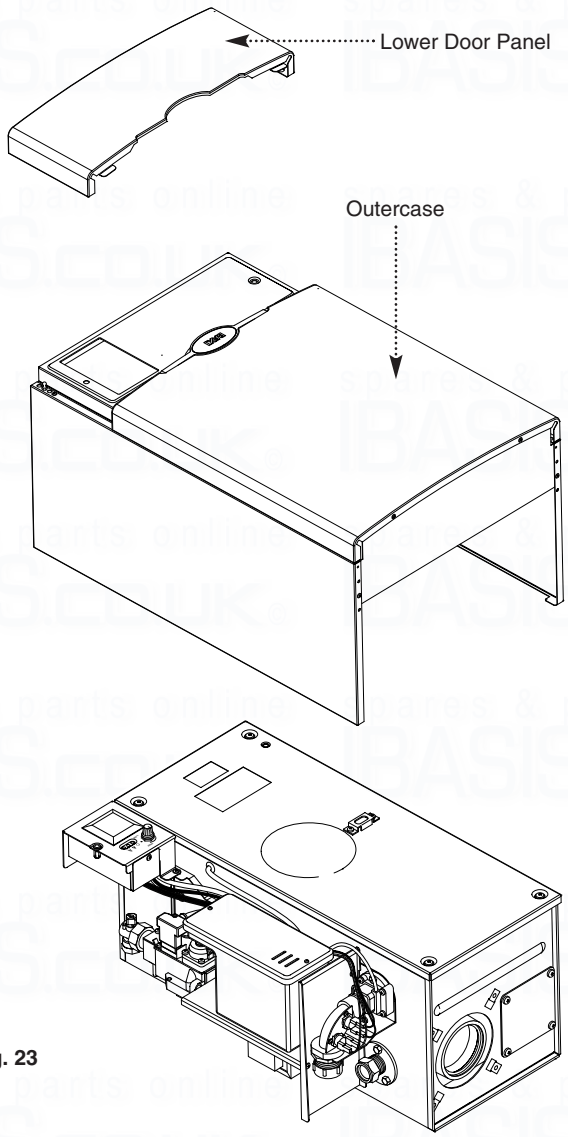

Fig. 23

8.2 Preparing The Boiler

1. Remove the outer carton.

2. Remove the internal packaging.

3. Lift the outercase upwards and remove (Fig. 23).

Baxi UK Limited declare that no substances harmful to health are contained in the appliance or used during appliance manufacture.

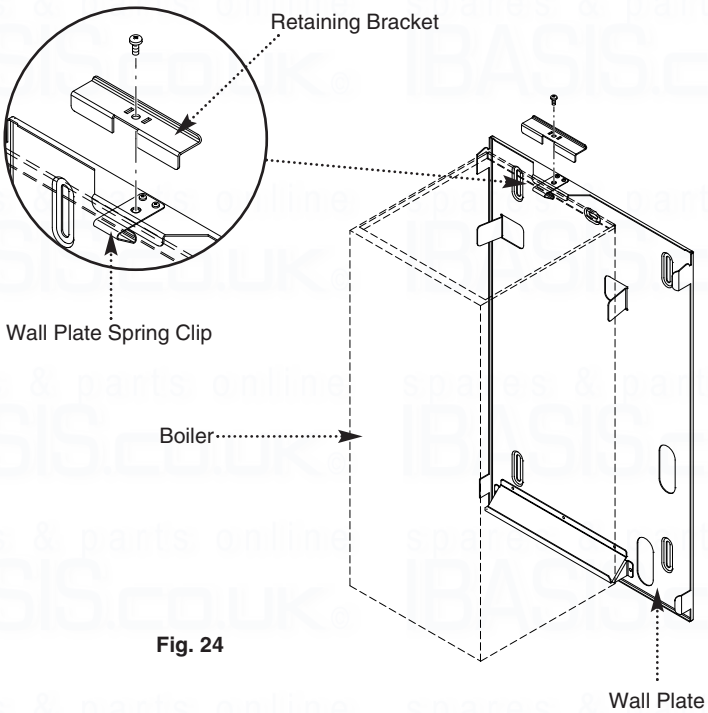

Fig. 24

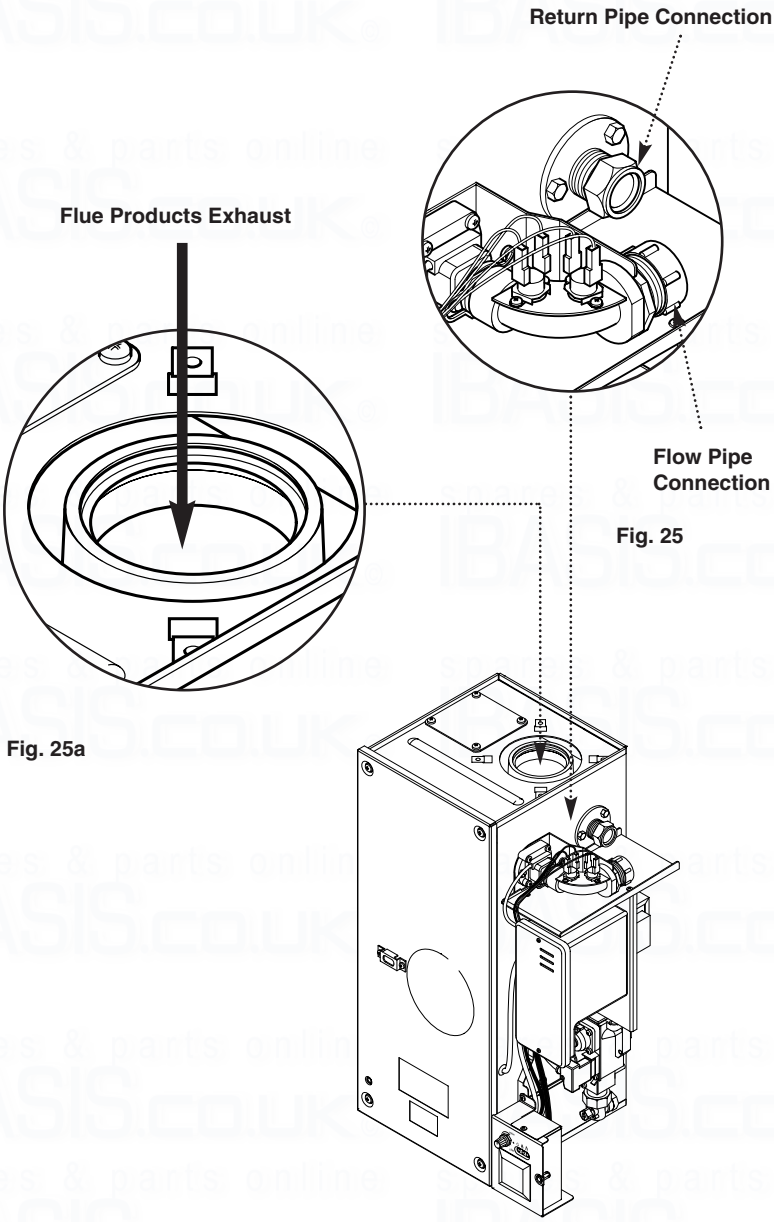

Fig. 25

Fig. 25a

8.3 Fitting The Boiler (Fig. 24)

1. Remove the screw and retaining bracket from the wall plate spring clip.

2. Offer up the boiler to the wall plate and locate the rear bottom edge onto the self locating support at the base of the wall plate.

3. Rotate the boiler and engage into temporary spring retaining latch.

4. Ensure the boiler is secured with the retaining bracket and screw previously removed, immediately.

5. Remove thread protection caps from the FLOW and RETURN connections.

8.4 Making the Water Connections (Fig. 25)

1. The boiler has two side water connections, the front connection being FLOW and the rear connection being RETURN.

2. It is essential that Flow and Return pipes are connected to the correct fittings. The flow connection incorporates the boiler thermostats and a flow switch. To avoid damage to the flow switch when tightening the flow connection the use of two spanners is recommended.

3. A copper elbow, compression nut and olive are provided in the kit for the return connection.

NOTE: Drain cocks should be fitted to all system's low points and vents to all high points.

4. Ensure that any pipework is routed so as to leave the boiler via the spaces at the rear of the outer case, either at the top or at the bottom. **Pipework within the confines of the outercase should consist of solder fittings.**

NOTE: It is important that the pipework does not interfere with the correct fitting of the outer case and a space of 14mm clearance must be left between any vertical pipes and the outer edge of the wall plate.

8.5 Making the Condensate Drain Connection

1. Connect the condensate drain using the 1"BSP nut and seal supplied. (see section 7.8.).

NOTE: To ensure the correct operation and integrity of the condensate drainage system - Carefully pour approximately 1 cupful (250ml) of water into the flue products exhaust, at the top of the heat exchanger (Fig. 25a) to ensure a seal is made in the trap.

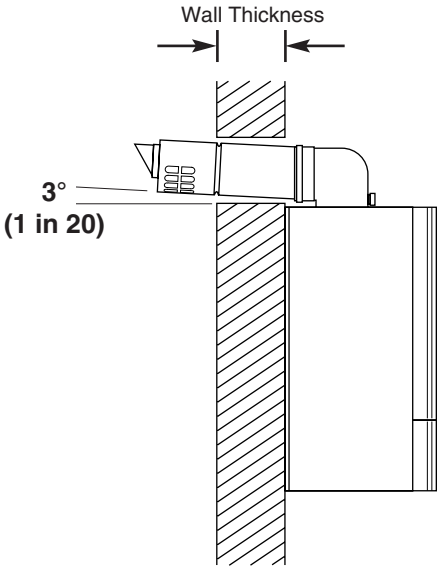

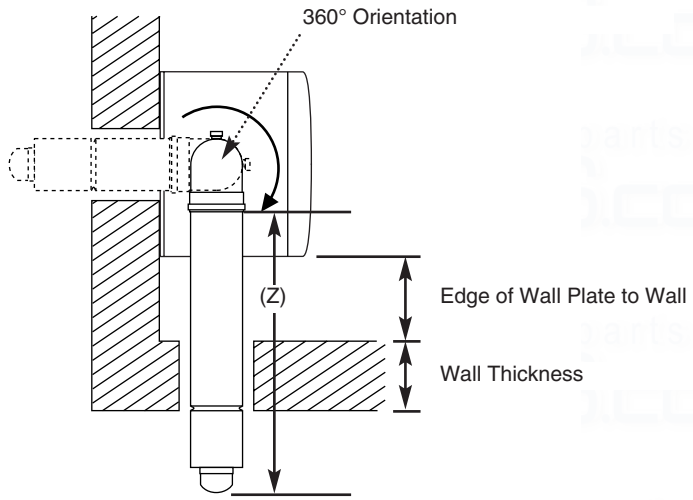

Fig. 26

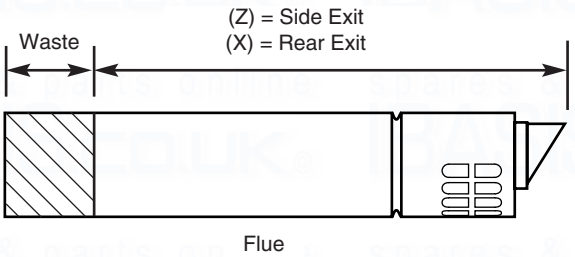

Fig. 27

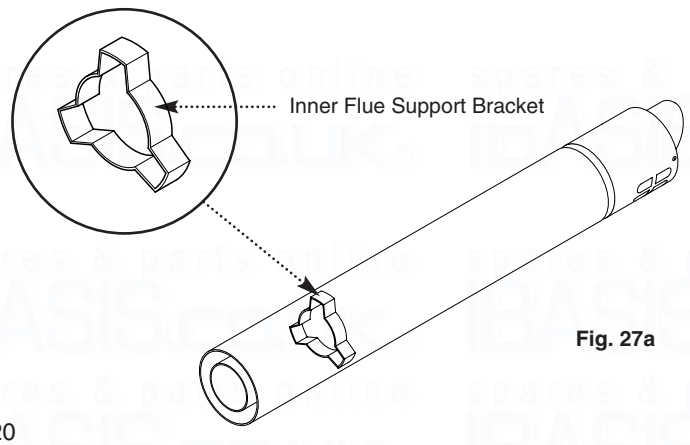

Fig. 27a

8.0 Installation

8.6 Making the Gas Connection

1. Connect the gas supply to the RC½ (½in BSPT internal) gas tap located on the lower right side of the boiler.

8.7 Fitting The Flue

Before fitting the flue, check the condensate drain integrity (see section 8.5).

IMPORTANT: The flue should always be installed with a 3° (1 in 20) fall from terminal to elbow, to allow condensate to run back to the boiler.

HORIZONTAL FLUE

1. The standard flue is suitable for lengths 270mm minimum to 800mm maximum (measured from the edge of the flue elbow outlet).

Rear Flue: maximum wall thickness - 630mm
Side Flue: maximum wall thickness - 565mm (left or right)

2. **For rear exit** - measure the wall thickness (Fig. 26) and to this dimension add 235mm. This dimension to be known as (X).
i.e.
(X) = wall thickness + 235

3. Take the flue and mark off (X) from the terminal end as indicated in the diagram (Fig. 27).

Check your dimensions.

The flue tubes are fixed together. Cut through both tubes whilst resting the flue on the semi-circular packing pieces. Deburr both tube ends.

4. **For side exit** - measure the distance from the edge of the wall plate to the inner face of the wall (Fig. 26) and to this dimension add the wall thickness + 275mm. This dimension to be known as (Z).
i.e.
(Z) = wall plate to wall + wall thickness + 275

5. Take the flue and mark off (Z) from the terminal end as indicated (Fig. 27).

Check your dimensions.

The flue tubes are fixed together. Cut through both tubes whilst resting the flue on the semi-circular packing pieces. Deburr both tube ends.

IMPORTANT: Check all measurements before cutting.

NOTE: When cutting ensure the cut does not interfere with the inner flue support bracket (Fig. 27a).

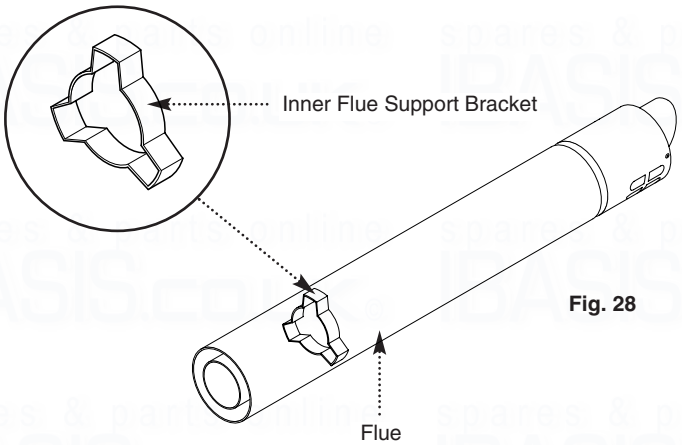

Fig. 28

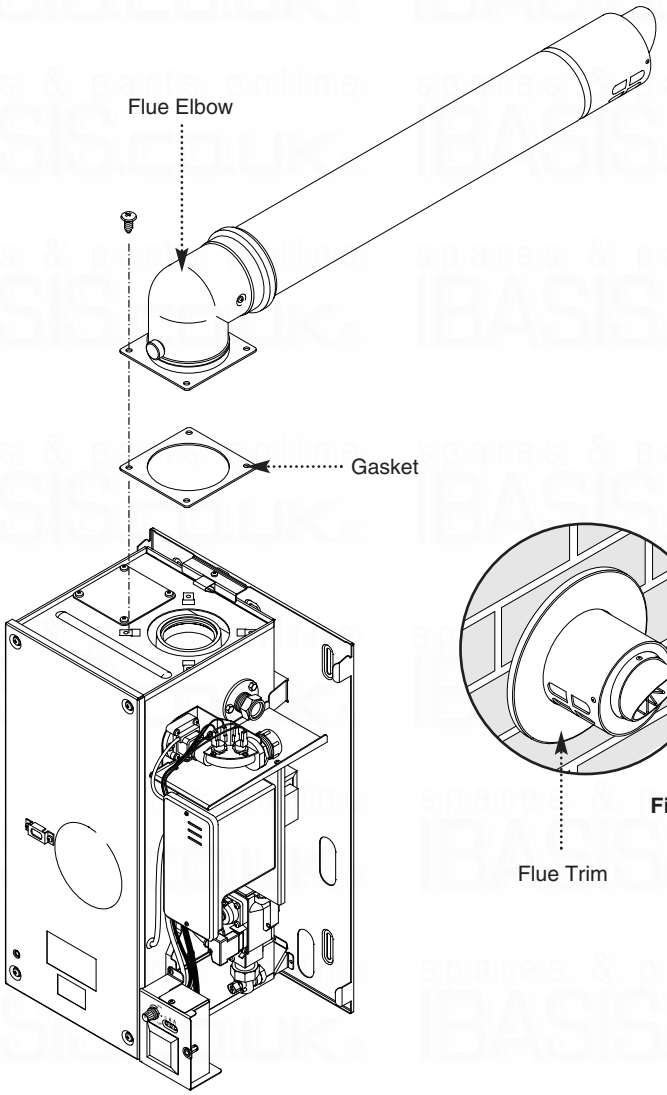

Fig. 29

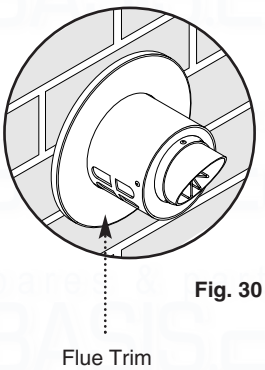

Fig. 30

8.7 Fitting the Flue (Cont)

6. Ensure the inner flue support bracket is positioned in the flue (Fig. 28).

7. Engage the flue into the flue elbow using soap solution to ease the engagement ensuring the flue is assembled as shown (Fig. 29).

8. Place the gasket over the flue exit on the boiler.

9. Slide the flue assembly through the hole in the wall.

10. Engage the elbow on to the flue connection on top of the boiler. Secure with the four screws supplied in the kit.

11. Make good between the wall and air duct outside the building ensuring the 3° drop between the terminal and elbow.

12. The flue trim should be fitted once the installation is complete and the flue secure (Fig. 30). Apply a suitable mastic to the inside of the trim and press against the wall finish, making sure the brickwork is dust free and dry.

13. If necessary fit a terminal guard (see Section 7.11).

VERTICAL FLUEING

1. Only a flue approved with the Baxi 100 HE can be used.

2. For information on vertical flues consult the Baxi High Efficiency Brochure or Notes for Guidance supplied with the vertical flue pack.

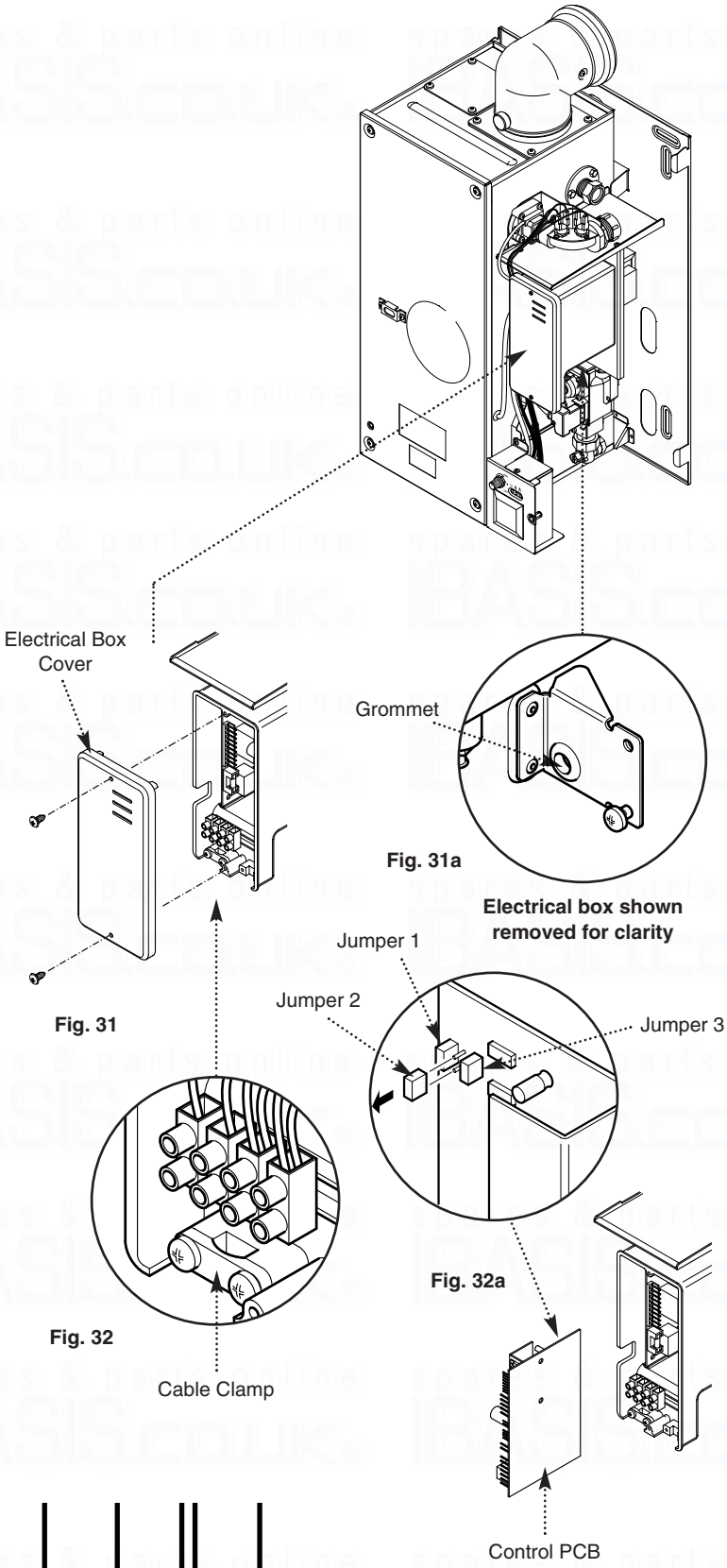

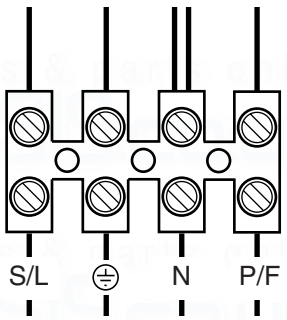

Fig. 33

8.8 Making The Electrical Connections

WARNING: This appliance must be earthed

1. The electrical connections are on the right hand side of the unit inside the electrical box.

2. Undo the two screws securing the electrical box cover and remove the cover (Fig. 31).

3. Undo the two screws securing the SL, ⏚, N, PF cable clamp and place to one side (Fig. 32).

4. If fitting an integral programmer kit please refer to kit instructions at this stage.

5. The boiler is factory set to give a maximum output of 22.0 kW (75,000 Btu/hr). The Control PCB jumper positions are as follows:

J1 In J2 In J3 In

If the installation requires a greater output to achieve the desired room temperature, this can be increased to 31.18 kW (103,000 Btu/hr) and the boiler can be adjusted as follows:

a) Draw the control PCB forwards out of the electrical box (the control PCB is the right hand board).
b) Remove all three jumpers.
c) Replace the PCB and continue with the installation.

If the boiler is to be used in conjunction with a Thermal Store, the boiler can be adjusted as follows:

a) Draw the control PCB forwards out of the electrical box (the control PCB is the right hand board).
b) Remove jumper N° 2.
c) Replace the PCB and continue with the installation.

6. Route the incoming electrical cable/s through the grommet in the support bracket. This will prevent damage to the cable (Fig. 31a).

7. Lay the cable through the cable clamp to gauge the length of cable required when it is connected to the 4-way terminal block (Fig. 32).

8. Connect the (S/L), (N) and (⏚) wires to the 4-way terminal block and refit the cable clamp (Fig. 33).

9. The pump can be wired directly to the system controls or to the P/F connector on the boiler. For full TRV installation refer to section 6.1.

10. **The P/F connection should only be used on a full TRV system without a bypass.**

11. Check the electrical installation for;
earth continuity, short circuits, resistance to earth, correct polarity and fuse failure.

12. Replace the electrical box cover and secure.

9.1 Schematic Wiring Diagram

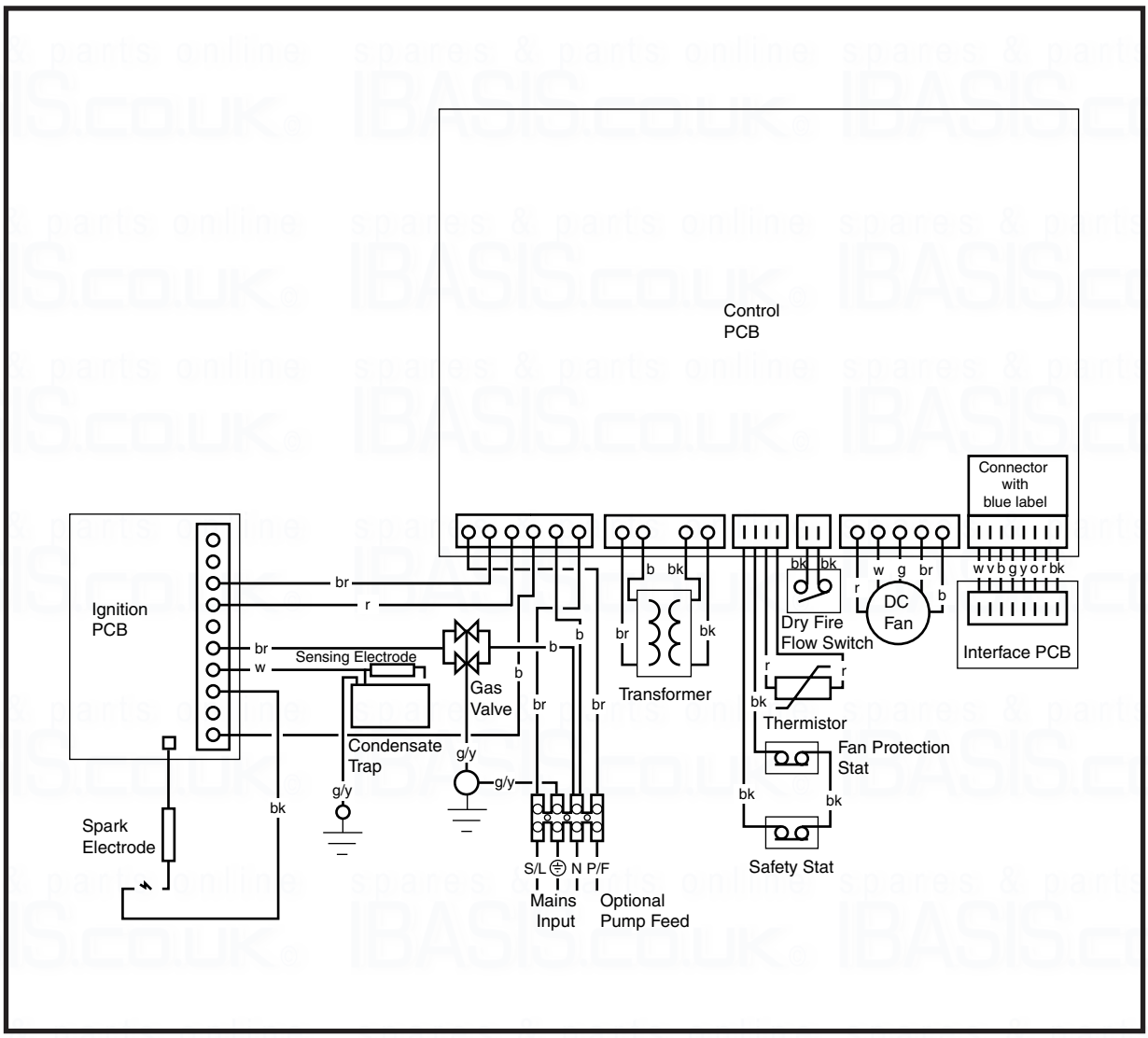

Key To Wiring Colours

b - Blue	r - Red
bk - Black	g - Green
w - White	g/y- Green/Yellow
br - Brown	y - Yellow
v - Violet	o - Orange

9.2 Illustrated Wiring Diagram

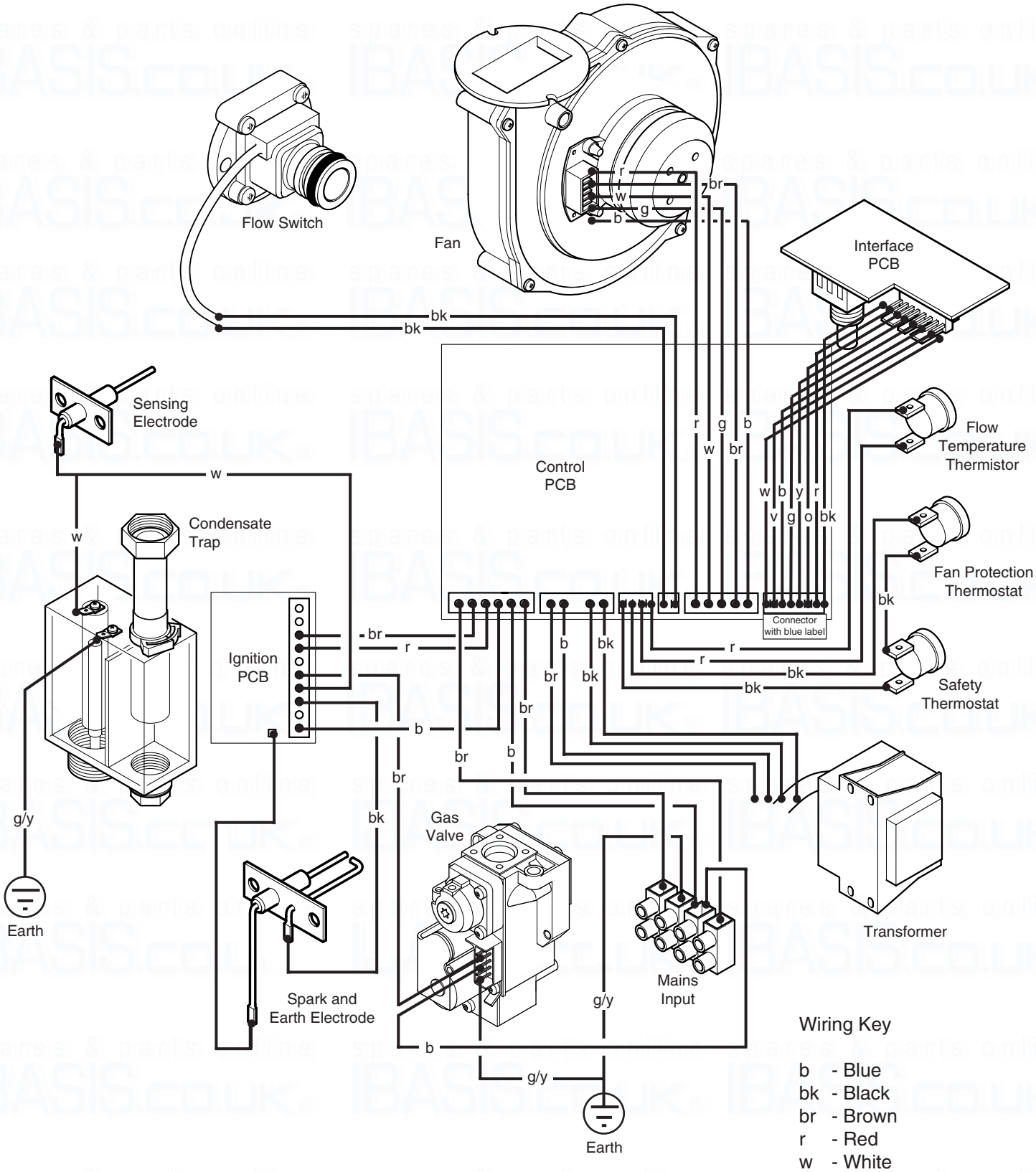

10.0 Commissioning the Boiler

10.1 Commissioning the Boiler

1. Reference should be made to BS 5449 Section 5 when commissioning the boiler.

2. Flush the whole system using a suitable flushing agent (see Section 6.2) and vent the radiators. Check for water leaks.

3. Refill the system with inhibitor following the inhibitor manufacturer's instructions and BS 7593 Code of Practice for Treatment of Water in Domestic Hot Water Central Heating Systems (see Section 6.2).

4. Turn the gas supply on and purge the system according to BS 6891.

5. Turn the gas service cock anticlockwise to the ON position and check for gas soundness up to the gas valve (Fig. 34).

6. Turn the boiler control knob fully clockwise to 'HIGH' (Fig. 35) and run the system and check the boiler for correct operation.

NOTE: The boiler is self-regulating and the gas rate will modulate between inputs of 33.76kW and 10.2kW dependent upon the system load. The input is factory set at 24.50kW and can be altered to 33.76kW - see section 8.8. **No adjustment of the gas valve is permissible.**

7. With the system cold and all controls calling for heat check the gas pressure at the inlet tapping of the gas valve (Fig. 36). The pressure must be a minimum of 18.1 mbar.

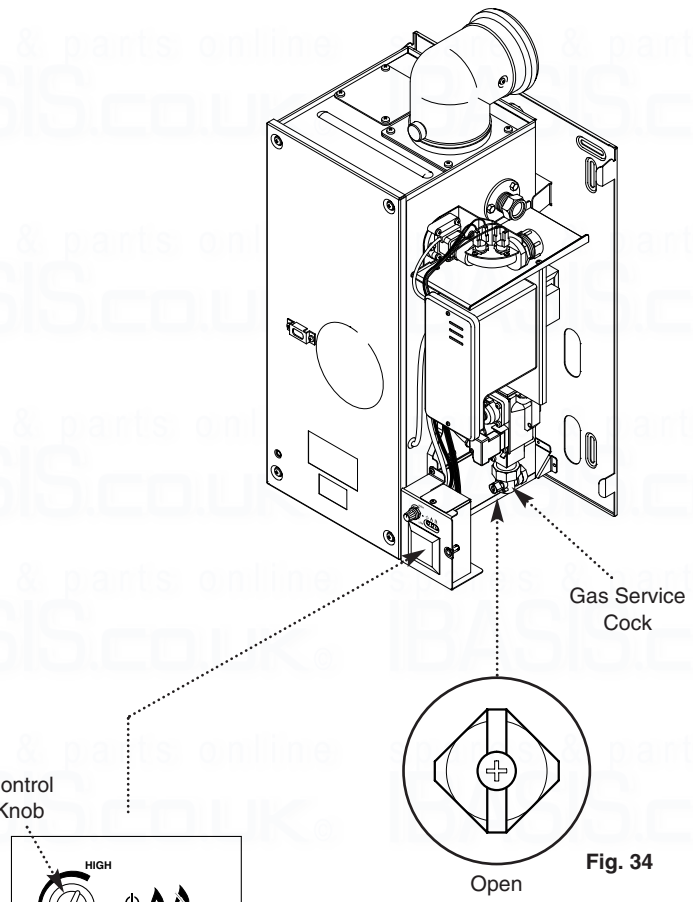

Fig. 34

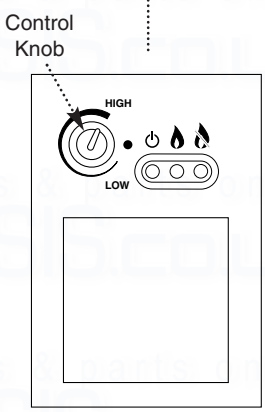

Fig. 35

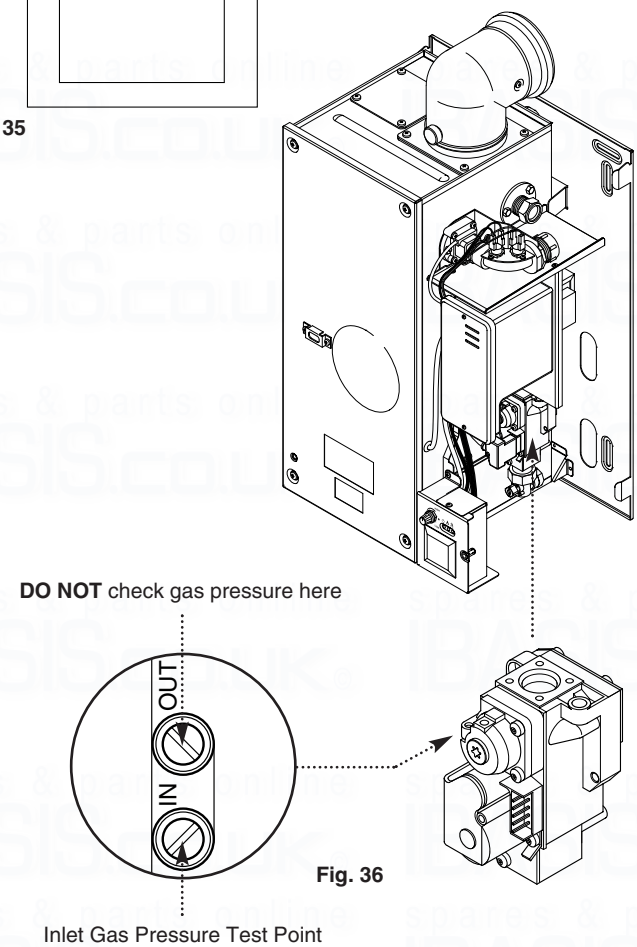

Fig. 36

11.0 Fitting the Outer Case

11.1 Fitting The Outer Case

1. Position the outercase over the boiler engaging the lugs in the side flanges over the hooks on the wall plate (Fig. 37).

2. Using the two screws supplied in the kit, secure the outercase to the combustion box (Fig. 37).

3. Replace the lower front door panel (Fig. 38).

4. The “Important Ventilation Information” label can be removed unless the appliance is installed in an unventilated compartment.

5. Carefully read and complete all sections of the “Benchmark” Installation, Commissioning and Service Record Log Book that are relevant to the appliance and installation. The details of the Log Book will be required in the event of any warranty work. The Log Book must be handed to the user for safe keeping and each subsequent regular service visit recorded.

6. Instruct the user in the operation of the boiler controls. Hand over the User’s Operating, Installation and Servicing Instructions and the Log Book, giving advice on the necessity of regular servicing.

7. Advise the user that they may observe a plume of vapour from the flue terminal, and that it is part of the normal operation of the boiler.

IMPORTANT: This boiler is fitted with an aluminium alloy heat exchanger.
It is important that the system is thoroughly flushed in accordance with BS 7593 and that one of the following inhibitors is used:

BETZ DEARBORN SENTINEL X100

FERNOX COPAL

Refer to inhibitor manufacturer’s instructions for correct use. Failure to comply with this requirement will invalidate the appliance warranty.
It is also important to check the inhibitor concentration after installation, system modification and at every service.

Date Boiler Installed	/ /
Inhibitor Used	

8. This label is located on the electrical box front cover on the boiler. Detail of system treatment should be added for future reference.

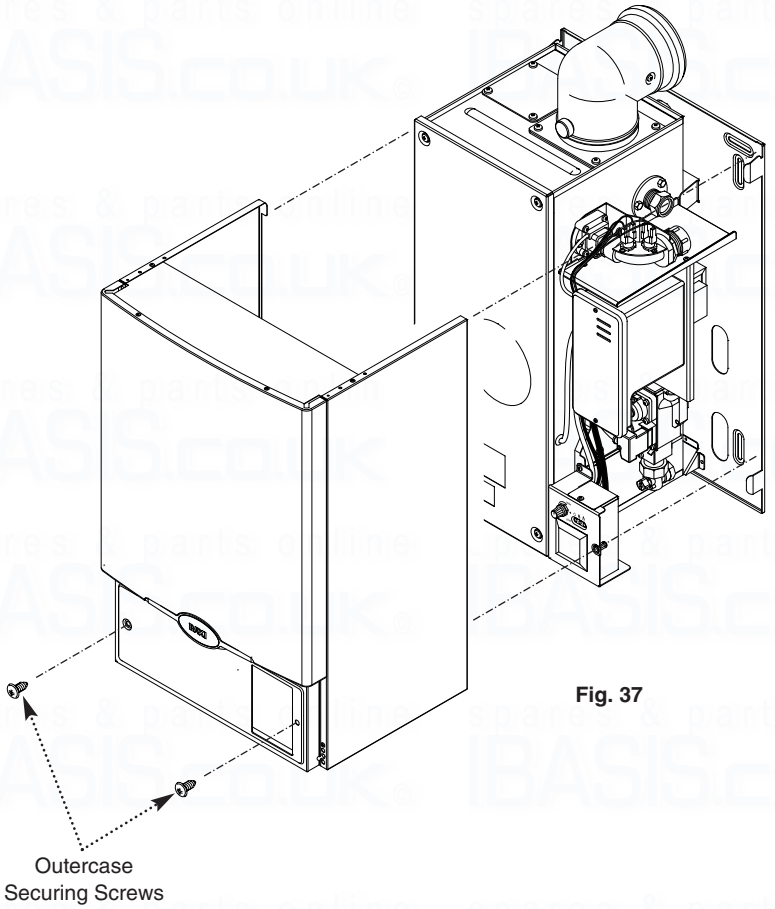

Fig. 37

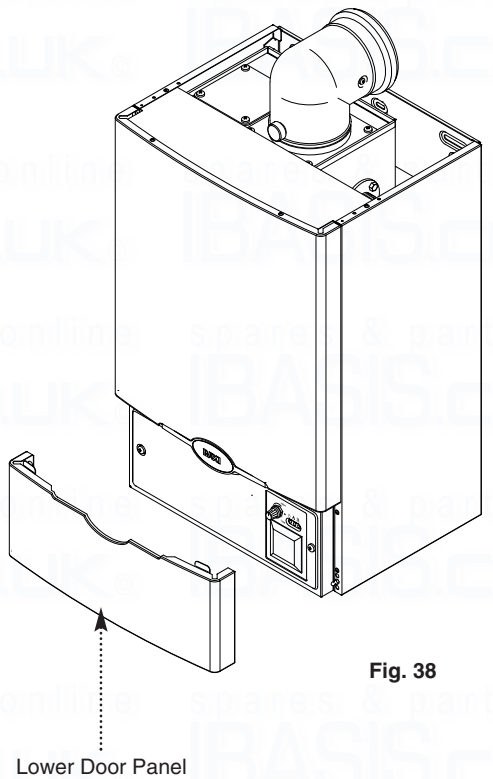

Fig. 38

12.0 Servicing the Boiler

12.1 Annual Servicing

IMPORTANT: When servicing ensure that both the gas and electrical supplies to the boiler are isolated before any work is started.

When the boiler control knob is switched off the control PCB remains live. Therefore it is important to isolate the electrical supply.

Hazardous materials are not used in the construction of Baxi products, however reasonable care during service is recommended.

When replacing the combustion box door after servicing it is essential that the retaining screws are tightened fully.

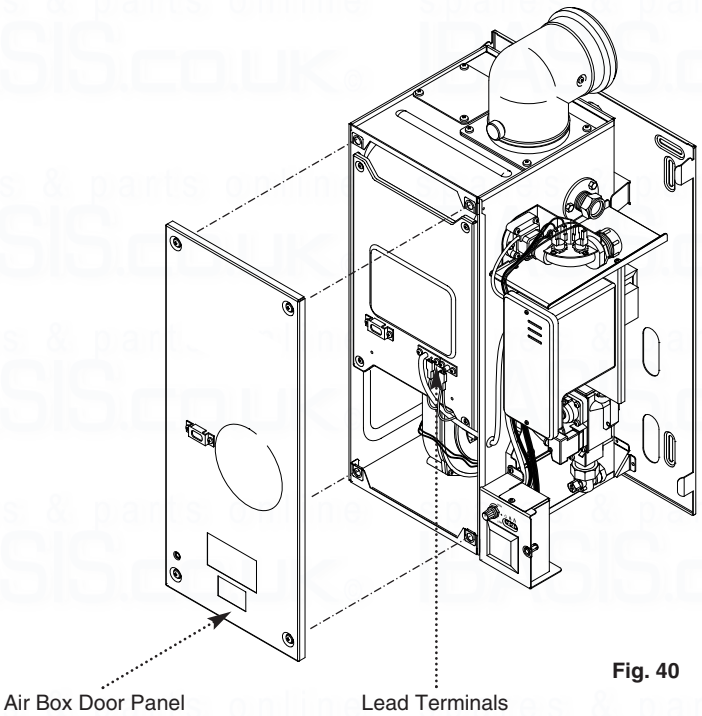

Fig. 40

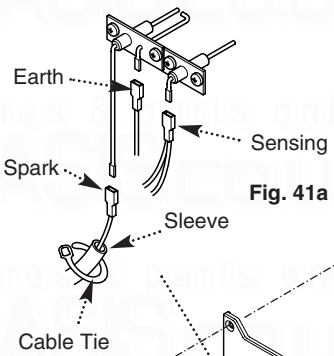

Fig. 41a

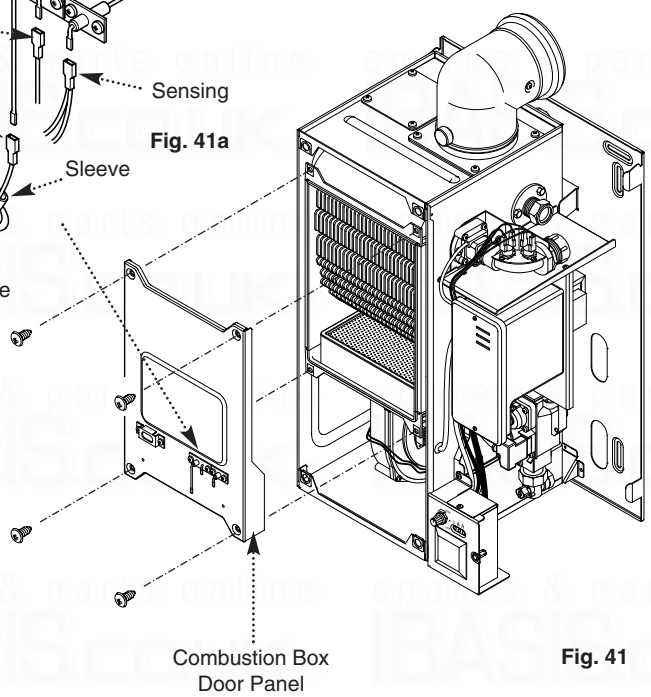

Fig. 41

1. For reasons of safety and economy, it is recommended that the boiler is serviced annually. Before servicing please read Section 1.2 Important Information.

2. After servicing, complete the relevant section of the “Benchmark” Installation, Commissioning and Service Record Log Book. This should be in the possession of the user.

3. Ensure that the boiler is cool.

4. **Ensure that both the gas and electrical supplies to the boiler are isolated.**

5. Remove the outercase and lower door panel (see Fitting the Outercase, Section 11.0).

6. Release the four 1/4 turn screws securing the air box door panel and remove the door (Fig. 40).

7. Disconnect the leads from the centre and right hand terminals (earth and flame sensing probe). The spark electrode lead is permanently fixed to the electrode. Undo the re-usable cable tie and pull down the sleeving to expose the joint in the electrode lead. Disconnect the lead (Fig. 41a).

8. Undo the four screws securing the combustion box door and remove the door (Fig. 41).

9. Visually check for debris/damage and clean or replace if necessary the following:

a) Burner **(Fragile - handle with care)**.
b) Heat exchanger fins.
c) Fan compartment (Check also for condensate leaks).
d) Insulation.
e) Door seals-**Important:** Pay particular attention to the condition of the combustion box door seals.
f) Electrodes.
g) Check condensate trap for debris. **NOTE:** If necessary remove the trap drain plug and place a vessel underneath to catch the condensate (care should be taken as this could be hot). Clean the trap and refit the drain plug.
h) Top of heat exchanger.

12.1 Annual Servicing (Cont)

NOTE: General cleaning can be undertaken using a vacuum. However debris should only be gently blown off the burner skin due to its fragile nature.

10. To clean the heat exchanger and burner proceed as follows:

a) Disconnect the electrical leads to the fan component protection sensor (Fig. 42).

b) Loosen the screw retaining the gas injector pipe at the venturi (Fig. 42).

c) Undo the two wing nuts to disconnect the fan (Fig. 42).

d) Remove the fan and disconnect the electrical supply to it (Fig. 42).

e) Remove the gas injector pipe from the gas valve (push-fit) (Fig. 42).

f) Undo the condensate trap securing nut, lock nut and the condensate drain pipe. Remove the condensate trap and disconnect the sensor leads (Fig. 43).

g) Remove the two screws securing the burner and remove the burner. Visually inspect the internal burner baffle for obstruction.

NOTE: The burner skin is fragile - handle with care. Clean and if necessary replace the burner (Fig. 44) (see note above).

h) Loosen the two screws retaining the heat exchanger support bracket and slide to the left to remove (Fig. 44).

i) Remove the four screws securing the heat exchanger/combustion box base and withdraw the base.

j) Lower the central insulation panel and check condition (Fig. 44). Replace the lower insulation pad if necessary.

k) Ensure the heat exchanger fins are clear of any obstruction.

l) Check condition of all seals. **Important:** Pay particular attention to the condition of the combustion box door seals.

m) Reassemble in reverse order.

11. Complete the relevant section of the "Benchmark" Installation, Commissioning and Service Record Log Book and hand it back to the user.

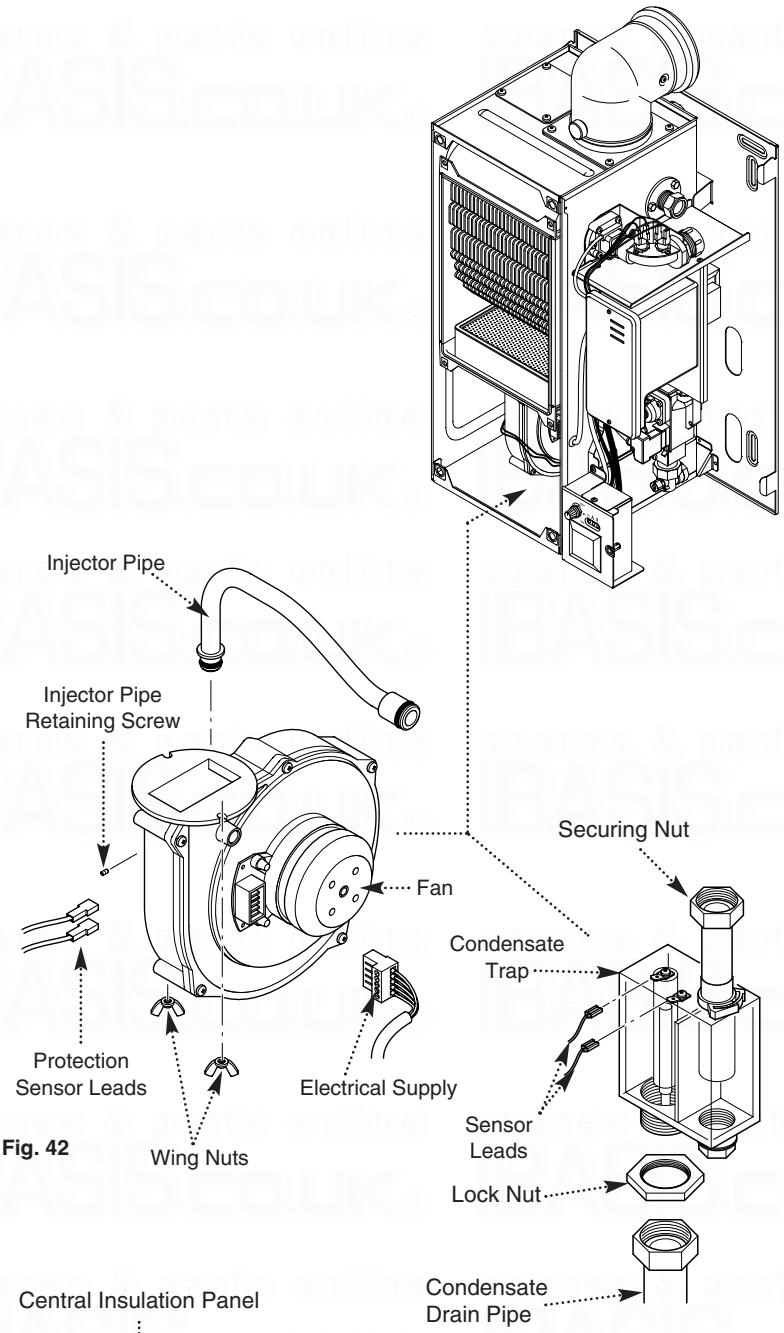

Fig. 42

Fig. 43

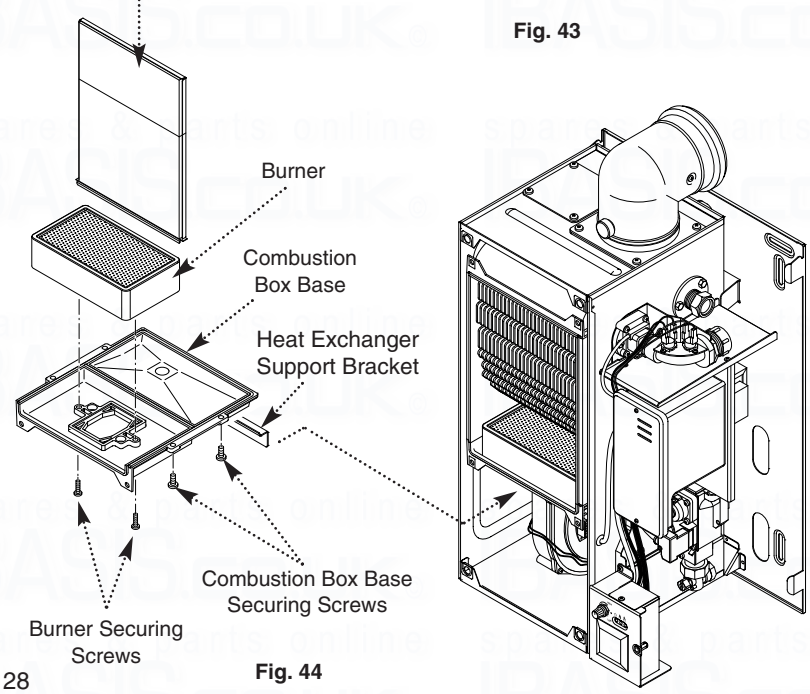

Fig. 44

13.0 Changing Components

13.1 Changing Components

IMPORTANT: When changing components ensure that both the gas and electrical supplies to the boiler are isolated before any work is started.

When the boiler control knob is switched off the control PCB remains live. Therefore it is important to isolate the electrical supply.

Hazardous materials are not used in the construction of Baxi products, however reasonable care during service is recommended.

When replacing the combustion box door after changing components, it is essential that the retaining screws are tightened fully.

1. Before changing any components please read Section 1.2 Important Information.

2. Remove the outer case and lower door panel (see “Fitting the Outercase” Section 11.0).

3. Isolate the water circuit and drain the system as necessary. A drain point is located on the heat exchanger manifold at the right hand side of the boiler (Fig. 45) to enable the heat exchanger to be drained.

4. Place a tube on the drain point to drain water away from electrics. Turn anticlockwise to open (Fig. 45).

NOTE: When reassembling always fit new ‘O’ rings, ensuring their correct location on the spigot. Green “O” rings are used for gas joints and Black “O” rings for water joints. Use Greasil 4000 (Approved Silicone Grease).

5. After changing a component re-commission the boiler where appropriate and check the inhibitor concentration (see Section 6.2 and 10.1).

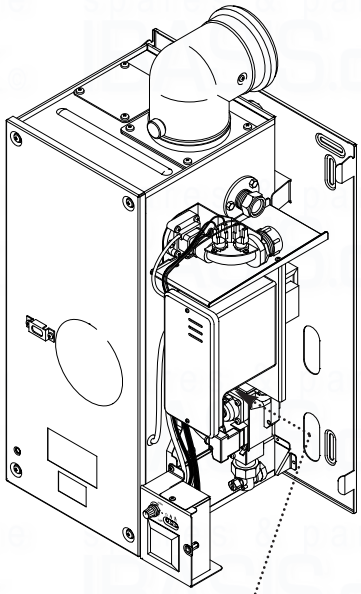

Fig. 45

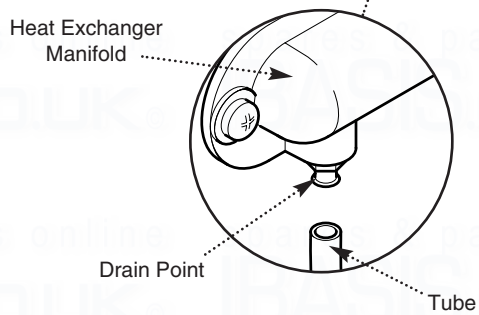

The thermistor, safety thermostat, interface PCB and the flow switch can be accessed after removal of the outer case.

13.2 Flow Temperature Thermistor and Safety Thermostat (Fig. 46).

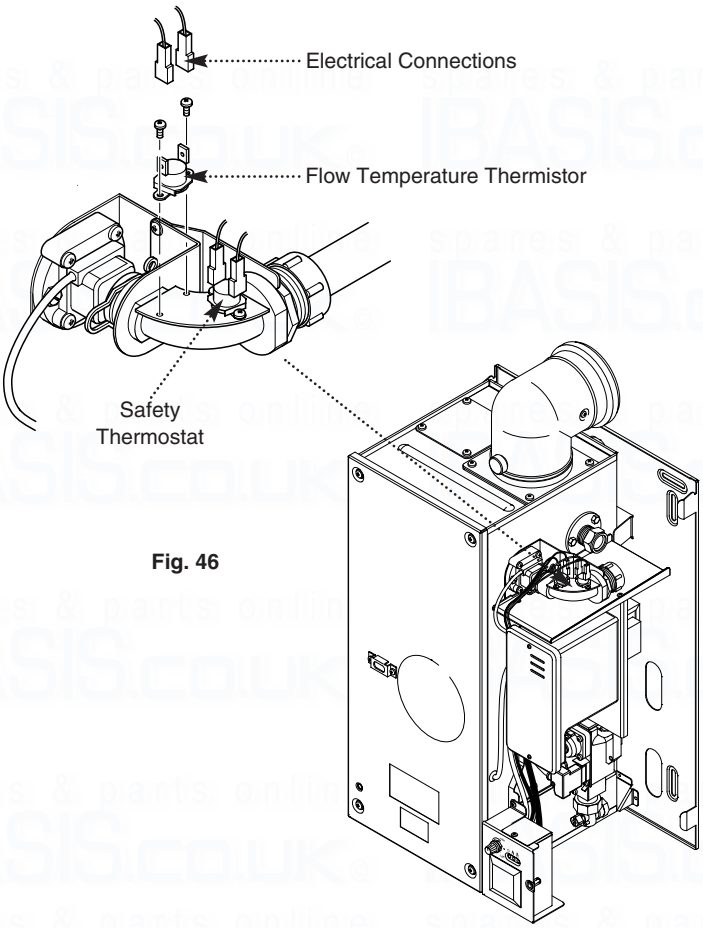

Fig. 46

1. The procedure is the same for both the thermistor and the safety thermostat.

2. Remove the electrical connections from the sensor.

3. Unscrew the sensor from the pipe.

4. Fit the new thermistor or safety thermostat and reassemble in reverse order.

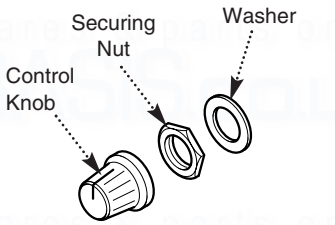

Fig. 47

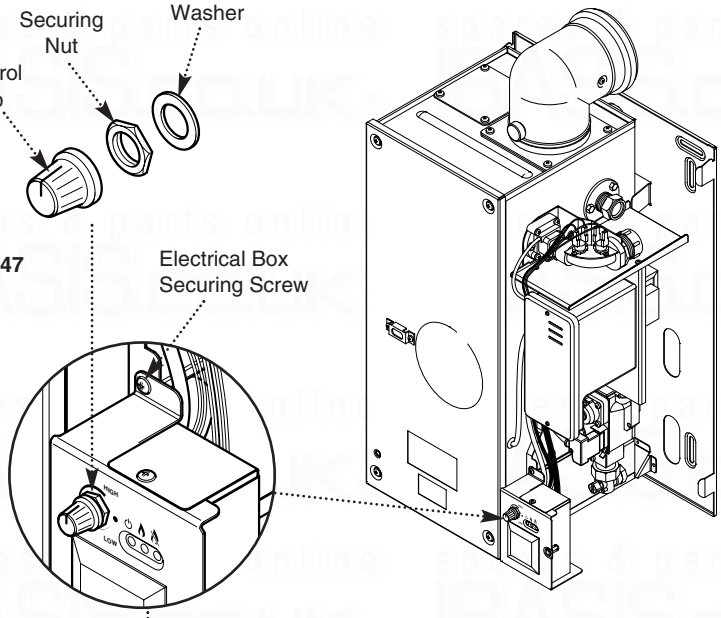

Fig. 48

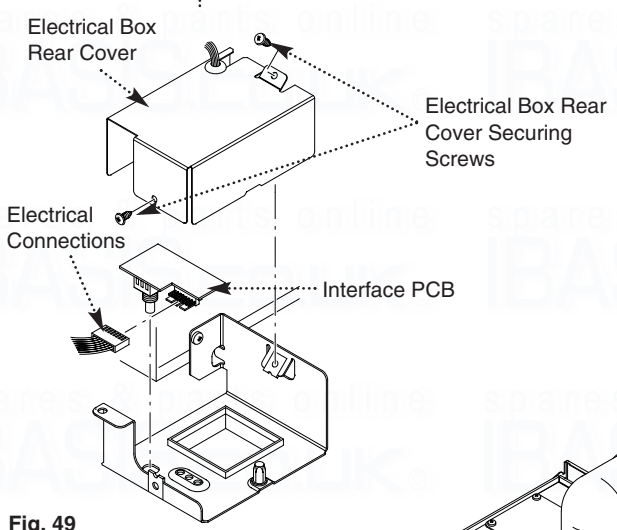

Fig. 49

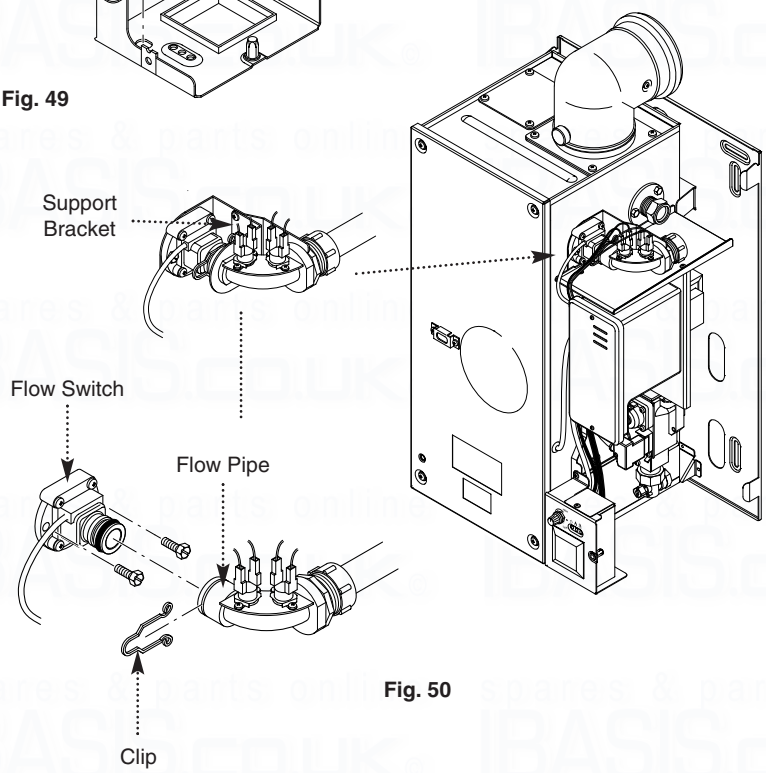

Fig. 50

13.3 Interface PCB

1. Pull the control knob off the spindle and remove the securing nut and washer (Fig. 47).

2. Release the electrical box securing screw and hinge the electrical box down (Fig. 48).

3. Remove the two rear cover securing screws and remove the rear cover (Fig. 49).

4. Lift the PCB from the electrical box and remove the electrical connections (Fig. 49).

5. Fit the new PCB and reassemble in reverse order.

13.4 Flowswitch (Fig. 50)

1. Drain the boiler
(see Section 13.1 paragraph 2 & 3).

2. Disconnect pipework, loosen elbow locking nut and undo screws on support bracket.

3. Remove the clip securing the flow pipe to the flowswitch.

4. Remove the two screws securing the flow switch to the boiler.

5. Disconnect the inline electrical connection.

6. Remove the flowswitch.

7. Fit the new flowswitch and reassemble in reverse order.

8. Recommission the boiler and check the inhibitor concentration (see Section 6.2 and 10.1).

13.0 Changing Components

The control and ignition boards can be accessed on the removal of the main electrical box cover.

1. Remove the two screws securing the main electrical box cover (Fig. 51).

13.5 Control Board (Fig. 52)

1. Slide out the control board (right hand side) and disconnect the electrical connections noting their positions.

> **NOTE:** Check the original board for the presence of input jumpers - see section 8.8. Set the new board as the original.

2. Fit the new control board and reassemble in reverse order.

13.6 Ignition Board (Fig. 53)

1. Remove the control board, (13.5) and slide out the ignition board (left hand side) and disconnect the electrical connections noting their positions.

2. Fit the new ignition board and reassemble in reverse order.

13.7 Transformer (Fig. 54)

1. After the removal of the control and ignition boards the transformer can be accessed. Loosen the two electrical box mounting plate securing screws, remove the front drip tray securing screw and lift the assembly to clear the keyhole slots.

2. The transformer is mounted on the rear of the electrical box mounting plate.

3. Remove the two transformer mounting screws and remove the transformer.

4. Fit the new transformer and reassemble in reverse order.

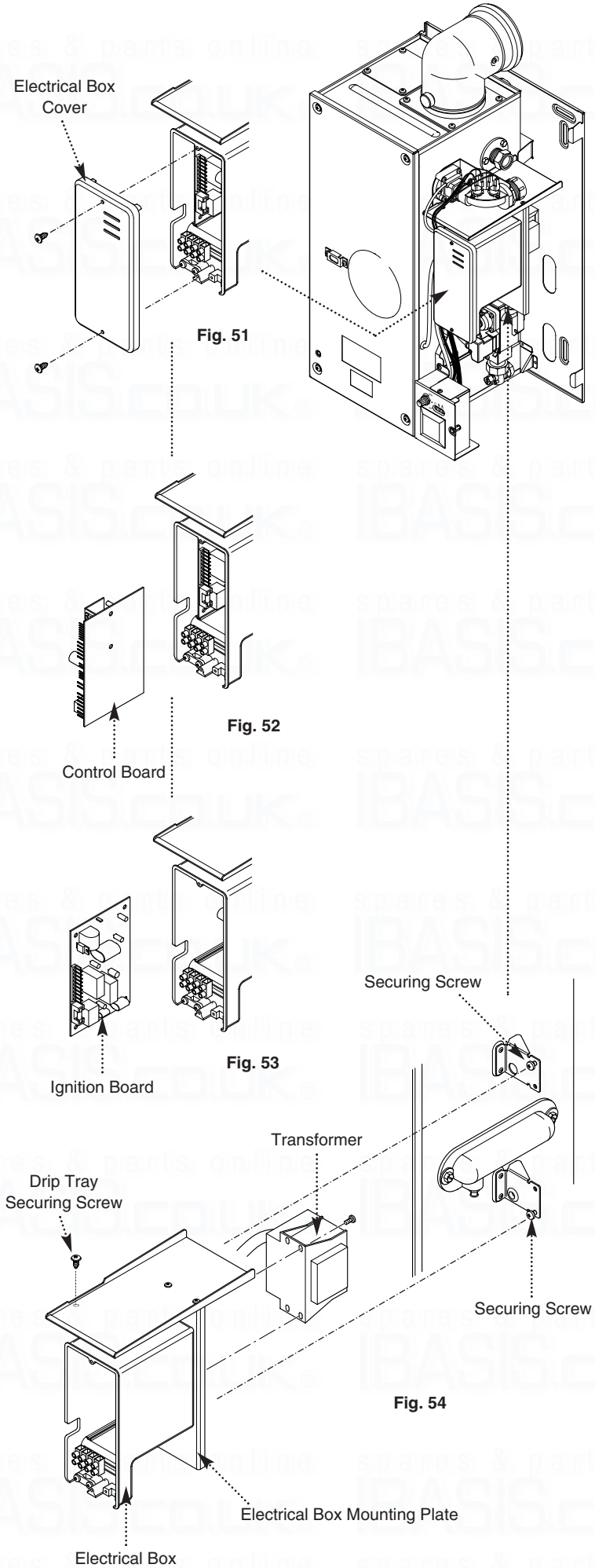

13.0 Changing Components

The fan and venturi, gas valve, injector pipe, condensate trap, fan protection sensor, spark and sensing electrodes can be accessed and changed on the removal of the airbox door panel.

1. Remove the airbox door panel by loosening the four ¼ turn screws (Fig. 55).

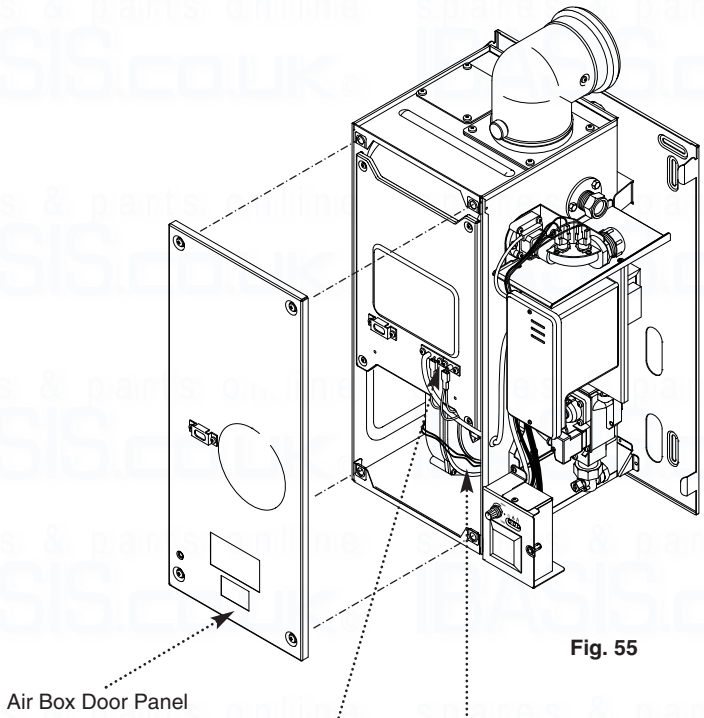

Fig. 55

13.8 Spark and Sensing Electrodes (Fig. 56)

1. Disconnect the leads from the centre and right hand terminals (earth and flame sensing probe). The spark electrode lead is permanently fixed to the electrode. Undo the re-usable cable tie and pull down the sleeving to expose the joint in the electrode lead. Disconnect the lead.

Spark	-	Opaque cable
Earth	-	Black cable
Sensing	-	White cable

2. Remove the two screws securing each of the electrodes to the combustion box door and remove the electrodes.

3. Fit the new electrodes and reassemble in reverse order.

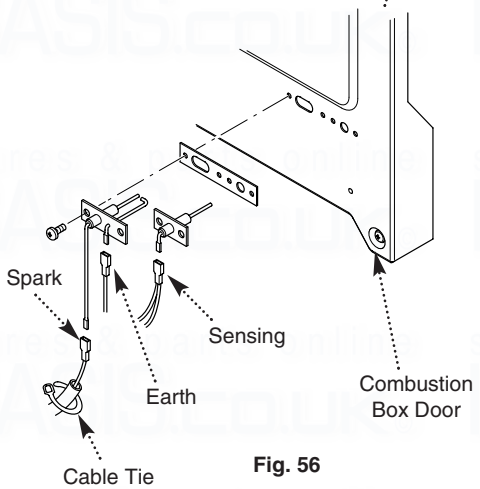

Fig. 56

NOTE: The spark electrode sleeve should always cover the joint in the electrode lead to prevent tracking.

13.9 Fan (Fig. 57)

1. Loosen the screw holding the injector pipe into the venturi.

2. Remove the electrical connections to the fan protection sensor on the fan.

3. Remove the wing nuts securing the fan to the base of the combustion box.

4. Lower the fan and remove.

5. Disconnect the electrical supply from the right hand rear of the fan.

6. If changing the fan remove the screws securing the venturi and fan protection sensor bracket, noting the positions of the injector opening and sensor bracket, fix them to the new fan.

7. Fit the new fan and reassemble in reverse order.

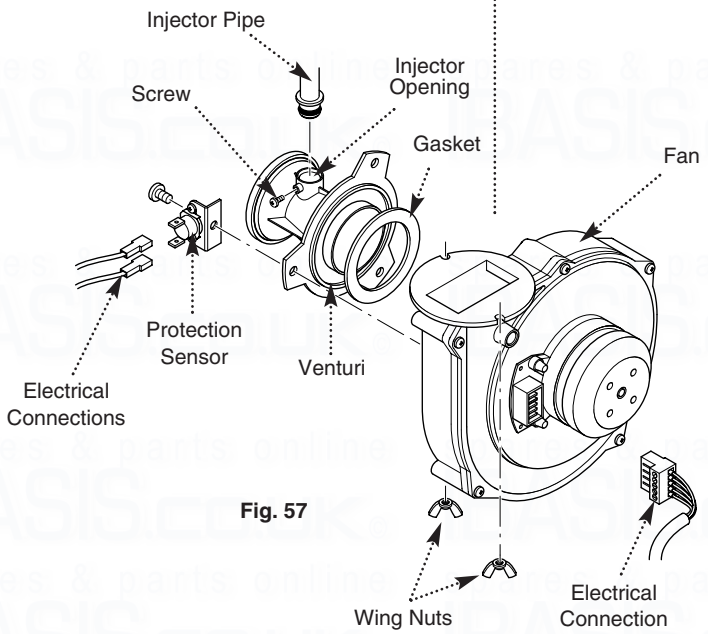

Fig. 57

The injector pipe, condensate trap and gas valve can be changed after the removal of the fan.

13.0 Changing Components

The removal of the fan is necessary to enable the changing of the injector pipe, condensate trap and gas valve (see section 13.9).

13.10 Injector Pipe (Fig. 58)

1. Remove the injector pipe by pulling out from the 'O' ring joint in the gas valve.

2. Fit the new injector pipe and reassemble in reverse order.

13.11 Gas Valve (Fig. 58)

1. Release user interface and pivot downward for better access.

2. Disconnect the gas inlet union at the gas tap.

3. Undo the case pressure pipe from the gas valve.

4. Undo the screw and disconnect the electrical plug from the gas valve.

5. Remove the two gas valve securing screws from inside the air box holding the gas valve.

6. Remove the gas valve from the airbox side.

7. Remove the nut union, aluminium spacer and its gasket from the gas valve.

8. Fit the nut union, aluminium spacer and its gasket to the new valve.

9. Fit the new gas valve and reassemble in reverse order.

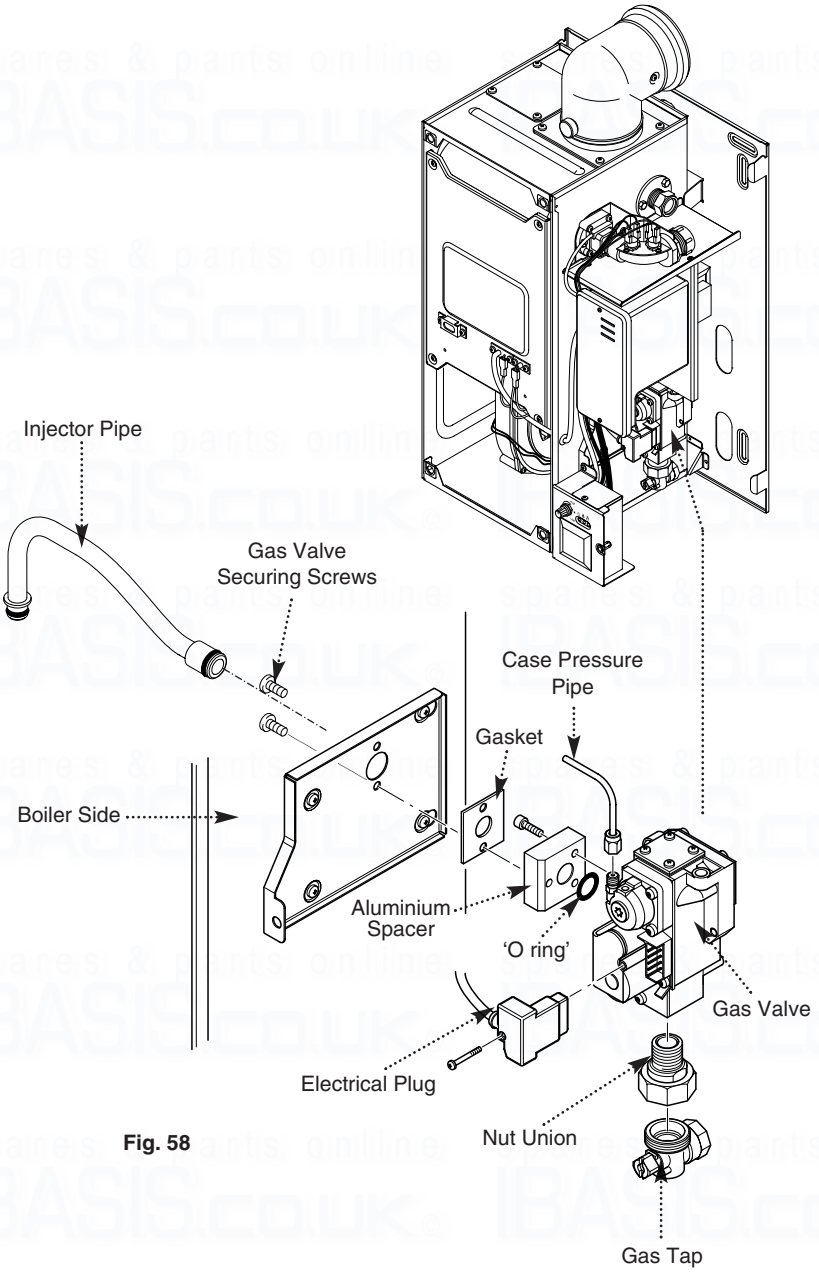

Fig. 58

13.12 Condensate Trap (Fig. 59)

1. Disconnect the condensate trap from the base of the heat exchanger.

2. Disconnect the condensate drain (outside the boiler) from the condensate trap.

3. Undo the condensate trap lock nut.

4. Remove the condensate trap from the boiler.

5. Disconnect the sensor leads.

Fit the new condensate trap and reassemble in reverse order.

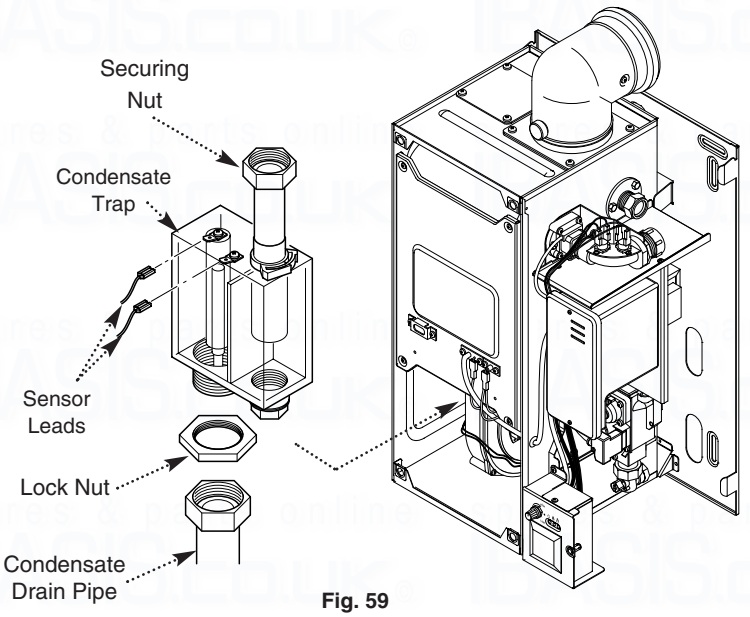

Fig. 59

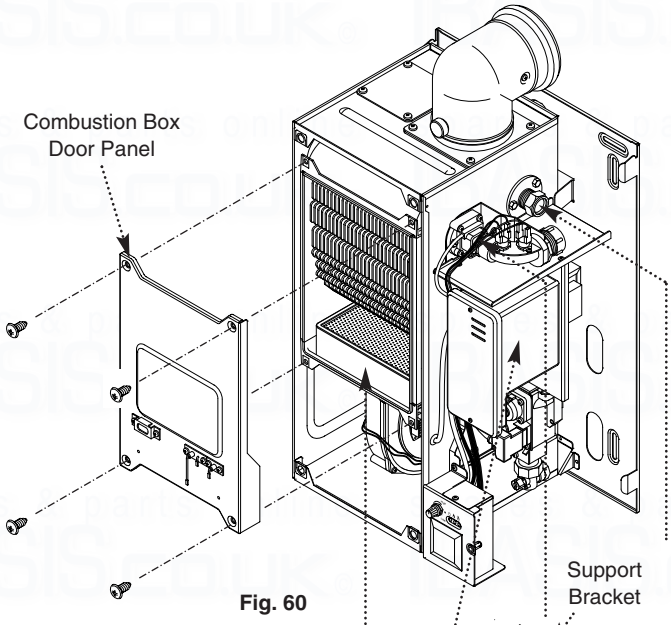

Fig. 60

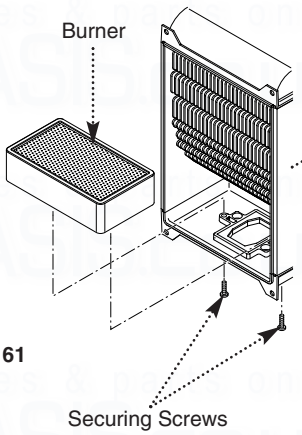

Fig. 61

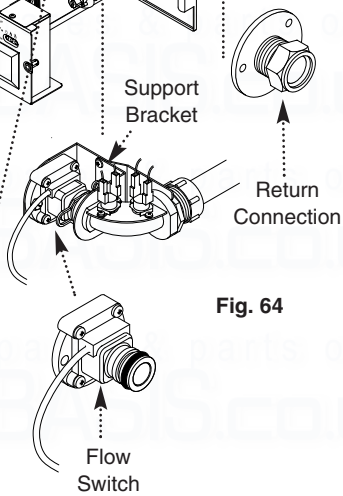

Fig. 64

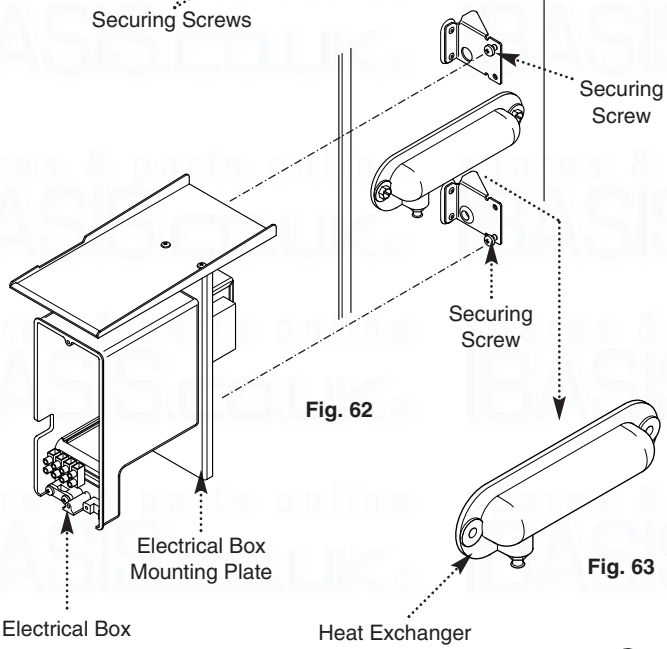

Fig. 62

Fig. 63

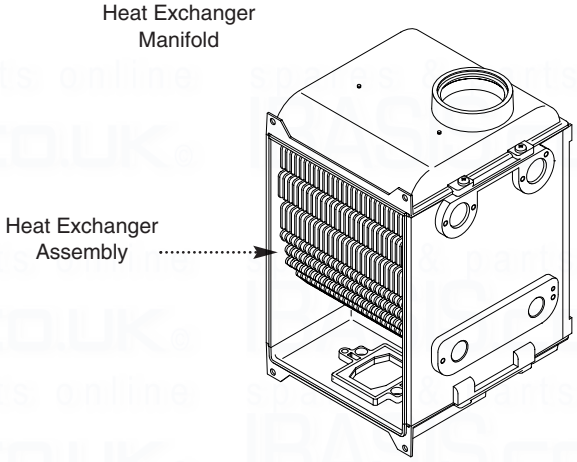

13.0 Changing Components

The burner and heat exchanger can be changed after removal of the combustion box door. To change the heat exchanger, the fan and burner must be removed first (see section 13.9).

1. Remove the combustion box door by removing the four securing screws (Fig. 60).

IMPORTANT: On refitting the combustion box door check the condition of the combustion box door seals.

13.13 Burner (Fig. 61)

WARNING: The burner skin is fragile: Handle with care

1. Remove the two screws securing the burner to the base of the combustion box.

2. Remove the burner carefully from the combustion box base.

3. Fit the new burner and reassemble in reverse order.

13.14 Heat Exchanger

1. Drain the boiler (see section 13.1 paragraph 2 & 3).

2. Remove all components in the base of the airbox.

3. Undo the screws on the support bracket. Remove the screws securing the flow switch and return connections and remove the connections (Fig. 64).

4. Remove the electrical connections from the P.C.B.s (see section 13.5 & 13.6).

5. Loosen the two screws securing the electrical box mounting plate and remove the assembly (Fig. 62).

6. Remove the screws securing the heat exchanger manifold and remove the manifold (Fig. 63).

7. Lift the heat exchanger assembly and rotate the bottom upwards whilst pulling it forwards out of the airbox.

8. Fit the new heat exchanger and reassemble in reverse order.

9. Recommission the boiler and check the inhibitor concentration (see Section 6.2 and 10.1).

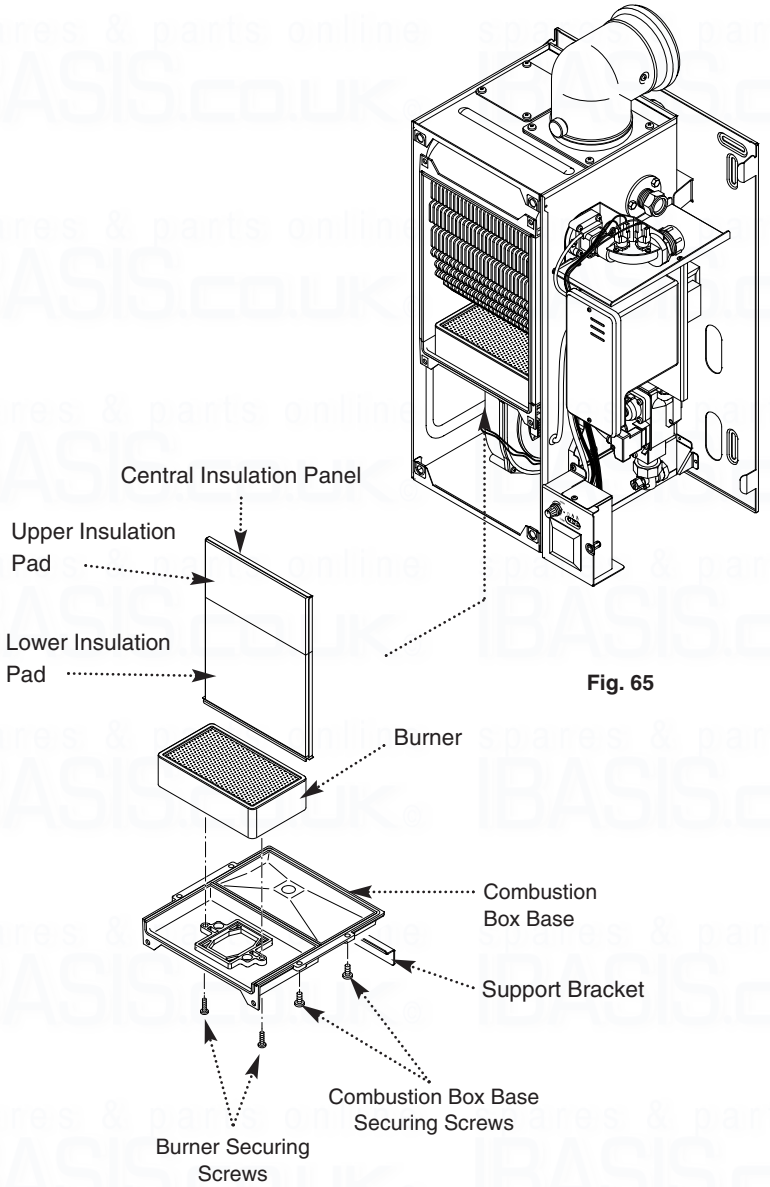

Fig. 65

13.15 Heat Exchanger Lower Insulation Pad (Fig. 65)

1. Remove all components in the base of the airbox.

2. Remove the burner (see section 13.13).

3. Remove the four bolts securing the combustion box base.

4. Remove the combustion box base.

5. Pull the central insulation panel down from the centre of the heat exchanger and remove the lower insulation pad.

6. Fit the new insulation pad and reassemble in reverse order.

13.16 Heat Exchanger Upper Insulation Pad (Fig. 65)

1. Remove all components in the base of the airbox.

2. Remove the burner (see section 13.13).

3. Remove the heat exchanger (see section 13.14).

4. Remove the four bolts securing the combustion box base.

5. Remove the combustion box base.

6. Pull the central insulation panel down from the centre of the heat exchanger.

7. Fit the new insulation pad and reassemble in reverse order.

14.0 Fault Finding

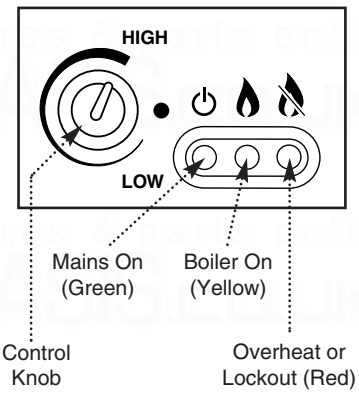

Please Check Following Points Before Going Through The Fault Finding Chart.

- Check electrical system earth continuity, short circuit, resistance to earth, fuse failure and a minimum voltage of 195 is present at input connections on boiler, check internal fuse is OK, unit is not in lockout.
- There is an adequate gas supply pressure at the inlet. A minimum pressure of 18.1 mb is required at the inlet.
- All isolating valves are open and both the boiler and the system are vented.
- Check installation is correct, including the flue system.

Mains LED off ? — **YES** → Go to **MAINS LED OFF** section of the fault finding instructions.

NO ↓

Mains LED flashing ? — **YES** → Go to **MAINS LED FLASHING** section of the fault finding instructions.

NO ↓

Lockout LED flashing 5 times a second ? — **YES** → Go to **DRY-FIRE LOCKOUT** section of the fault finding instructions.

NO ↓

Lockout LED flashing once a second ? — **YES** → Go to **SAFETY LOCKOUT** section of the fault finding instructions.

NO ↓

Lockout LED flashing once every 4 seconds ? — **YES** → Go to **THERMISTOR OPEN CIRCUIT** section of the fault finding instructions.

NO ↓

Lockout LED continuously on ? — **YES** → Go to **IGNITION LOCKOUT** section of the fault finding instructions.

NO ↓

Fan not running — **YES** → Go to **NO FAN** section of the fault finding instructions.

NO ↓

Lockout will not reset ? — **YES** → Go to **NO LOCKOUT RESET** section of the fault finding instructions.

Mains LED Off

Is boiler supply fuse OK ?
- NO → Replace with 3A fuse.
- YES ↓

Is there 230 V at mains input terminal block **(A)** ?
- NO → No mains supply to boiler.
- YES ↓

Is there 230 V at mains input connection to control PCB **(B)** ?
- NO → Wiring from mains input terminal block to control PCB faulty.
- YES ↓

Is there 230 V at control PCB transformer mains connection **(C)** ?
- NO → Replace control PCB.
- YES ↓

Is there 24 V at control PCB transformer 24V connection **(D)** ?
- NO → Replace transformer.
- YES ↓

Is control PCB fuse F2 OK ?
- NO → Check for short circuits on control PCB and fan. If OK replace fuse.
- YES ↓

Is wiring from control PCB to interface PCB OK **(E)** ?
- NO → Rectify wiring
- YES ↓

Does boiler produce heat ?
- NO → Replace control PCB.
- YES ↓

Replace interface PCB.

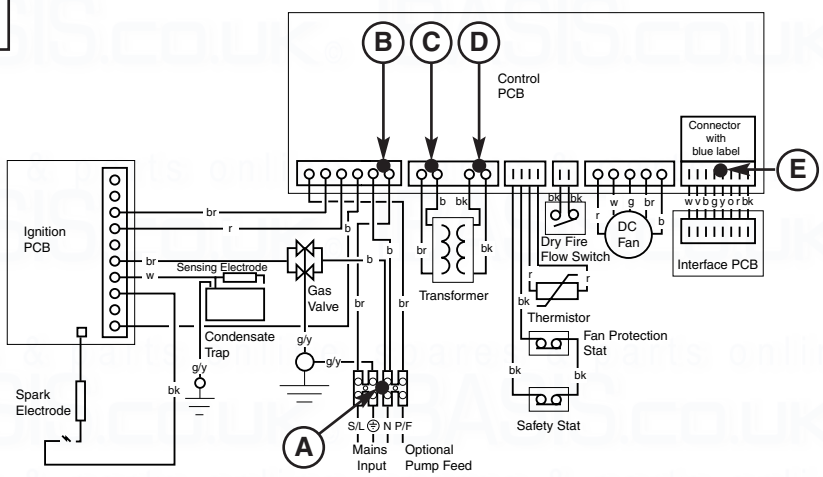

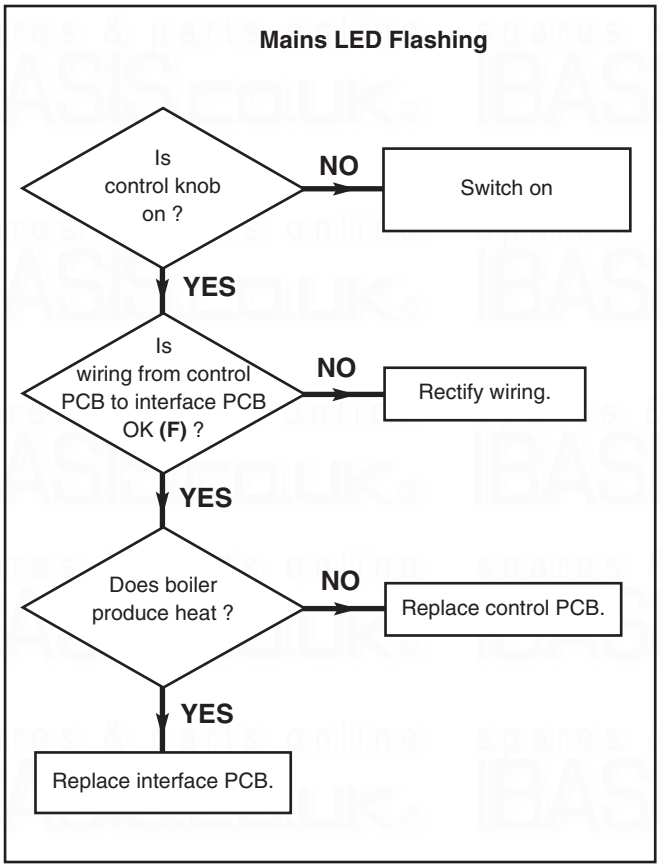
Mains LED Flashing
Is control knob on ?
NO
Switch on
YES
Is wiring from control PCB to interface PCB OK (F) ?
NO
Rectify wiring.
YES
Does boiler produce heat ?
NO
Replace control PCB.
YES
Replace interface PCB.

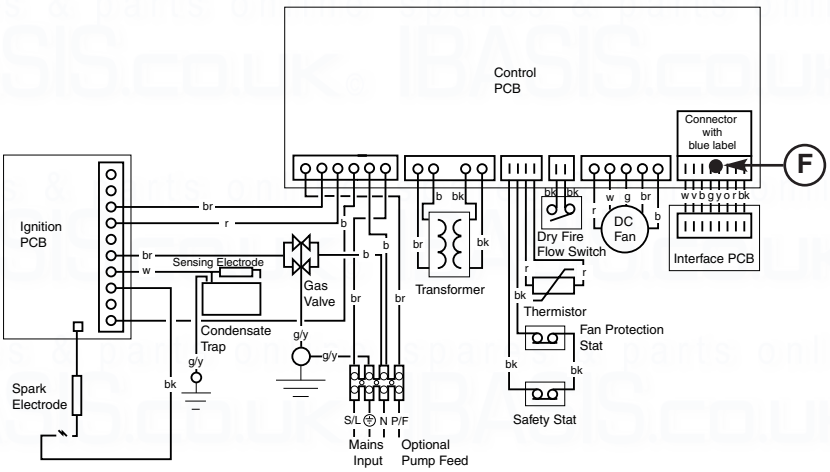
Control PCB
Connector with blue label
F
Ignition PCB
Sensing Electrode
Gas Valve
Condensate Trap
Spark Electrode
Transformer
Dry Fire Flow Switch
DC Fan
Interface PCB
Thermistor
Fan Protection Stat
Safety Stat
S/L N P/F
Mains Input
Optional Pump Feed

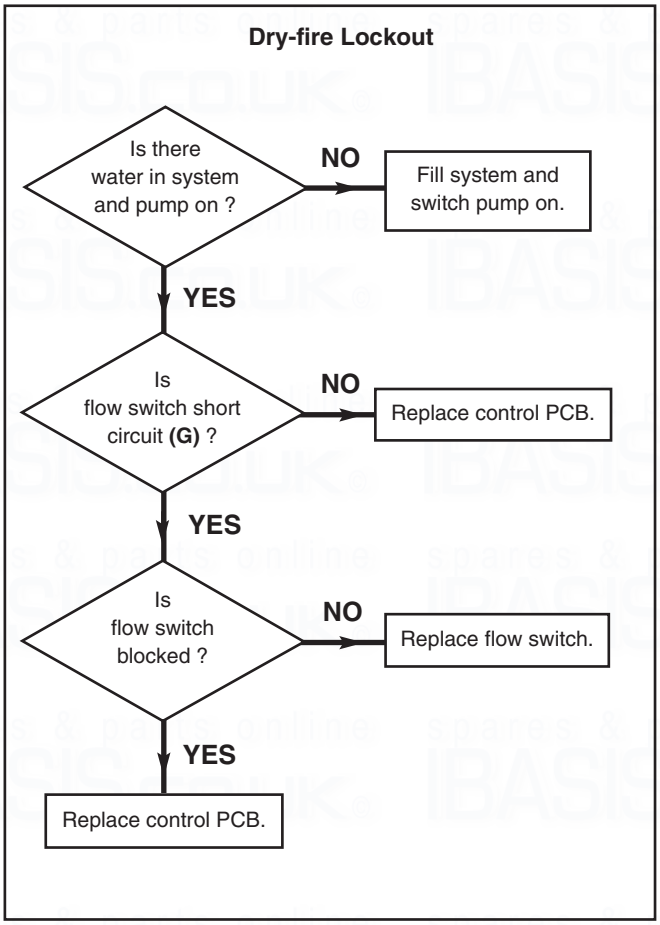
Dry-fire Lockout
Is there water in system and pump on ?
NO
Fill system and switch pump on.
YES
Is flow switch short circuit (G) ?
NO
Replace control PCB.
YES
Is flow switch blocked ?
NO
Replace flow switch.
YES
Replace control PCB.

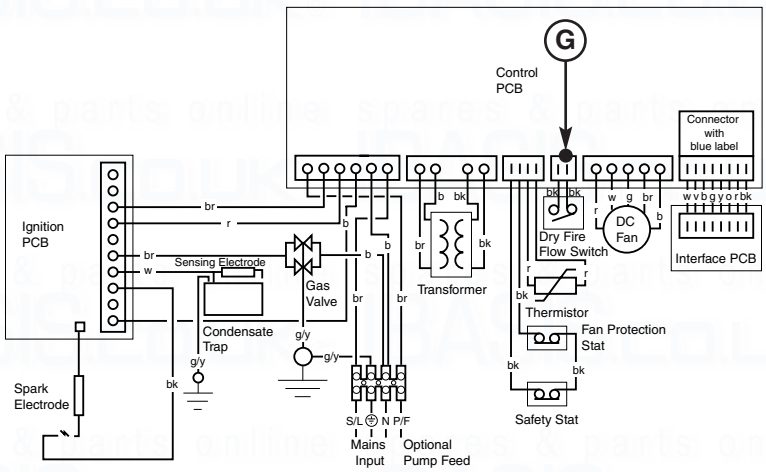
G
Control PCB
Connector with blue label
Ignition PCB
Sensing Electrode
Gas Valve
Transformer
Dry Fire Flow Switch
DC Fan
Interface PCB
Thermistor
Fan Protection Stat
Condensate Trap
Spark Electrode
Safety Stat
S/L N P/F
Mains Input
Optional Pump Feed

Safety Lockout

When flow temp < 60°C. Safety thermostat open circuit ? (measured at safety thermostat)
- YES → Replace safety thermostat (black)
- NO ↓

When fan ambient temp < 90°C. Fan protection stat open circuit ? (measured at fan protection thermostat)
- YES → Replace fan protection stat.
- NO ↓

Are control PCB safety thermostat connections open circuit ? **(H)**
- YES → Wiring from control PCB to safety or fan protection thermostats faulty.
- NO ↓

Is flow temperature thermistor resistance between 0.5kΩ and 20kΩ ? (measured at flow temperature thermistor)
- NO → Replace flow temperature thermistor (red)
- YES ↓

Is combustion box door seal damaged or not in place ?
- YES → Replace combustion box door seal.
- NO ↓

Replace control PCB.

Thermistor Open Circuit

Open circuit across thermistor connections ?
- YES → Replace thermistor
- NO ↓

Open circuit across thermistor connections on control PCB ?
- YES → Wiring from thermistor to logic PCB faulty
- NO ↓

Replace control PCB

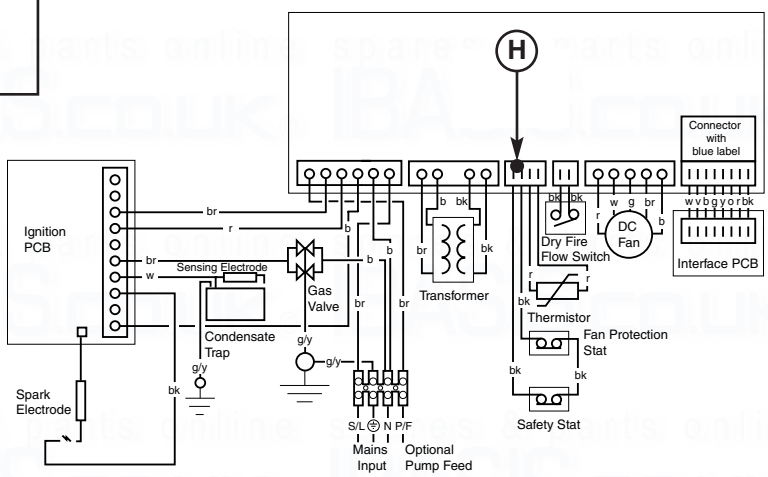

No Fan

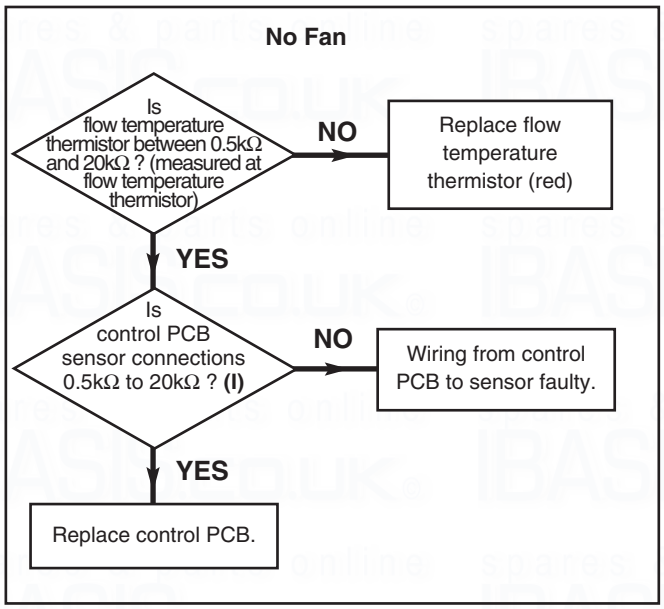

No Lockout Reset

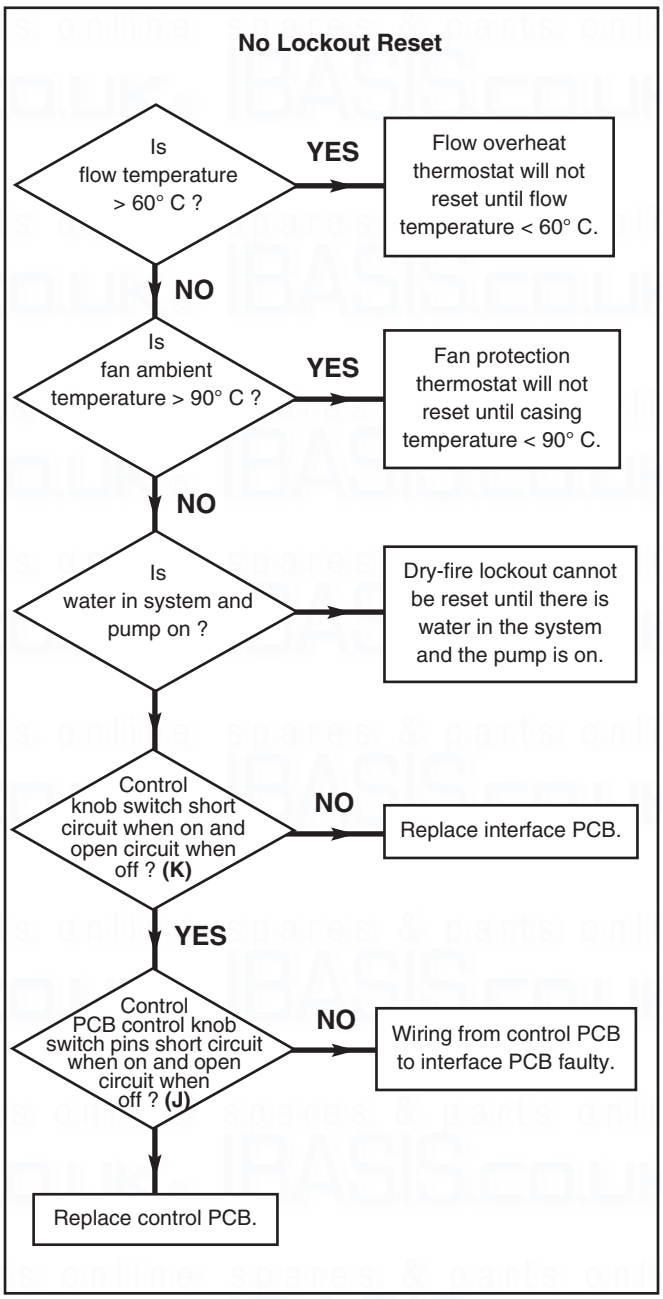

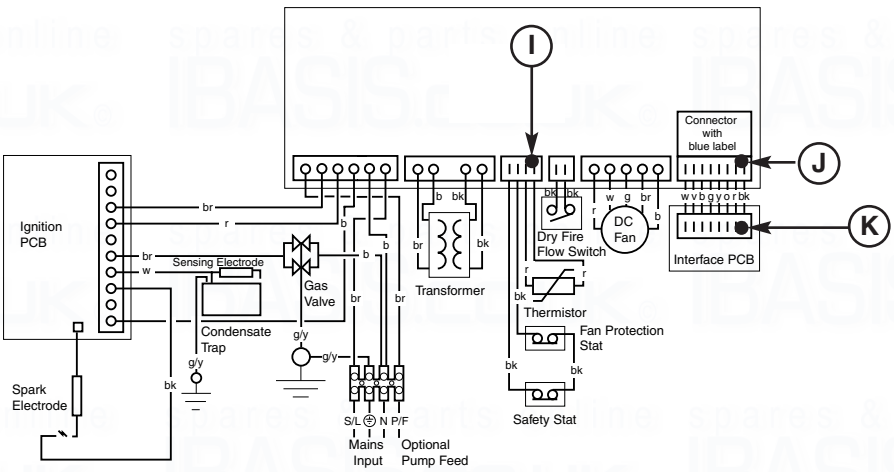

14.0 Fault Finding

Ignition Lockout

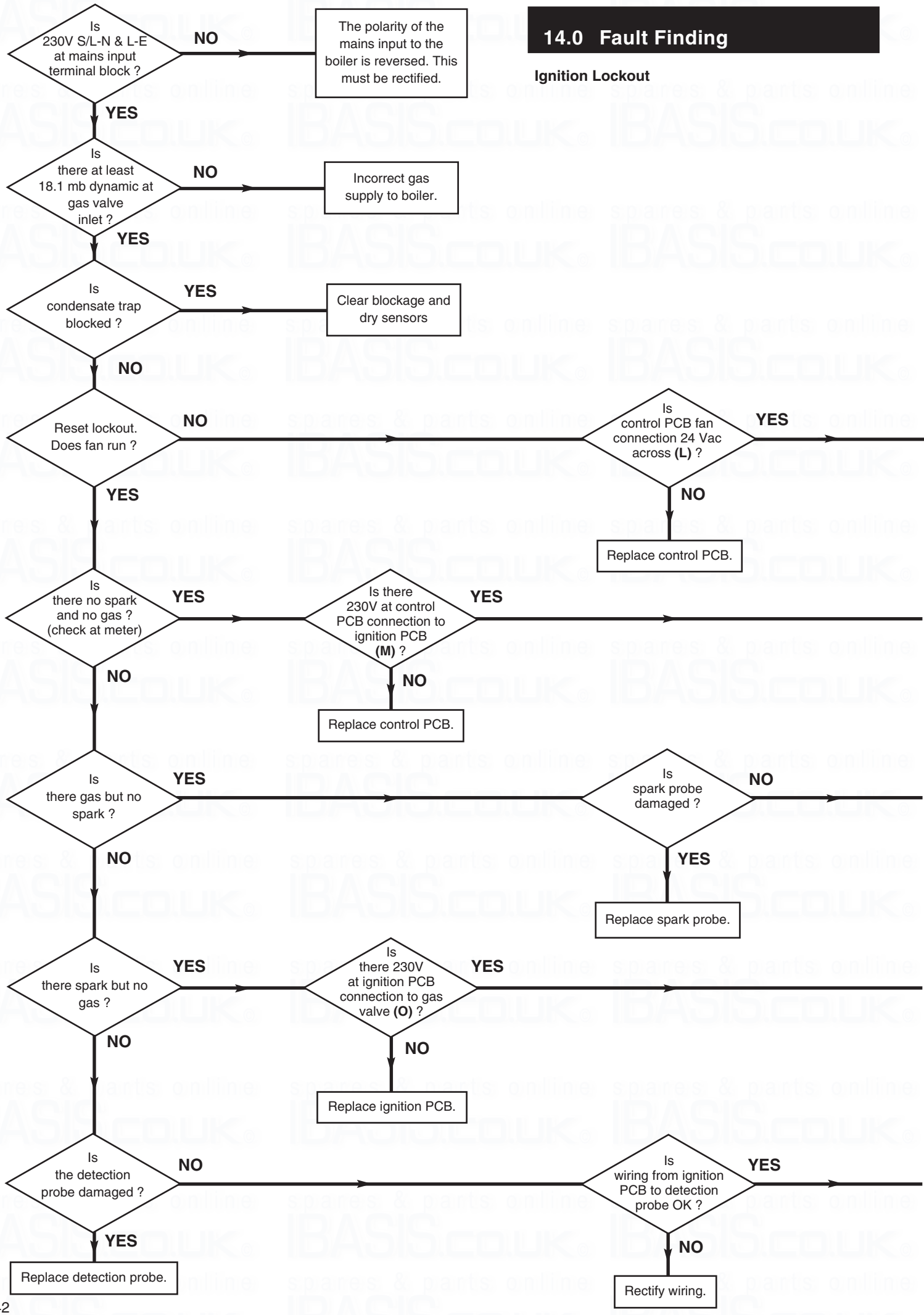

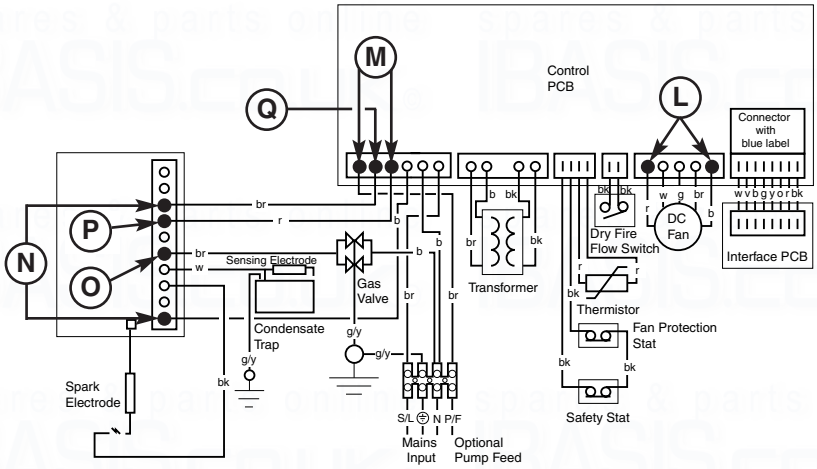

Is fan connection 24Vac across **(L)** ?

YES → Replace fan.

NO → Wiring from control PCB to fan faulty.

Is there 230V at ignition PCB connection to control PCB **(N)** ?

YES → Is ignition PCB fuse OK ?

YES → Replace ignition PCB.

NO → Check for short circuits on ignition PCB and gas valve. If OK replace fuse.

NO → Wiring from control PCB to ignition PCB faulty.

Is spark gap between 3 and 5mm ?

YES → Is wiring from ignition PCB to spark probe OK ?

YES → Replace ignition PCB.

NO → Rectify wiring.

NO → Set spark gap to 4mm.

Is there 230Vdc at the end of the gas valve lead ?

YES → Is sensing tube blocked ?

YES → Unblock Tube.

NO → Replace gas valve.

NO → Replace gas valve lead.

Is there 230V ignition PCB burner on pin to control PCB **(P)** ?

YES → Is there 230V control PCB burner on pin to ignition PCB **(Q)** ?

YES → Replace control PCB.

NO → Burner On wiring from ignition PCB to control PCB faulty.

NO → Replace ignition PCB.

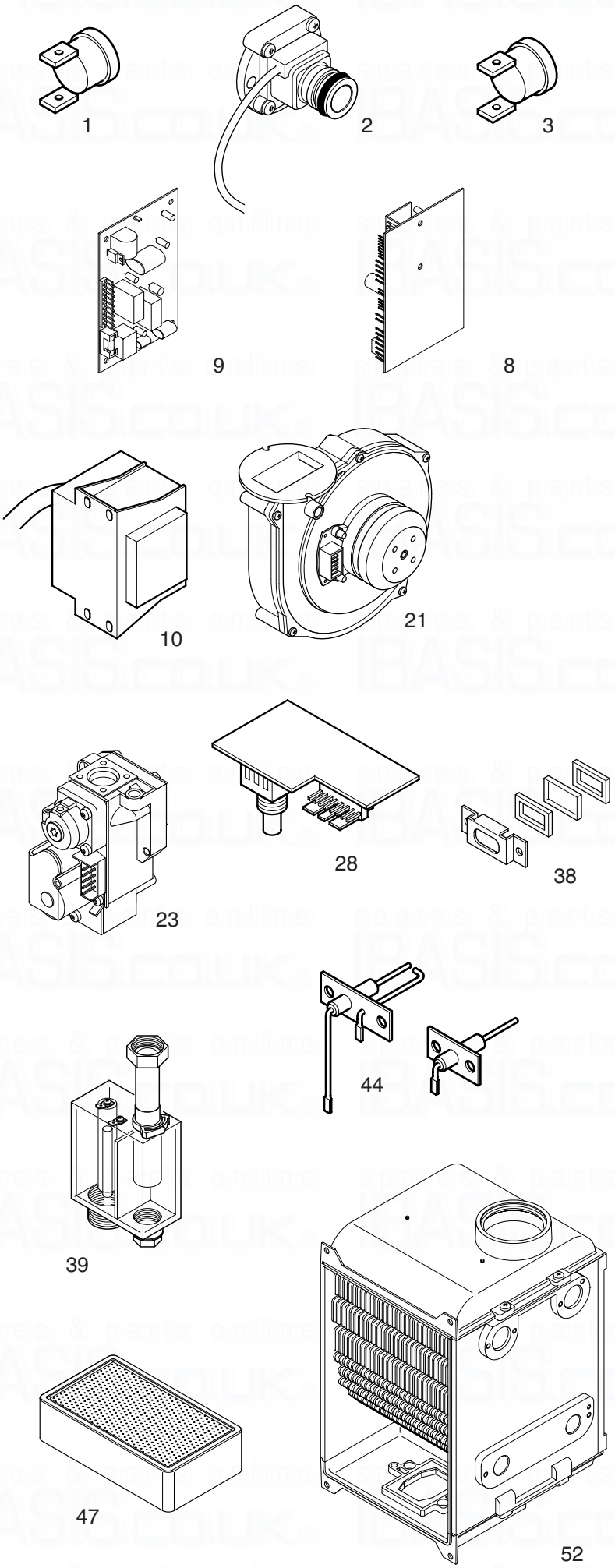

15.0 Short Parts List

Short Parts List

Key No.	G.C. No.	Description	Manufacturers Part No.
1	E06 058	Flow Temperature Thermistor (Red)	240670
2	E06 059	Flow Switch	242459
3	E06 060	Safety Thermostat (Black)	242235
8	E06 064	Control PCB	5106789
9	E06 065	Ignition PCB	241838
10	E06 066	Transformer	240236
21	E06 074	Fan	242472
23	E06 075	Gas Valve	242473
28	E06 079	Interface PCB	241839
38	E06 085	Viewing Window	242484
39	E06 086	Condensate Trap	242485
44	E06 091	Electrodes Kit	242490
47	E06 093	Burner Assy	242492
52	E06 097	Heat Exchanger Assy	242497

16.0 Notes

spares & parts online IBASIS.CO.UK

16.0 Notes

spares & parts online IBASIS.CO.UK®

Baxi UK Limited manufacture a comprehensive range of products for the domestic heating market.

Gas Central Heating Boilers
(Wall, Floor and Fireside models).

Independent Gas Fires.

Renewal Firefronts.

Gas Wall Heaters.

Solid Fuel Fires.

If you require information on any of these products, please write, telephone or fax to the Sales Department.

Comp N° 5106739 - Iss 4 - 9/02

spares & parts online IBASIS.CO.UK

After Sales Service
08706 096 096

Technical Enquiries
08706 049 049

BAXI

Baxi UK Limited
Brownedge Road
Bamber Bridge Preston
Lancashire
PR5 6SN
www.baxi.com