Please leave these instructions with the user

Baxi Arena Super
Baxi Baroque Super

Living Flame Effect Gas Fires

Natural Gas

Comp N° 235317 - Issue 8 - 11/99

Installation and Servicing Instructions

Baxi Arena Super - G.C.N° 32 077 34
Baxi Baroque Super - G.C.N° 32 077 35

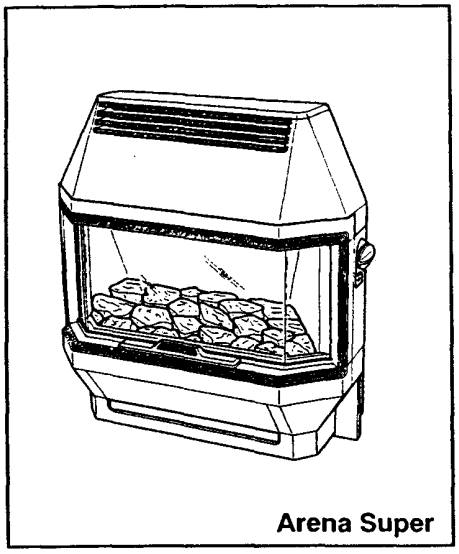

Arena Super

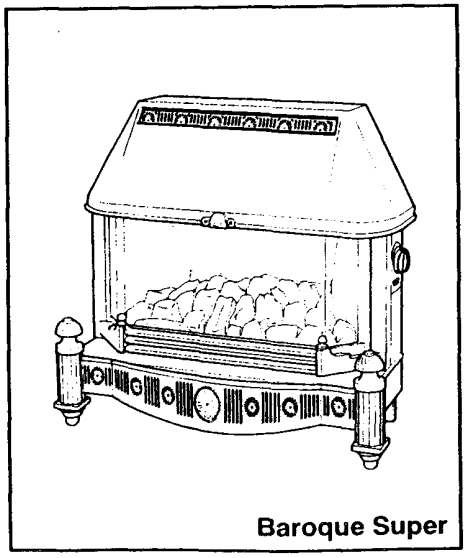

Baroque Super

BAXI

Contents - Page 2

Introduction PAGE 3

Technical Data PAGE 4

Site Requirements PAGE 5-6

Fireplace Opening
Hearth Mounting
Wall Fixing
Existing Chimneys
Pre-Cast Flues
Gas Supply
Electrical Supply

Installation PAGE 7-9

Initial Preparation
Fitting the Fire
Electrical Connections

Commissioning the Fire PAGE 10-12

Spillage Detection

Fitting the Outer Case PAGE 13-14

Baxi Baroque
Baxi Arena

Annual Servicing PAGE 15-19

Cleaning the Pilot Assembly
Cleaning the Burner/Injectors

Changing Components PAGE 20-27

Glass Frame
Frame Sealing Rope
Coal Bed
Burners and Injectors
Light Switch
Electrode Lead
Spark Generator
Resistor
Pilot Assembly
Electro-Magnetic Unit
Control Tap and Micro-switch

Fault Finding PAGE 28-29

Short Parts List PAGE 30

INTRODUCTION - Page 3

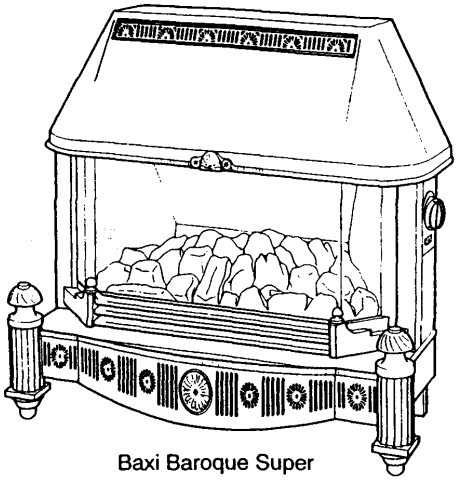

Baxi Baroque Super

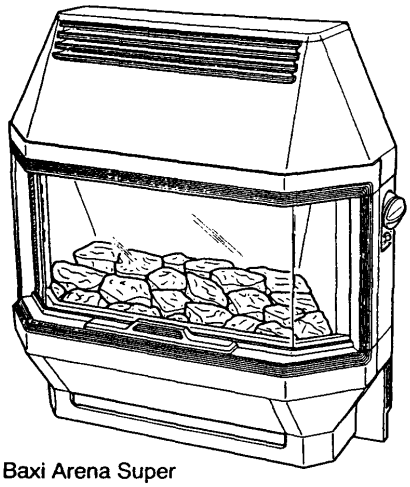

Baxi Arena Super

NOTICE

DISCOLOURATION OF WALL SURFACES

Most heating appliances generate warm air convection currents and transfer heat to any wall surface against which they are situated.

Some soft furnishings (such as blown vinyl wallpapers) may not be suitable for use where they are subject to temperatures above normal room levels and the manufacturer's advice should be sought before using this type of wall covering adjacent to any heating appliance.

The likelihood of wall staining from convected air currents will be increased in environments where high levels of cigarette smoke or other contaminants exist.

WARNING

The addition of anything that may interfere with the normal operation of the appliance (e.g. FLUE DAMPERS, ECONOMISERS etc.) without the express written permission of BAXI LIMITED could invalidate the appliance warranty and infringe the GAS SAFETY (Installation and Use) REGULATIONS.

Description

The Baxi Baroque Super and Baxi Arena Super are living flame effect gas fires with a heat input of 5.57 kW (19,000 Btu/h) and an output of 3.40 kW (11,590 Btu/h) at its maximum setting. The fires are available for use with Gas Type G20 (Natural Gas) at 20mbar supply pressure. The fires are suitable for either hearth or wall mounting and are designed to be used on NATURAL GAS ONLY. **NOTE: The data and spillage test labels are located on the inner fire support feet behind the fender front.**

Electronic ignition is provided to light the pilot. The fire is controlled by a control knob positioned on the right hand side of the case. This control knob has six positions giving a choice of four output settings.

Position	●	-	OFF
Position	★🔥	-	PILOT
Position	1	-	LOW
Position	2	-	MEDIUM
Position	3	-	MEDIUM/HIGH
Position	4	-	HIGH

The artificial coal bed may be illuminated by concealed bulbs as and when required. The light effect is operated by a switch situated below the control knob. It may be used whether the fire is ON or OFF.

The fire is manufactured to British Standards 5258 Part 5 and 6332 Part 2.

Installation

The installation must be carried out by a CORGI Registered Installer or other competent person and be in accordance with the relevant requirements of the GAS SAFETY (Installation and Use) REGULATIONS, the BUILDING REGULATIONS (Scotland) (Consolidation), the LOCAL BUILDING REGULATIONS and the CURRENT I.E.E. WIRING REGULATIONS. It should also be in accordance with the relevant BRITISH STANDARD CODES OF PRACTICE.

Important Information

This product contains Refractory Ceramic Fibres (R.C.F.) which are man-made vitreous silicate fibres. Excessive exposure to these materials may cause temporary irritation to eyes, skin and respiratory tract. Care must be taken when handling these articles to ensure the release of dust or fibres is kept to a minimum.

To ensure that the release of fibres from these articles is kept to a minimum, during installation and servicing it is recommended that a H.E.P.A. filtered vacuum is used to remove any dust, soot or other debris accumulated in and around the appliance. This should be performed before and after working on the installation.

It is recommended that any replaced item(s) are not broken up but sealed within heavy duty polythene bags and clearly labelled "R.C.F. waste". This is not classified as "hazardous waste" and may be disposed of at a tipping site licensed for the disposal of industrial waste.

Protective clothing is not required when handling these articles but it is recommended that gloves are worn and the normal hygiene rules of not smoking, eating or drinking in the work area are followed and always wash hands before eating or drinking.

TECHNICAL DATA - Page 4

Baxi Baroque Super

Heat Input	High	Med-High
kW	5.57	4.84
Btu/h	19,000	16,500
Heat Input	Med	Low
kW	3.22	2.11
Btu/h	11,000	7,200
Heat Output	High	
kW	3.40	
Btu/h	11,590	
Setting Pressure	Cold	
mbar	14.0 ± 0.5	
in wg	5.6 ± 0.2	
Thermocouple Output	9.4 - 13mv	

Gas Connection	Rc¼ (¼in BSPT Internal)	
Electricity Supply	230V~50Hz 120W External fuse - 3A	
Controls	Rotary gas tap with oxy-pilot device. Electronic ignition of pilot.	
Gas Rate (after 10 mins)	0.53m³/h (18.7ft³/h)	
Lifting Weight	27.0 kg (59.5 lbs)	
Outercase Dimensions	Height	689mm
	Width	703mm
	Depth	337mm

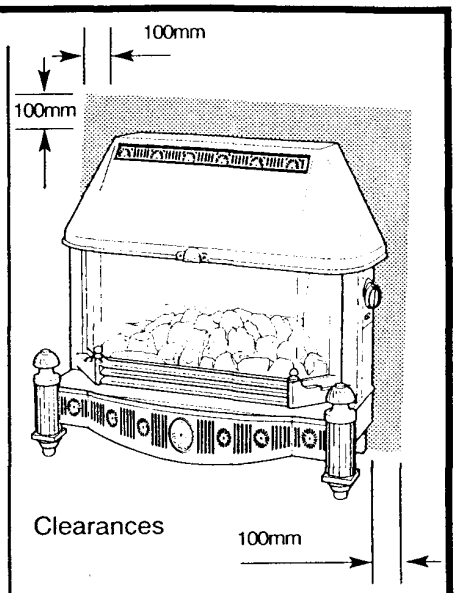

Baxi Arena Super

Heat Input	High	Med-High
kW	5.57	4.84
Btu/h	19,000	16,500
Heat Input	Med	Low
kW	3.22	2.11
Btu/h	11,000	7,200
Heat Output	High	
kW	3.40	
Btu/h	11,590	
Setting Pressure	Cold	
mbar	14.0 ± 0.5	
in wg	5.6 ± 0.2	
Thermocouple Output	9.4 - 13mv	

Gas Connection	Rc¼ (¼in BSPT Internal)	
Electricity Supply	230V~50Hz 120W External fuse - 3A	
Controls	Rotary gas tap with oxy-pilot device. Electronic ignition of pilot.	
Gas Rate (after 10 mins)	0.53m³/h (18.7ft³/h)	
Lifting Weight	27.0 kg (59.5 lbs)	
Outercase Dimensions	Height	689mm
	Width	680mm
	Depth	323mm

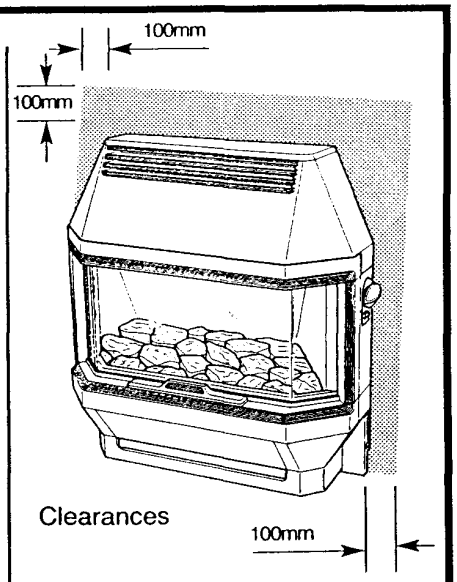

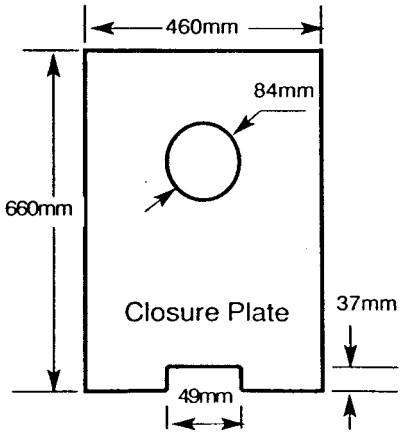

B.S. Codes of Practice

STANDARD	SCOPE
B.S. 6891	Gas Installation
B.S. 5871	Installation of gas fires, convectors and fire/back boilers.
B.S. 5440: Part 1	Flues.
B.S. 5440: Part 2	Air Supply

SITE REQUIREMENTS - Page 5

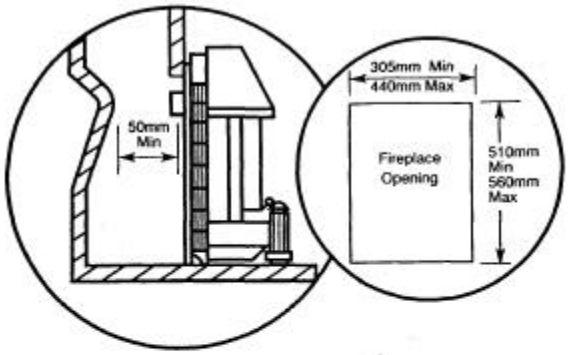

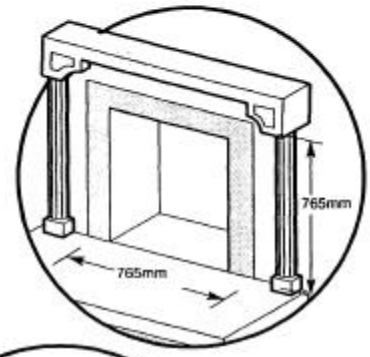

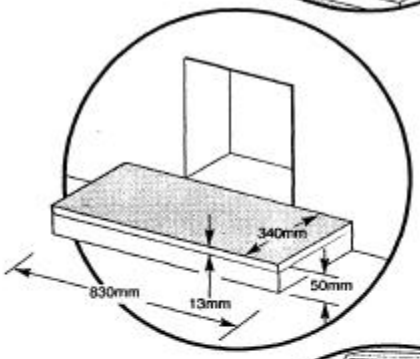

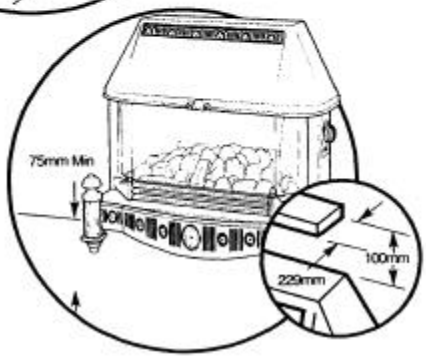

Fireplace Opening

The installation requires a fireplace opening as illustrated. At the height of the flue spigot the opening shall be no less than 100mm (4in) deep, measured from the front face of the opening to the fireplace back brick. There must be a minimum of 412mm ($16^{7}/_{32}$in) between the base of the fireplace opening and the bottom of the flue spigot.

NOTE: Where possible the fireplace opening should be to the minimum dimensions, particularly for wall mounted installations.

The fireplace must be built from non-combustible materials and have a flat vertical surface measuring 765mm ($30^{1}/_{8}$in) wide x 765mm ($30^{1}/_{8}$in) high around the fireplace opening. If a fire surround is to be used then its rear section must meet the same requirements.
Any gaps between the wall and the surround must be sealed.

HEARTH MOUNTING

If the fire unit is to be hearth mounted then the hearth must be of a non-combustible material at least 13mm (½in) thick, measuring at least 340mm ($13^{3}/_{8}$in) deep by 830mm (32¾in) wide. It must be fitted central to the fireplace opening. The top surface of the hearth should be a minimum of 50mm (2in) above floor level.
On no account should the fire be fitted directly onto a combustible floor or carpet.

WALL FIXING

If the fire is to be wall mounted, then the wall must be non-combustible and the base of the fire must be no less than 75mm (3m) above floor level.

A shelf may be fitted above the fire, provided that it is at least 100mm (4in) above the fire canopy and not more than 229mm (9in) in depth.

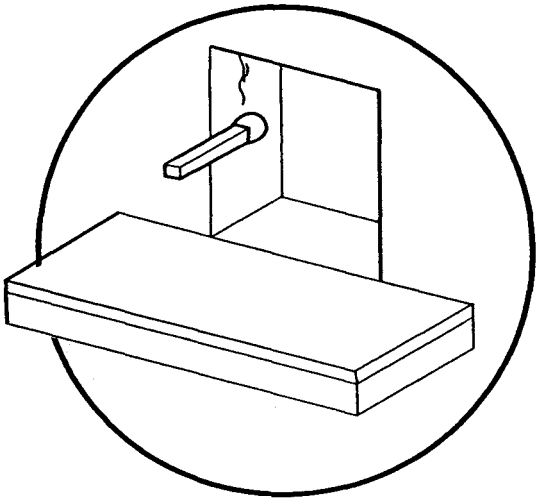

Existing Chimneys

A chimney which has previously been used to burn solid fuel MUST be swept before beginning the installation and any restrictions such as dampers or register plates must be removed. The chimney must be at least 3.10m (10ft) in height and also meet the following requirements:

1) It must not be cracked.
2) It must serve one room only.
3) It must not be joined with any void, space or any room other than that in which the fire is fitted.
4) It must not be blocked by paper or rubble etc.
5) It must have a positive flue pull up the chimney.
6) It must have a standard 229mm x 229mm (9in x 9in) section or a 127mm(5in) flue liner.

If there is no positive airflow up the chimney DO NOT FIT THE FIRE. Seek expert advice before continuing with the installation. A positive flue pull can be detected by holding a lighted match or taper near to the fireplace opening.

PRE-CAST FLUES

The fire is suitable for fitting into properly designed and constructed pre-cast flues, complying with BS 1289. The flue must be at least 3.10m (10ft) in height and have a flue way of at least 197mm x 67mm (7¾in x $2^5/_8$in) or equivalent cross-sectional area.

NOTE: It is important to ensure that the mortar between the blocks has not been forced into the flue way. If there is mortar in the flue way, then it must be removed. If raking blocks are used, they must be fitted according to the manufacturer's instructions.

Gas Supply

The gas installation should be in accordance with BS 6891. The connection to the appliance is Rc¼ (¼in BSPT internal) and is located at the centre (rear) of the fire, permanently fixed to the bottom of the back plate. Ensure that the pipework from the meter to the appliance is of adequate size. Do not use pipes of a smaller diameter than the appliance gas connection.

Electrical Supply

THIS APPLIANCE MUST BE EARTHED The mains supply required is 230V ~ 50Hz fused at 3A.

NOTE: The method of connection to the electricity supply must facilitate complete electrical isolation of the appliance, preferably by the use of a fused three pin plug and unswitched shuttered socket outlet, both complying with the requirements of BS 1363. Alternatively, connection may be made via a fused double-pole isolator with a contact separation of at least 3mm ($^1/_8$in) in all poles and serving the appliance only.

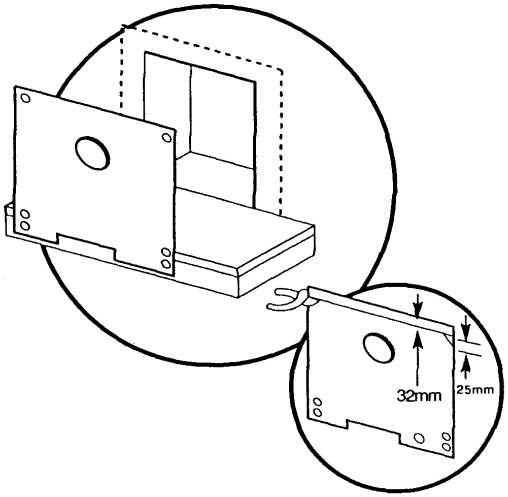

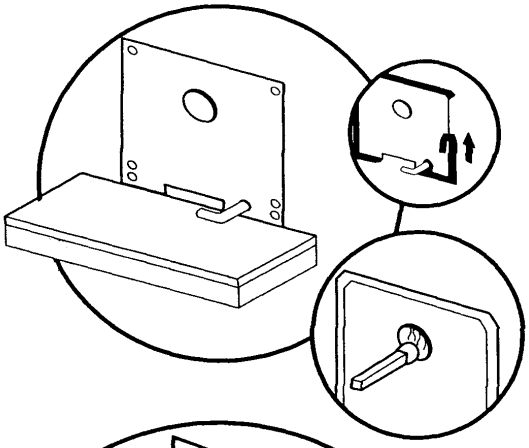

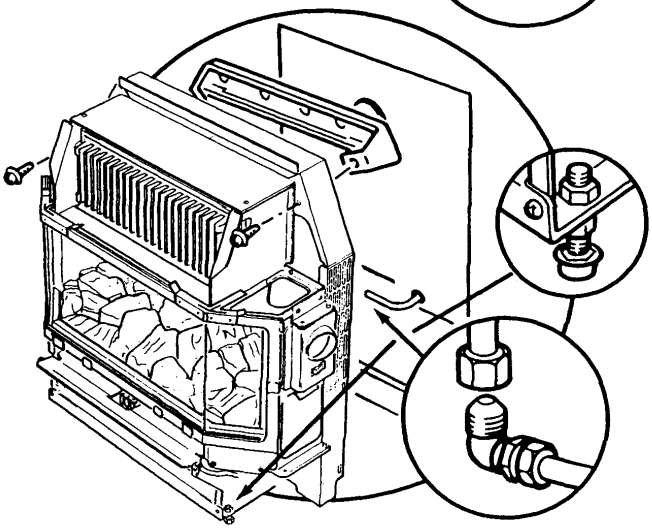

Initial Preparation

To unpack the fire, remove the packing piece complete with fitments and the pack containing the canopy and hearth assembly. Place to one side. Remove the plastic bag and remaining packing piece. Lift the fire from its carton.

Fitting the Fire

HEARTH MOUNTING

Take the closure plate provided and hold centrally across the fireplace opening with the bottom edge resting on the hearth.

NOTE: Where the closure plate is more than adequate to cover the fireplace opening and to prevent the sealing tape from becoming visible, it is advisable to trim the closure plate as follows:

Cut 32mm (1¼in) off the top of the closure plate (i.e. through the centre line of the top two fixing holes) and then trim the top corners at an angle of 45° to a depth of 25mm (1in). If necessary, cut a hole in the closure plate for the gas supply pipe.

Seal all edges of the closure plate with a suitable tape. DO NOT COVER THE AIR RELIEF OPENING IN ANY WAY. If the closure plate has been cut for the gas supply pipe, seal around this opening too.

Hold a lighted taper or match to the spigot hole in the closure plate. If the flame is pulled into the opening, proceed with the installation. If the flame is NOT pulled into the opening, pre-heat the chimney for a few minutes then re-check for flue pull. If there is still no definite flow into the spigot opening, the chimney may need attention. DO NOT CONTINUE WITH THE INSTALLATION - SEEK EXPERT ASSISTANCE.

Take the backing plate from the fittings pack and secure to the fire using the two N° 8 x $^{5}/_{8}$in self tapping screws provided.

Locate the flue spigot in the hole in the closure plate and push the fire backwards as far as possible.
NOTE: A flue spigot extension may be used with this appliance, but must not exceed 150mm (6in) when measured from the back of the fire.

Level the fire by adjusting the front feet.

Make the gas connection to the union elbow and tighten the flared joint.

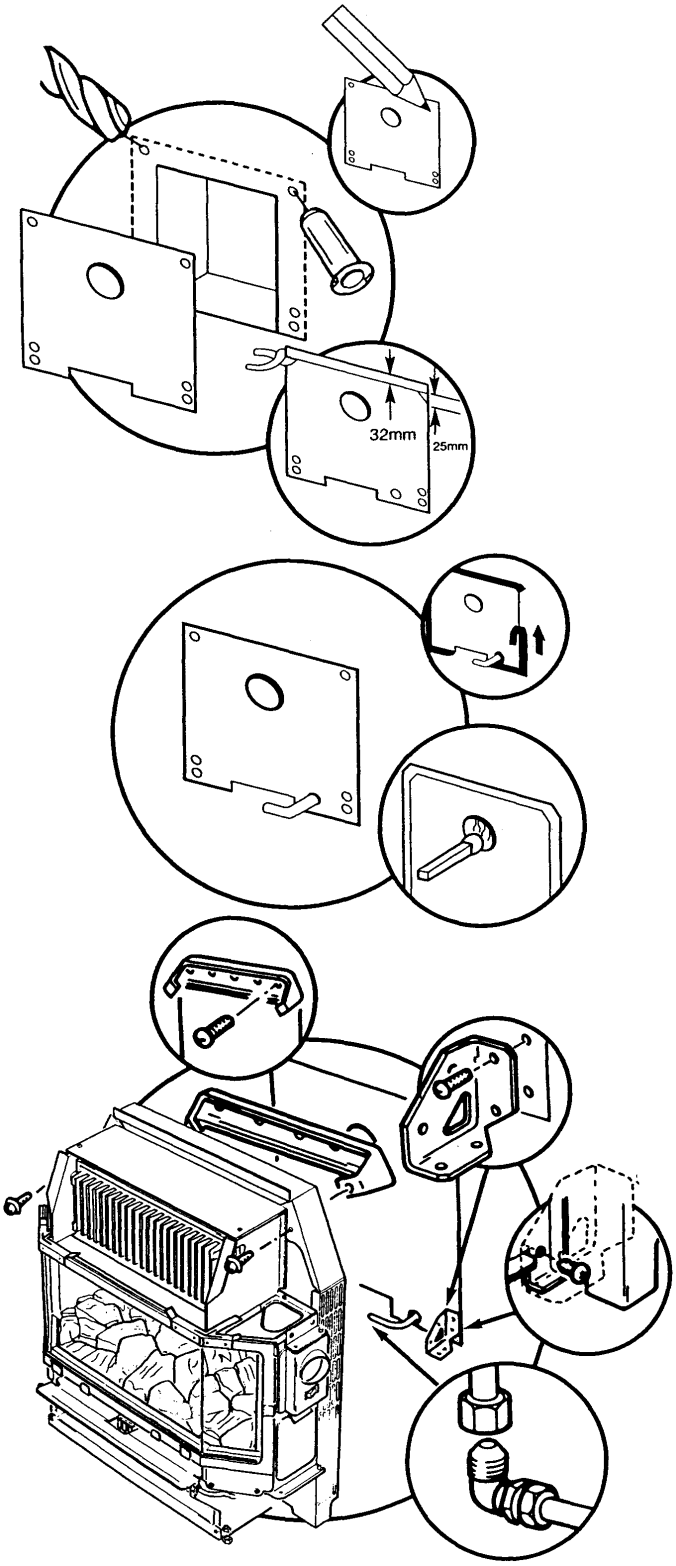

Wall Fixing

Using the closure plate supplied as a template, hold it centrally across the fireplace opening with the bottom edge level with the base of the fireplace opening. Mark out the six hole positions. Remove the closure plate and drill the fixing holes using a 6mm drill to accept the wall plugs provided.

NOTE: Where the closure plate is more than adequate to cover the fireplace opening and to prevent the sealing tape from becoming visible, it is advisable to trim the closure plate (after marking the fixing holes) as follows:- Cut 32mm (1¼in) off the top of the closure plate (i.e. through the centre line of the top two fixing holes) and then trim the top corners at an angle of 45° to a depth of 25mm (1in). If necessary, cut a hole in the closure plate for the gas supply pipe.

Replace the closure plate, making sure to line it up with the holes previously drilled and plugged and seal all edges with a suitable tape. DO NOT COVER THE AIR RELIEF OPENING IN ANY WAY.
If the closure plate has been cut for the gas supply pipe, seal around this opening too.

Hold a lighted taper or match to the spigot hole in the closure plate. If the flame is pulled into the opening, proceed with the installation. If the flame is NOT pulled into the opening, pre-heat the chimney for a few minutes then re-check for flue pull. If there is no definite flow into the spigot opening, the chimney may need attention.
DO NOT CONTINUE WITH THE INSTALLATION -SEEK EXPERT ASSISTANCE.

Take the backing plate from the fittings pack and fix it to the wall as shown using the 1½in wood screws provided.

Fix the two wall mounting brackets in position using the four 1½in wood screws provided.

Take the fire, two N° 8 x $^{5}/_{8}$in self tapping screws, screwdriver and locate the flue spigot in the hole in the closure plate, push the fire backwards as far as possible, ensuring that the rear feet locate positively on the wall mounting brackets. Whilst holding the fire in position, secure the fire to the backing plate with the screws.

Fix the fire firmly to the wall mounting brackets as shown using the two N° 8 x $^{5}/_{8}$in self tapping screws provided.

Make the gas connection to the union elbow and tighten the flared joint.

Electrical Connections - Page 9

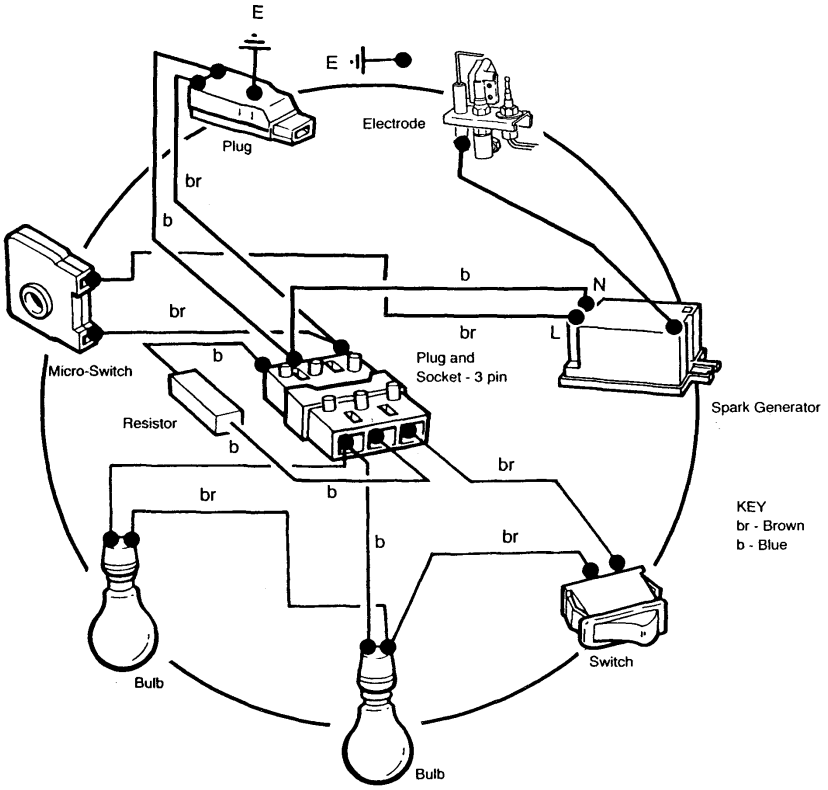

Electricity is supplied to the fire unit via the plug-and-cable assembly provided with the appliance.

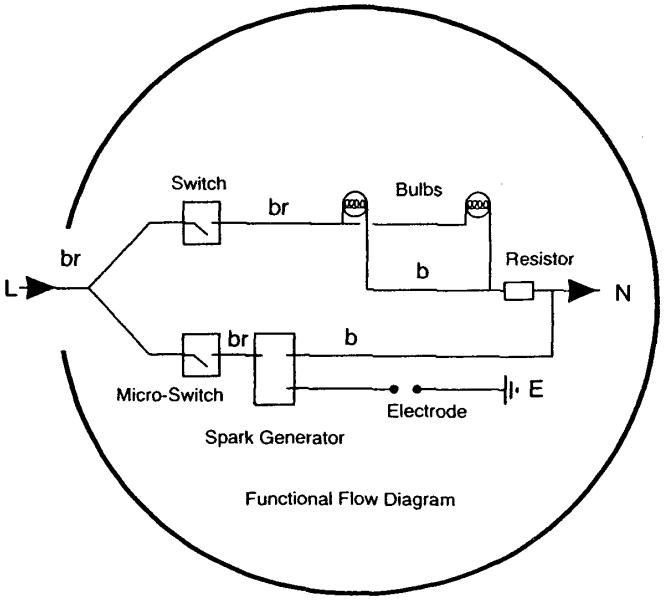

WARNING

THIS APPLIANCE MUST BE EARTHED. 3 core input cable for connection to the mains input must NOT be less than $0.5mm^2$ (16 x 0.2mm) PVC heat resistant to 70°C grade 1 to BS 6500 table 15 or 16.

COMMISSIONING THE FIRE - Page 10

Purge any air from the gas inlet and make good the gas connection. Switch on the gas. Check for gas soundness.

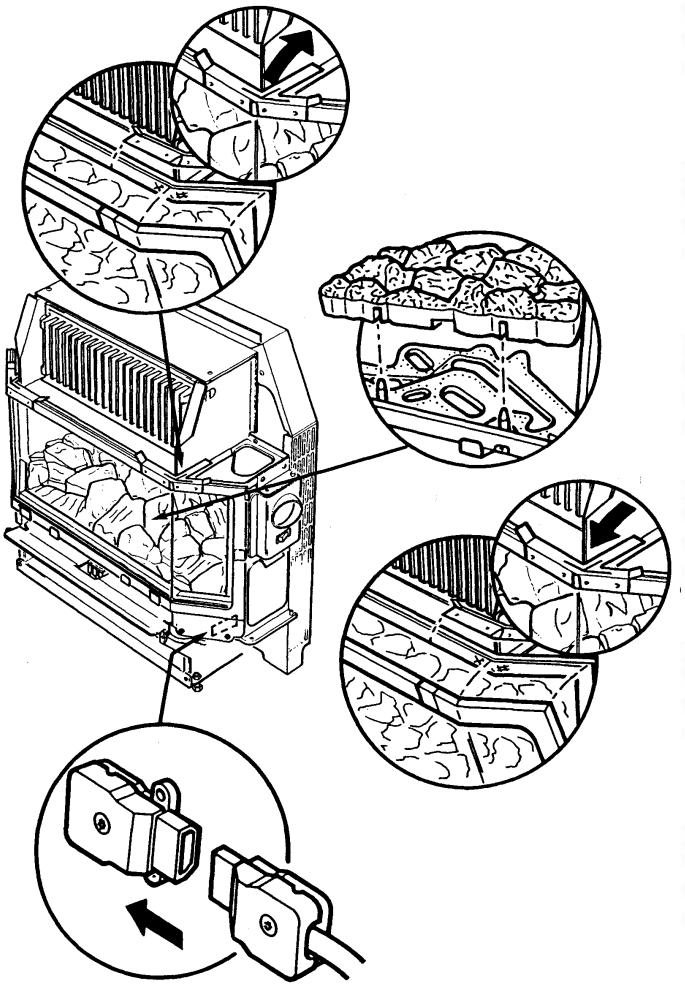

Remove the glass frame by disengaging the retaining clamps and lifting away. Remove the polystyrene packing piece securing the coal bed in position.

Remove the coal bed from its plastic bag and carefully replace in position on the burner.

CAUTION: The coal bed is extremely fragile and must be handled accordingly. Gloves should be worn and any inhalation of the dust should be avoided. Keep the coals away from children at all times. Please read the Important Information section on page 3.

Remove any labels fixed to the glass frame assembly and clean both sides of the glass panels before replacing the glass frame.

Replace the glass frame and lock in place by engaging the retaining clamps.

Take the lead provided and fit the plug into the socket on the fire. Connect to the electricity supply, taking care to route the cable so that it will not come into contact with any hot surface.

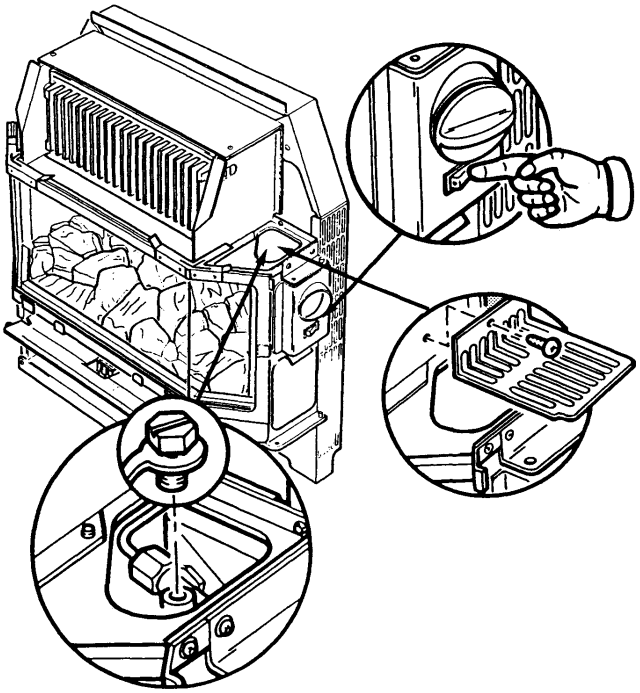

Check the electricity supply to the fire unit by switching on the illumination bulbs to the coal bed. If the bulbs light, switch off and continue with commissioning the fire. If the bulbs do not light, isolate the electricity supply and perform preliminary electrical system checks before proceeding i.e. earth continuity, polarity, resistance to earth etc.

Isolate the electricity supply.

Remove the electrical cover on the right hand side of the chassis as shown, by removing the fixing screw.

Release the pressure test point sealing screw and connect a pressure gauge in position.

Reconnect the electricity supply.

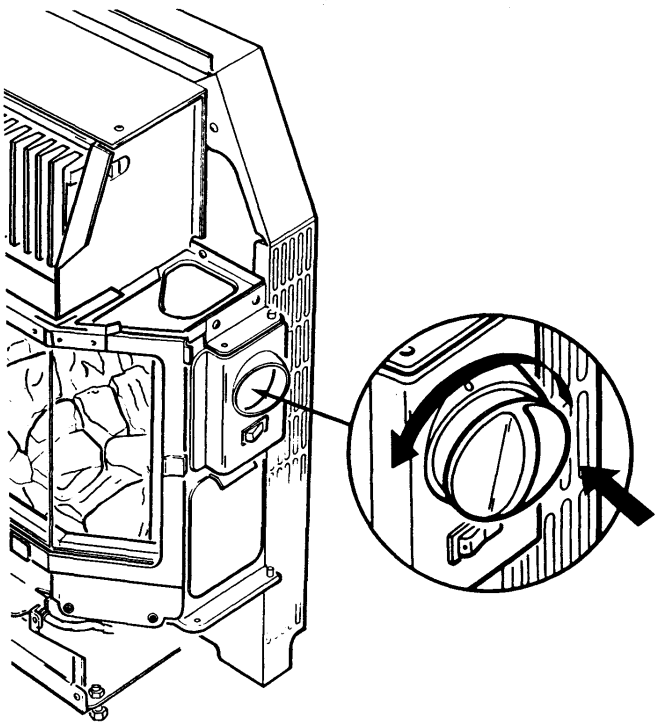

Push in the control knob, turn to the IGNITION position (★🔥) and hold in. Sparking will commence at the ignition electrode and the pilot will ignite.

Continue to hold the control knob in for a further 15 seconds then release. The sparking will stop and the pilot will stay alight. If the pilot does not stay alight, repeat the process after waiting for 3 minutes. (If the pilot still fails to remain alight, refer to the fault finding chart).

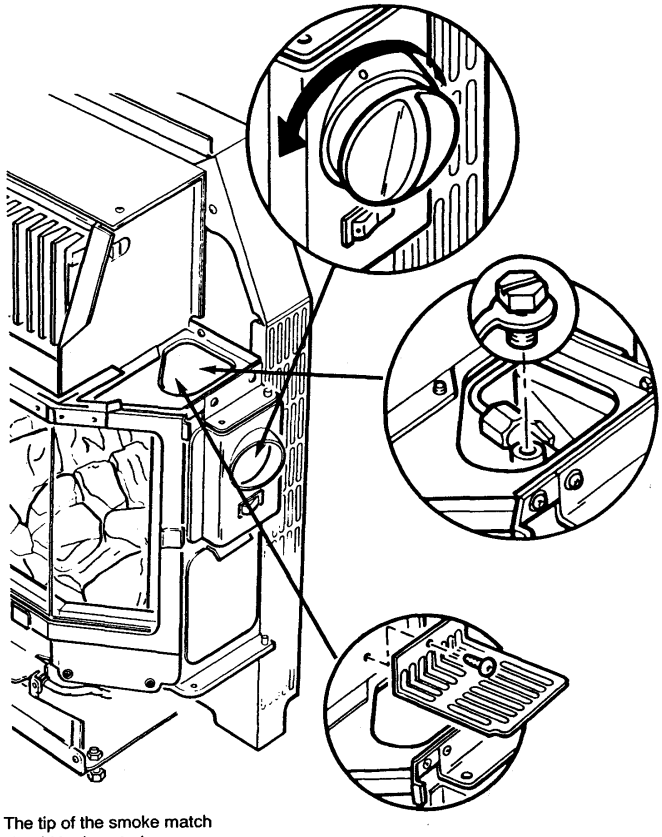

Turn the control knob slowly to position 4, looking for complete cross-lighting of the burner.

Check the setting pressure at position 4. No adjustment to the setting pressure is possible.
(See Technical Data).

Turn the control knob to the 'OFF' (●)position.

Isolate the electricity supply.

Disconnect the pressure gauge, taking care not to touch any hot surfaces and replace the pressure test point sealing screw, ensuring a gas-tight seal.

Refit the electrical cover and reconnect the electricity supply.

The tip of the smoke match should be inserted approx 100mm from the outer edge of the downdraught diverter.

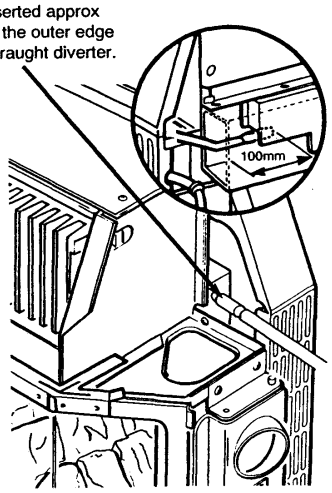

SPILLAGE DETECTION

Check that the fire is fitted correctly.

Ensure that all the doors and windows in the room are closed.

IMPORTANT NOTE: If there is an extractor or ceiling fan in the room or any adjoining room, the check for spillage must be performed with the fan turned on and any interconnecting doors open.

Light the fire, turn to the full rate and leave for 5 minutes.

The fire should be checked visually for clearance of products. Fit a lighted smoked match in a suitable holder and position it in the downdraught diverter at either side of the fire. Ensure that the majority of the smoke is drawn into the chimney.

If there is any doubt, repeat the test after a further 10 minutes.

If there is any indication of spillage then the chimney may be faulty. The cause of the fault must be identified and corrected before the installation can proceed.

IF THE FAULT CANNOT BE RECTIFIED, TURN OFF AND DISCONNECT THE GAS SUPPLY TO THE FIRE. SEEK EXPERT ADVICE.

FITTING THE OUTER CASE - Page 13

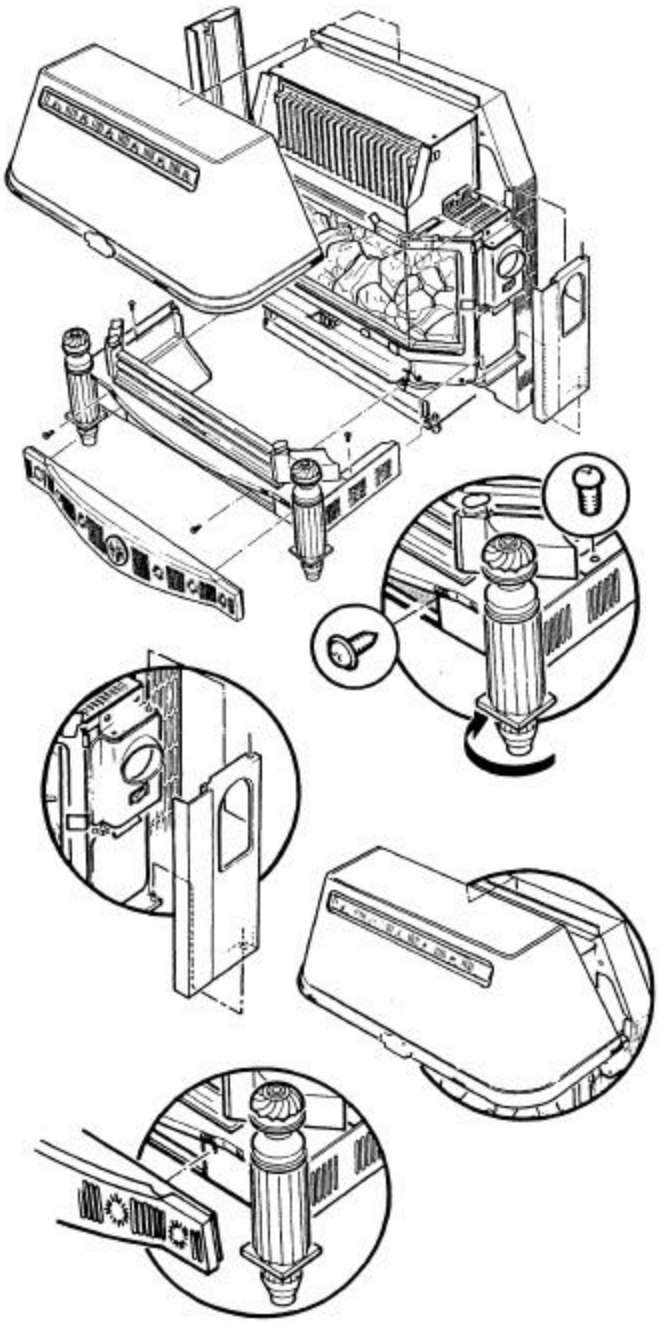

Baxi Baroque Super

Turn off the fire and fit the outer case components as follows:

Remove the fender front from the hearth assembly by pulling forward.

Engage the hearth assembly on the side ledges as shown and push home as far as possible. Adjust the feet to touch the fireplace hearth. Fix the hearth assembly in position using the two N° 8 x $^{5}/_{8}$in screws in the front and the two M4 x 8mm thread former screws in the sides.

Hang the left and right hand side doors on the fittings as shown and close the doors, ensuring that they lock in position.

Fix the canopy by lowering it into position over the top edge and then by gently easing the sides inwards, push home to lock in place.

Locate the fender front in position at the front of the hearth assembly and push home.

Instruct the user in the operation of the fire controls and hand over the user's instructions and installation instructions, **giving advice on the necessity of regular servicing.**

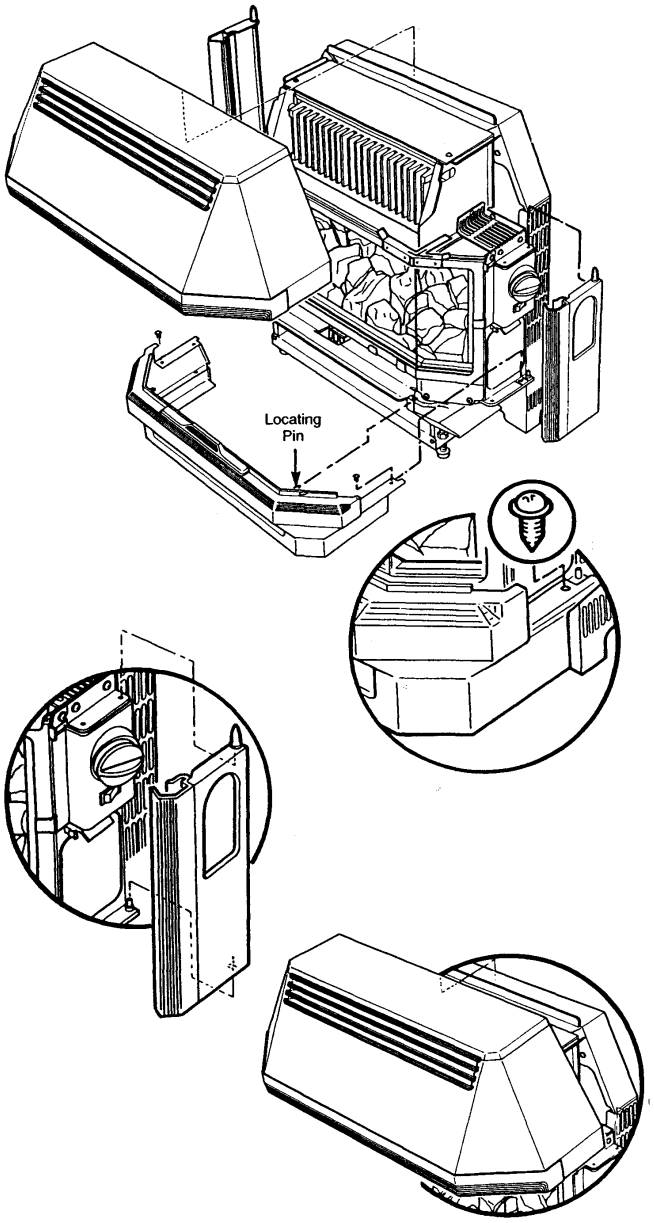

Baxi Arena Super

Turn off the fire and fit the outer case components as follows:

Engage the hearth by guiding the locating pins through the holes in the innercase and sliding forward on the side ledges as far as possible. Fix the hearth in position using the two $^{3}/_{8}$in screws in the sides.

Hang the left and right hand side doors on the fittings as shown leaving them open.

Fix the canopy by guiding the bottom edge onto the door pins and then by tilting the back edge over the locating lip on the innercase. Close the doors ensuring they lock in place.

Instruct the user in the operation of the fire controls and hand over the user's instructions and installation instructions, **giving advice on the necessity of regular servicing.**

ANNUAL SERVICING - Page 15

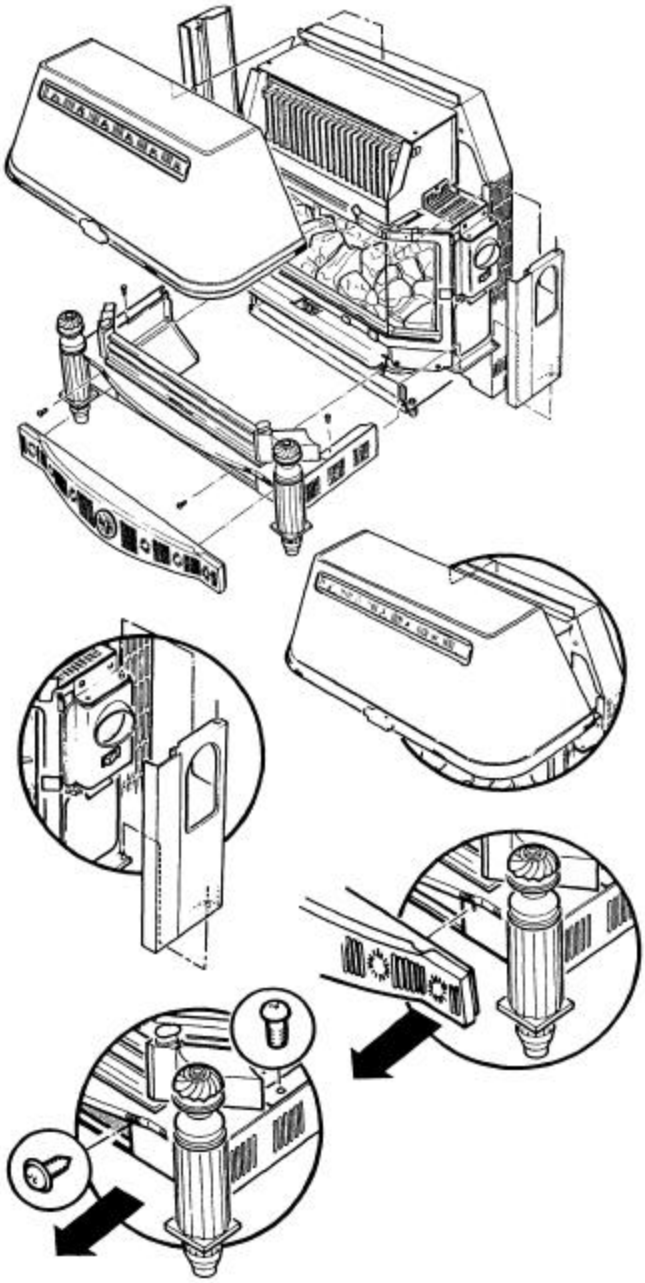

Baxi Baroque Super

IMPORTANT: *Always check for gas soundness before and after servicing the fire particularly gas carrying joints which may have been disturbed. At least once a year remove the fire and check behind the closure plate for any accumulation of rubble. Reseal the four edges of the closure plate and any opening between the closure plate and any rear entrance gas supply but ensure that the ventilation hole at the bottom of the closure plate is not covered. Before servicing please read the Important section on page 3.*

For economy and safety reasons, it is important to service the fire annually.

NOTE: Before attempting to service the appliance, ensure that the fire is COLD.

All Electrical Servicing MUST comply with 'THE ELECTRICITY AT WORK REGULATIONS 1989'.

Important: It is possible that some soot may be deposited on the coals after use. This is acceptable providing it is not allowed to accumulate.

CAUTION: The coal bed is extremely fragile and must be handled accordingly. Gloves should be worn and any inhalation of the dust should be avoided.
Keep the coals away from children at all times.

ISOLATE THE ELECTRICITY SUPPLY TO THE FIRE

Remove the canopy by gently easing the sides inwards and pulling the bottom edge forward, then lift the canopy upwards and away from the locating lip.

Remove the left and right hand side doors firstly by opening them and then lifting away from their mountings.

Remove the fender front by forward.

Remove the hearth assembly by removing the fixing screws and sliding it forward and away from the chassis.

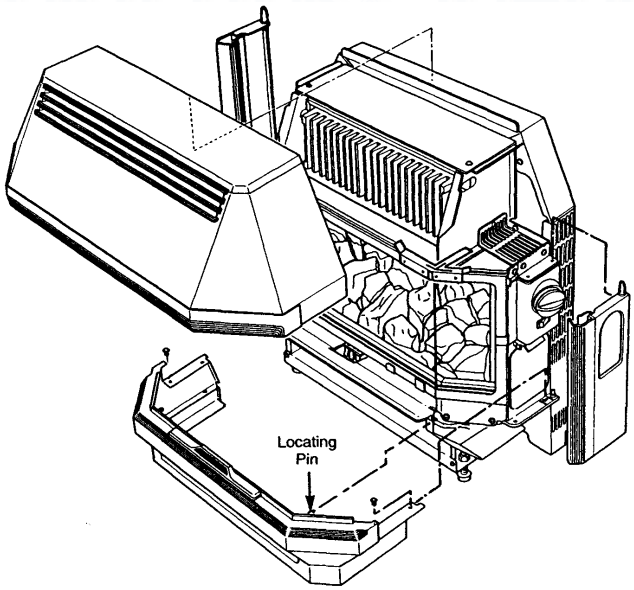

Baxi Arena Super

IMPORTANT: *Always check for gas soundness before and after servicing the fire particularly gas carrying joints which may have been disturbed. At least once a year remove the fire and check behind the closure plate for any accumulation of rubble. Reseal the four edges of the closure plate and any opening between the closure plate and any rear entrance gas supply but ensure that the ventilation hole at the bottom of the closure plate is not covered. Before servicing please read the Important Information section on page 3.*

For economy and safety reasons, it is important to service the fire annually.

NOTE: Before attempting to service the appliance, ensure that the fire is COLD.

All Electrical Servicing MUST comply with 'THE ELECTRICITY AT WORK REGULATIONS 1989'.

Important: It is possible that some soot may be deposited on the coals after use. This is acceptable providing it is not allowed to accumulate.

CAUTION: The coal bed is extremely fragile and must be handled accordingly. Gloves should be worn and any inhalation of the dust should be avoided. Keep the coals away from children at all times.

ISOLATE THE ELECTRICITY SUPPLY TO THE FIRE

Remove the canopy, firstly by opening the left and right hand side doors, then lift the canopy by the bottom edge upwards and away from the locating lip.

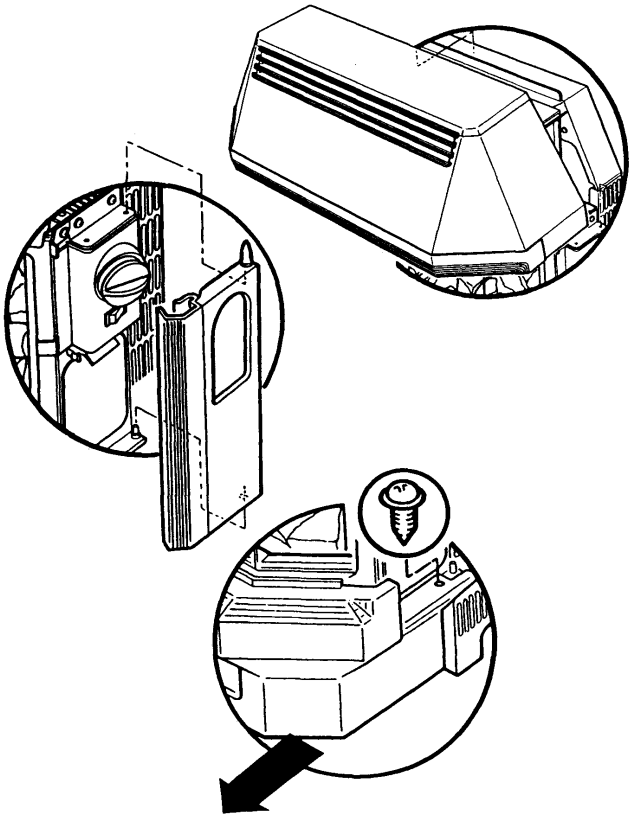

Remove the left and right hand side doors by lifting away from their mountings.

Remove the hearth by removing the fixing screws and sliding the hearth assembly forward and away from the chassis.

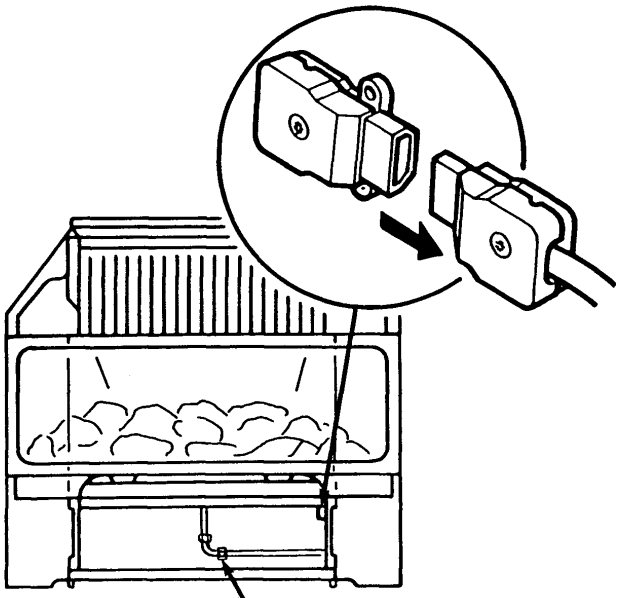

Disconnect the 3-pin plug from the socket beneath the fire.

Isolate the gas supply.

Disconnect the fire inlet pipe from the fire inlet.

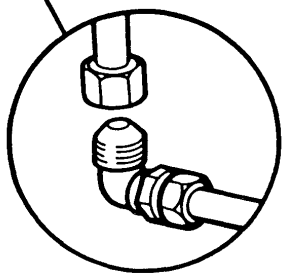

HEARTH MOUNTING

Pull the fire forward until the flue spigot is clear of the closure plate and lift away.

Inspect the fireplace for damage and blockages.

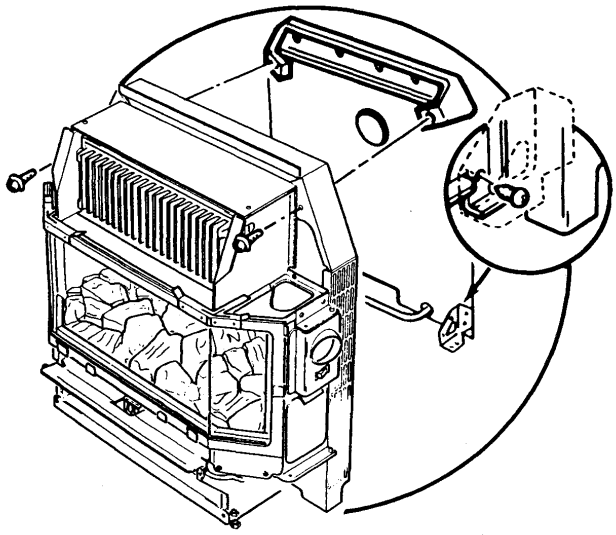

WALL FIXING

Remove and retain the screws securing the fire to the wall mounting brackets.

Whilst holding the fire in position, remove and retain the screws securing the fire to the backing plate. Pull the fire forward until the flue spigot is clear of the closure plate and lift away.

Inspect the fireplace for damage and blockages.

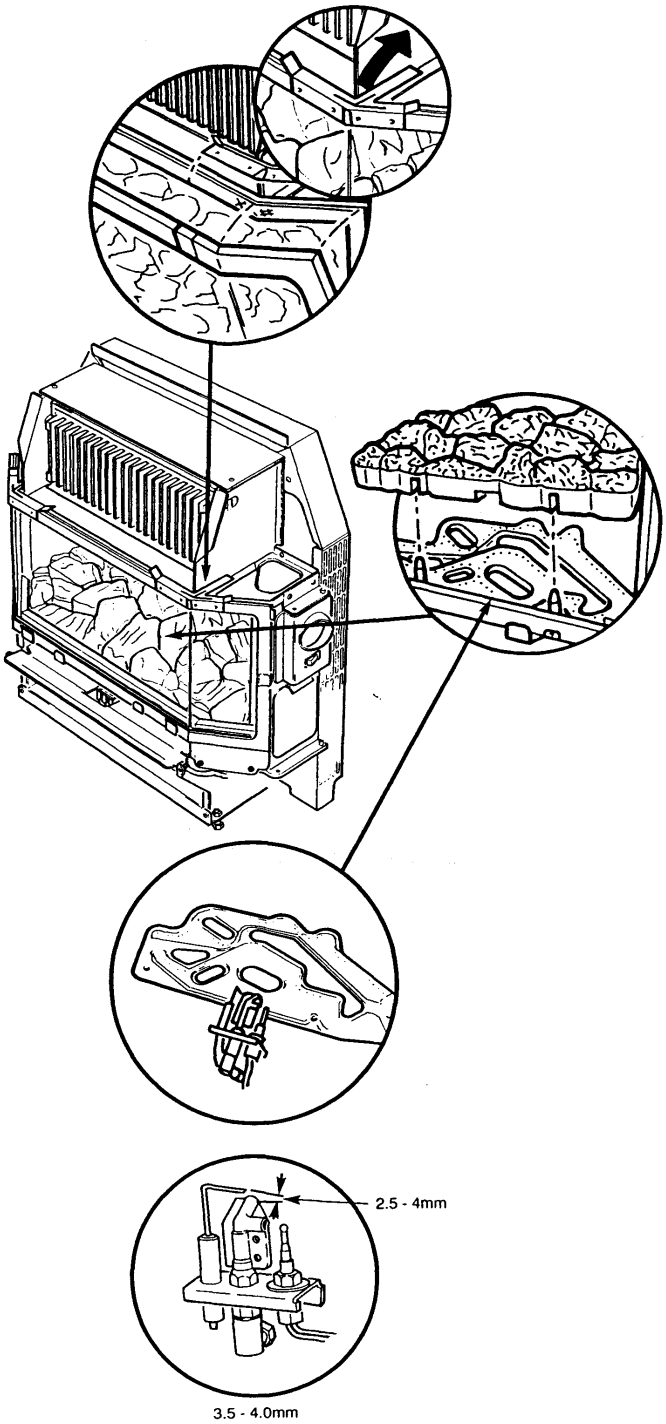

Ensuring that the glass frame is cold, disengage the retaining clamps and lift the frame away.

Remove the coal bed by carefully lifting away from the locating pins and place to one side.

Cleaning the Pilot, Electrode & Thermocouple Assembly

Examine and clean the electrode and thermocouple, ensuring that the gap between electrode and target is 2.5 - 4.0mm.

Ensure that the pilot burner aeration hole is free from lint, debris etc.

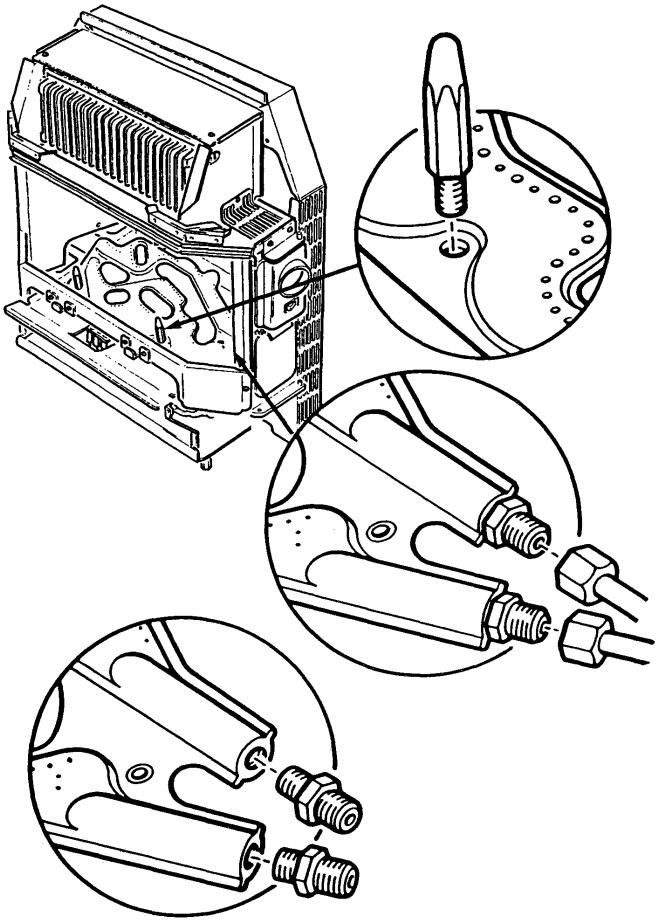

Cleaning the Burner / Injectors

Remove the burner as follows:

Remove the locating pins (these also secure the burner to its support brackets).

Disconnect the compression nuts from the injectors. Remove the burner from the fire.

Using a soft brush remove any dirt or debris from the top of the burner and ensure that the ports and aeration openings are free from obstruction.

Release and remove the injectors from the burner. Examine and clean carefully then replace with the flat end of the injector in the burner.

BEFORE RE-ASSEMBLING ALL COMPONENTS

Examine the glass frame, if the glass is in any way damaged, then it must be replaced.

NOTE: This is a heat resistant glass and must not be replaced by “ordinary” glass.

The glass may be cleaned with a cream cleansing agent if required.

Examine the glass frame sealing rope on the fire and replace it if in any way damaged.

Examine the coal bed and replace it if any major damage has occurred.

Re-assemble all components in reverse order, ensuring that the flue spigot is engaged into the hole in the closure plate. Make good all gas and electrical connections and check for gas soundness.

Recommission the fire before use, then re-assemble the outer components in the reverse order of dismantling.

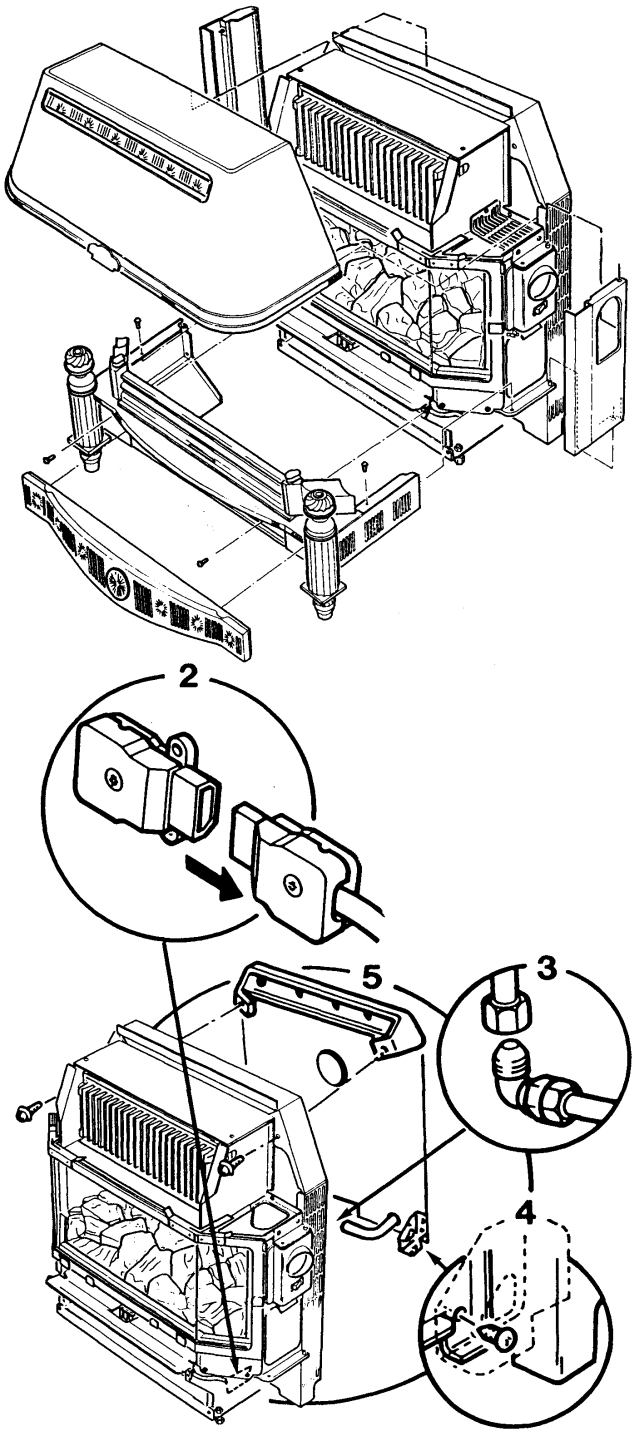

Baxi Baroque Super

When changing components ensure that the gas and electricity supplies are isolated before the work is started. Before changing any components please read the Important Information section on page 3.

To change the GLASS FRAME, FRAME SEALING ROPE, COAL BED, BURNER, INJECTORS and LIGHT SWITCH, remove the canopy and side doors as shown.

To change a LIGHT BULB refer to the User's Instructions for this appliance.

To change the ELECTRODE LEAD, SPARK GENERATOR and RESISTOR, remove the canopy, side doors, fender front and hearth assembly as shown.

To change the CONTROL TAP, PILOT / ELECTRODE / THERMOCOUPLE ASSEMBLY, ELECTRO-MAGNETIC UNIT and MICRO-SWITCH, remove the canopy, side door, electrical cover, fender front and hearth assembly. The fire must then be disconnected from the gas supply and removed from the fire place to give access to the rear of the unit as follows:

1. Isolate the gas supply.

2. Disconnect the 3-pin plug from the socket beneath the fire.

3. Disconnect the inlet pipe from the fire inlet.

HEARTH MOUNTING

Pull the fire forward until the flue spigot is clear of the closure plate and lift away.

WALL FIXING

4. Remove and retain the screws securing the fire to the wall mounting brackets.

5. Whilst holding the fire in position, remove and retain the screws securing the fire to the backing plate.

Pull the fire forward until the flue spigot is clear of the closure plate and lift away.

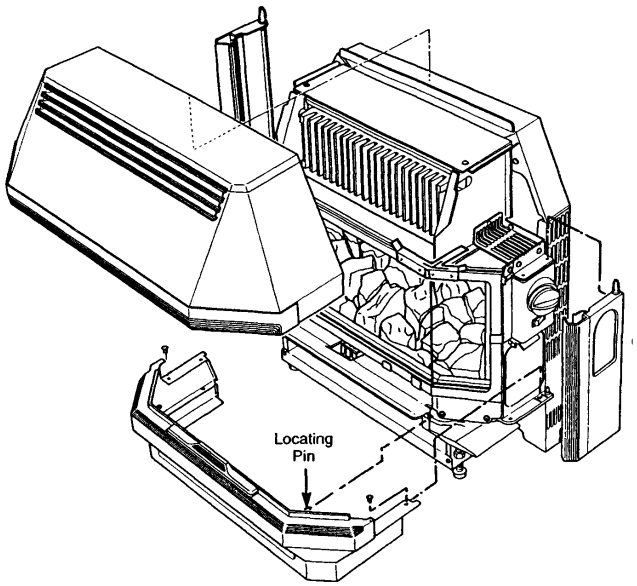

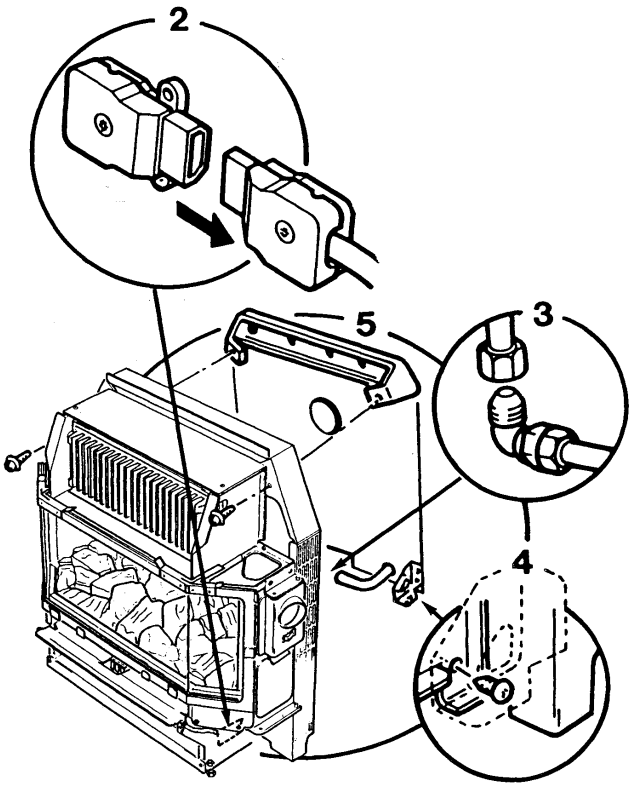

Baxi Arena Super

When changing components ensure that the gas and electricity supplies are isolated before the work is started. Before changing any components please read the Important Information section on page 3.

To change the GLASS FRAME, FRAME SEALING ROPE, COAL BED, BURNER, INJECTORS and LIGHT SWITCH, remove the canopy and side doors as shown.

To change a LIGHT BULB refer to the User's Instructions for this appliance.

To change the ELECTRODE LEAD, SPARK GENERATOR and RESISTOR, remove the canopy, side doors and hearth as shown.

To change the CONTROL TAP, PILOT / ELECTRODE / THERMOCOUPLE ASSEMBLY, ELECTRO-MAGNETIC UNIT and MICRO-SWITCH, remove the canopy, side door hearth and electrical cover. The fire must then be disconnected from the gas supply and removed from the fire place to give access to the rear of the unit as follows:

1. Isolate the gas supply.

2. Disconnect the 3-pin plug from the socket beneath the fire.

3. Disconnect the inlet pipe from the fire inlet.

HEARTH MOUNTING

Pull the fire forward until the flue spigot is clear of the closure plate and lift away.

WALL FIXING

4. Remove and retain the screws securing the fire to the wall mounting brackets.

5. Whilst holding the fire in position, remove and retain the screws securing the fire to the backing plate.

Pull the fire forward until the flue spigot is clear of the closure plate and lift away.

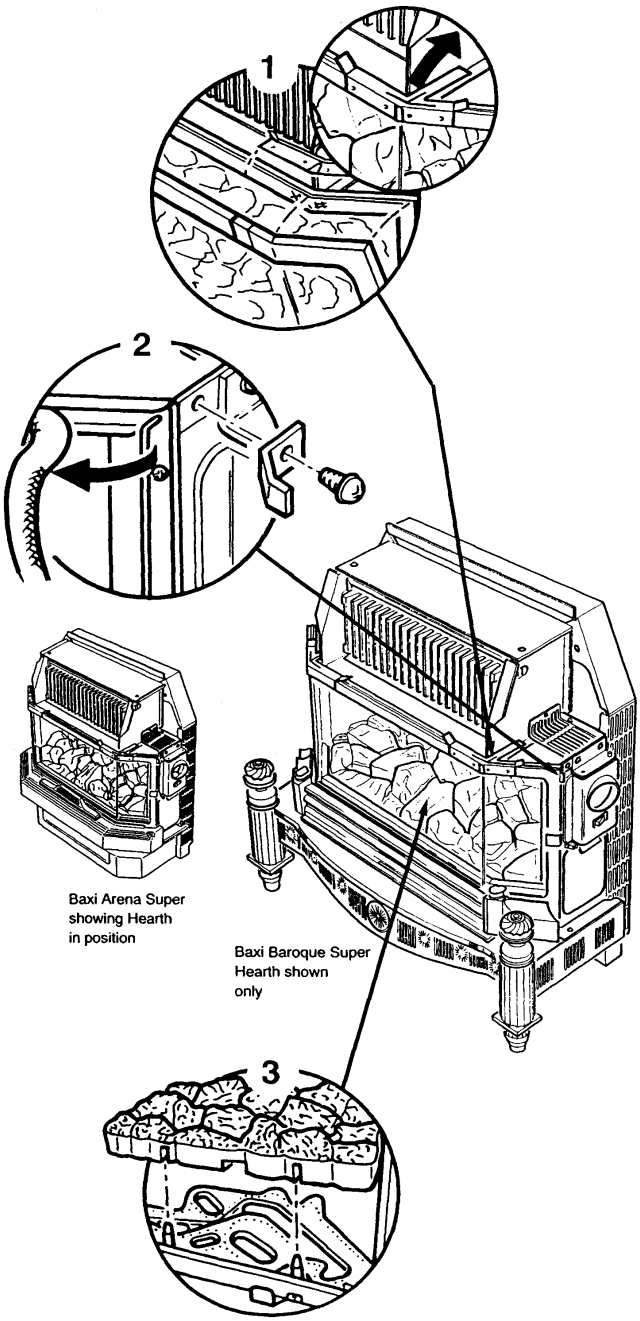

Glass Frame

1. Ensure that the glass panel is cold. Disengage the retaining clamps.

Lift the frame away.

Fix the new glass frame in position and engage the retaining clamps. Re-assemble the components in the reverse order to dismantling.

Frame Sealing Rope

1. Ensure that the glass panel is cold. Disengage the retaining clamps.

2. Pull the old rope seal out of the locating channel and release the glass locating brackets.

Fit the new seal, starting at the centre, tuck well into the locating channel. Ensure that there is an equal amount of seal free at either end of the channel. Secure the glass locating brackets.

Fix the glass frame in position and engage the retaining clamps. Re-assemble the components in the reverse order to dismantling.

Check that the seal between the rope and the glass frame is good.

Coal Bed

1. Ensure that the glass panel is cold. Disengage the retaining clamps.

Lift the frame away.

3. Lift the coal bed away from the locating pins.

CAUTION: The coal bed is extremely fragile and must be handled accordingly. Gloves should be worn and any inhalation of the dust should be avoided. Keep the coals away from children at all times.

Carefully fit the new coal bed in position on the locating pins. Fix the glass frame in position and engage the retaining clamps. Re-assemble the components in the reverse order to dismantling.

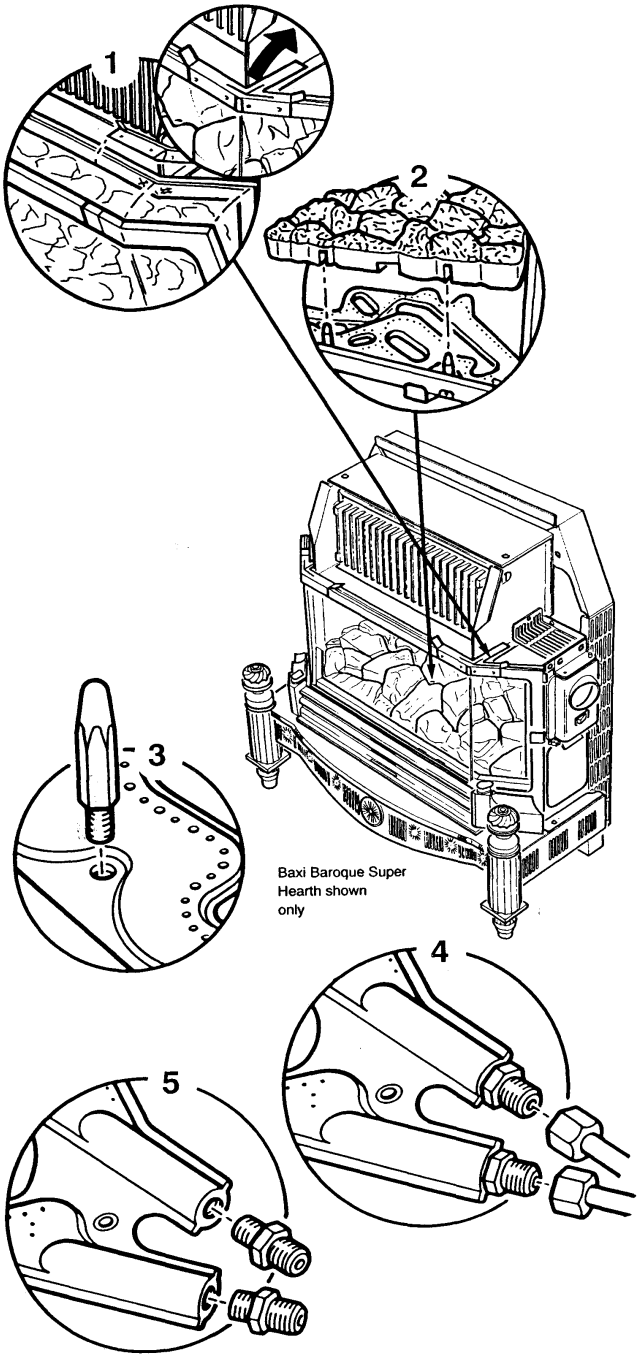

Burner and Injectors

1. Ensure that the glass panel is cold.
Disengage the retaining clamps and lift the frame away.

2. Lift the coal bed away from the locating pins and place to one side.

3. Remove the locating pins securing the burner to its support brackets.

4. Disconnect the compression nuts from the injectors and remove the burner, being careful not to damage the pilot assembly.

5. Remove the injectors from the old burner and fit them into the new burner or if required fit new injectors (flat end in the burner) taking care not to over tighten them in their mountings.

Re-assemble the components in the reverse order to dismantling.

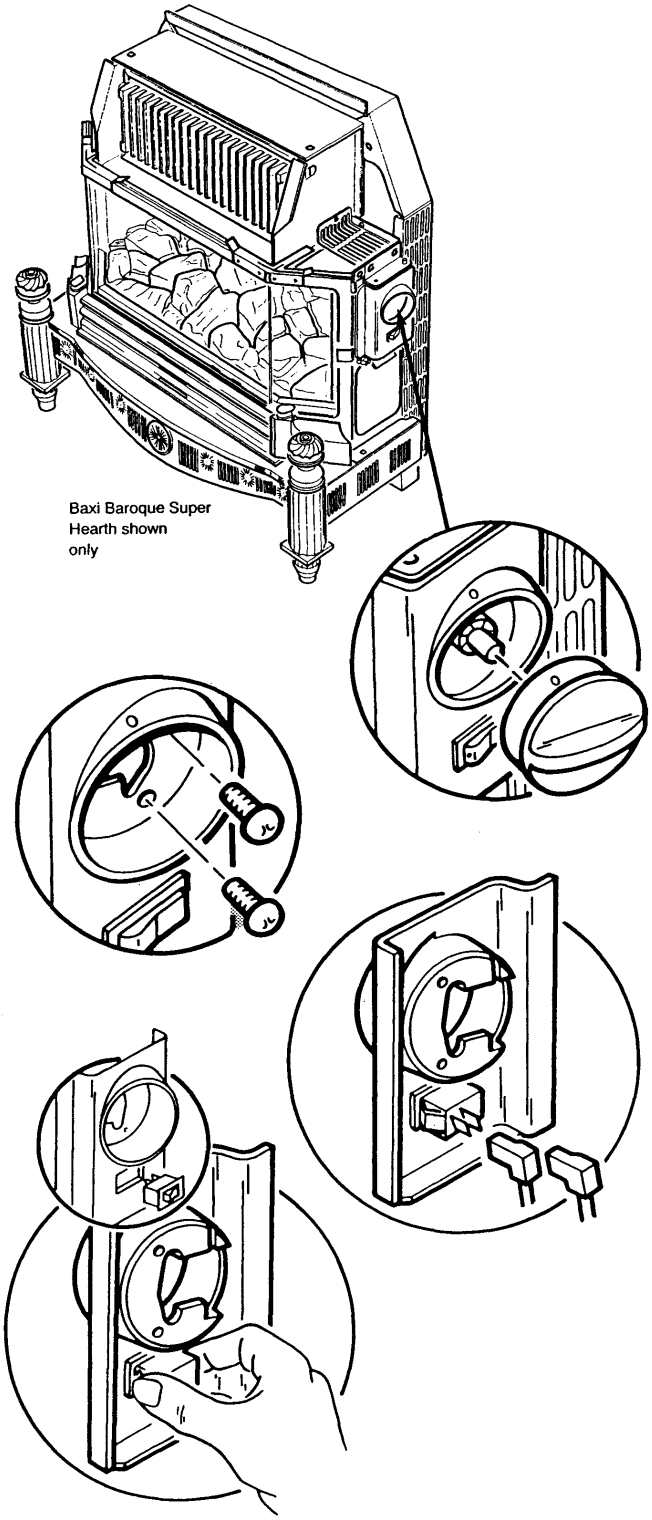

Light Switch

Ensure that the electricity supply to the fire unit is isolated.

Remove the control knob by pulling from the spindle.

Remove the two screws holding the bezel in place.

Note the orientation of the two electrical connections and disconnect from the switch. Remove the bezel.

Press together the retaining arms on the rear of the switch and remove from the bezel.

Fit the new switch in place, ensure that the orientation of the switch is correct. (i.e. with the ‘O’ symbol towards the front of the fire.) and make good the electrical connections.

Re-assemble the components in the reverse order to dismantling.

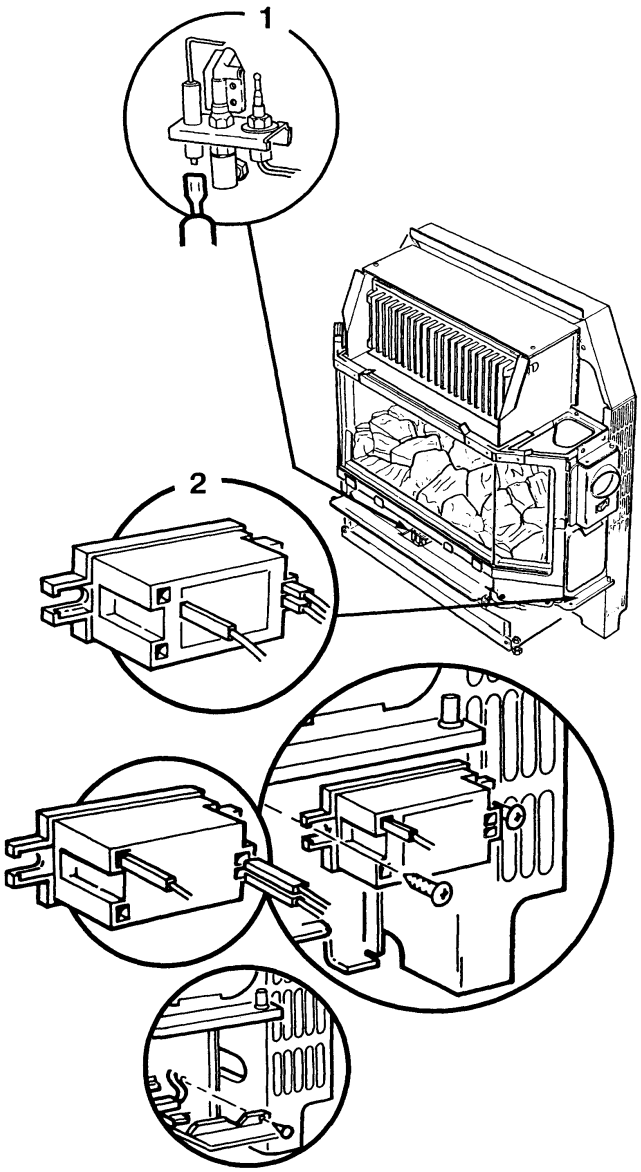

Electrode Lead

1. Remove the insulating sleeve from the body of the electrode. Disconnect the electrode lead from the electrode.

2. Disconnect the electrode lead from the spark generator.

Undo the screw holding the orange panel to the chassis. Lift the panel upwards and withdraw the sleeve and lead.

Thread the new electrode lead through the insulating sleeve. Fit the new electrode lead to the spark generator and electrode.

Re-assemble the components in the reverse order to dismantling.

Spark Generator

Remove the front screw holding the spark generator in place, and release the rear screw, enabling the generator to be removed. Disconnect the electrical connections and electrode lead.

Fit the new spark generator and re-assemble all components in the reverse order to dismantling.

Resistor

Remove the two screws securing the light shield bracket.
Unclip the resistor from the side frame.
Disconnect the two resistor wires from terminal strip.
Replace resistor and refit in reverse order.

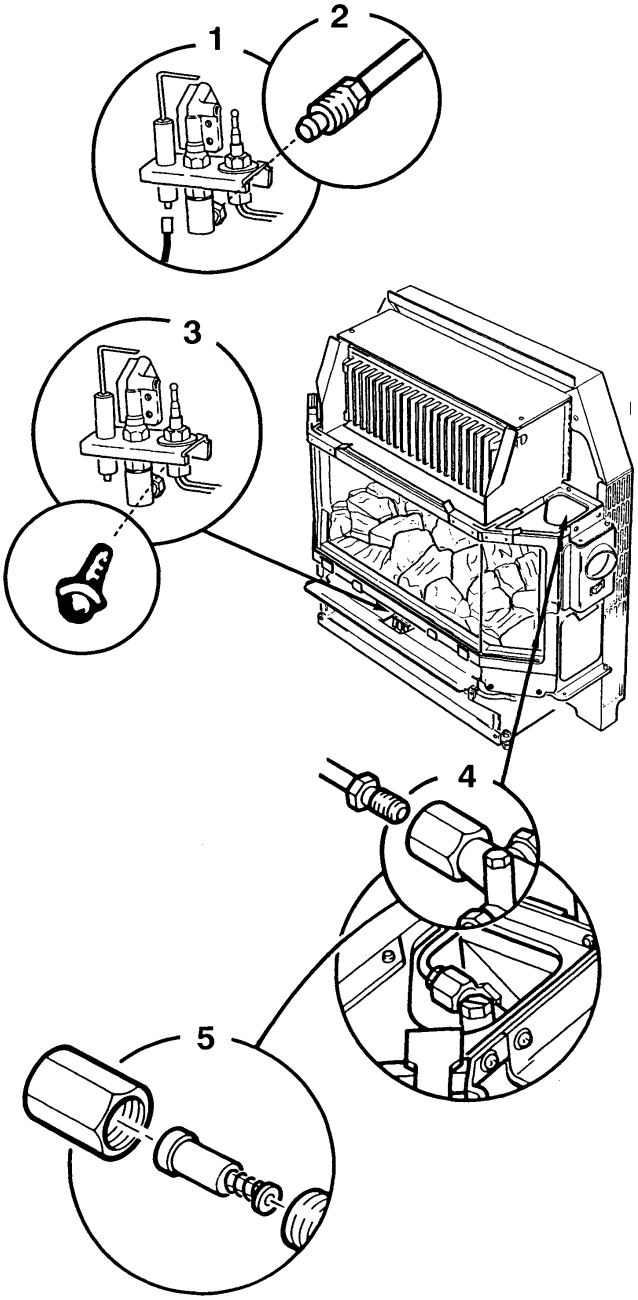

Pilot, Electrode & Thermocouple Assy

Note: The thermocouple cannot be changed as an individual component. The complete assembly must be changed in the event of one or other component failure(s).

1. Remove the lead from the electrode.

2. Undo the pilot feed pipe from the assembly.

4. Undo the thermocouple from the gas tap.

3. Remove the screws holding the pilot assembly bracket to the fire chassis. Unclip the thermocouple from the fire chassis. Withdraw the pilot assembly and bracket.

Remove the screw holding the assembly to the bracket.

Re-assemble all components in the reverse order to dismantling.

Electro-Magnetic Unit

4. Release the thermocouple from the control tap by unscrewing the retaining nut.

5. Release the Electro-Magnetic Unit retaining nut and remove the unit from the control tap.
Fit the new Electro-Magnetic Unit and replace the retaining nut.

Fix the thermocouple in position taking care not to overtighten the retaining nut. Re-assemble all components in reverse order to dismantling.

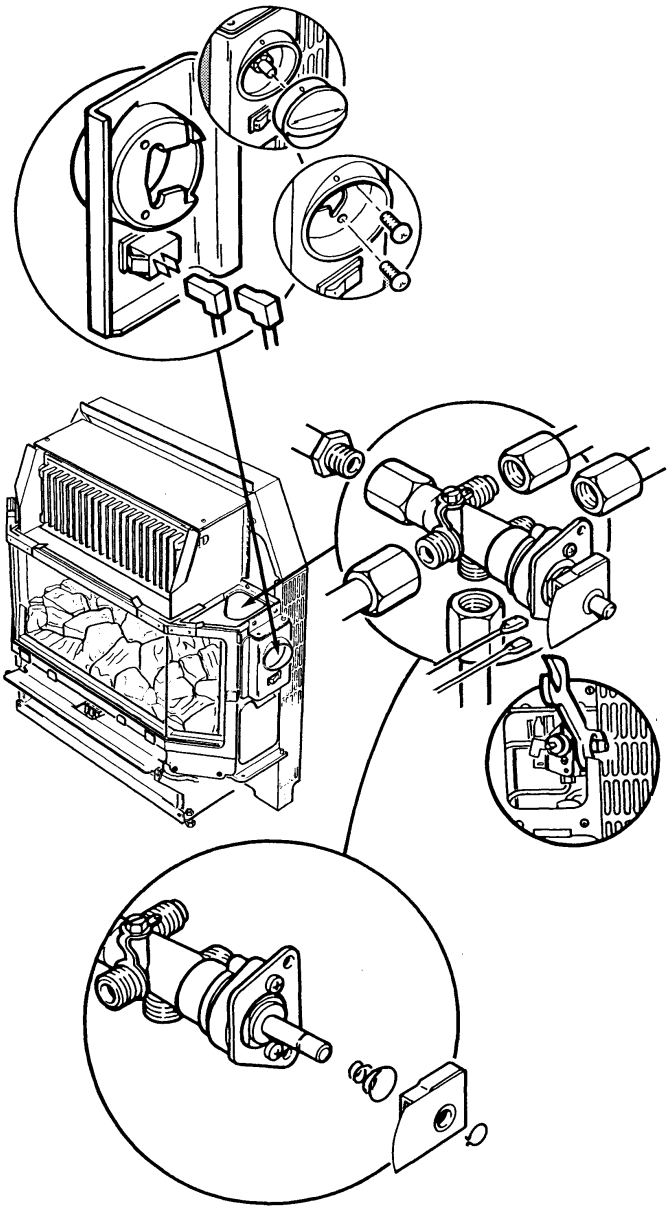

Control Tap and Micro-Switch

Remove the control knob by pulling from the spindle.

Remove the two screws holding the bezel in place.

Disconnect the two electrical connections from the light switch, taking note of their orientation. Remove the bezel.

Release the thermocouple from the control tap by unscrewing the retaining nut.

Disconnect the two electrical connections from the micro switch.

Release the nut-and-olive connections on the control tap body and disconnect the bundy tubing from the control tap.

Disconnect the gas inlet at the control tap by releasing the compression fitting.

Release the locknut fixing the control tap to the chassis. Access to the locknut may be gained through the bezel location.

Withdraw the control tap from the fire.

At this point change the micro-switch if required by removing the circlip holding it in position on the control tap.

Fit the new micro-switch or the new control tap in reverse order.

Make good all gas and electrical connections. Temporarily reconnect electricity supply. Light the fire, turn off the electricity supply and check all joints for gas soundness. Turn the fire off. Re-assemble all components in reverse order to dismantling.

FAULT FINDING - Page 28 and 29

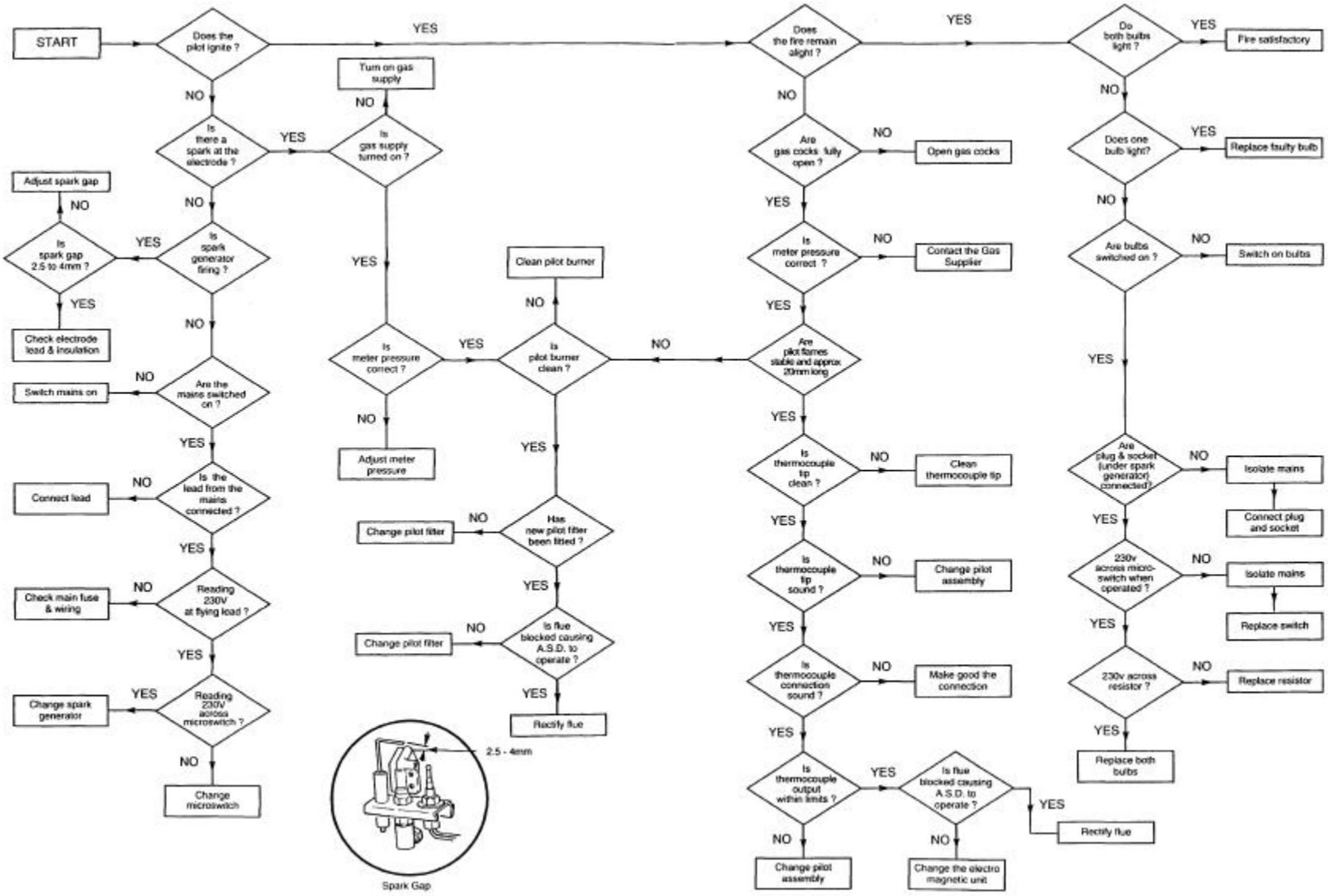

SHORT PARTS LIST - Page 30

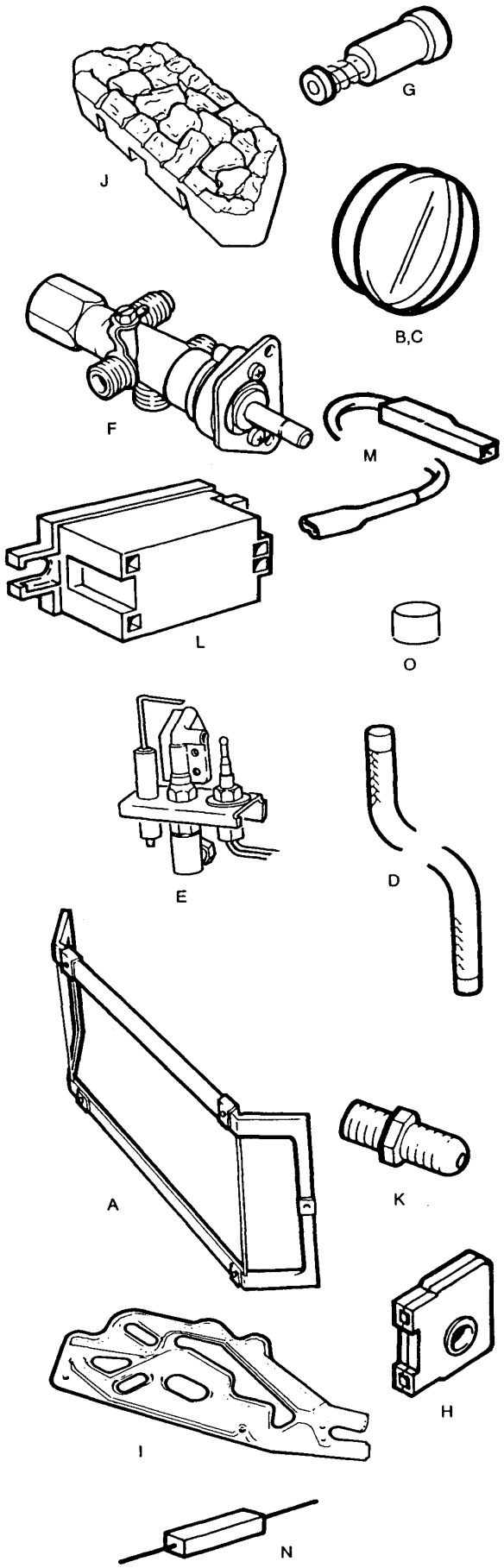

Key No.	G.C. No.	Description	Manufacturers Part No.
A	156 036	Glass and Frame Assy	225391
B	156 431	Knob Control - Baroque	236394
C	156 233	Knob Control - Arena	233466
D	156 063	Seal Frame Glass Rope	226876
E	378 912	Oxy-pilot Assembly	235601
F	156 300	Gas Tap	234098
G	E01 617	Electro Magnetic Unit	239413
H	156 095	Micro Switch Assy	227761
I	156 094	Burner	225400
J	156 432	Coal Bed	236103
K	397 681	Injector Burner FO3 (2 off)	227348
L	156 230	Spark Generator Kit	232804
M	378 916	Electrode Lead	236184
N	386 129	Resistor 68 Ù	228955
0	205 723	Pilot Filter	082412

Baxi Limited is one of the leading manufacturers of domestic heating products in the U.K.

Our first priority is to give a high quality service to our customers. Quality is built into every Baxi product - products which fulfil the demands and needs of customers, offering choice, efficiency and reliability.

To keep ahead of changing trends, we have made a commitment to develop new ideas using the latest technology - with the aim of continuing to make the products that customers want to buy.

Baxi is also the largest manufacturing partnership in the country. Everyone who works at the company has a commitment to quality because, as shareholders, we know that satisfied customers mean continued success.

We hope you get a satisfactory service from Baxi. If not, please let us know.

Baxi is a BS - EN ISO 9001 Accredited Company

Click here for Helplines