Baxi Bermuda 45/4 & 57/4 Boilers

Gas Fired Central Heating Unit

Gas Type G20 (Natural Gas)

Comp N° 241794 - Iss 9 - 6/00

Baxi Bermuda 45/4 M	-	**G.C.N°** 44 077 71
Baxi Bermuda 57/4 M	-	**G.C.N°** 44 077 72
Baxi Bermuda 45/4 E	-	**G.C.N°** 44 077 73
Baxi Bermuda 57/4 E	-	**G.C.N°** 44 077 74

These Instructions must be read in conjunction with those for the separate Firefront.

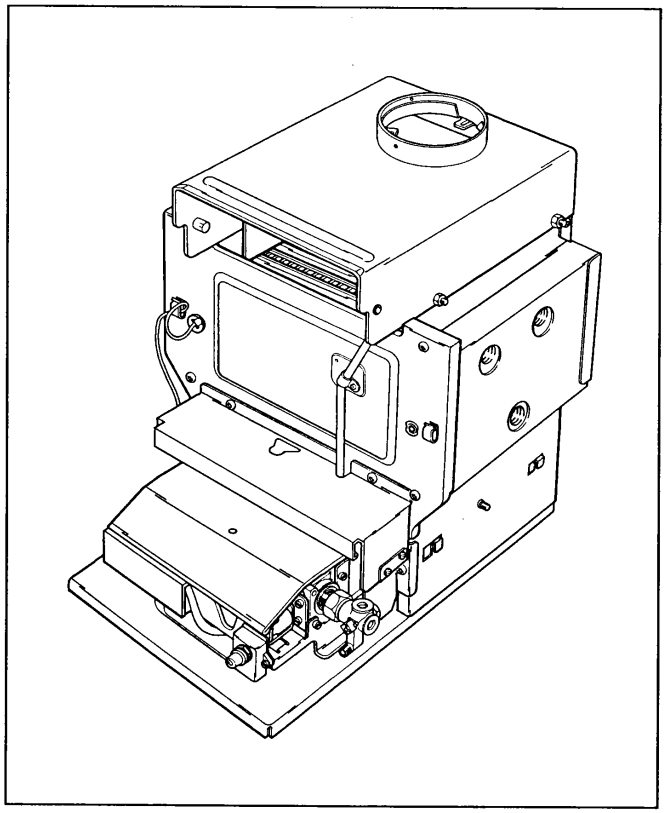

Installation And Servicing Instructions

BAXI

spares & parts online IBASIS.CO.UK

Natural Gas

Baxi Bermuda 45/4 M
G.C.No. 44 077 71

Baxi Bermuda 57/4 M
G.C.No. 44 077 72

Baxi Bermuda 45/4 E
G.C.No. 44 077 73

Baxi Bermuda 57/4 E
G.C.No. 44 077 74

These Instructions must be read in conjunction with those for the separate Firefront.

Baxi UK Limited is one of the leading manufacturers of domestic heating products in the UK.

Our first priority is to give a high quality service to our customers. Quality is built into every Baxi product -products which fulfil the demands and needs of customers, offering choice, efficiency and reliability.

To keep ahead of changing trends, we have made a commitment to develop new ideas using the latest technology - with the aim of continuing to make the products that customers want to buy.

Baxi is also the largest manufacturing partnership in the country. Everyone who works at the company has a commitment to quality because, as shareholders, we know that satisfied customers mean continued success.

We hope you get a satisfactory service from Baxi. If not, please let us know.

Baxi is a BS-EN ISO 9001
Accredited Company

The boiler meets requirements of Statutory Instrument “The Boiler (Efficiency) Regulations 1993 No 3083” and is deemed to meet the requirements of Directive 92/42/EEC on the efficiency requirements for new hot water boilers fired with liquid or gaseous fuels.

Type test for purpose of Regulation 5 certified by:
Notified Body 0086.

Product/production certified by: Notified Body 0086.

CONTENTS - Page 3

Introduction PAGE 4

Technical Data PAGE 5

System Details PAGE 6 - 8
Water Circulating Systems
Treatment of Water Circulating Systems
Pipework
System Controls
Fully Pumped System
Overheat Kit & Sealed Systems
Storage Systems
Pumped Heating & Gravity Hot Water

Site Requirements PAGE 9 - 12
Builders & Fireplace Opening
Location
Fireplace Surround
Flue
Ventilation
Gas Supply
Electrical Supply

Installation PAGE 13 - 22
Initial Preparation
Siting the Boiler
Securing the Boiler
Water Connections
Fully Pumped Systems
Overheat Thermostat
Pumped Heating & Gravity Hot Water
Gas Connection
Electrical Connection
Making the Electrical Connection
Refilling the Controls
Flue Connection
Completion

Commissioning the Appliance PAGE 23 - 24

Annual Servicing PAGE 25 - 28
Removal of Firefront
Removal of Controls
Cleaning the Lint Arrestor
Cleaning the Burner & Main Injector
Cleaning the Pilot / A.S.D. Assembly
Cleaning the Heat Exchanger

Changing Components PAGE 29 - 34
Removal of Firefront
Flame Sensing Lead
Ignition Lead
Gas Valve
Burner & Main Injector
Pilot / A.S.D. Assembly
Thermostat
Piezo Igniter Unit
Suppression Capacitor
Thermostat Sensor
Thermostat Potentiometer
Printed Circuit Board

Short Parts List PAGE 35

Fault Finding PAGE 36 - 40

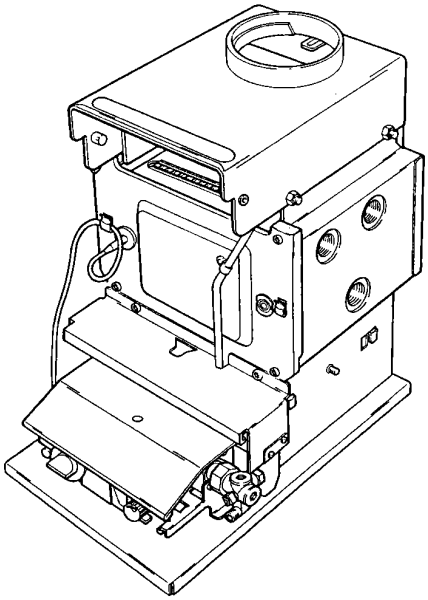

45/4 Manual Boiler

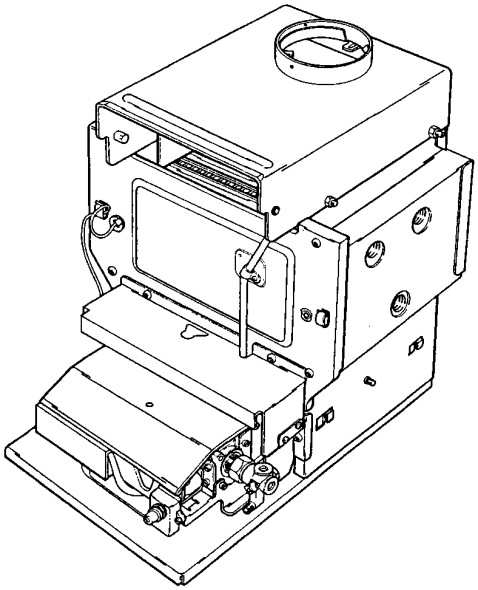

57/4 Electronic Boiler

"Benchmark" Log Book

As part of the industry-wide "Benchmark" initiative all Baxi boilers now include an Installation, Commissioning and Service Record Log Book. Please read the Log Book carefully and complete all sections relevant to the appliance and installation. These include sections on the type of controls employed, flushing the system, burner operating pressure etc. The details of the Log Book will be required in the event of any warranty work. Also, there is a section to be completed at each subsequent regular service visit.

Description

The Baxi Bermuda is a combined central heating boiler and gas fire designed for installation within a builders opening in the living space of a dwelling.

These installation and servicing instructions cover all natural gas models. There are two physical sizes of boiler, the Bermuda 45 being the smaller. Both Bermuda 45 and 57 are available with either electronic or manual controls. The appliance is fitted with an Atmospheric Sensing Device which will shut the boiler down in the event of adverse flue conditions. All installation and servicing procedures are the same for each size of boiler. Any differences in procedure between electronic and manual control versions are covered in this booklet.

These instructions relate to the central heating boiler section of the appliance.

The two models of the boiler have range rated outputs as shown.

	HEAT OUTPUT		
Model	Max	Mid	Min
45	13.19kW (45,000 Btu/h)	11.72kW (39,989 Btu/h)	10.26kW (35,000 Btu/h)
57	16.85kW (57,500 Btu/h)	14.65kW (49,986 Btu/h)	13.19kW (45,000 Btu/h)

Each appliance is preset at its MIDRANGE heat input rate and is designed for use on NATURAL GAS only. The boilers are suitable for fully pumped and pumped central heating with gravity hot water systems. The propane back boiler is covered by its own instructions supplied with it. An optional overheat thermostat kit is available for sealed systems or where additional system protection is required.

Baxi Part N° 235565 for 45/4E & 57/4E
Baxi Part N° 234885 for 45/4M & 57/4M

Installation

The installation must be carried out by a CORGI Registered Installer or other Competent Person and be in accordance with the relevant requirements of GAS SAFETY (Installation and Use) REGULATIONS, the BUILDING REGULATIONS (Scotland) (Consolidation), the LOCAL BUILDING REGULATIONS, the current I.E.E. WIRING REGULATIONS and the bye laws of the LOCAL WATER UNDERTAKING. Where no specific instructions are given, reference should be made to the relevant B.S. CODES OF PRACTICE.

All systems must be thoroughly flushed and treated with inhibitor (see System Details).

B.S. Codes of Practice

STANDARD	SCOPE
BS 6891	Gas Installation.
BS 5546	Installation of hot water supplies for domestic purposes.
BS 5449	Forced circulation hot water systems.
BS 6798	Installation of gas fired hot water boilers.
BS 5440 Pt 1	Flues.
BS 5440 Pt 2	Air Supply.
BS 5871 Pt 1	Installation of fire/back boilers, gas appliances.
BS 6500	Cables

Bermuda Boiler 57/4

Heat Input	Max	Mid	Min
kW	16.49	14.84	12.98
Btu/h	56,250	50,498	44,287

Heat Output	Max	Mid	Min
kW	13.19	11.72	10.26
Btu/h	45,000	39,989	35,000

Burner Pressure	Max	Mid	Min
mbar	17	13.5	10.5
in wg	6.8	5.4	4.2

Water Content		Water Temp
litres	2	Max
gallons	0.44	82°C

Thermocouple Output 7.5 - 13mV (Manual)

Gas Connection R_C ½ (½ in BSPT)

Water Connections R_C1 (1 in BSPT)

Electricity Supply 230V~50Hz
External fuse - 5Amp
Appliance Rating: 17 watts (E) 4.8 watts (M)

Controls 45/4 E - Electronic thermostat intermittent pilot & timed electronic flame sensing with atmospheric sensing device.
45/4 M - Mechanical thermostat, thermocouple with permanent pilot & atmospheric sensing device.

Gas Rate (after 10 mins on maximum) 1.57 m³/h (55.44 ft³/h)

Lifting Weight (as packed) 40.8 kg (90 lbs)

Dimensions		
	Height	530mm (21 in)
	Depth	483mm (19 in)
	Width	338mm (13.3 in)

Flue Diameter	
mm	125
in	5

Heat Exchanger Cast Iron

Low Head	(Min)
mm	1000
in	39⅜

System Design Fully pumped or pumped heating with gravity hot water. Sealed system with overheat thermostat modification.

Static Head	(Max)
m	30
ft	100

Bermuda Boiler 45/4

Heat Input	Max	Mid	Min
kW	21.07	18.55	16.69
Btu/h	71,890	63,293	56,962

Heat Output	Max	Mid	Min
kW	16.85	14.65	13.19
Btu/h	57,500	49,986	45,000

Burner Pressure	Max	Mid	Min
mbar	17	13	10.5
in wg	6.8	5.2	4.2

Water Content		Water Temp
litres	2.25	Max
gallons	0.495	82°C

Thermocouple Output 7.5 - 13mV (Manual)

Gas Connection R_C ½ (½ in BSPT)

Water Connections R_C1 (1 in BSPT)

Electricity Supply 230V~50Hz
External fuse - 5Amp
Appliance Rating: 17 watts (E) 4.8 watts (M)

Controls 57/4 E - Electronic thermostat intermittent pilot & timed electronic flame sensing with atmospheric sensing device.
57/4 M - Mechanical thermostat, thermocouple with permanent pilot & atmospheric sensing device.

Gas Rate (after 10 mins on maximum) 1.97 m³/h (69.57 ft³/h)

Lifting Weight (as packed) 45.8 kg (101 lbs)

Dimensions		
	Height	530mm (21 in)
	Depth	483mm (19 in)
	Width	402mm (15.8 in)

Flue Diameter	
mm	125
in	5

Heat Exchanger Cast Iron

Low Head	(Min)
mm	1000
in	39⅜

System Design Fully pumped or pumped heating with gravity hot water. Sealed system with overheat thermostat modification.

Static Head	(Max)
m	30
ft	100

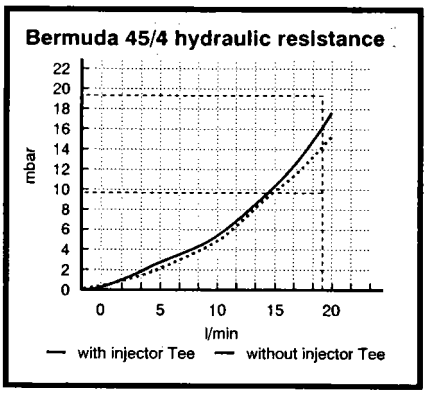

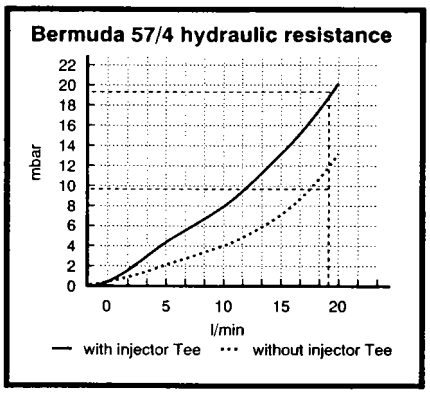

Sedbuk Declaration For Bermuda 45/4 and 57/4 Boilers

The seasonal efficiency (SEDBUK) are

45/4M	72.7%
45/4E	76.8%
57/4M	71.8%
57/4E	75.8%

This value is used in the UK Government's Standard Assessment Procedure (SAP) for energy rating of dwellings. The test data from which it has been calculated has been certified by 0086.

Water Circulating Systems

The appliance is suitable for open vented systems which are either fully pumped or pumped central heating with gravity domestic hot water.

An overheat thermostat modification kit is available where additional control protection is required and for sealed system applications. This must not be used on gravity systems

The following conditions should be observed at all times:

The static head must not exceed 30m (100ft) of water.
The boiler must not be used with a direct cylinder.
Drain cocks should be fitted to all system low points.
All gas and water pipes and electrical wiring must be installed in such a way that it does not restrict the servicing of the boiler. Position isolating valves as close as possible to the circulating pump

Treatment of Water Circulating Systems

For optimum performance after installation, this boiler and its associated central heating system must be flushed in accordance with the guidelines given in B57593: 1992 'Treatment of water in domestic hot water central heating systems'.
This must involve the use of a proprietary cleanser, such as BetzDearborn's Sentinel X300 or X400, or Fernox's Superfloc. Full instructions are supplied with the products, but for immediate information, please contact BetzDearborn on 0151 420 9563, or Fernox on 01799 550811.

For long term protection against corrosion and scale, after flushing, it is recommended that an inhibitor such as BetzDearborn's Sentinal X100, or Fernox's MB-1 or Copal is dosed in accordance with the guidelines given in B5S593: 1992.

Failure to flush and add inhibitor to the system may invalidate the appliance warranty.

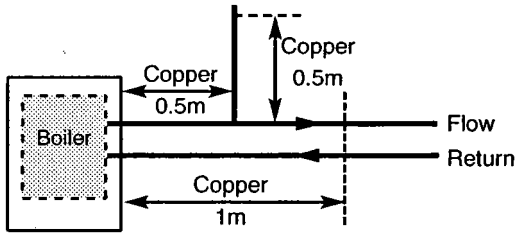

Fig. 1

Pipework

The sizes of the flow and return pipes from the boiler should be determined by normal methods according to the requirements of the system (BS 5449).

It is recommended that the system is designed for an 11ºC (20ºF) drop in temperature across the system.

In systems using non-metallic pipework it is necessary to use copper pipe for the boiler Flow and Return. The copper must extend at least 1 metre from the boiler and include any branches. The copper pipe must not be insulated (Fig. 1).

System Controls

For optimum operating conditions, the heating system into which the appliance is installed should include a control system.

Such a system would comprise a timer control and a separate room and/or cylinder thermostat as appropriate.

The boiler should be controlled so that it operates on demand only.

It is not economical to rely on the boiler thermostat to control operation of the system.

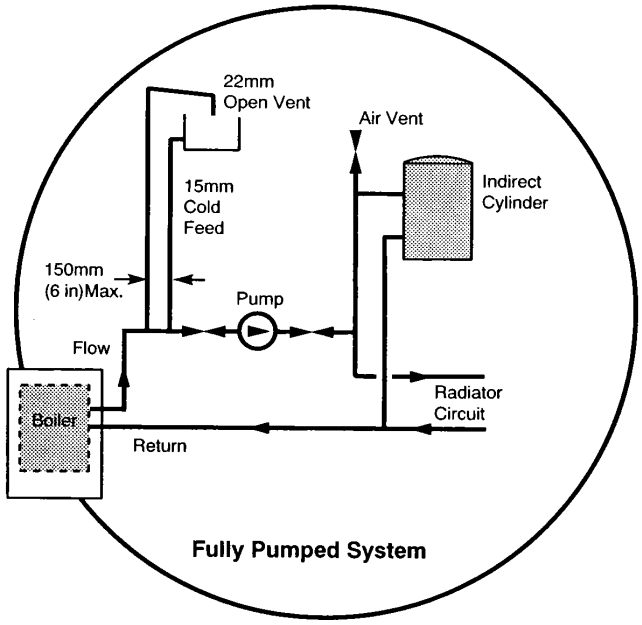

Fully Pumped System

Fully Pumped System

The sizes of the system pipes should be determined by normal methods (BS 5449).

The open vent pipe should be a minimum of 22mm and must rise continuously to a point above the feed and expansion tank.

The flow pipe from the boiler may form part of the vent pipe. No part of the open vent should contain a valve.

The cold feed pipe (15mm mm) should preferably be connected to the boiler return.

Close coupling of the cold feed pipe to the flow pipe at a maximum of 150mm (6 in) from the vent pipe is permissible but there must always be an open cold water path to the boiler return connection.

Overheat Kit And Sealed Systems

An overheat thermostat modification kit is available to facilitate the installation of a Bermuda boiler to systems incorporating a combined feed and vent and to flats and dwellings where the building design prevents the boiler vent pipe rising continuously to the feed and expansion tank. (This must not be used on gravity systems.)

Baxi Part N° 235565 for Electronic Controls
Baxi Part N° 234885 for Manual Controls

The boiler can be applied to a sealed system with the use of the overheat kit.

Information regarding the application of the overheat thermostat is included with the kit.

Storage Systems

For information regarding the use of a Bermuda boiler with.a storage system, contact the appropriate storage system manufacturer.

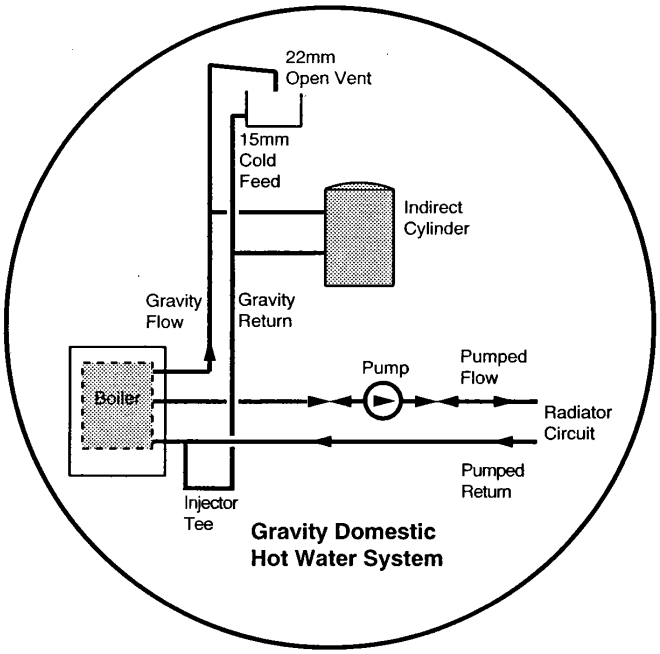

Gravity Domestic Hot Water System

Pumped Heating & Gravity Hot Water

The sizes of system pipes should be determined by normal methods (BS 5449). 28mm pipe is recommended for the gravity circuits.

The gravity flow pipe should rise vertically as close as possible to the boiler, avoiding sharp bends and tight elbows.

The open vent pipe should be a minimum of 22mm and must rise continuously to a point above the feed and expansion tank.

The flow pipe from the boiler may form part of the vent pipe.

No part of the open vent should contain a valve.
The cold feed pipe (15mm mm) should be connected to the boiler return pipework.

The brass injector tee must be fitted to the boiler return on all systems incorporating a gravity circuit.

The circulating head should not be less than 1 m (3ft.) with a maximum horizontal run of 3m (10ft.) when using 28mm pipes. Smaller pipe sizes and longer horizontal runs are acceptable with suitably increased circulating heads.

The gravity circuit should be designed with a minimum of restriction, avoiding possible air traps and long horizontal runs.

The system should be designed to prevent gravity circulation in the heating system when the pump is not running.

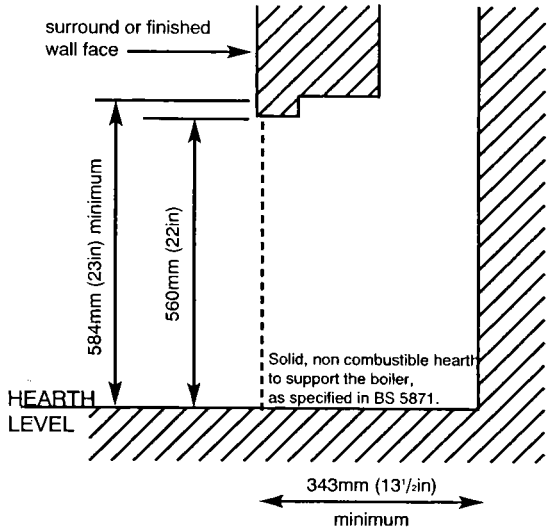

When correctly installed the centre line of the boiler flue socket will be 258mm-305mm (10⁵/₃₂ in-12 in) from the surround or finished wall face.

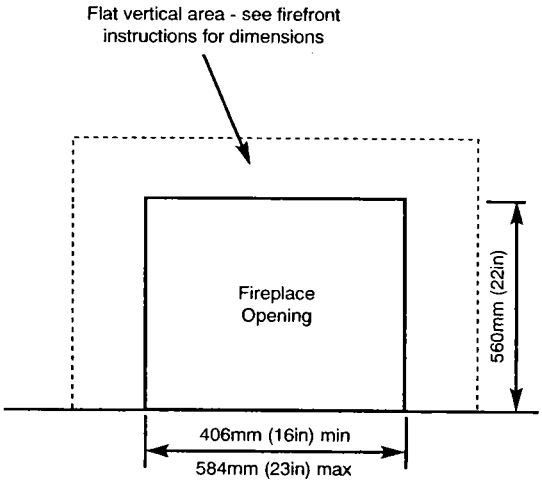

NOTE: For VP3 & SP3 maximum fireplace opening is 508mm (20 in)

Builders & Fireplace Opening

The boiler unit is designed to fit within a standard builders opening cavity, the minimum dimensions of which are 343mm(13½in) deep x 584mm(23in) wide x 584mm(23in) high.

The opening should be soundly constructed of brick, pre-cast concrete or be a proprietary builders opening. The base of the opening should be sound and non-combustible and must be flat and level.

The base of the builders opening should be at the same height as the finished level of the hearth or be the required height of 100-125mm (4-5 in) above floor level for a wall mounted firefront installation.

The fireplace opening (i.e. the opening into the cavity) must be 560mm (22in) high and between 406mm (16in) and 584mm (23in) wide.

Maximum fireplace opening sizes are preferable for ease of installation and service.

Location

The appliance must be installed in the living space of a dwelling.

Restrictions to the siting of the appliance are covered by BS 5546. The appliance may not be installed in bathrooms, shower rooms, bedrooms or bed sitting rooms.

Fireplace Surround

If a fireplace surround is to be used, it must be centrally placed and have opening sizes and a vertical flat area as shown in the firefront Installation and Servicing Instructions.

Maximum fireplace opening sizes are preferable for ease of installation and service.

NO SURROUND

The appliance can be fitted without a surround.

The fireplace opening and vertical flat areas as per above still apply.

Maximum fireplace opening sizes are preferable for ease of installation and service.

HEARTH MOUNTING

All Bermuda Firefronts are suitable for hearth mounting. The hearth must be on the same level as the builders opening. The hearth must be non-combustible and comply with BS 5871: Pt 1.

WALL MOUNTING

A number of Bermuda Firefronts are aesthetically suitable for wall mounting above the level of the room floor in instances where there is no hearth.

The base of the builders opening on which the boiler rests should be 100-125mm (4-5 in) above floor level.

The following firefronts are suitable for wall mounting:

Bermuda 5P3	Bermuda PW5 Deluxe
Bermuda CS	Bermuda RG3
Bermuda C5W	Bermuda LFE5 Super

FLUE

Prior to installation it is important to establish that the flue will perform satisfactorily. Do not proceed with the installation if the flue does not operate correctly.

The Bermuda is fitted with an Atmospheric sensing Device that will automatically shut the appliance down under adverse flue conditions and where insufficient flue pull exists.

The flue installation must conform to BS 5440 Pt 1. The flue must have a minimum vertical height of 3m (10ft) measured from the boiler flue outlet socket and have an internal cross section area of 12,700 mm^2 (20in^2), this is satisfied by a flue of 125mm (5in) internal diameter. If the flue system contains any bends the vertical height must be increased accordingly.

An approved terminal is required for all installations.

9in X 9in BRICK
Flues previously used for other fuels must be thoroughly swept. The flue must be protected with a 125mm (5in) flexible liner. The bottom of the liner should terminate 500mm (20in) above the base of the builders opening. The flue must be sealed between the liner and the brickwork at both the top and bottom.

An approved terminal must be installed.

ACID RESISTANT LINERS
A flue constructed of acid resistant liners is satisfactory provided the size requirements are met.
The boiler flue outlet can be connected to the flue by means of a short length of 125mm (5in) of flue pipe.

A seal must be made in the annular space between the outer face of this flue pipe and the acid resistant liner.

An approved terminal must be installed.

PRECAST FLUES

These must conform to BS 5440 Pt 1 and be correctly designed and installed without intrusion of cement into the flue passage.

An approved terminal must be installed.

PROPRIETARY FLUES

A flue of this type must meet the size requirements specified and be installed in accordance with the flue manufacturers recommendation and relevant codes of practice.

An approved terminal must be installed.

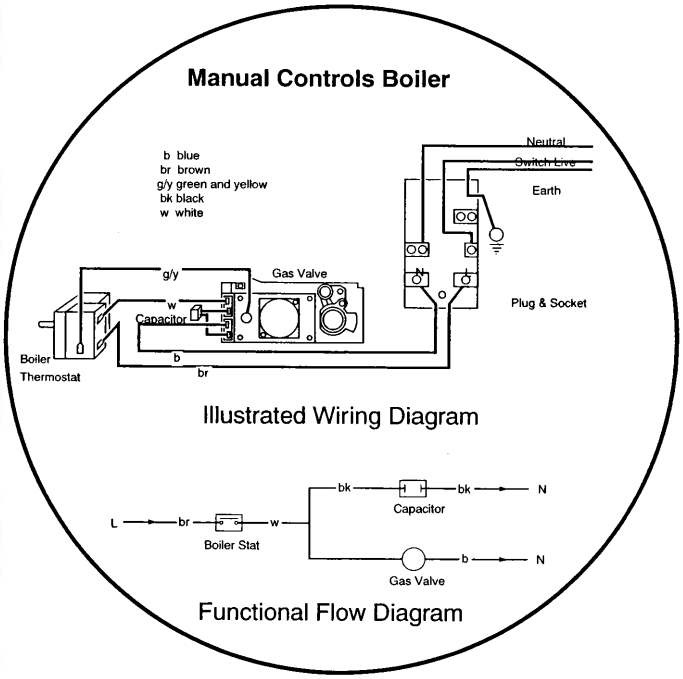

Ventilation

Ventilation air supply to BS 5440 Pt 2 is required.
The permanent ventilation area size requirements are given in the firefront Installation and Servicing Instructions.

The permanent vent may be directly into the room containing the appliance. The vent may also be sited in another room provided an interconnecting vent is used.

The vent must not be installed inside the builders opening. The vent should be sited following good practise for a habitable room. We recommend the use of the Stadium BM720 “Black Hole” ventilator which is available from your local merchant.

Gas Supply

The gas installation should be in accordance with BS 6891. The connection at the appliance is Rc ½ (½in BSPT internal) located at the rear of the gas cock.

Ensure the pipework from the meter to the appliance is of adequate size and suitably protected. It is preferable to route the gas supply pipe to the right hand side of the builders opening. It must be routed so as not to restrict the installation and servicing of the appliance.

Electrical Supply

External wiring must be correctly earthed, polarised and in accordance with current IEE wiring regulations. The mains supply is 230V ~ 50Hz
fused at 5 A.

NOTE: The method of connection to the electrical supply must facilitate complete electrical isolation of the appliance, connection may be made via a fused double pole isolator with a contact separation of at least 3mm on all poles and serve the appliance and system controls only.

The cable within the builders opening should be 0.75 mm^2 to IEC 53 Code 227 (heat resistant).

The cable must be routed to avoid contact with the metal combustion box and hood.

PERMANENT LIVE

A permanent live electrical supply is required for all firefronts with lighting effects i.e. VP3, 5P3, RG3, 5L3, LFE5 Super and GF3 Super. The permanent live is also required to operate the electronic ignition on VP3, 5P3 and RG3 models.

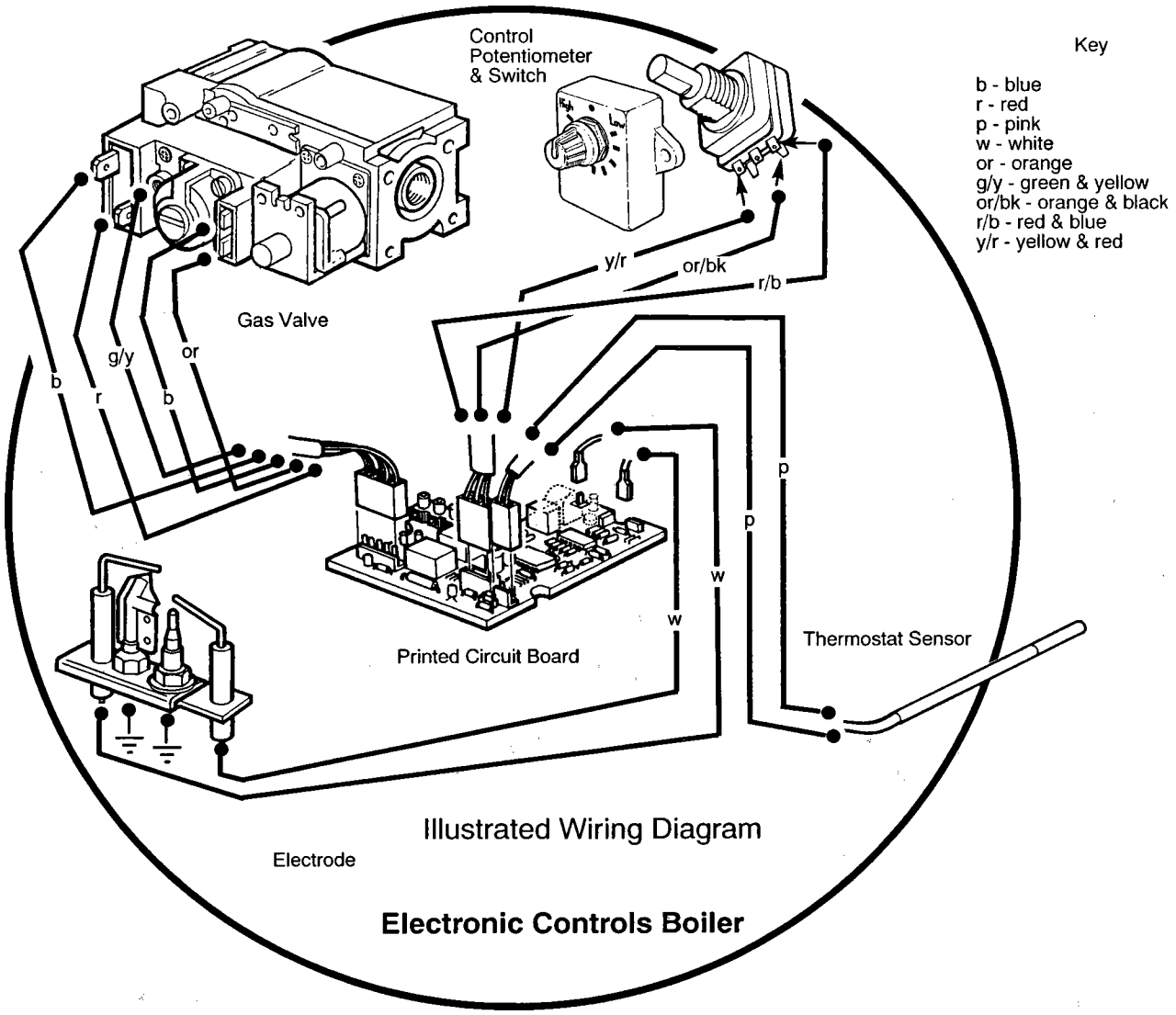

Illustrated Wiring Diagram

Electronic Controls Boiler

Functional Flow Diagram

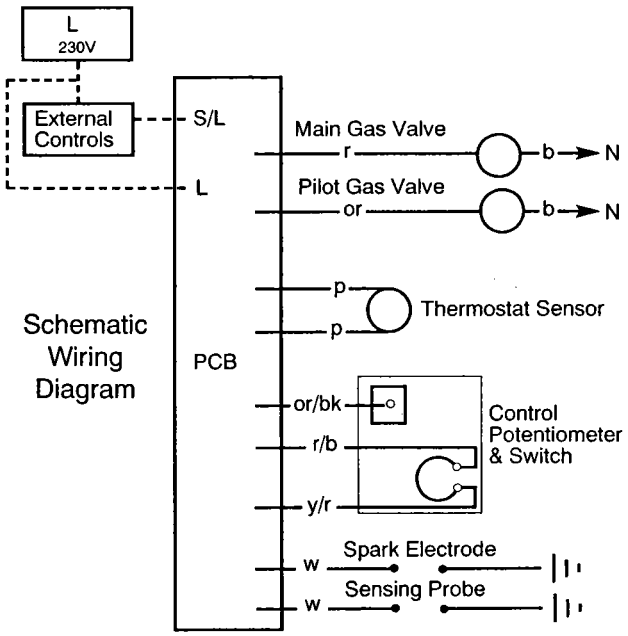

It is preferable to route the input cable from the left hand side of the builders opening.

The cable can be secured to either the boiler base or fire support plate using the 'P' clip supplied in the kit.

NOTE: Polarity of the appliance MUST be correct otherwise the appliance will not operate correctly.

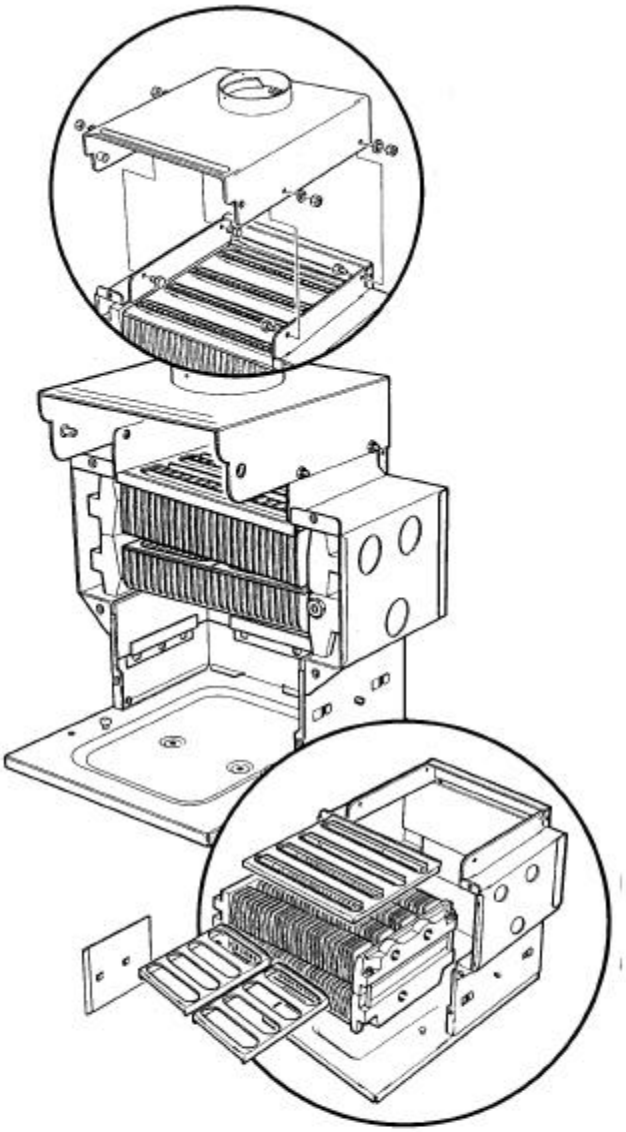

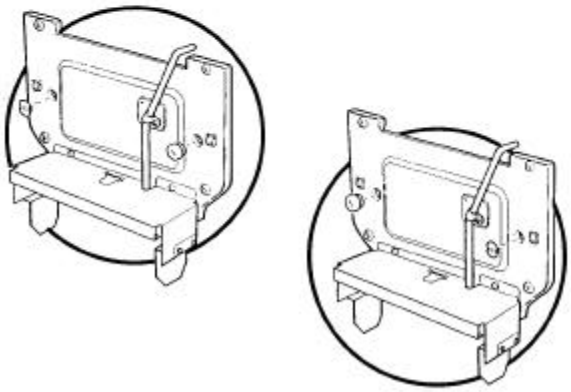

Initial Preparation

Remove the outer carton and locate the fitting kit. Remove and discard the packing pieces and unpack the boiler hood.

The hood may be fitted now or when the boiler is in situ. Use the four nuts and set screws provided.

Remove the controls heat shield from its retaining clips.

Remove the four screws retaining the combustion box door and remove the door.

Slacken the two screws holding the controls to the boiler base. Remove the two screws retaining the controls to the combustion box and remove the controls.

The boiler as supplied has the flow and return water connections at the left hand side of the appliance.

For installations requiring the water connections at the right hand side proceed as follows:

(This operation is performed most easily with the boiler on its back).

Lift out the 3 heat exchanger baffles, noting their orientation.

Lift the heat exchanger from the appliance and remove the side blanking plate.

Transfer the 3 sealing rings from the holes in the left hand side of the boiler to those in the right.

Rotate the heat exchanger to place the water connections at the right hand side, return the
heat exchanger to the combustion box.

DO NOT TURN THE HEAT EXCHANGER UPSIDE DOWN

NOTE: The heat exchanger is correctly oriented when the three water connections line up with the holes in the right hand side of the combustion box and the thermostat pocket aligns with the corresponding hole in the door. The unfinned heat exchanger water tubes face the burner.

Remove the blanking disc from the left hand hole in the boiler door and the rubber seal from the right hand hole and swap them over.

Replace the heat exchanger baffles and blanking plate.

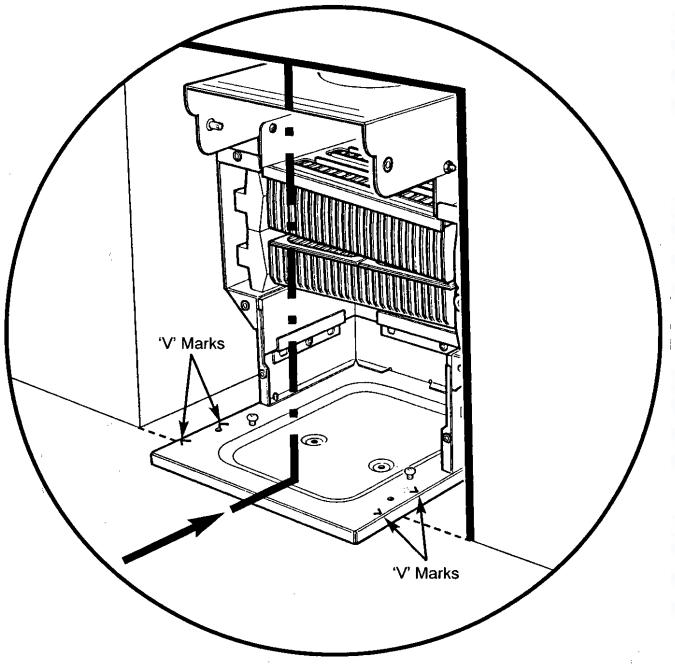

Siting the Boiler

The fireplace and builders opening should be as described under 'site requirements' and be clean, sound and level.

The flue should be installed as described under 'site requirements'.

Locate the centre line of the opening and hearth.

Hold the boiler by its combustion box at either side of the heat exchanger, lift from the packing base and place into the opening.

Align the boiler centrally using the "V" mark on the front centre of the appliance base.

The appliance positioning into the opening is variable to cater for pipe/flue alignment.

The boiler may be positioned by locating the front face of the fireplace anywhere between the two "V" marks on either side of the appliance base.

Securing The Boiler

Check the alignment within the opening is correct. The hearth should be drilled as follows:

Mark the hearth through the two holes in the base. Remove the boiler and drill the hearth. Insert suitable plugs. Replace the boiler.

or

Drill directly through the two fixing holes and insert the plugs.

Secure the boiler with two suitable screws.

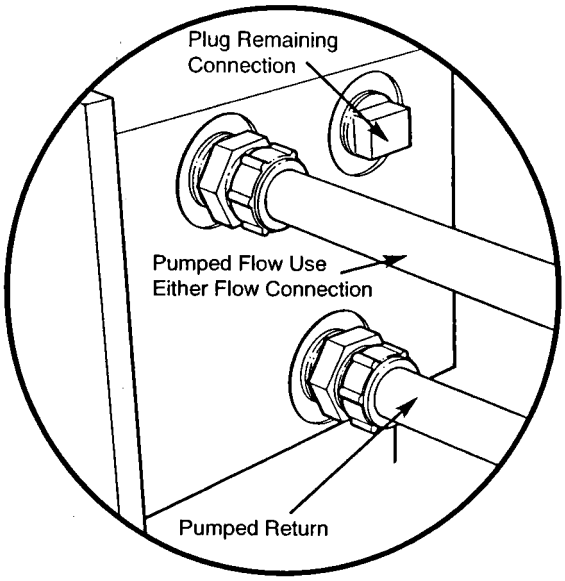

Water Connections

The boiler has one return and two flow tappings, Rc (1 in BSPT). The two upper tappings are the flow connections. The return is the lower position tapping and is marked RETURN. It is essential the flow and return pipes are connected to the correct tappings.

Fully Pumped Systems

A 1in x 22mm threaded adaptor, compression nut and olive are provided in the kit for the return connection.

Fit the 1 in x 22mm threaded adaptor into the lower tapping marked RETURN, connect the pumped return into the adaptor using the nut and olive.

Fit a 1 in x 22mm threaded adaptor into the higher tapping position marked FLOW, connect the pumped flow into the adaptor.

Fit a 1 in plug to the remaining connection.

Follow the instructions under ‘System Details’ regarding the vent pipe and cold feed.

Overheat Thermostat

For systems requiring an overheat thermostat, a modification kit is available. The flow pipe arrangement for this type of installation is covered in the instructions supplied with that kit.

Baxi Part N° 235565	for 4514E & 57/4E
Baxi Part N° 234885	for 45/4M & 57/4M

This kit is not suitable for systems where a gravity domestic hot water circuit is used.

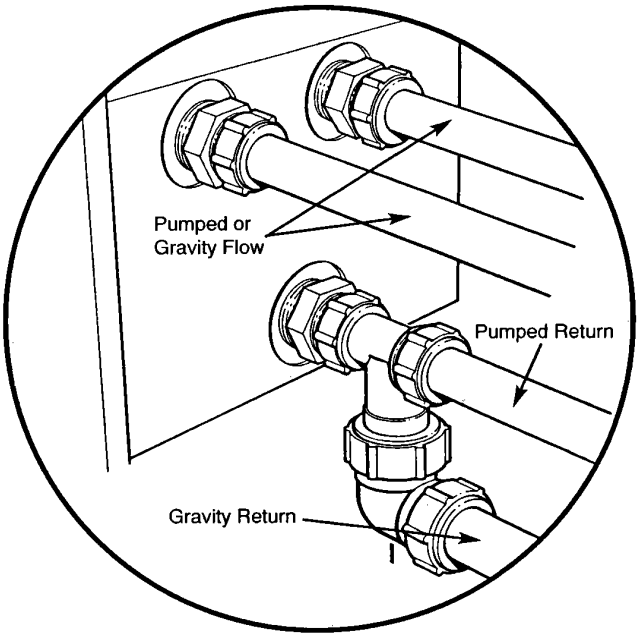

Pumped Heating
Gravity D.H.W.

Pumped Heating & Gravity Hot Water

A 1in x 22mm threaded adaptor, two compression nuts and olives and a brass injector tee piece are provided in the kit for the return connection.

NOTE: The injector tee must be fitted to the return of all systems with gravity domestic hot water.

Fit the 1in x 22mm threaded adaptor into the lower tapping marked RETURN.

Fit the injector tee into the adaptor. The injector tee may be oriented as shown to facilitate connection to the gravity return pipework, or 45º either side of the vertically downward plane.

Connect the pumped return to the 22mm compression fitting of the injector tee.

Take the gravity hot water return pipe to a level beneath that of the injector tee and connect upwards to the 28mm branch of the injector tee, as shown.

Connect the pumped flow to the connection marked FLOW. Connect the gravity flow to the remaining connection.

The gravity flow pipes must rise vertically as close as possible to the appliance. Ensure the pipework is routed such that it does not introduce an airlock in the boiler.

Follow the instructions under ‘System Details’ regarding the vent pipe and cold feed.

Gas Connection

Connection to the gas supply is Rc ½ (½in BSPT) internal located at the rear of the gas cock.

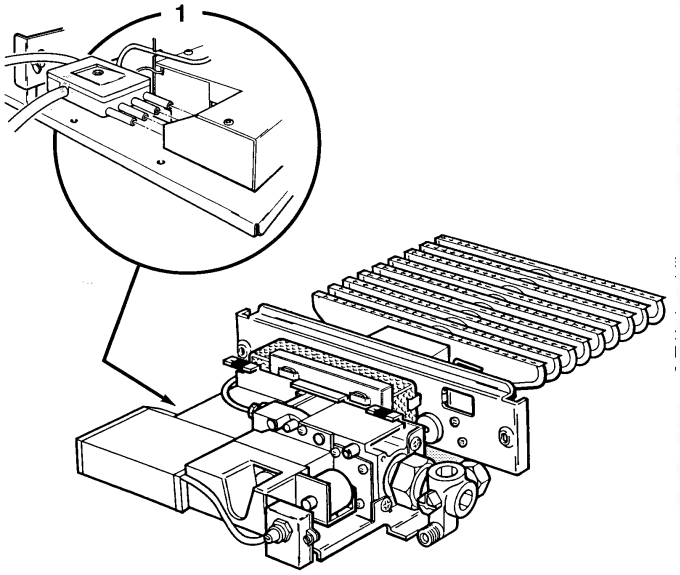

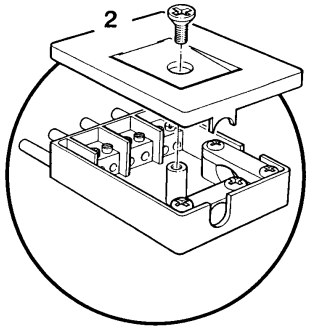

Electrical Connection

The appliance requires an electrical supply from the heating controls system. A permanent live is required for firefronts which have electronic ignition and/or light effects.

WARNING

The appliance must be earthed. The input cable for the appliance must be not less than 0.75mm^2 to IEC 53 Code 227 (heat resistant). The system external controls and the appliance must be supplied by the same isolator. **NOTE: The polarity of the electrical supply must be correct otherwise the appliance will not operate.**

OVERHEAT THERMOSTAT
Where an overheat thermostat modification kit is required, the wiring instructions supplied in the kit must be followed.

Making the Electrical Connection

On installations where the firefront requires a permanent live locate the kit in the firefront carton and extract the electrical lead and plug assembly.

ELECTRONIC CONTROLS MODELS

1
Remove the electrical inlet socket from the PCB at the rear left hand side of the control box.

2
Remove the socket cover and inlet cable clamp.

3

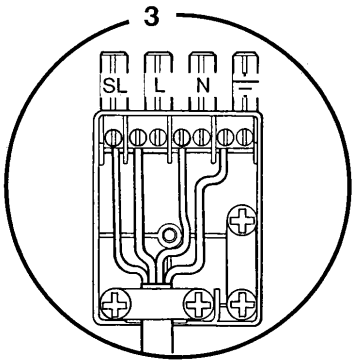

3

For installations requiring a permanent live ie:- where the firefront is equipped with either lighting effects or lighting effects and electronic ignition proceed as follows:-

Connect the inlet supply cable(s) as indicated:-

Permanent live to **L**
Controls system switched live to **SL**
Control system neutral to **N**
Earth to ⏚

4

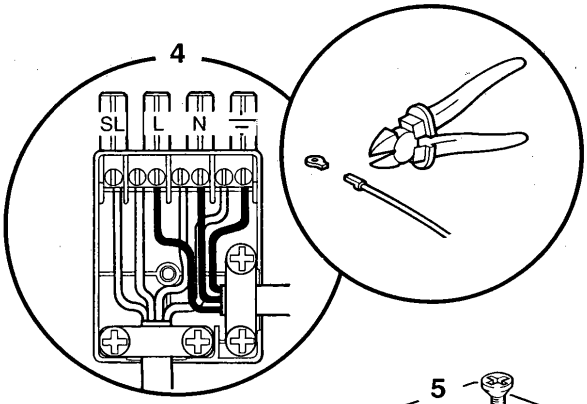

4

The circular part of the ring terminal on the earth wire must be detached.

Remove the side cable clamp and connect the wire from the fire front kit as indicated:-

Brown (live) to **L**
Blue (neutral) to **N**
Green and yellow (earth) to ⏚

5

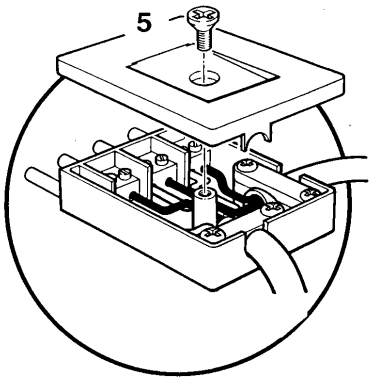

5

Re-fit both cable clamps ensuring that the outer insulation is securely held and re-fit the socket cover.

For installations not requiring a permanent live ie: radiant fire fronts proceed as follows:-
Connect the inlet supply cable as indicated:-

Control system switched live to **SL**
Control system neutral to **N**
Earth to ⏚

Using the wire provided in the kit, link SL to L.

Re-fit the cable clamp ensuring that the outer insulation is securely held and refit the socket Cover.
Ensure that all cables are routed away from the boiler casing and hood.

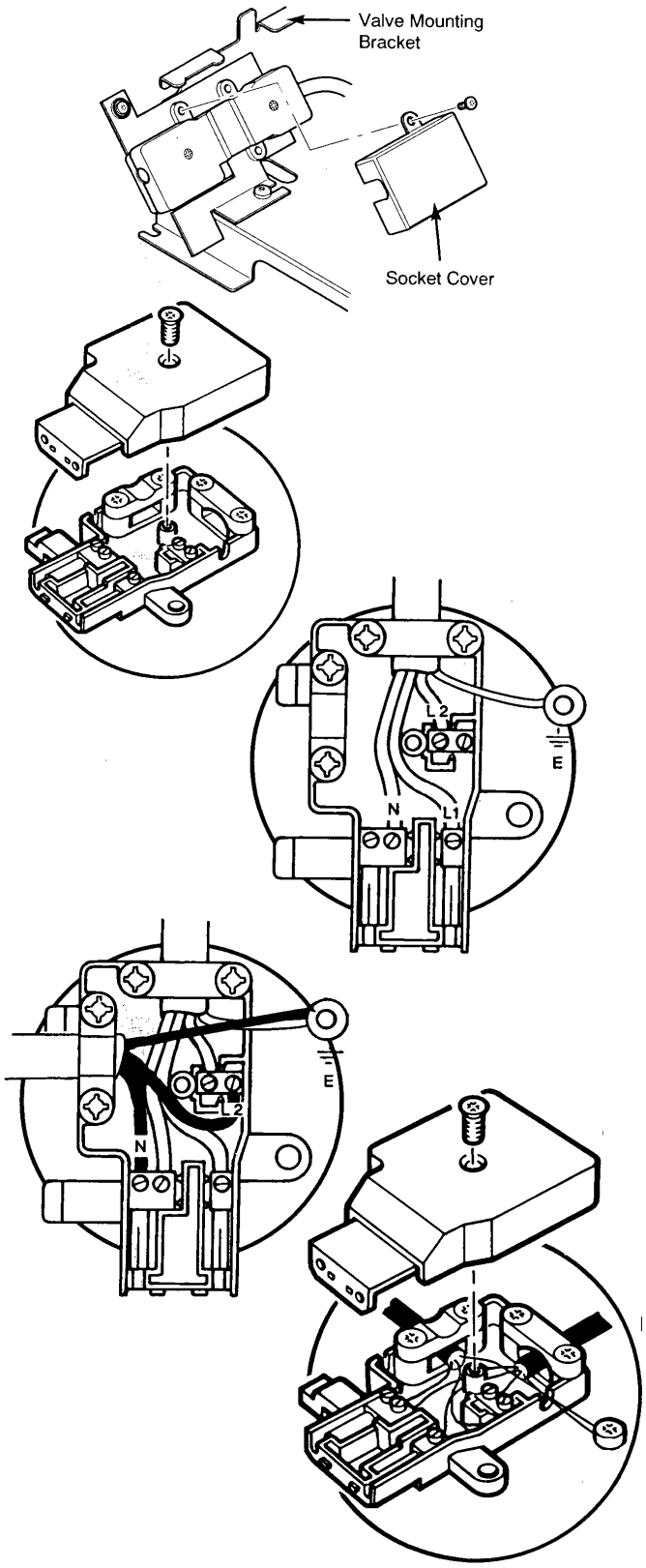

MANUAL CONTROL MODELS

NOTE: The cover **must** be replaced after making electrical connections.

Undo the screw retaining the socket cover and plug and socket to their mounting bracket.

Disconnect the input socket from the controls plug. Remove the socket cover and inlet cable clamp.

For installations requiring a permanent live i.e. where the fire front is equipped with either lighting effects or lighting effects and electronic ignition, proceed as follows:-

Connect the inlet supply cable(s) as indicated:-
Permanent live to **L2**
Control system switched live to **L1**
Control system neutral to **N**

Route the earth through the cut out in the side of the socket housing leaving sufficient length to connect the wire to the earth terminal on the mounting bracket.

Remove the side cable clamp and connect the wire from the firefront kit as indicated:
Brown (live) to **L2**
Blue (neutral) to **N**
Green &Yellow (earth) in a similar manner to the mains earth wire.

Refit both cable clamps ensuring that the outer insulation is securely held and refit the socket cover.

For installations where no permanent live is required i.e. radiant firefronts, proceed as follows:

Connect the inlet supply cable as indicated:
Controls system switched live to **L1**
Control system neutral to **N**

Route the earth through the cut out in the side of the socket housing leaving sufficient length to connect the wire to the earth terminal on the mounting bracket.

Refit the cable clamp ensuring that the outer insulation is securely held and refit the socket cover.

Ensure that all cables are routed away from the boiler casing and hood.

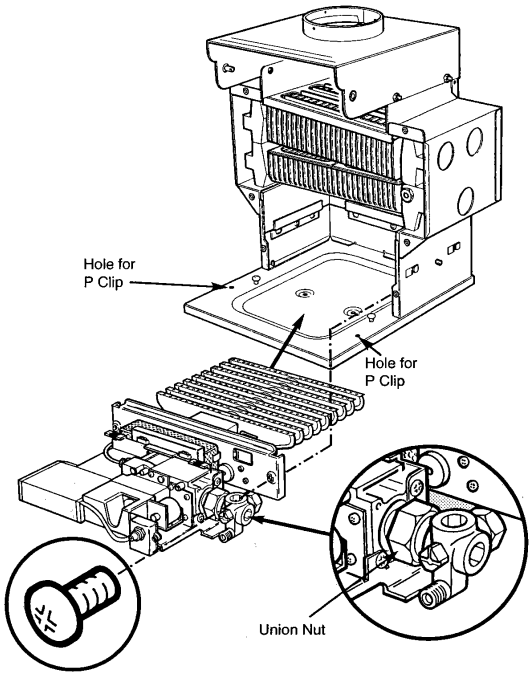

Refitting the Controls

Take the controls assembly and locate the slots in the controls mounting bracket under the screws in the base tray. Align the .holes in the burner mounting plate with those in the combustion box sides and insert the screws.

Tighten the four screws.

Undo the union nut between the gas service tap and valve. Connect the gas supply to the service tap and reconnect the service tap to the valve. The gas supply pipe should be routed from the right hand side. If this is not possible, it may be routed from the left hand side, passing behind the boiler.

The positioning of the gas supply pipe must not restrict the servicing of the appliance.

ELECTRONIC CONTROLS MODELS

Replace the combustion box door and secure with the four screws. Ensure that the sensing pipe locates over the pilot breather sealing washer. The screws must be tight to achieve the required seal and to ensure correct operation of the Atmospheric Sensing Device.

Insert the thermostat sensor and retaining strip through the rubber seal in the door into the heat exchanger thermostat pocket. Engage the sensor wire in the routing clips.

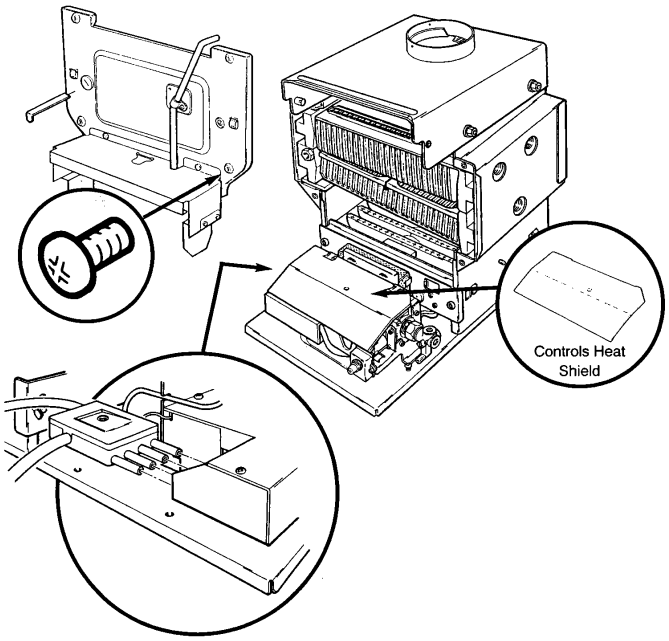

Connect the electrical input socket to the plug on the PCB.

Adjust the position of the thermostat potentiometer bracket. Undo the securing screw and push fully in if a radiant fire is to be fitted or pull out to mark “A” for flame effects.

Refit the controls heat shield to its retaining clips. If a radiant appliance is to be installed the heat shield from the fire kit can now be fitted.

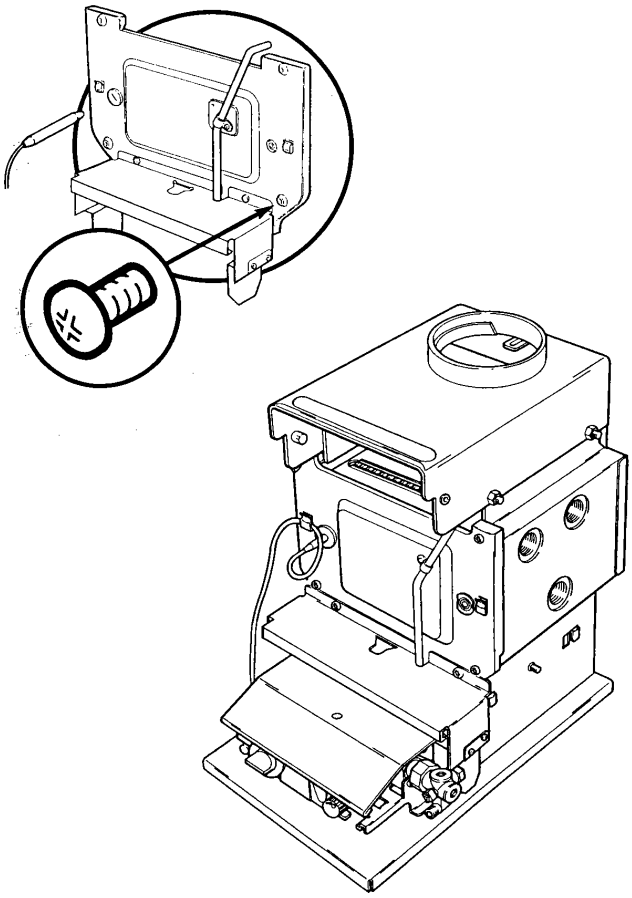

MANUAL CONTROL MODELS

Replace the combustion box door and secure with the screws previously removed.

Ensure that the sensing pipe locates over the pilot breather sealing washer. The screws must be tight to achieve the required seal and to ensure correct operation of the Atmospheric Sensing Device.

Insert the thermostat phial through the rubber seal in the door into the heat exchanger thermostat pocket. Engage the capillary in the routing clips.

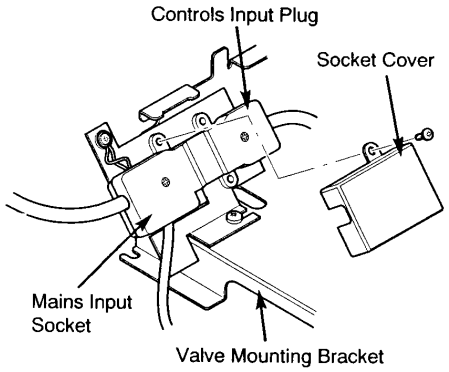

Connect the input socket to the valve plug and locate the socket in the mounting bracket slot. Refit the socket cover using the screw previously removed.

Refit controls heat shield. If a radiant appliance is to be installed the heat shield from the fire kit can now be fitted.

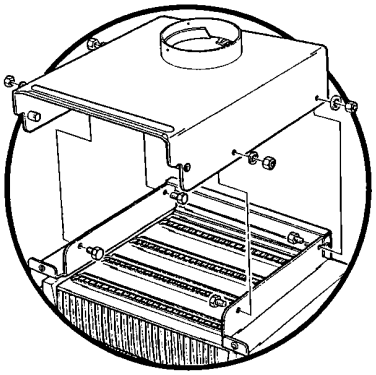

Flue Connection

If not already fitted, secure the boiler hood to the combustion box using the 4 hexagon set screws and nuts from the kit.

Locate the flue within the flue socket and secure with the three self tapping screws provided in the kit.

Seal the flue into the flue outlet socket.

Completion

Seal off any secondary openings within the builders opening after wrapping the gas and water pipes where they pass through the brickwork and within the opening itself. (B.S. 5871 Part 1).

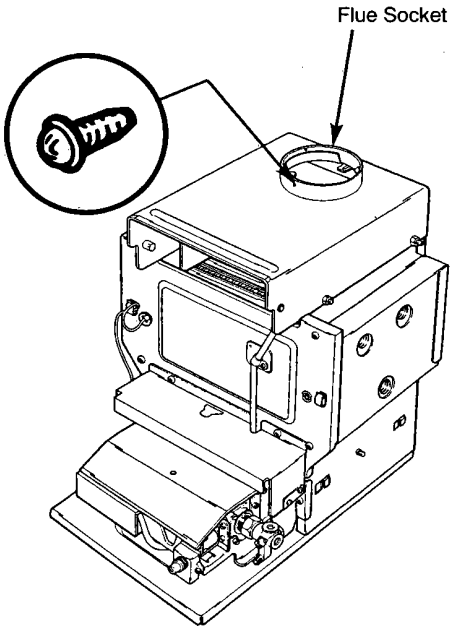

If required (see page 12) secure the cable to the boiler using the ‘P clip and screw to either boiler base (see page 20) or fire support plate.

The fire support plate is supplied in the fire front carton.

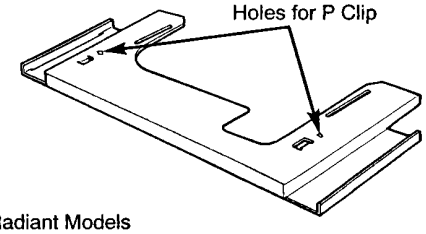

Radiant Models
Fire Support Plate

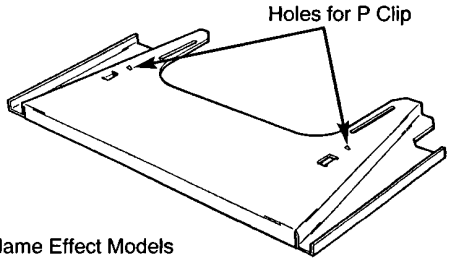

Flame Effect Models
Fire Support Plate

COMMISSIONING THE APPLIANCE - Page 23

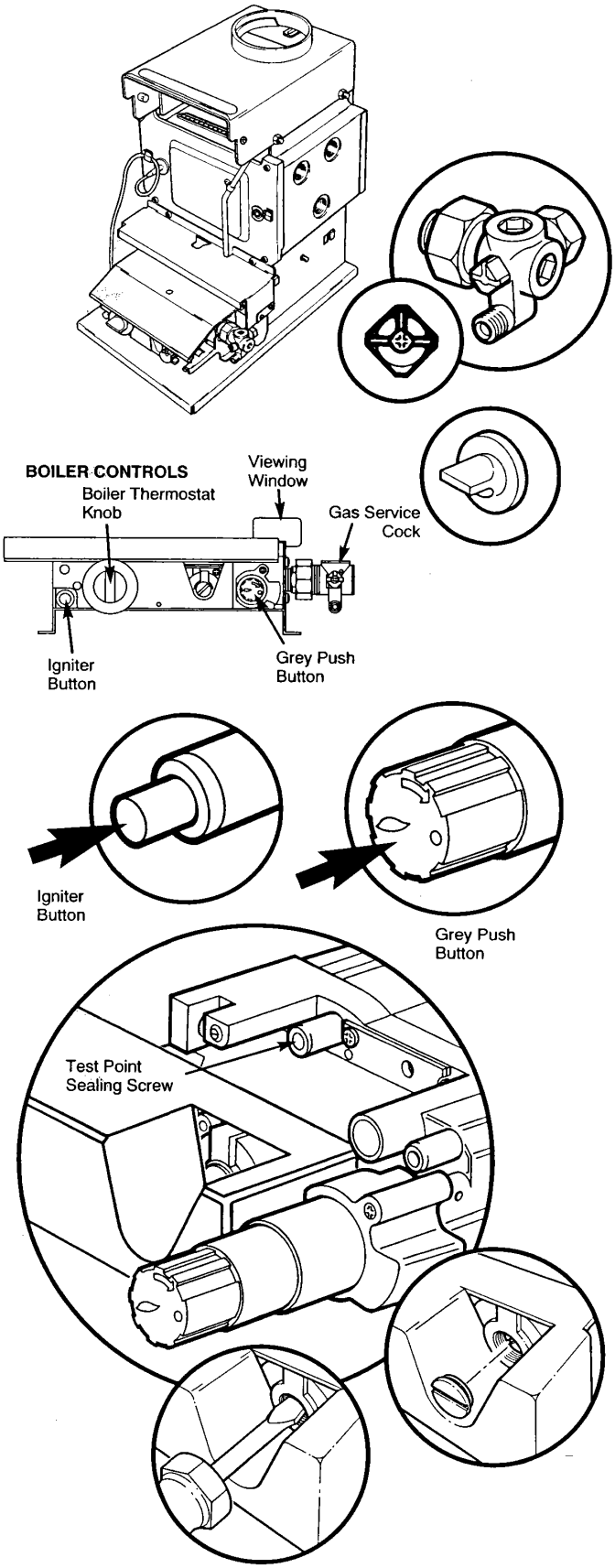

Reference should be made to BS 5449 section 5 when commissioning the boiler and system.

Flush the whole system in accordance with BS7593: 1992. (see System Details section of these instructions). Check for water leaks.

Turn the gas service cock ¼ turn from the OFF position. This will supply gas to the boiler only.

Purge the air from the gas service pipe in accordance with BS 6891 and test for gas soundness.

Turn the boiler thermostat to the OFF position.

Ensure that all external controls e.g. room'stat, timer etc. are calling for heat and turn on the mains electrical supply.

Slacken the test point sealing screw and connect a pressure gauge.

MANUAL CONTROL MODELS

Hold in the grey button on the gas control valve.

Press the piezo igniter button and release (The pilot can be seen in the viewing window on the right hand side of the controls). Repeat until the pilot lights. Hold in the grey button for a further 15 seconds.

The pilot should remain alight. If not, turn the grey button clockwise and wait 3 minutes before repeating the sequence.

The pilot flame should be without a yellow tip and be approximately 20mm long. No adjustment is possible.

Operate the burner by turning the boiler thermostat knob to the HIGH setting and check the operation of the flame failure device by turning the grey button Grey Push clockwise. The burner and pilot should extinguish.

Turn the boiler thermostat to the "O" position, wait 3 minutes and relight the pilot as previously described. Turn the boiler thermostat to HIGH and check the burner setting pressure, adjusting if necessary. This is done by removing the governor cover screw and adjusting the governor in either direction as required:- clockwise to increase, anticlockwise to decrease.

Remove the pressure gauge and tighten the pressure test point sealing screw.

The boiler and system should be run and then flushed and treated in accordance with B57593: 1992 and the flushing agent/inhibitor manufacturers instructions. When all the air has been removed from the water circuit, the pump and radiators should be balanced to achieve the design temperature drop across the system.

Carefully read and complete all sections of the "Benchmark" Installation, Commissioning and Service Record Log Book that are relevant to the appliance and installation. The details of the Log Book will be required in the event of any warranty work. The Log Book must be handed to the user for safe keeping and each subsequent regular service visit recorded.

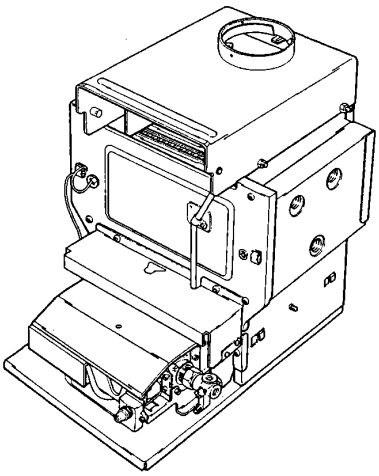

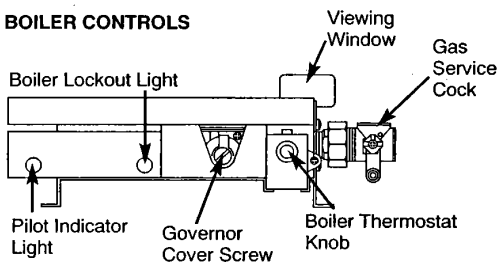

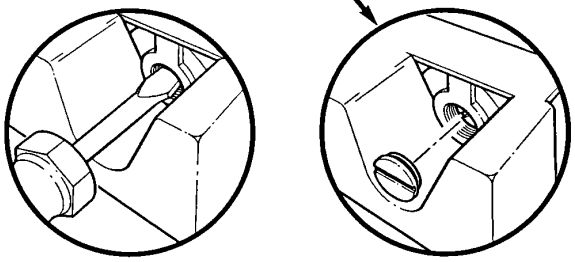

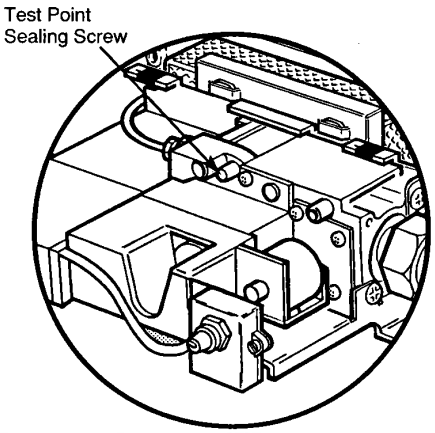

ELECTRONIC CONTROLS MODELS

On Electronic Controls models the pilot is intermittent and lights when the boiler thermostat is calling for heat.

To operate the pilot turn the thermostat to HIGH. The burner will also light shortly after the pilot has been established.

Electronic Control Models are fitted with a series of diagnostic indicator lights that indicate the status of the boiler. Three of these are visible through the top of the control box cover and two through the front of the control box. Their sequence of operation is as follows:-

a) No power-no lights.
b) Permanent live supplied-orange light illuminates.
c) Permanent live & switched live supplied-second orange light illuminates.
d) Boiler thermostat turned on-third orange light illuminates and spark generator operates.
e) Pilot established-green light illuminates and power supplied to main burner solenoid.
f) Boiler fault-orange light illuminates and boiler goes to lockout.

The pilot flame should be without a yellow tip and be approximately 20mm long. No adjustment is possible.

NOTE: On appliances without permanent live (i.e. radiant firefront installations) where terminals L and SL have been connected using the link wire, the first two orange lights will illuminate simultaneously when the switched live is supplied.

Operate the burner and allow the system to reach normal operating temperature. Make further checks for leaks and check the burner setting pressure, adjusting if necessary.

This is done by removing the governor cover screw and adjusting the governor in either direction as required:- clockwise to increase, anticlockwise to decrease.

Remove the pressure gauge and tighten the pressure test point sealing screw.

The boiler and system should be run and then flushed and treated in accordance with B57593: 1992 and the flushing agent/inhibitor manufacturers instructions. When all the air has been removed from the water circuit, the pump and radiators should be balanced to achieve the design temperature drop across the system.

Carefully read and complete all sections of the “Benchmark” Installation, Commissioning and Service Record Log Book that are relevant to the appliance and installation. The details of the Log Book will be required in the event of any warranty work. The Log Book must be handed to the user for safe keeping and each subsequent regular service visit recorded.

ANNUAL SERVICING - Page 25

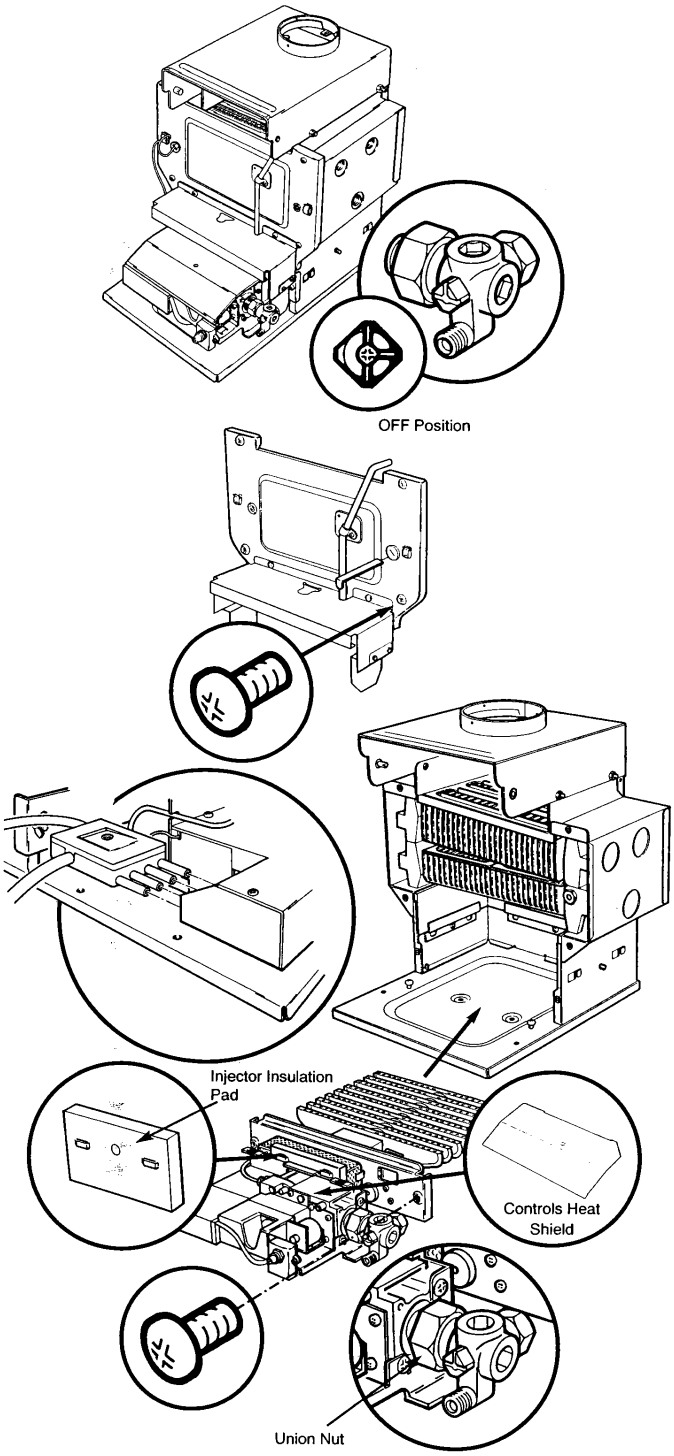

To perform annual servicing of the back boiler it is necessary to remove the firefront.

After servicing, complete the relevant section of the “Benchmark” Installation, Commissioning and Service Record Log Book. This should be in the possession of the user.

Removal of Firefront

Isolate the electrical supply to the appliance and ensure the permanent live (where fitted) has also been isolated.

Turn the gas service tap to the OFF position.

Refer to the separate firefront instructions for the removal of the firefront.

Removal of Controls

ELECTRONIC CONTROLS MODELS

Remove the thermostat sensor and retaining strip from the heat exchanger and carefully remove the sensor wire from its routing clips.

Remove the controls heat shield from its retaining clips.

Remove the four screws retaining the combustion box door and remove the door.

Lift and remove the injector insulation pad.

Pull the input socket from the plug on the PCB.

Disconnect the union nut from the gas service tap.

Slacken the two screws securing the controls to the base tray and remove the screws securing the controls to the combustion box.

Withdraw the controls assembly from the boiler.

Manual Controls Models

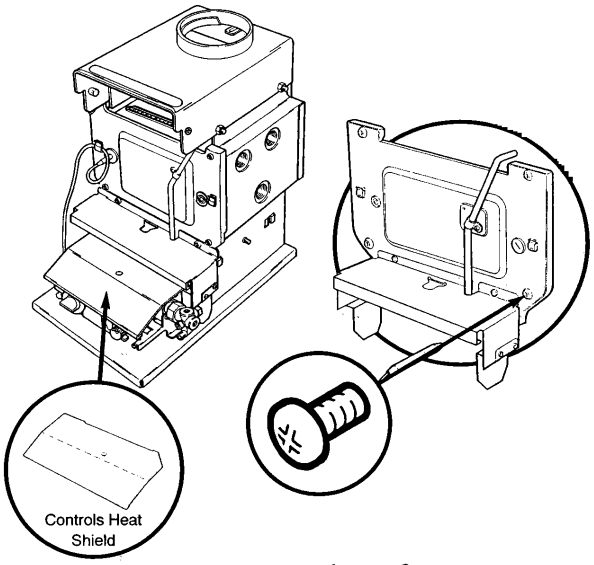

Remove the thermostat phial from the heat exchanger and carefully remove the capillary from its routing clips.

Remove the controls heat shield from its retaining

Remove the four screws retaining the combustion box door and remove the door.

Lift and remove the injector insulation pad.

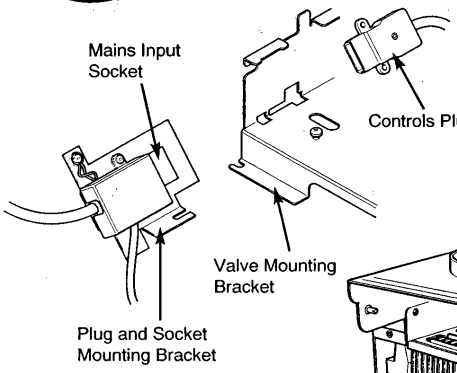

Slacken the screw securing the plug and socket mounting bracket to the valve mounting bracket.

Pull the mounting bracket to the left and disconnect the controls plug.

Lay the mounting bracket and cable to one side.

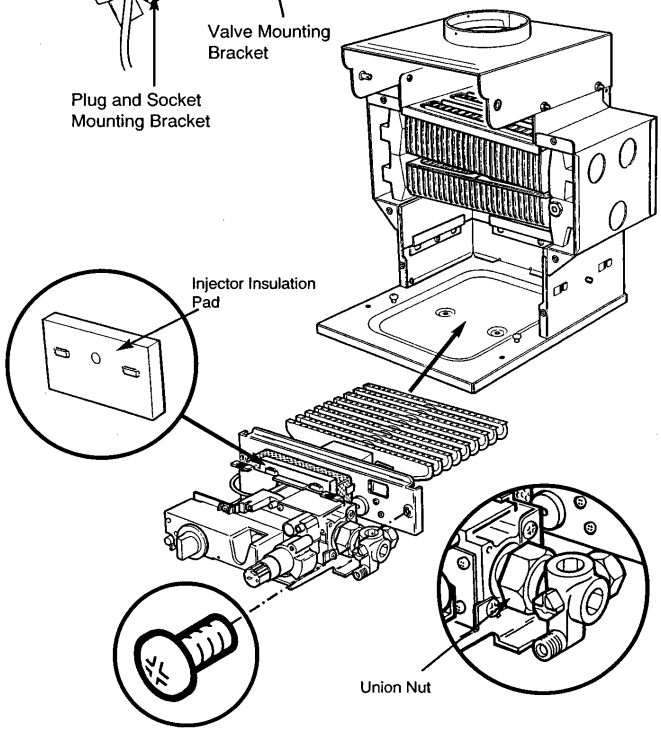

Disconnect the union nut from the gas service tap.

Slacken the two screws securing the controls to the base tray and remove the screws securing the controls to the combustion box.

Withdraw the controls assembly from the combustion box.

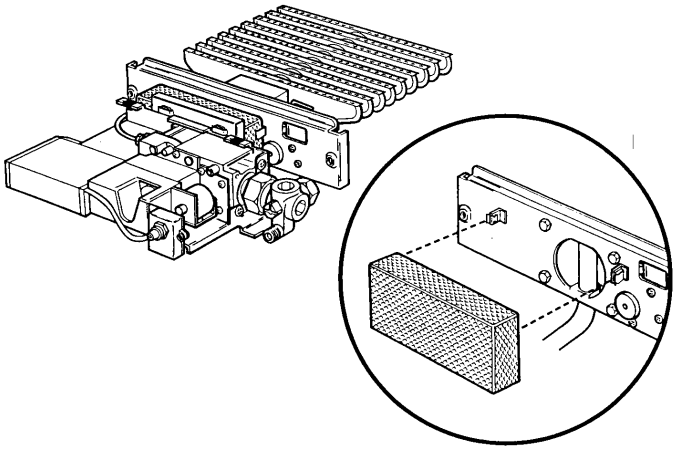

Cleaning the Lint Arrestor

Remove the lint arrestor from the controls and clean away any deposits.

Cleaning the Burner and Main Injector

Remove the four hexagon headed screws holding the burner to the burner mounting plate.

Carefully clean any deposits from the burner blades and venturi inlet.

Remove the injector from the feed pipe, retaining the copper sealing washer. Clean the injector and reassemble in reverse order.

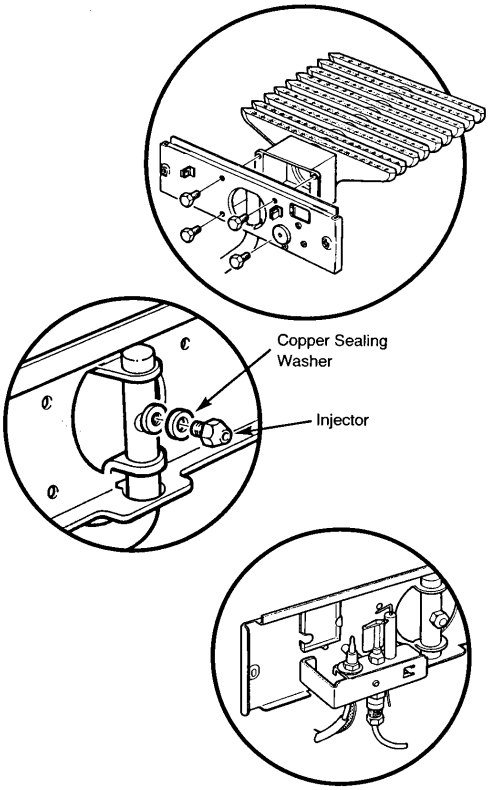

Manual Model Shown

Cleaning the Pilot / A.S.D. Assembly

Note:- No attempt should be made to clean the device using any hard tools, including pins or wire.

The thermocouple, electrode and pilot burner that make up the pilot assembly are not replaceable as separate items. If any part is damaged then the pilot assembly should be replaced.

During annual appliance servicing the pilot assembly should be inspected for damage to any of the component parts and any lint or debris should be carefully removed from the aeration hole.
Check that the spark gap between the electrode and the pilot burner is between 2.5 and 4mm.

Reassemble the burner in reverse order and refit the lint arrestor and injector insulation pad.

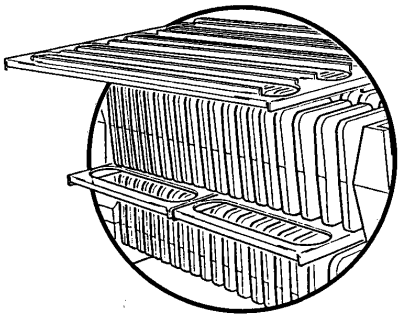

Cleaning the Heat Exchanger

Remove the top baffle and the central baffles from the heat exchanger.

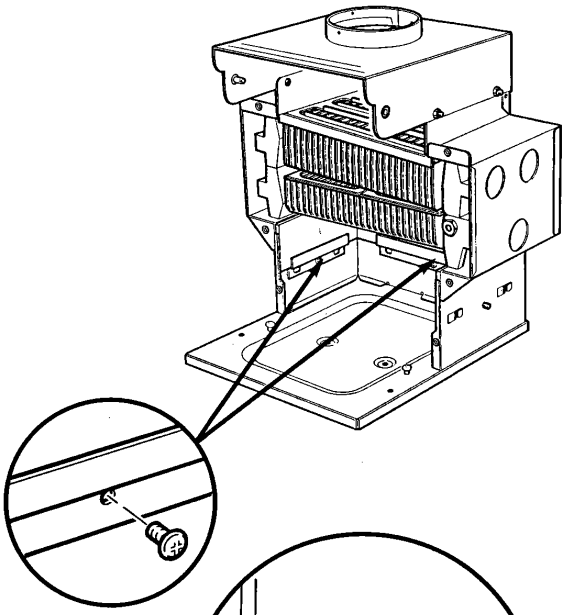

Remove the side and rear insulation pieces by undoing the screws retaining the support brackets and sliding the rear bracket to the left and both side brackets forward.

Each bracket may then be removed along with the insulation.

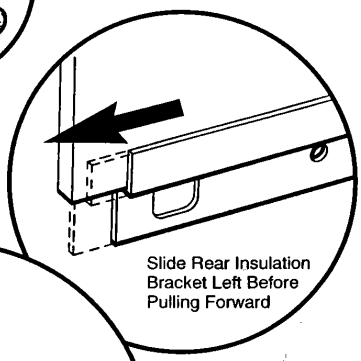

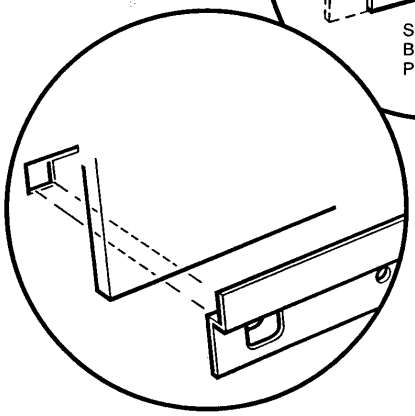

Clean between the heat exchanger fins and flueways with suitable brushes and remove any deposits from the combustion box base tray.

Clean away any lint or other deposits from the boiler hood and builders opening.

Reassemble the insulation in reverse order and refit the baffles.

Reassemble the appliance in reverse order, re-commission the appliance and check for gas soundness.

Complete the relevant section of the “Benchmark” Installation, Commissioning and Service Record Log Book and hand it back to the user.

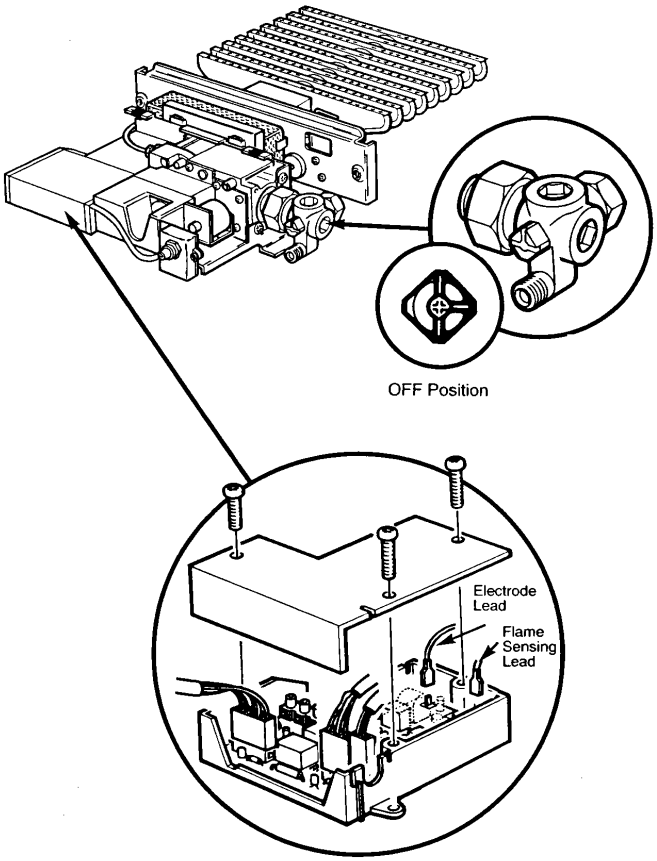

To change any components on the back boiler it is necessary to remove the fire front.

After changing any components carry out gas soundness checks.

Removal of Firefront
Isolate the electrical supply to the appliance and ensure the permanent live (when fitted) has also been isolated.

Turn the gas service tap to the OFF position.

Refer to the separate firefront instructions for the removal of the firefront.

Remove the controls assembly from the boiler as described under “Annual Servicing’.

Flame Sensing Lead

ELECTRONIC CONTROL MODELS

Remove the three screws holding the controls box cover on and remove the electrode lead from its terminal on the PCB and the sensing probe. The lead has a white sleeve at the probe end.

Reassemble in reverse order.

Ignition Lead

ELECTRONIC CONTROL MODELS

Remove the three screws holding the controls box cover on and remove the electrode lead from its terminal on the PCB and the electrode. The lead has a black sleeve at the electrode end.

Reassemble in reverse order.

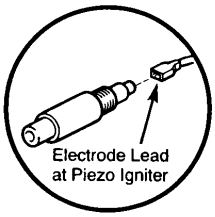

MANUAL CONTROL MODELS

Remove the controls heat shield from its clips if not already done so.

Pull the lead off the spade terminals on the piezo unit and the ASD electrode.

Reassemble in reverse order.

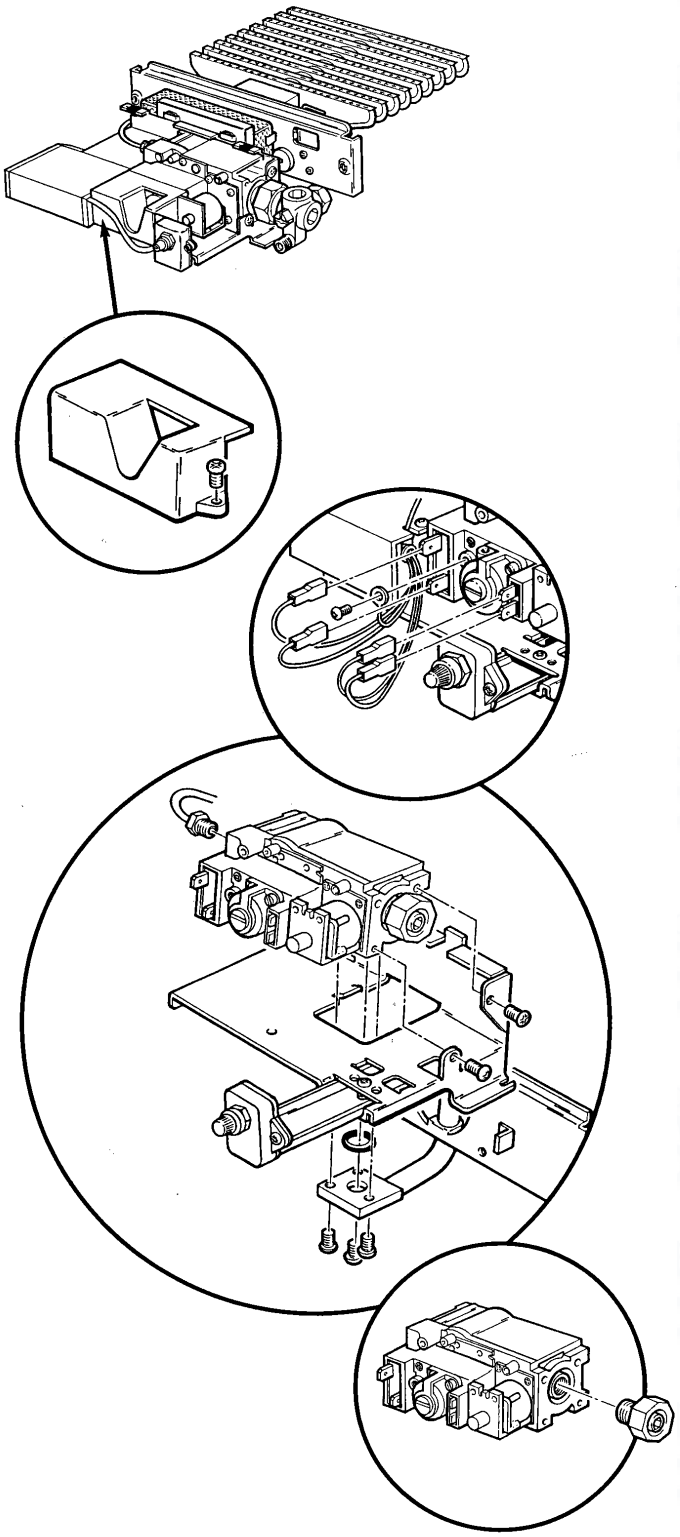

Gas Valve

ELECTRONIC CONTROL MODELS

Remove the screw holding the valve cover to the controls mounting bracket and remove the cover.

Disconnect the electrical connections from the valve, noting the position of each wire.

Remove the two screws holding the valve to the controls mounting bracket adjacent to the union nut and tailpiece.

Undo the pilot feed pipe nut from the valve.

Remove the three screws holding the burner feed pipe to the valve, being careful not to lose or damage the “O” ring seal.

Remove the valve from the controls mounting bracket.

Remove the tailpiece and union nut from the original valve and fit to the new one.

Reassemble in reverse order.

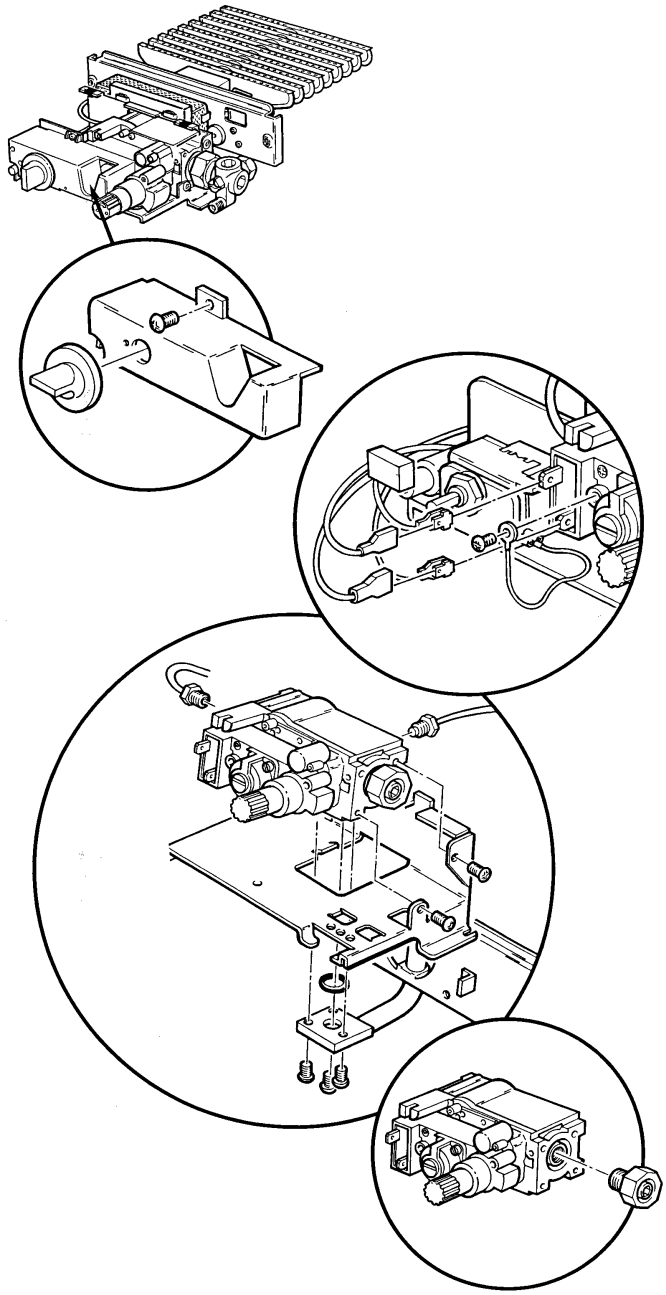

MANUAL CONTROL MODELS

Remove the control knob.

Remove the screw holding the valve cover to the controls mounting bracket and remove the cover.

Disconnect the electrical connections from the valve.

Remove the two screws holding the valve to the controls mounting bracket adjacent to the union nut and tailpiece.

Undo the pilot feed pipe nut and thermocouple from the valve.

Remove the three screws holding the burner feed pipe to the gas valve, being careful not to lose the “O” ring seal.

Remove the valve from the controls mounting bracket.

Remove the tailpiece and union nut from the original valve and fit to the new one.

Reassemble in reverse order.

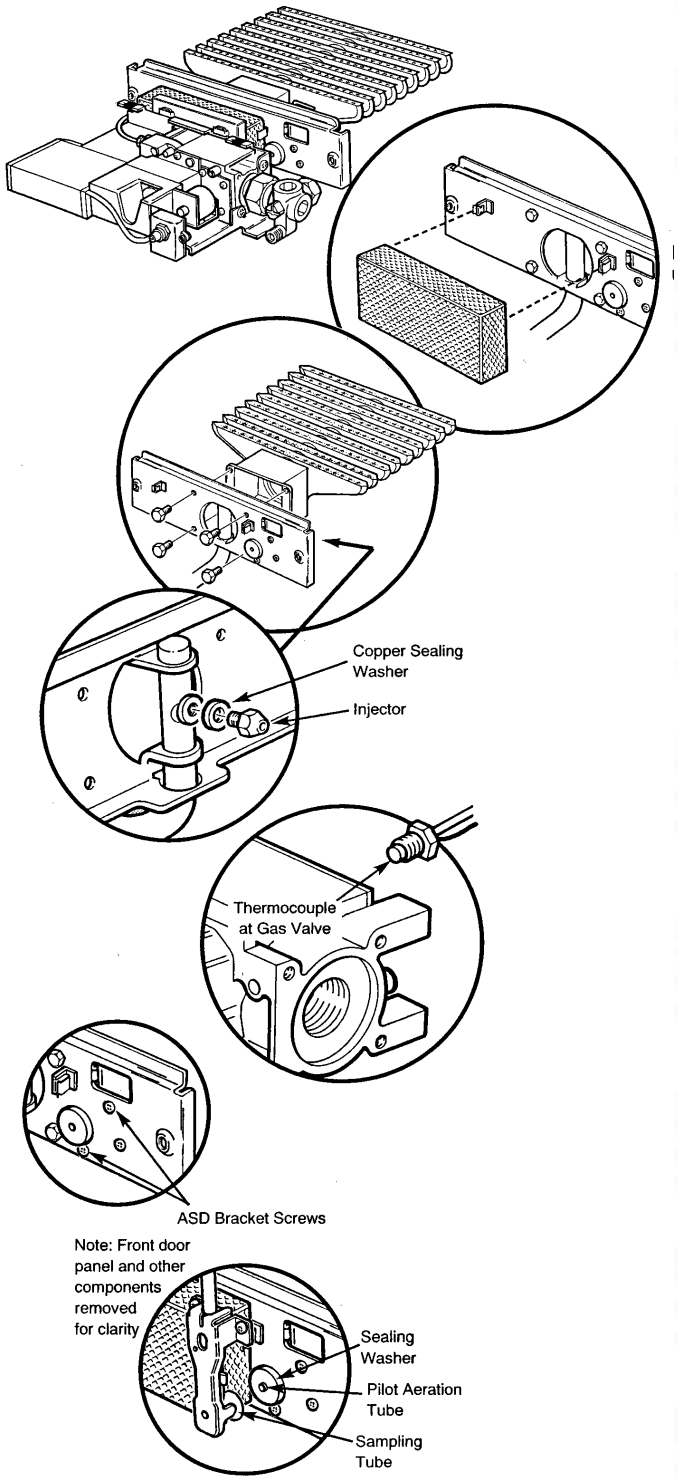

Burner and Main Injector

Remove the lint arrestor.

Remove the four hexagon headed screws holding the burner to the mounting plate.

If required the main injector can be unscrewed from the feed pipe and replaced. The copper sealing washer must be retained for re-use.

Reassemble in reverse order.

Pilot / A.S.D. Assembly

WARNING: The pilot I A.S.D. assembly should not be adjusted in any way.
The A.S.D. must not be altered so that it will not operate or be bypassed in anyway.
The thermocouple cannot be changed as an individual component. The complete assembly must be replaced in the event of one or other component failure(s). Only use a Genuine Baxi Spare Part.

Remove the controls heat shield from its clips if not already done so.

Remove the ASD thermocouple nut at the rear of the valve.

Remove the ignition lead from the ASD electrode (and flame sensing lead on electronic models). Undo the pilot feed pipe at the ASD.

Remove the three screws holding the burner feed pipe flange to the underside of the valve.

Separate the valve and burner assemblies.

Remove the lint arrestor.

Undo the two screws holding the ASD bracket to the burner mounting plate.

Remove the original sealing washer from the burner mounting plate.

Undo the screw holding the ASD to its bracket.

Fit the new ASD to the bracket. When fitting the ASD ensure that the pilot aeration tube engages in its hole in the burner mounting plate.

Ensure that the mounting plate is clean and then peel the adhesive backing paper off the new sealing washer.

Align the hole in the new washer with the pilot aeration tube protruding through the mounting plate.

Reassemble in reverse order.

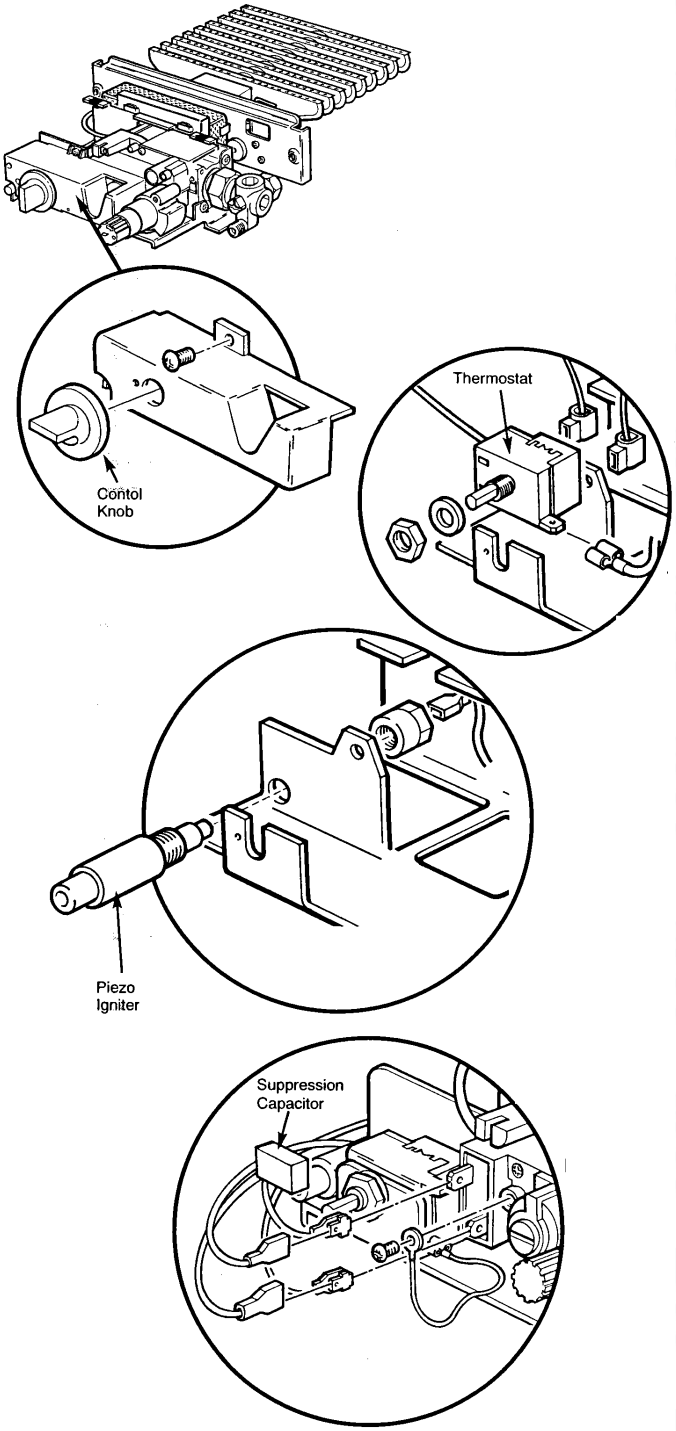

Thermostat

MANUAL CONTROLS ONLY

Remove the control knob. Undo the screw retaining the valve cover and remove the cover.

Undo the locknut retaining the thermostat to the controls mounting bracket. Ease the thermostat away from the bracket and disconnect the electrical connections noting their positions.

Reassemble in reverse order.

Piezo Igniter Unit

MANUAL CONTROLS ONLY

Remove the controls heat shield from its retaining clips if not already done so.

Remove the control knob. Undo the screw retaining the valve cover and remove the cover.

Pull the igniter lead off the piezo and undo the plastic locknut. Remove the piezo igniter unit.

Reassemble in reverse order.

Suppression Capacitor

MANUAL CONTROLS ONLY

The controls may remain in situ but the controls heat shield must be removed from its retaining clips.

Remove the control knob. Undo the screw retaining the valve cover and remove the cover.

Note the positions of the electrical connections on the valve and remove them.

Remove the capacitor connections from the valve

Reassemble in reverse order.

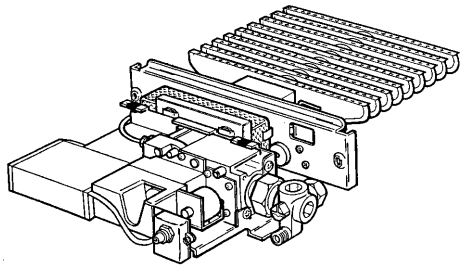

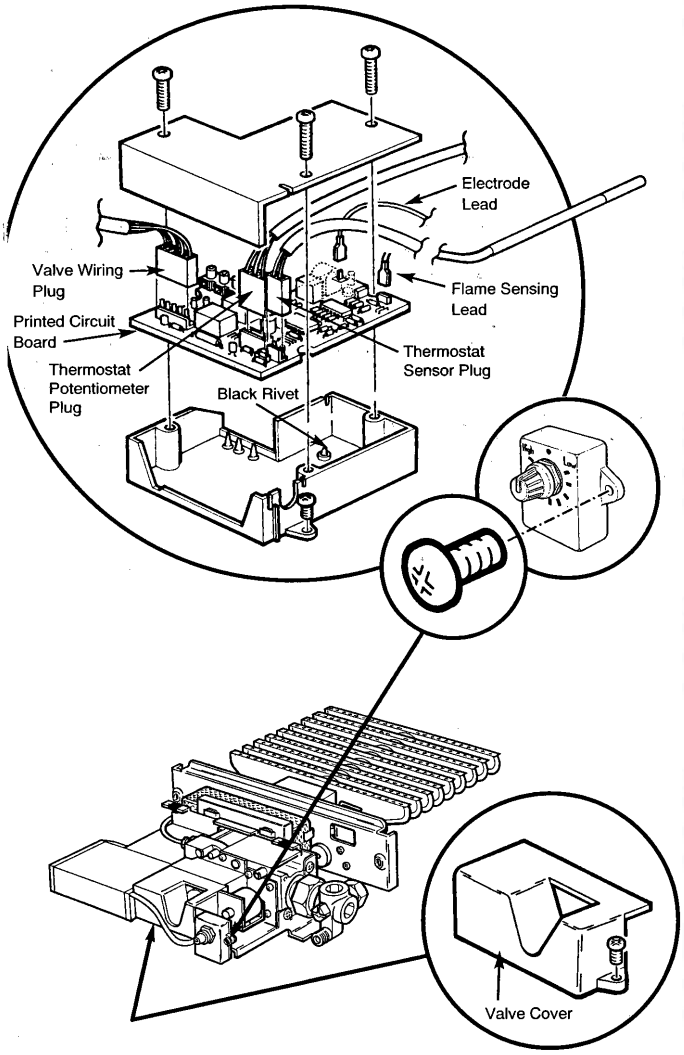

Thermostat Sensor

ELECTRONIC CONTROLS ONLY

Undo the three screws retaining the control box cover and remove the cover.

Disconnect the thermostat sensor plug from the PCB.

Thermostat Potentiometer

ELECTRONIC CONTROLS ONLY

Remove the controls heat shield from its retaining clips if not already done so.

Undo the three screws retaining the control box cover and remove the cover.

Disconnect the thermostat potentiometer plug from the PCB and remove the potentiometer wires from their guide slot in the control box side.

Undo the screw holding the thermostat potentiometer to the controls mounting bracket and remove the potentiometer by disengaging its locating tab.

Reassemble in reverse order.

Printed Circuit Board

ELECTRONIC CONTROLS ONLY

Remove the controls heat shield from its retaining clips if not already done so.

Undo the three screws retaining the control box cover and remove the cover.

Disconnect the three multi-pin plugs, flame sensing lead and ignition lead from the PCB, noting their positions.

Undo the screw retaining the valve cover and remove the cover.

Pull the valve wiring grommet out of the slot in the control box.

Disconnect the lead from the upper solenoid connection.

Undo the screw retaining the control box and remove the box.

Push out the black rivet retaining the PCB.

Fit the new PCB using the rivet.

Reassemble in reverse order.

SHORT PARTS LIST - Page 35

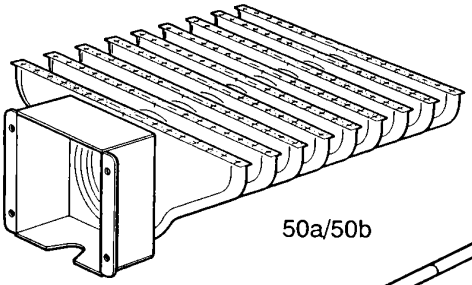

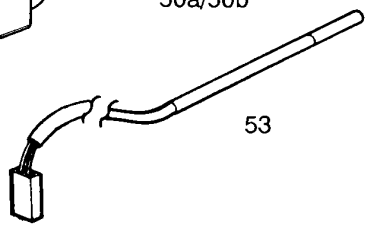

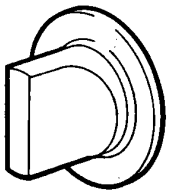

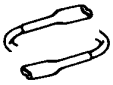

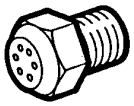

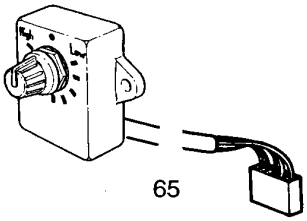

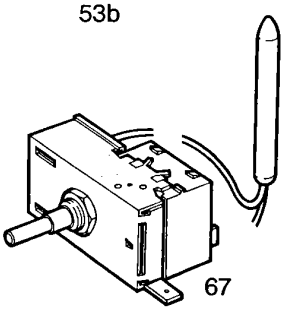

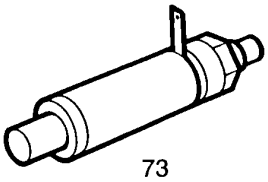

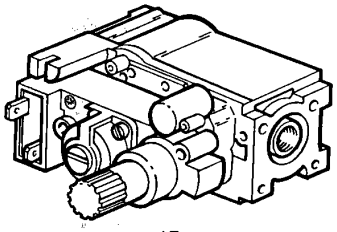

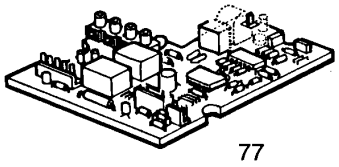

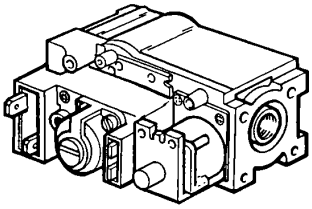

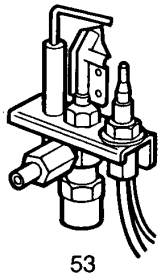

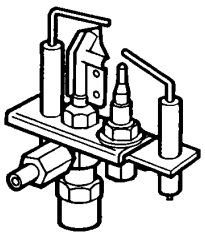

Key No.	G.C. No.	Description	Manufacturers Part No.
73	183 936	Igniter Piezo (M models)	040456
50b	E01-683	Burner - Large Aeromatic AC02/011452	239376
50a	E01-682	Burner Small Aeromatic AC02/01 1453	239355
51a	378 845	Injector Burner 45/4 M Stereomatic B20	234511
35a	378 845	Injector Burner 45/4 E Stereomatic B20	234511
51b	378 846	Injector Burner 57/4 Stereomatic B21	234512
53b	378 846	Injector Burner 57/4 Stereomatic B21	234512
45	193 128	Gas Valve - Manual	236129
45	193 128	Gas valve - Electronic	236579
65	378 847	Potentiometer & Leads (E models)	232219
53	378 844	Sensor Thermostat (E models)	232215
77	E00-118	Printed Circuit Board (E models)	237730
53	E00-132	Pilot / A.S.D. Assembly (M models)	240117
55	E00-133	Pilot / A.S.D. Assembly (E models)	238292
67	378 862	Thermostat -Boiler (M models)	233952
75	364 685	Knob - Thermostat Boiler (M models)	226821
57	E00-121	Lead-Electrode	237811
57	E00-122	Lead-Sensing (E models)	237812

FAULT FINDING 57/4M & 45/4M - Page 36

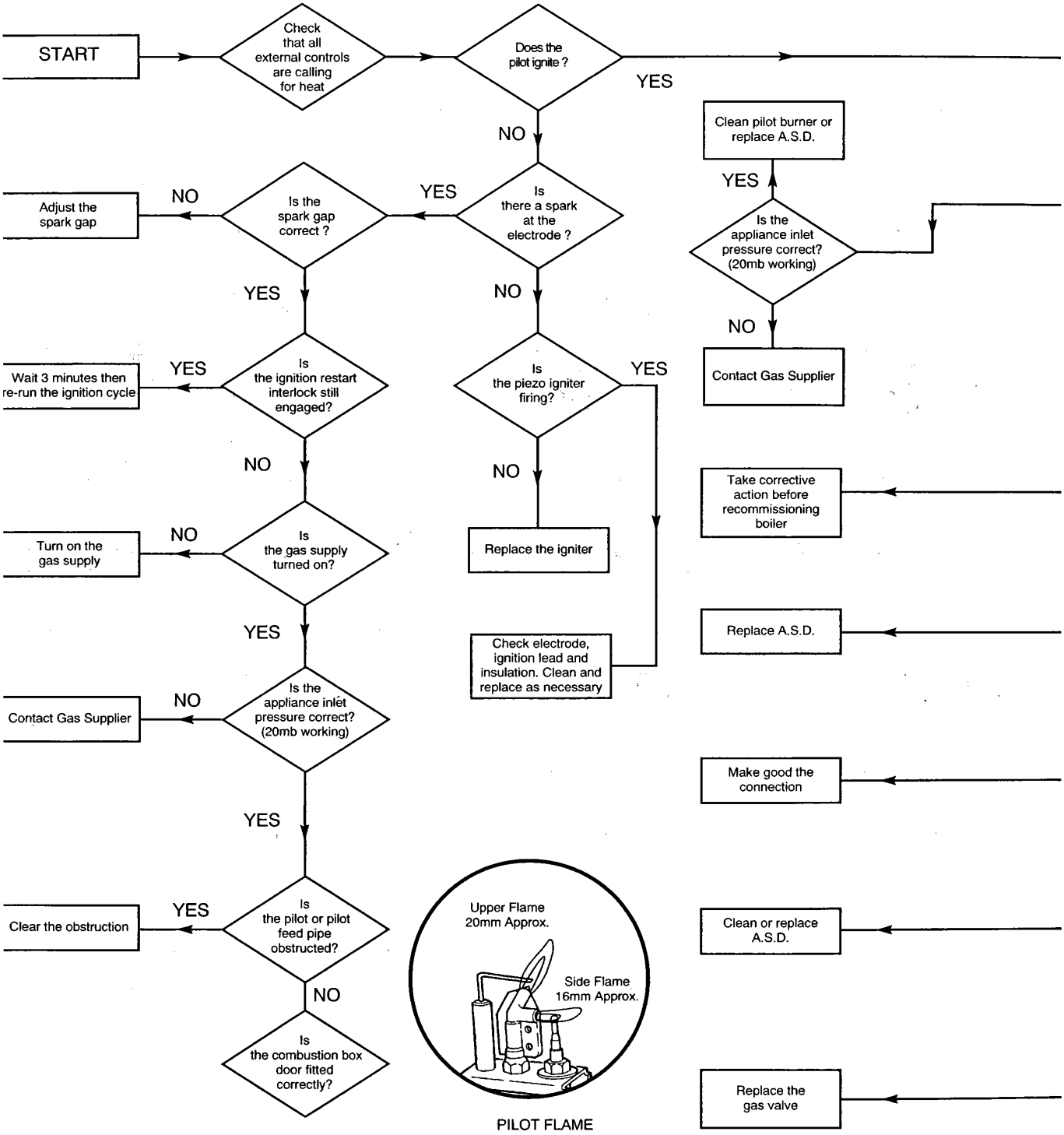

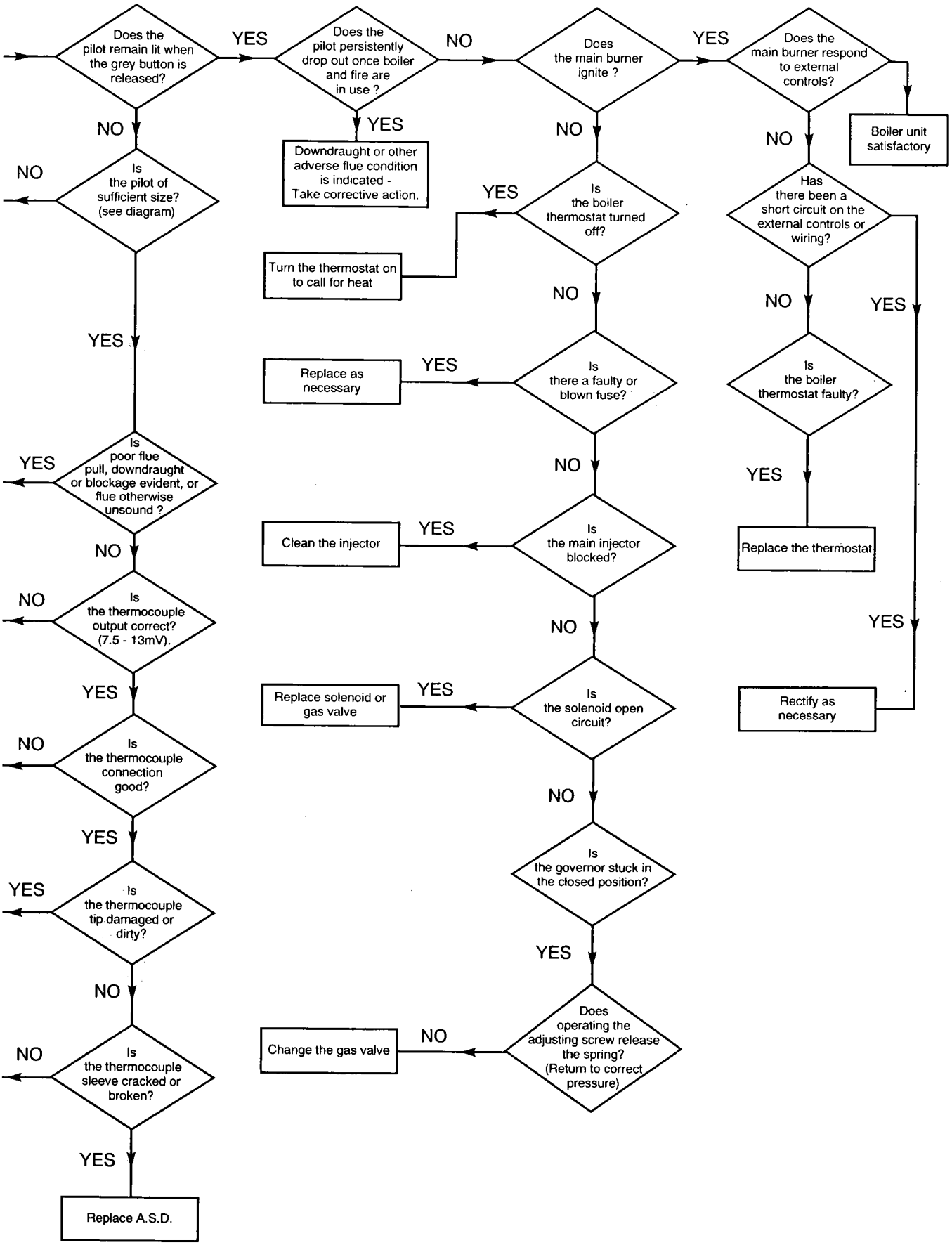
Does the pilot remain lit when the grey button is released?
YES
Does the pilot persistently drop out once boiler and fire are in use ?
NO
Does the main burner ignite ?
YES
Does the main burner respond to external controls?
Boiler unit satisfactory
NO
Downdraught or other adverse flue condition is indicated - Take corrective action.
NO
Is the pilot of sufficient size? (see diagram)
NO
Is the boiler thermostat turned off?
YES
Turn the thermostat on to call for heat
NO
Has there been a short circuit on the external controls or wiring?
NO
YES
YES
Is there a faulty or blown fuse?
YES
Replace as necessary
Is the boiler thermostat faulty?
YES
Replace the thermostat
Is poor flue pull, downdraught or blockage evident, or flue otherwise unsound ?
YES
NO
Is the main injector blocked?
YES
Clean the injector
Is the thermocouple output correct? (7.5 - 13mV).
NO
YES
NO
Is the solenoid open circuit?
YES
Replace solenoid or gas valve
Rectify as necessary
YES
Is the thermocouple connection good?
NO
YES
Is the governor stuck in the closed position?
NO
Is the thermocouple tip damaged or dirty?
YES
YES
Does operating the adjusting screw release the spring? (Return to correct pressure)
NO
Change the gas valve
NO
Is the thermocouple sleeve cracked or broken?
NO
YES
Replace A.S.D.

FAULT FINDING 57/4E & 45/4E - Page 38

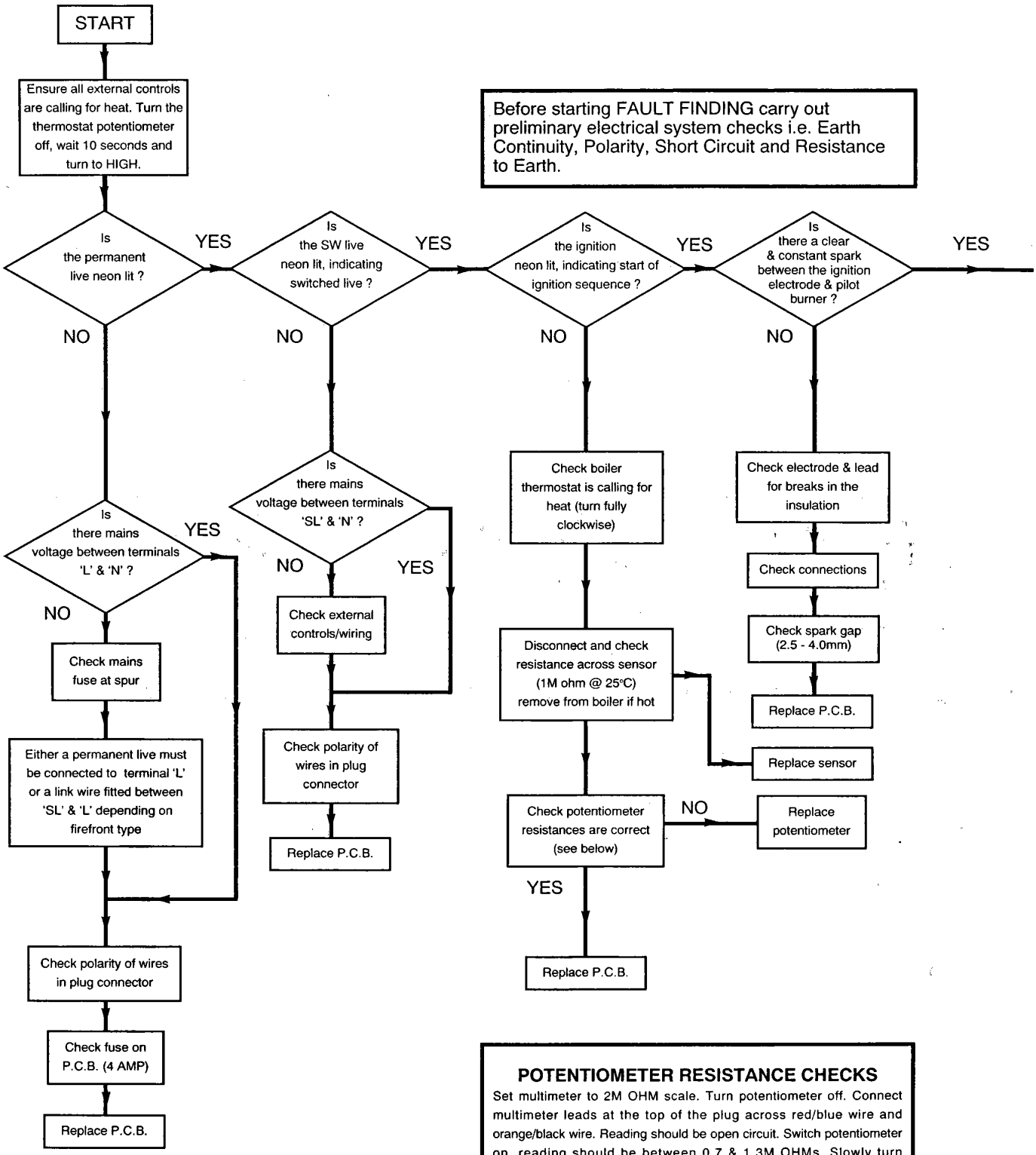

Before starting FAULT FINDING carry out preliminary electrical system checks i.e. Earth Continuity, Polarity, Short Circuit and Resistance to Earth.

POTENTIOMETER PLUG

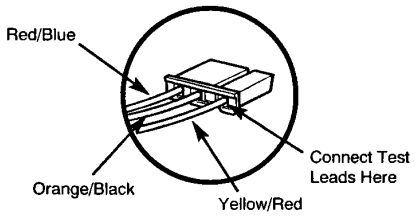

POTENTIOMETER RESISTANCE CHECKS

Set multimeter to 2M OHM scale. Turn potentiometer off. Connect multimeter leads at the top of the plug across red/blue wire and orange/black wire. Reading should be open circuit. Switch potentiometer on, reading should be between 0.7 & 1.3M OHMs. Slowly turn potentiometer to full on; reading should decrease, proportionate to knob position, down to between 0.24 & 0M OHMs.

Connect multimeter leads to orange/black and yellow/red wires. Reading should be between 0.7 & 1.3M OHMs. Slowly turn potentiometer down, reading should decrease, proportionate to knob position, down between 0.2 & 0M OHMs.
Turn potentiometer completely off, reading should be open circuit.

WARNING: Where practicable fault finding should be performed with the main electricity supply ISOLATED.

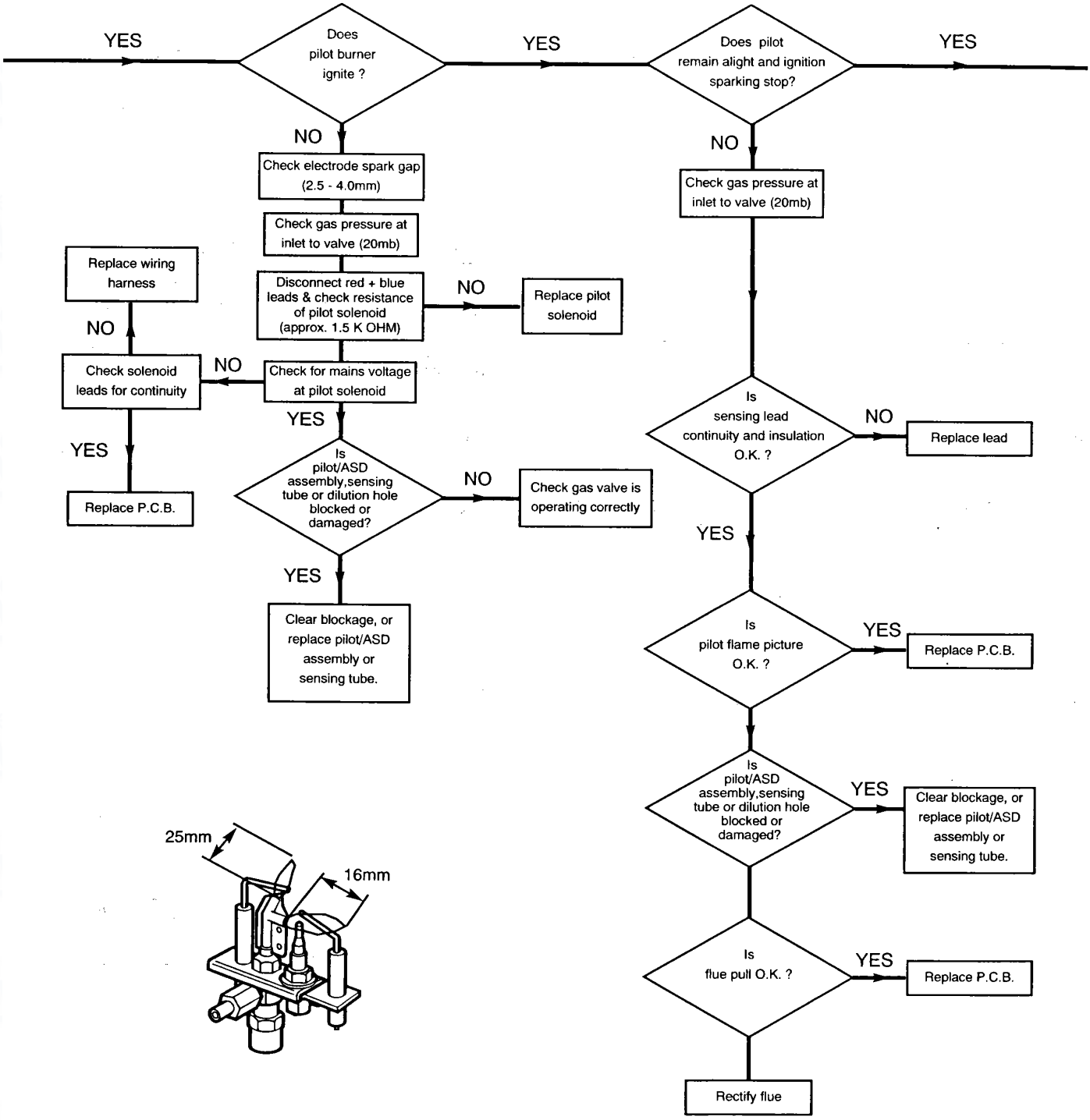

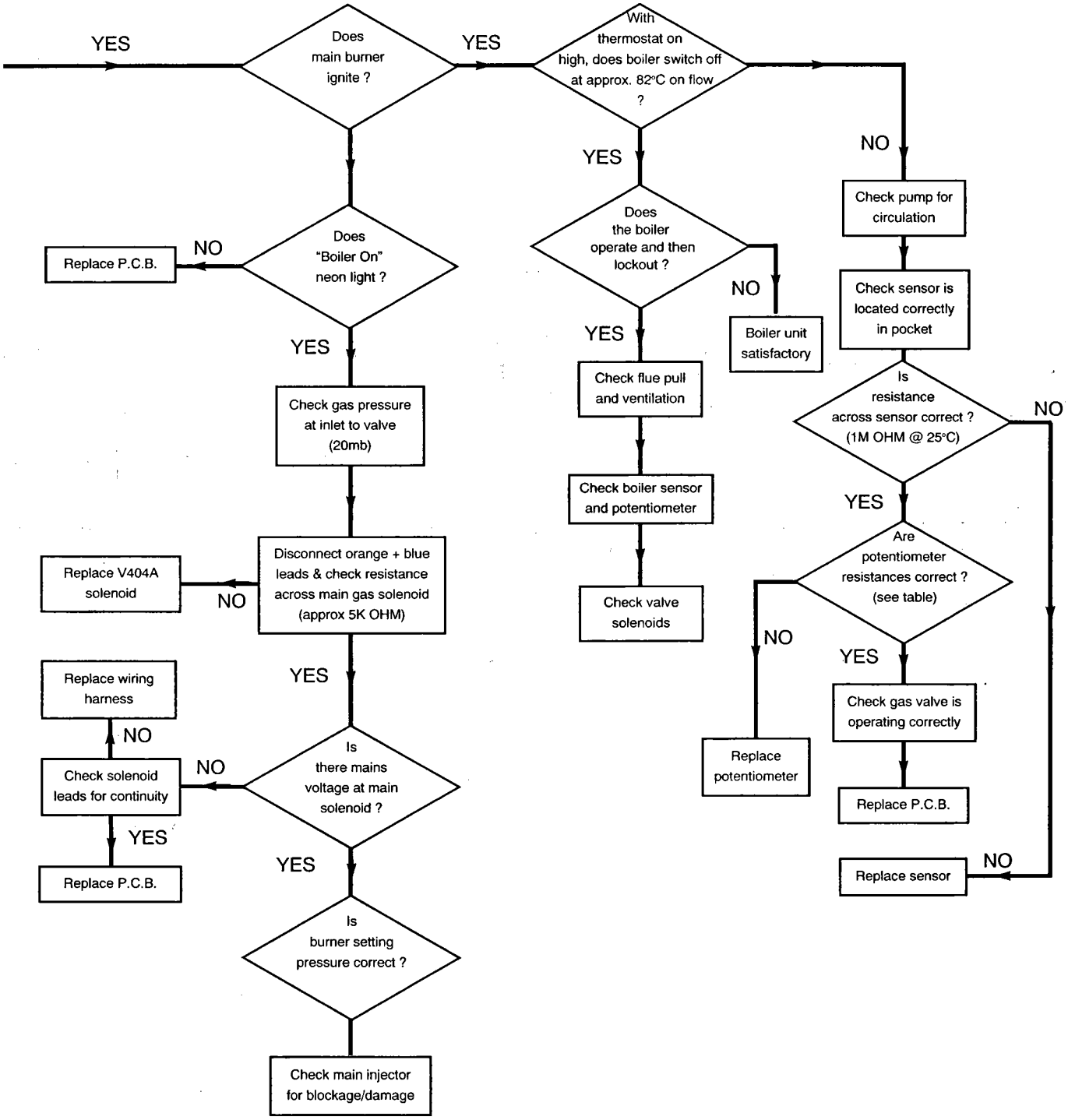

Click here for Helplines