Please leave these instructions with the user

Baxi Bermuda Inset 2 Boiler 50/4 E

Fireside Gas Central Heating Unit

Installation and Servicing Instructions

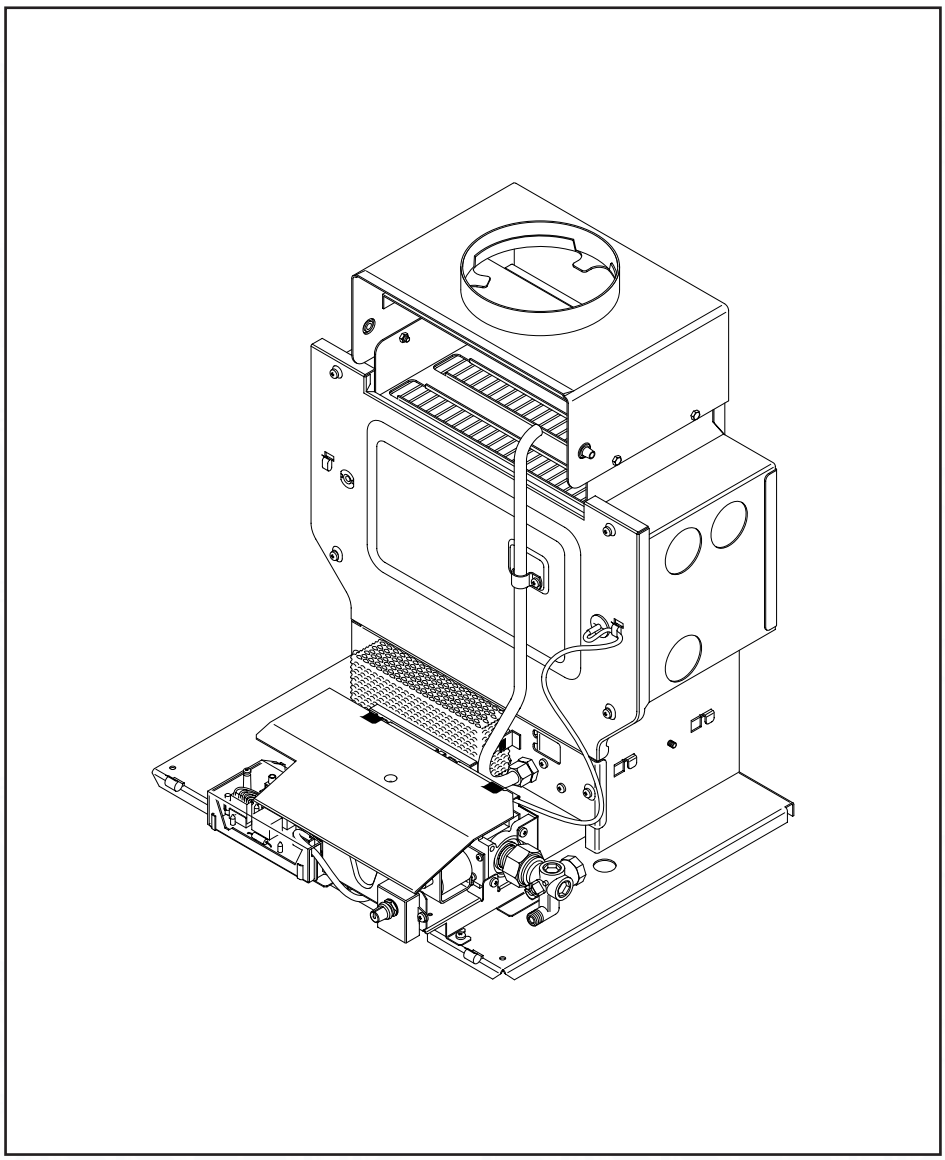

BAXI

spares & parts online IBASIS.CO.UK

Natural Gas

Baxi Bermuda Inset 2 Boiler 50/4 E
G.C.No. 44 075 03

For use with the following firefronts:

Baxi Bermuda Inset 2 BS Super
G.C.No. 37 075 40

Baxi Bermuda Inset 2 TS Super
G.C.No. 37 075 41

Baxi Bermuda Inset 2 KS Super
G.C.No. 37 075 42

Baxi Bermuda Inset 2 FS Super
G.C.No. 37 075 43

Baxi Bermuda Inset 2 CS Super
G.C.No. 37 075 44

Baxi UK Limited is one of the leading manufacturers of domestic heating products in the UK.

Our first priority is to give a high quality service to our customers. Quality is built into every Baxi product - products which fulfil the demands and needs of customers, offering choice, efficiency and reliability.

To keep ahead of changing trends, we have made a commitment to develop new ideas using the latest technology - with the aim of continuing to make the products that customers want to buy.

Baxi is also the largest manufacturing partnership in the country. Everyone who works at the company has a commitment to quality because, as shareholders, we know that satisfied customers mean continued success.

We hope you get a satisfactory service from Baxi. If not, please let us know.

Baxi is a BS-EN ISO 9001
Accredited Company

Contents

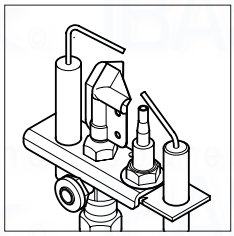

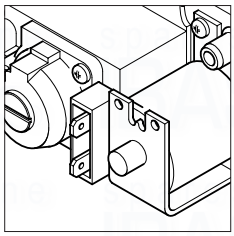

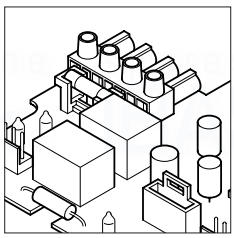

Section		Page
1.0	**Introduction**	4
2.0	**Technical Data**	5
3.0	**System Details**	6
	Water Circulating Systems Treatment of Water Circulating Systems Pipework System Controls Fully Pumped System Storage Systems Pumped Heating & Gravity Hot Water Safety Limit Kit & Sealed Systems	
4.0	**Site Requirements**	9
	Builders Opening Location Fireplace Opening & Surround Frame Extension Kit Flue Ventilation Gas Supply Electrical Supply	
5.0	**Electrical**	12
6.0	**Installation**	13
	Initial Preparation Right Hand Water Connections Connecting the Sensing Pipe Fitting the Boiler Hood Siting the Boiler Securing the Boiler Water Connections Fully Pumped Systems Pumped Heating & Gravity Hot Water Gas Connection Electrical Connection Making the Electrical Connection Flue Connection Completion	
7.0	**Commissioning the Appliance**	18
8.0	**Annual Servicing**	19
	Annual Servicing Removal of Firefront Removal of Controls Cleaning the Lint Arrestor Cleaning the Burner & Main Injector Cleaning the Pilot/A.S.D. Assembly Cleaning the Heat Exchanger	
9.0	**Changing Components**	22
	Changing Components Removal of Firefront Lint Arrestor Suppression Capacitor Thermostat Piezo Igniter Unit Removal of Controls Gas Valve Burner & Main Injector Pilot/A.S.D. Assembly Ignition Lead	
10.0	**Fault Finding**	26
11.0	**Short Parts List**	29
12.0	**Notes**	30

1.0 Introduction

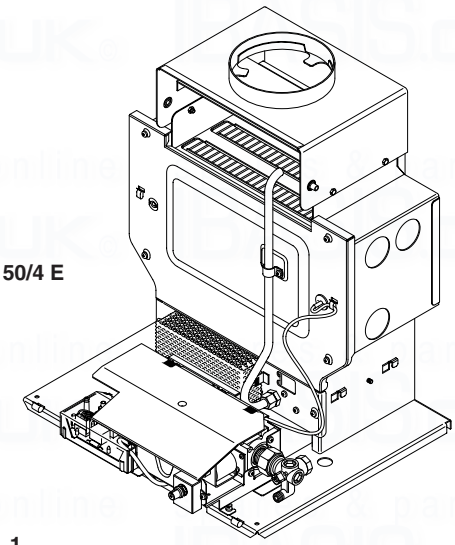

Baxi Bermuda Inset 2 Boiler 50/4 E

Fig. 1

1.1 Description

1. The Baxi Bermuda Inset 2 is a combined central heating boiler and gas fire designed for installation within a builders opening in the living space of a dwelling.

2. The firefront is intended for hearth mounting.

3. These instructions relate to the central heating boiler section of the appliance (Fig. 1).

4. The boiler is range rated, with outputs as shown:

	HEAT OUTPUT		
Model	Max	Mid	Min
50/4 E	14.65kW (50,000 Btu/h)	13.19kW (45,000 Btu/h)	11.72kW (40,000 Btu/h)

5. The appliance is preset at its MIDRANGE heat input rate and is designed for use on NATURAL GAS only. The boiler is suitable for fully pumped and pumped central heating with gravity hot water systems.

6. Sealed System applications require an optional safety limit thermostat kit (Baxi Part No. 245947).

The boiler meets requirements of Statutory Instrument "The Boiler (Efficiency) Regulations 1993 N° 3083" and is deemed to meet the requirements of Directive 92/42/EEC on the efficiency requirements for new hot water boilers fired with liquid or gaseous fuels.

Type test for purpose of Regulation 5 certified by: Notified Body 0086.

Product/production certified by: Notified Body 0086.

1.2 Installation

1. The appliance is suitable for installation only in G.B. and I.E. and should be installed in accordance with the rules in force. For Ireland install in accordance with I.S. 813 "Installation of Gas Appliances".

2. The installation must be carried out by a CORGI Registered Installer or other competent person and be in accordance with the relevant requirements of Gas Safety (Installation and Use) Regulations, the Building Regulations (Scotland) (Consolidation), the Local Building Regulations, the Current I.E.E. Wiring Regulations and the bye laws of the Local Water Undertaking. Where no specific instructions are given, reference should be made to the relevant B.S. CODES OF PRACTICE.

3. **All systems must be thoroughly flushed and treated with inhibitor (see section 3.2).**

"Benchmark" Log Book

As part of the industry-wide "Benchmark" initiative all Baxi boilers now include an Installation, Commissioning and Service Record Log Book. Please read the Log Book carefully and complete all sections relevant to the appliance and installation. These include sections on the type of controls employed, flushing the system, burner operating pressure etc. The details of the Log Book will be required in the event of any warranty work. Also, there is a section to be completed at each subsequent regular service visit.

1.3 B.S. Codes of Practice

STANDARD	SCOPE
B.S. 6891	Gas Installation.
B.S. 5546	Installation of hot water supplies for domestic purposes
B.S. 5449	Forced circulation hot water systems.
B.S. 6798	Installation of gas fired hot water boilers.
B.S. 5440: Pt 1	Flues.
B.S. 5440: Pt 2	Air Supply.
B.S. 5871: Pt 1	Installation of fire/back boilers, gas appliances.
B.S. 6500	Cables.

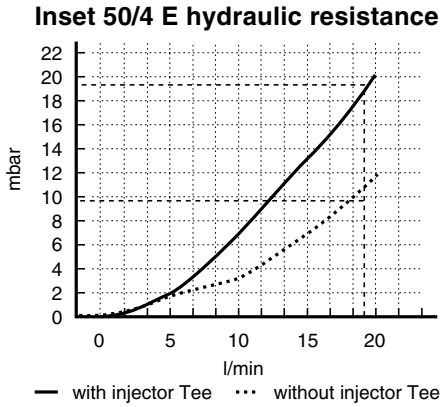

Fig. 2

Sedbuk Declaration For Bermuda Inset 2 50/4 E

The seasonal efficiency (SEDBUK) is 76.1%

This value is used in the UK Government's Standard Assessment Procedure (SAP) for energy rating of dwellings. The test data from which it has been calculated has been certified by 0086.

Bermuda Inset 2 Boiler 50/4 E

The Boiler is for use with Natural Gas only.

Heat Input	Max	Mid	Min
kW	18.79	17	15.2
Btu/h	64,100	58,070	51,850
Heat Output	Max	Mid	Min
kW	14.65	13.19	11.72
Btu/h	50,000	45,000	40,000
Burner Pressure	Max	Mid	Min
mbar	17	14	11
in wg	6.8	5.6	4.4
Water Content	Max		
litres	1.6		
gallons	0.35		
Gas Connection	R_C ½ (½ in BSPT)		
Water Connections	3 x 1in BSP		
Electricity Supply	230V ~ 50Hz External fuse - 5 Amp Appliance Rating - 17 watt		
Controls	Electronic thermostat intermittent pilot & timed electronic flame sensing with atmospheric sensing device.		
Gas Rate (after 10 mins)	1.8m³/h (63.57ft³/h)		
Lifting Weight	33.2 kg (73.2 lbs)		
Dimensions	Height	516mm	
	Width	440mm	
	Depth	368mm	
Flue Diameter			
mm	125		
in	5		
Heat Exchanger	Cast Iron		
Low Head	(Min)		
mm	1000		
in	39⅜		
Water Systems	Fully pumped or pumped heating with gravity hot water. Sealed system with optional safety limit thermostat.		

3.1 Water Circulating Systems

1. The appliance is suitable for open vented systems which are either fully pumped or pumped central heating with gravity domestic hot water.

2. **The following conditions should be observed at all times:**

- The static head must not exceed 30m (100ft) of water.
- The boiler must not be used with a direct cylinder.
- Drain cocks should be fitted to all system low points.
- All gas and water pipes and electrical wiring must be installed in such a way that they do not restrict the servicing of the boiler.
- Position isolating valves as close as possible to the circulating pump.

3.2 Treatment of Water Circulating Systems

For optimum performance after installation, this boiler and its associated central heating system must be flushed in accordance with the guidelines given in BS7593:1992 “Treatment of water in domestic hot water central heating systems”.This must involve the use of a proprietary cleanser, such as BetzDearborn’s Sentinel X300 or X400, or Fernox’s Superfloc.

Full instructions are supplied with the products, but for immediate information please contact BetzDearborn (0151 420 9563) or Fernox (01799 550811).

For long term protection against corrosion and scale, after flushing it is recommended that an inhibitor such as BetzDearborn’s Sentinel X100, or Fernox’s MB-1 or Copal is dosed in accordance with the guidelines given in BS7593:1992.

Failure to flush and add inhibitor to the system may invalidate the appliance warranty.

It is important to check the inhibitor concentration after installation, system modification and at every service in accordance with the manufacturer’s instructions. (Test kits are available from inhibitor stockists.)

For information or advice regarding any of the above contact the Baxi Helpline.

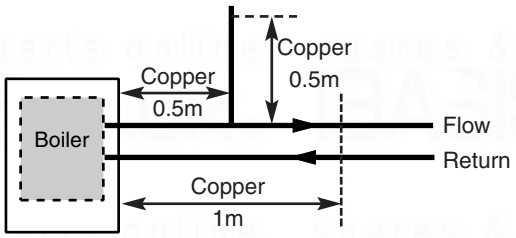

Fig. 2a

3.3 Pipework

1. The sizes of the flow and return pipes from the boiler should be determined by normal methods according to the requirements of the system.

2. It is recommended that the system is designed for an 11°C (20°F) drop in temperature across the system.

3. In systems using non-metallic pipework it is necessary to use copper pipe for the boiler Flow and Return. The copper must extend at least 1 metre from the boiler and include any branches. The copper pipe must not be insulated (Fig. 2a).

3.4 System Controls

1. For optimum operating conditions, the system in which the appliance is installed should include a control system.

2. Such a system would comprise a timer control and a separate room and/or cylinder thermostat as appropriate.

3. The boiler should be controlled so that it operates on demand only.

4. It is not economical to rely on the boiler thermostat to control operation of the system.

3.5 Fully Pumped System (Fig. 3)

1. The sizes of the system pipes should be determined by normal methods.

2. The open vent pipe should be a minimum of 22mm and must rise continuously to a point above the feed and expansion tank.

3. The flow pipe from the boiler may form part of the vent pipe. No part of the open vent should contain a valve.

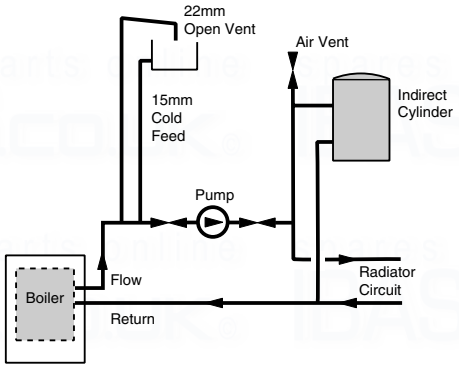

Fully Pumped System

Fig. 3

3.6 Storage Systems

1. For information regarding the use of a Bermuda Inset 2 boiler with a storage system, contact the appropriate storage system manufacturer.

3.7 Pumped Heating & Gravity Hot Water (Fig. 4)

1. The sizes of system pipes should be determined by normal methods.

2. The gravity flow pipe should rise vertically as close as possible to the boiler, avoiding sharp bends and tight elbows.

3. The open vent pipe should be a minimum of 22mm and must rise continuously to a point above the feed and expansion tank.

4. The flow pipe from the boiler may form part of the vent pipe.

5. No part of the open vent should contain a valve.

6. **The brass injector tee must be fitted to the boiler return on all systems incorporating a gravity circuit.**

7. The circulating head should not be less than 1m (3ft) with a maximum horizontal run of 3m (10ft) when using 28mm pipes. Smaller pipe sizes and longer horizontal runs are acceptable with suitably increased circulating heads.

8. The gravity circuit should be designed with a minimum of restriction, avoiding possible air traps and long horizontal runs.

9. The system should be designed to prevent gravity circulation in the heating system when the pump is not running.

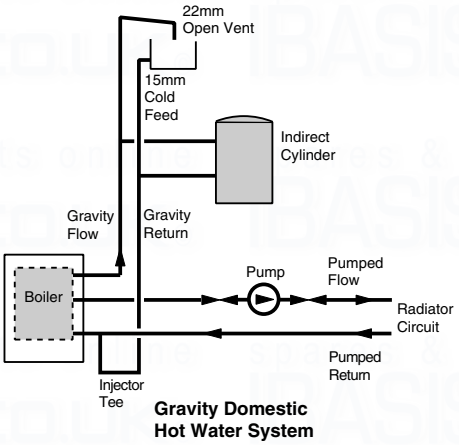

Fig. 4

3.8 Safety Limit Kit & Sealed Systems

1. A safety limit thermostat kit is available to facilitate the installation of a Bermuda Inset 2 boiler to systems incorporating a combined feed and vent and to flats and dwellings where the building design prevents the boiler vent pipe rising continuously to the feed and expansion tank. (This must not be used on gravity systems.) Baxi Part N° 245947.

2. The boiler can be applied to a sealed system with the use of the safety limit kit.

3. Information regarding the application of the safety limit thermostat is included with the kit.

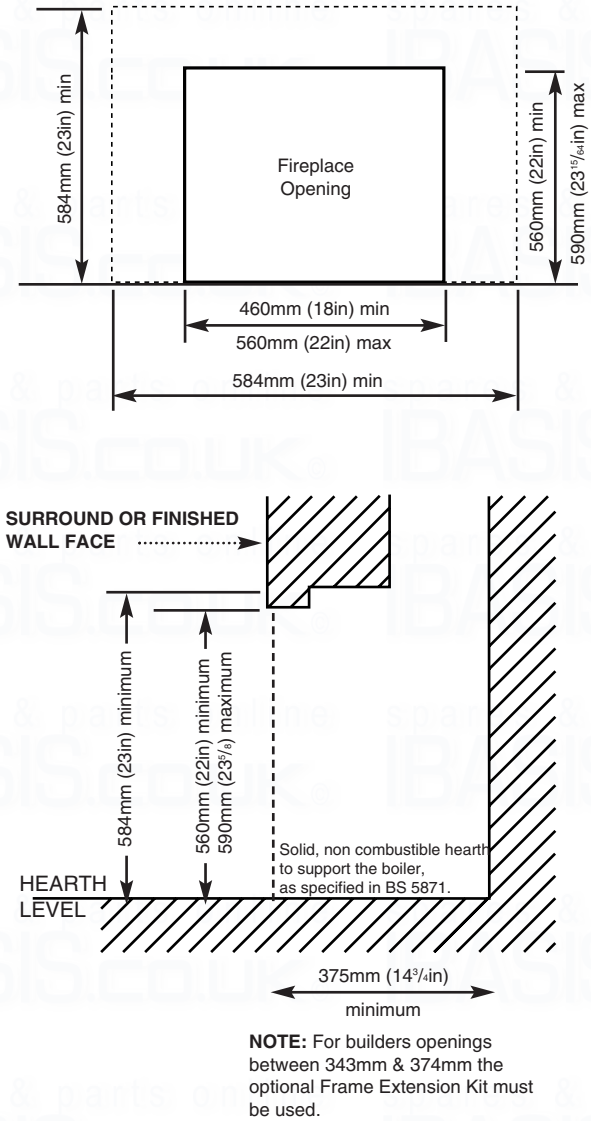

When correctly installed the centre line of the boiler flue socket will be 260mm from the surround or finished wall face.

Fig. 5

4.1 Builders Opening (Fig. 5)

1. The boiler unit is designed to fit within a standard builders opening, the minimum dimensions of which are as shown.

Height	584mm (23in)
Width	584mm (23in)
Depth	375mm (14 3/4in)

2. The opening should be soundly constructed of brick, pre-cast concrete or be a proprietary builders opening.

3. **The base of the opening should be sound and non-combustible and must be flat and level.**

4. The base of the builders opening should be at the same height as the finished level of the hearth.

IMPORTANT: If a false chimney breast is intended to house the boiler, a simulated builders opening, within the breast, must be provided.

5. The builders opening must not communicate with voids, pipe ducts or spaces other than the room in which the appliance is situated.

4.2 Location

1. The appliance must be installed in the living space of a dwelling.

2. Restrictions to the siting of the appliance are covered by BS 5546. The appliance may not be installed in bathrooms, shower rooms, bedrooms or bed sitting rooms.

4.3 Fireplace Opening & Surround

1. If a fireplace surround is to be used, it must be centrally placed and have opening sizes and a vertical flat area as detailed in the Installation and Servicing Instructions for the fire.

4.4 Frame Extension Kit

1. If the depth of the builders opening is less than the 375mm minimum specified, it can be increased by the use of the Frame Extension Kit.

2. Kit N° 234887 is suitable for use with Inset 2 TS, BS and FS models.
For Inset 2 KS & CS, Kit N° 239341 must be used.

3. Full installation details are included in the kit.

4.5 Flue

1. The flue installation must conform to BS 5440 Pt 1. The flue must have a minimum vertical height of 3m (10ft) and have a minimum internal cross section area of 12,700 mm^2 (20in^2), this is satisfied by a flue of 125mm (5in) internal diameter.

A suitable terminal is required for all installations.

2. 9in X 9in Brick
Flues previously used for other fuels must be thoroughly swept. The flue must be lined with a 125mm (5in) flexible liner. The bottom of the liner should terminate 500mm (20in) above the base of the builders opening. The flue must be sealed between the liner and the brickwork at both the top and bottom.

3. Acid Resistant Liner
A flue constructed of acid resistant liners is satisfactory provided the size requirements are met. The boiler flue outlet can be connected to the flue by means of a short length of 125mm (5in) of flue pipe. A seal must be made in the annular space between the outer face of this flue pipe and the acid resistant liner.

4. Precast Flues
These must conform to BS 5440 Pt 1 and be correctly installed without intrusion of cement into the flue passage.

5. Proprietary Flues
A flue of this type must meet the size requirements specified and be installed in accordance with the flue manufacturers recommendation and relevant codes of practice.

An approved terminal must be installed.

4.6 Ventilation

1. Ventilation air supply to BS 5440 Pt 2 is required. The permanent ventilation area size requirements are as shown:

80.1cm² (12.42in²)

2. The permanent vent may be directly into the room containing the appliance. The vent may also be sited in another (not a bedroom, toilet, bathroom or kitchen) room provided an interconnecting vent is used.

3. The vent must not be installed inside the builders opening. The vent should be sited following good practise for a habitable room. We recommend the use of the Stadium BM720 “Black Hole” ventilator which is available from your local merchant.

4.7 Gas Supply (Fig. 6)

1. The gas installation should be in accordance with BS 6891. The connection at the appliance is Rc ½ (½in BSPT internal) located at the rear of the gas cock.

2. Ensure the pipework from the meter to the appliance is of adequate size. It is necessary to route the gas supply pipe to the right hand side of the builders opening. It must be routed so as not to restrict the installation and servicing of the appliance.

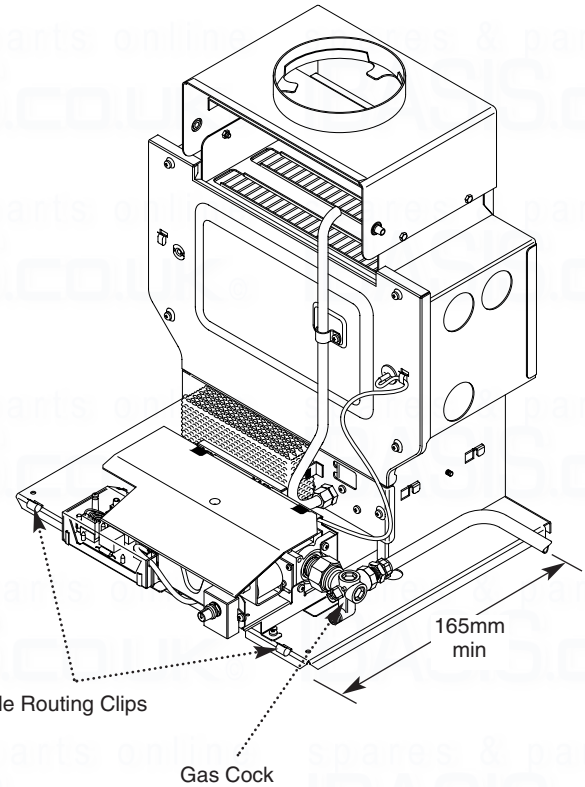

Fig. 6

4.8 Electrical Supply

1. External wiring must be correctly earthed, polarised and in accordance with current IEE wiring regulations. The mains supply is 230V ~ 50Hz fused at 5A. **A permanent live supply is required for all Super Model Firefronts.**

> **NOTE:** The method of connection to the electrical supply must facilitate complete electrical isolation of the appliance. Connection may be made via a fused double pole isolator with a contact separation of at least 3mm on all poles and serve the appliance and system controls only.

2. The cable within the builders opening should be 0.75mm² to IEC 53 code 227 (heat resistant).

3. It is preferable to route the electrical supply cable to the left hand side of the builders opening. If however it must come from the right hand side it must be routed via the clips provided and not restrict the servicing of the appliance (Fig. 6).

4. The cable must be routed to avoid contact with the metal combustion box and hood.

5.1 Illustrated Wiring Diagram

Key

b - blue
r - red
p - pink
w - white
or - orange
g/y - green & yellow
or/bk - orange & black
r/b - red & blue
y/r - yellow & red

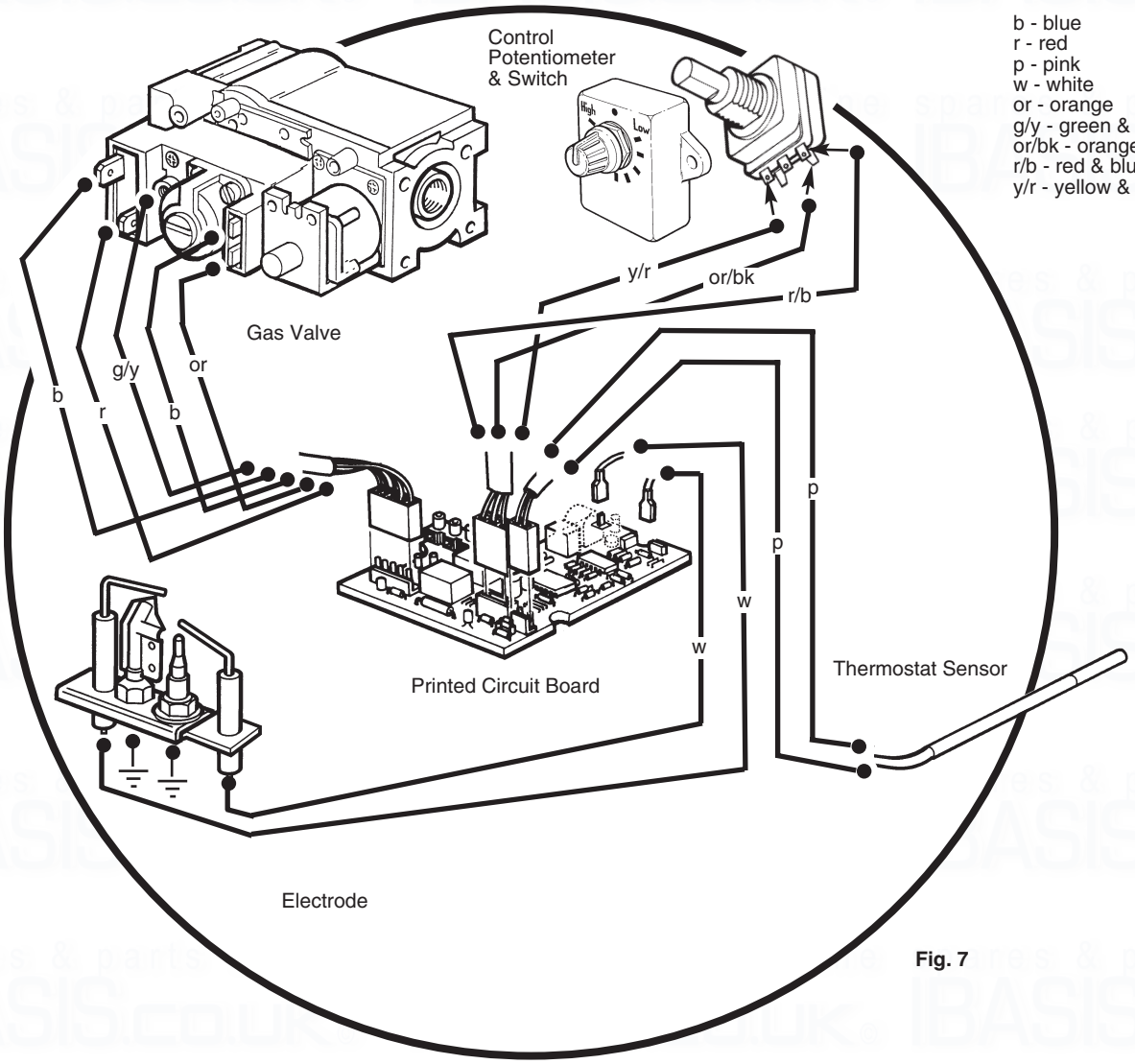

Fig. 7

5.2 Functional Flow Diagram

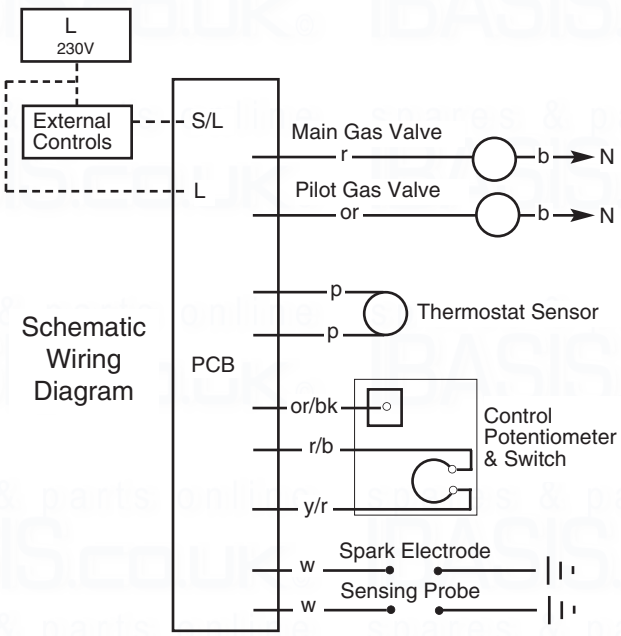

Fig. 8

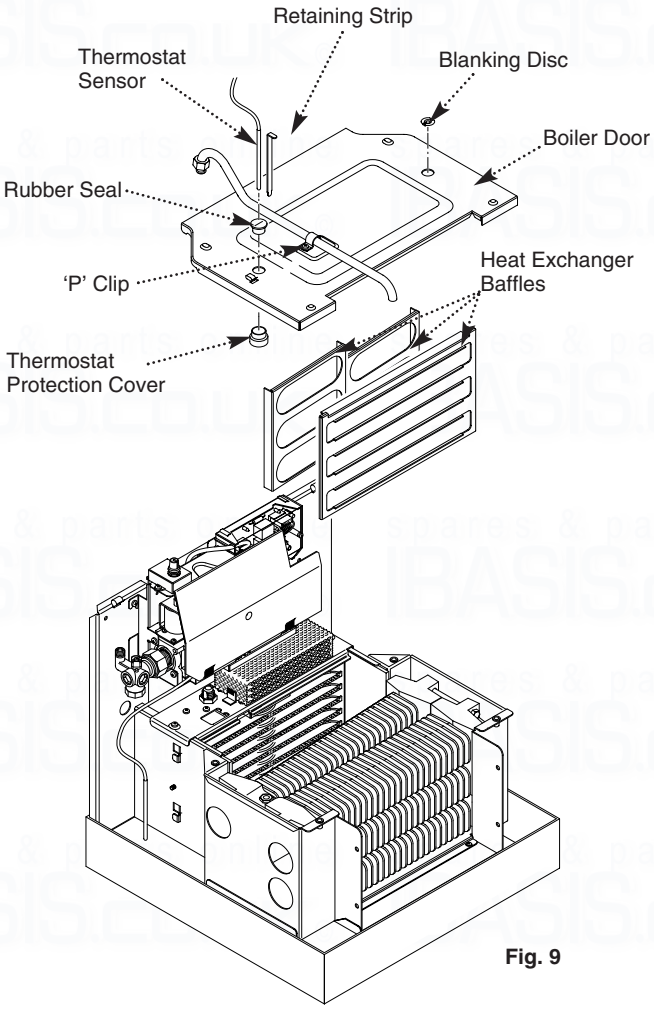

Fig. 9

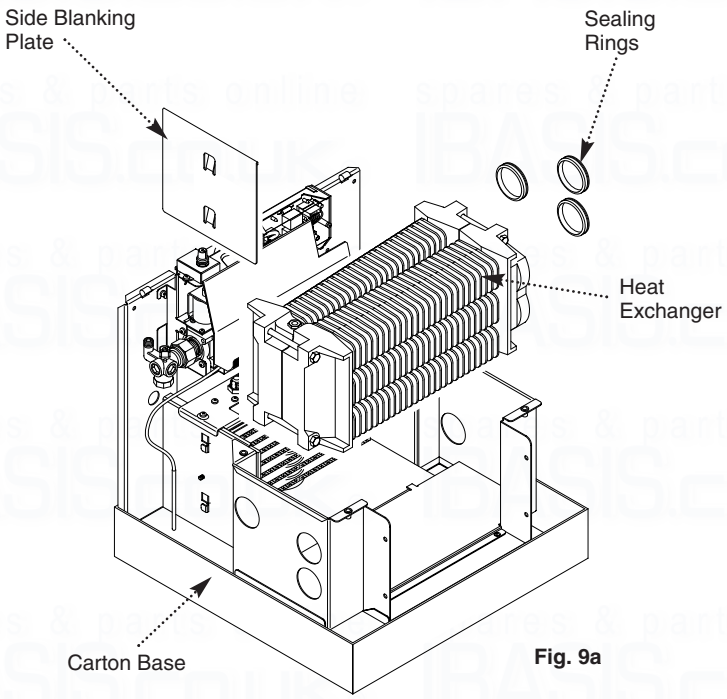

Fig. 9a

6.1 Initial Preparation

1. Remove the outer carton from the boiler pack. Discard the packing pieces. Remove the boiler hood and fitting kit from it's packing on top of the boiler.

2. The boiler as supplied has the flow and return water connections at the left hand side of the appliance. If this is the required orientation, go to section 6.3.

6.2 For installations requiring the water connections at the right hand side proceed as follows (Fig. 9 & 9a):

1. Leave the boiler on its back on the carton base.

2. Remove the thermostat lead from its clip. Withdraw the thermostat sensor and its retaining strip from the pocket.

3. Unfasten the four screws retaining the boiler door and remove. Remove the rubber seal and thermostat protection cover.

4. Lift out the 3 heat exchanger baffles, noting their orientation (they are marked 'TOP' and 'FRONT').

5. Lift the heat exchanger from the appliance and remove the side blanking plate.

6. Transfer the 3 sealing rings from the holes in the left hand side of the boiler to those on the right.

7. Rotate the heat exchanger to place the water connections at the right hand side, return the heat exchanger to the combustion box.

DO NOT TURN THE HEAT EXCHANGER UPSIDE DOWN

NOTE: The heat exchanger is correctly oriented when the three water connections line up with the holes in the right hand side of the combustion box and the thermostat pocket aligns with the corresponding hole in the door. The unfinned heat exchanger water tubes face the burner.

8. Remove the blanking disc from the left hand hole in the boiler door and replace with the rubber seal and thermostat protection cover. Fit the blanking disc into the right hand hole.

9. Replace the heat exchanger baffles and blanking plate. Refit boiler door. Refit the thermostat sensor and its retaining strip into the pocket.

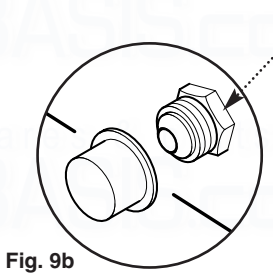

Fig. 9b

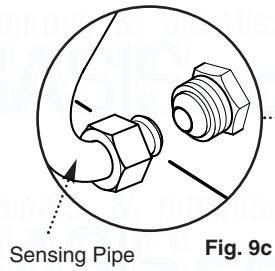

Fig. 9c

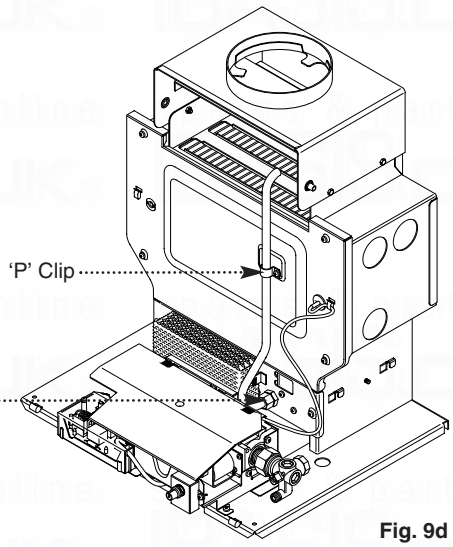

Fig. 9d

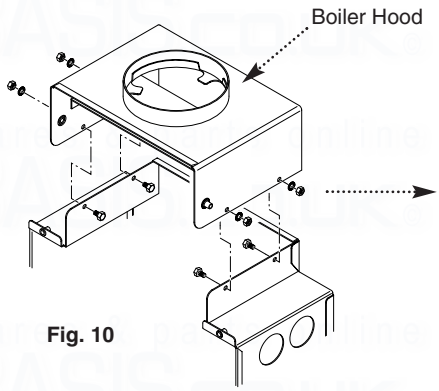

Fig. 10

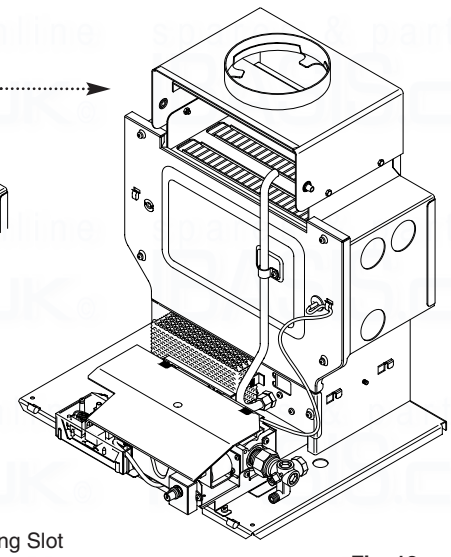

Fig. 13

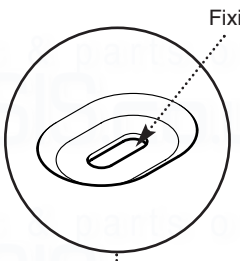

Fig. 14

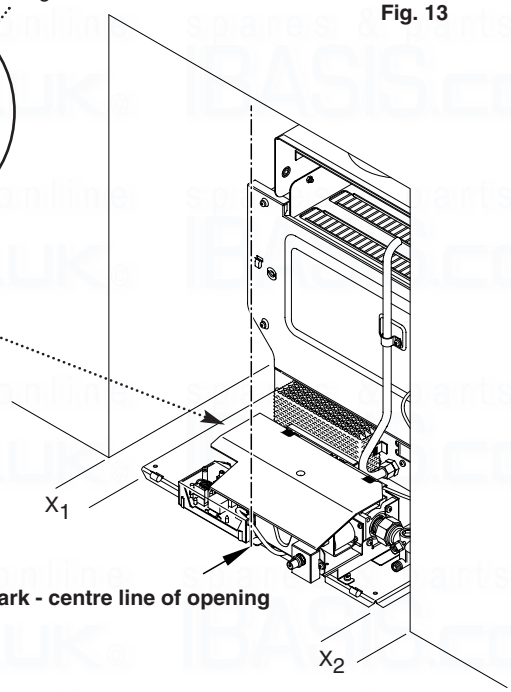

Fig. 15

NOTE: X_1 and X_2 must be equal

6.3 Connecting the Sensing Pipe

1. Remove the protection cap from the sensing pipe adaptor on the burner mounting plate. Slacken the screw retaining the sensing pipe 'P' clip (Fig. 9b, 9c & 9d).

2. Manouevre the pipe so that the flared end aligns with the adaptor. Engage the nut on the adaptor and tighten finger tight. Tighten the 'P' clip retaining screw and tighten the nut onto the adaptor using a suitable spanner (Fig. 9c & 9d).

IMPORTANT: The sensing pipe must be connected to enable the appliance to function safely and correctly.

6.4 Fitting the Boiler Hood

1. Stand the boiler upright on the carton base.

2. The hood may be fitted now or when the boiler is in situ. Secure using the four nuts and set screws provided (Fig. 10).

3. If a safety limit thermostat is required, it may be convenient to fit it at this point of the installation.

6.5 Siting the Boiler

1. **The fireplace and builders opening should be as described under '4.0 Site Requirements' and be clean, sound and level.**

2. The flue should be installed as described under '4.0 Site Requirements'.

3. It may be desirable to insert the required fittings into the heat exchanger at this point, depending on the size of the fireplace opening and whether or not the gravity injector tee is to be used.

4. Locate and mark the centre line of the finished opening and hearth (Fig. 15).

5. Hold the boiler by its combustion box at either side of the heat exchanger, lift from the packing base and place into the opening.

6. Align the boiler centrally using the "V" mark on the front centre of the appliance base. Check the distance between each side of the base and opening. They should be equal (Fig. 15).

7. The front edge of the base tray must align with the finished front face of the wall or surround. **This is important for correct installation of the firefront.**

8. Mark the hearth through the two slots in the base (Fig. 14).

6.6 Securing the Boiler

1. It is important that the boiler is secured to the base of the builders opening.

2. The hearth should be drilled as follows: Remove the boiler and drill the hearth. Insert suitable plugs. Replace the boiler & check the alignment within the opening is correct. Secure the boiler with two screws.

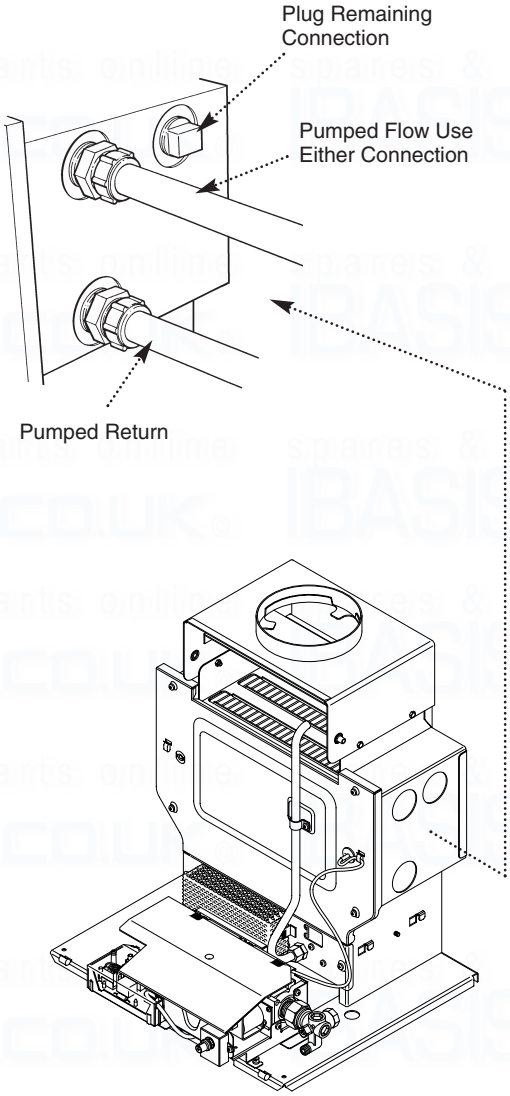

Fig. 16

6.7 Water Connections

1. The boiler has one return and two flow tappings, Rc1 (1in BSP). The flows are the two upper tappings. The return is the lower position tapping and is marked RETURN. It is essential the flow and return pipes are connected to the correct tappings.

6.8 Fully Pumped Systems (Fig. 16)

1. A 1in x 22mm threaded adaptor, compression nut and olive are provided in the kit for the return connection.

2. The 1in x 22mm threaded adaptor provided must be fitted to the lower tapping marked RETURN. Connect the pumped return into the adaptor using the nut and olive.

3. Fit a 1in x 22mm threaded adaptor into one of the higher tapping positions marked FLOW and connect the pumped flow into the adaptor.

4. Fit a 1in plug to the remaining connection.

6. Follow the instructions under ‘System Details’ as regards the vent pipe and cold feed.

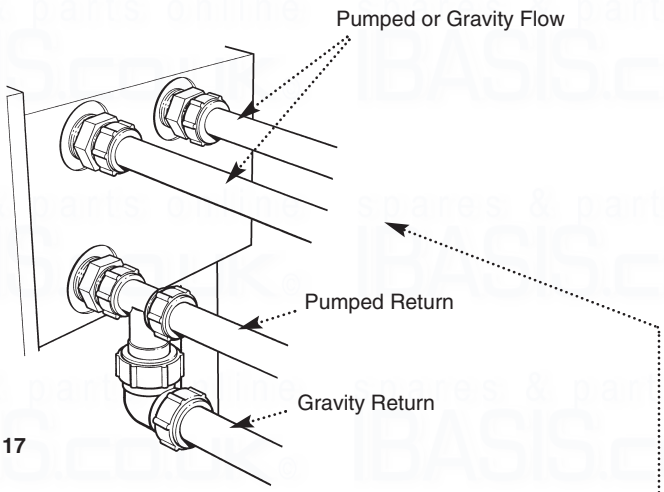

Fig. 17

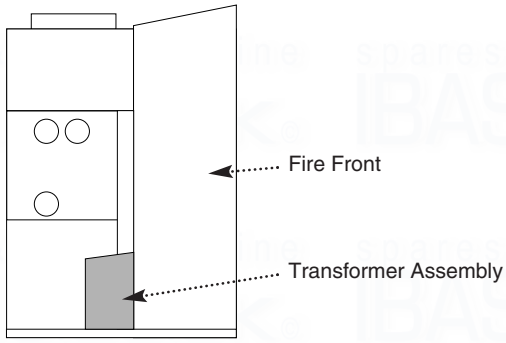

Fig. 18

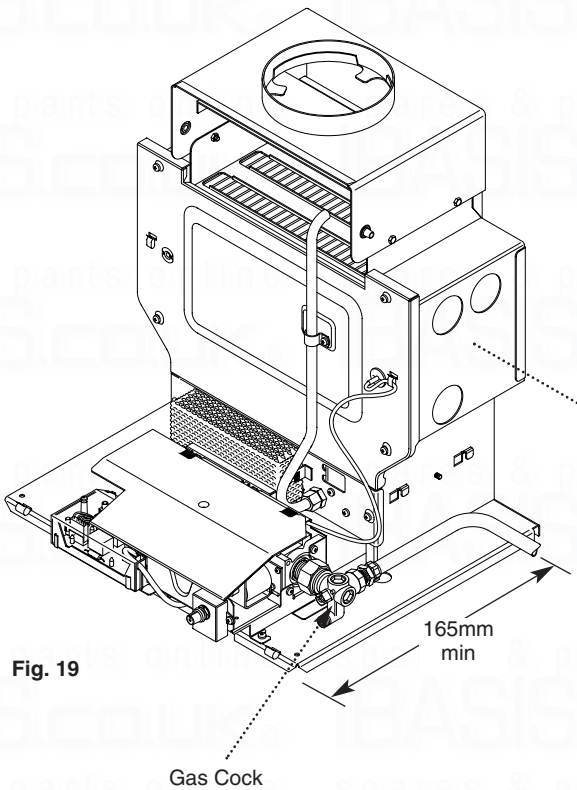

Fig. 19

6.9 Pumped Heating & Gravity Hot Water (Fig. 17)

1. A 1in x 22mm threaded adaptor, two compression nuts and olives and a brass injector tee piece are provided in the kit for the return connection.

NOTE: The injector tee must be fitted to the return of all systems with gravity domestic hot water.

2. The 1in x 22mm threaded adaptor provided must be fitted to the lower tapping marked RETURN.

3. Fit the injector tee into the adaptor. The injector tee may be oriented as shown to facilitate connection to the gravity return pipework.

NOTE: When connections are on the left, ensure that the injector tee does not encroach on the shaded area (Fig. 18). This area is required for the firefront transformer assembly.

4. Connect the pumped return to the 22mm compression fitting of the injector tee.

5. Take the gravity hot water return pipe to a level beneath that of the injector tee and connect upwards to the 28mm branch of the injector tee, oriented as shown.

6. Connect the pumped flow to one of the connections marked FLOW. Connect the gravity flow to the remaining connection.

7. The gravity flow pipes must rise vertically as close as possible to the appliance. Ensure the pipework is routed such that it does not introduce an airlock in the boiler.

8. Follow the instructions under system details as regards the vent pipe and cold feed.

6.10 Gas Connection (Fig. 19)

1. Connection to the gas supply is Rc ½ (½in BSPT) internal located at the rear of the gas cock. The gas supply pipe must be routed from the right hand side.

2. The positioning of the gas supply pipe must not restrict the servicing of the appliance or installation of the fire.

Fig. 20

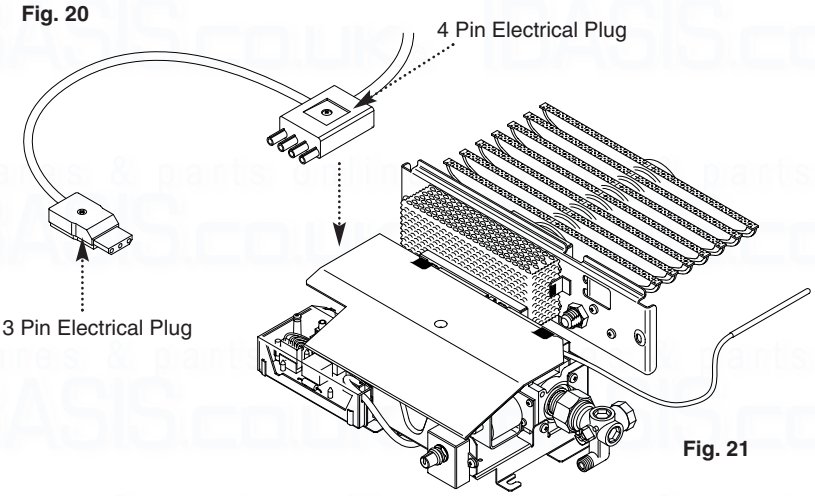

Fig. 21

Fig. 22

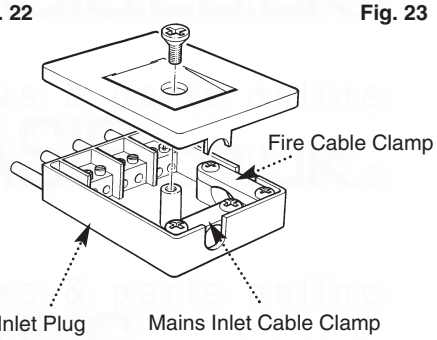

Fig. 23

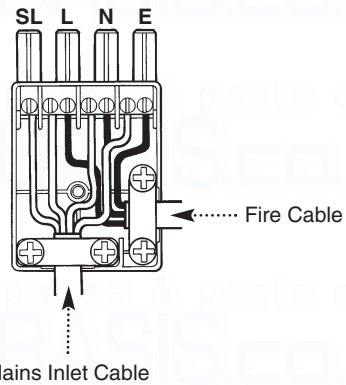

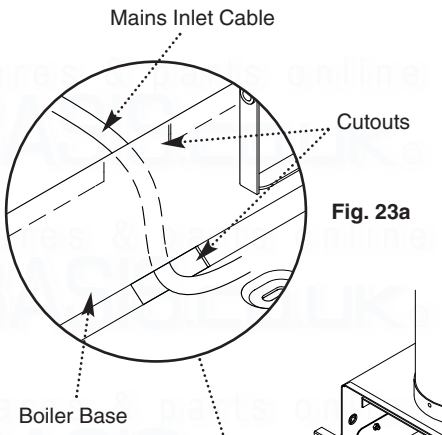

Fig. 23a

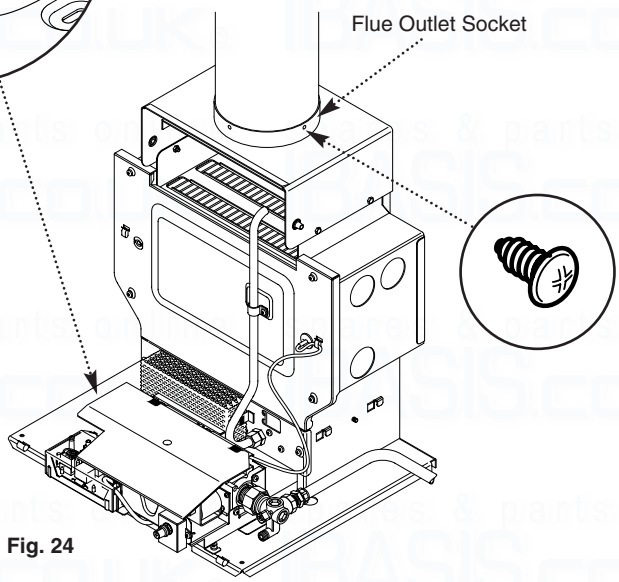

Fig. 24

6.11 Electrical Connection

1. The appliance requires an electrical supply from the heating controls system.

2. **A permanent live supply is required.**

WARNING: The appliance must be earthed. The input cable for the appliance should be 0.75mm² to IEC Code 227 (heat resistant). The system external controls and the appliance must be supplied by the same isolator.

6.12 Making the Electrical Connection

1. Take the 3 pin plug and lead assembly from the gas fire contents kit and remove the 4 pin electrical plug from the control PCB.

2. Remove the cover from the 4 pin plug and undo the cable clamps (Fig. 22).

3. Route the mains inlet cable under the boiler base through the cutouts (Fig. 23a).

IMPORTANT: The mains inlet cable MUST be routed under the boiler base to ensure that it cannot interfere with the transformer box on the fire front.

4. Connect the cables as indicated (Fig. 23):
Mains Inlet cable:
- Permanent live to L
- Controls system switched live to SL
- Control system neutral to N
- Earth to ⏚

Fire cable:
- Brown (live) to L
- Blue (neutral) to N
- Green and Yellow (earth) to ⏚

Re-fit the cable clamps ensuring that the outer insulation is securely held and re-fit the plug cover.

Ensure that all cables are routed away from the boiler casing and hood.

6.13 Flue Connection (Fig. 24)

1. If not already done so, fit the boiler hood now. Locate the flue within the flue socket and secure with the three self tapping screws provided in the kit.

2. Seal the flue against the flue outlet socket.

6.14 Completion

1. Seal off any secondary openings within the builders opening after wrapping the gas and water pipes through the brickwork and within the opening itself. (B.S. 5871 Part 1).

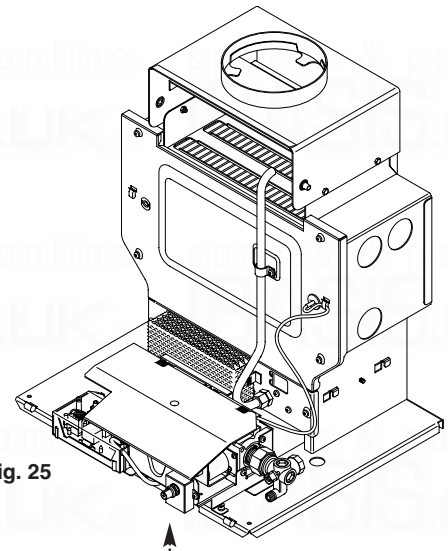

Fig. 25

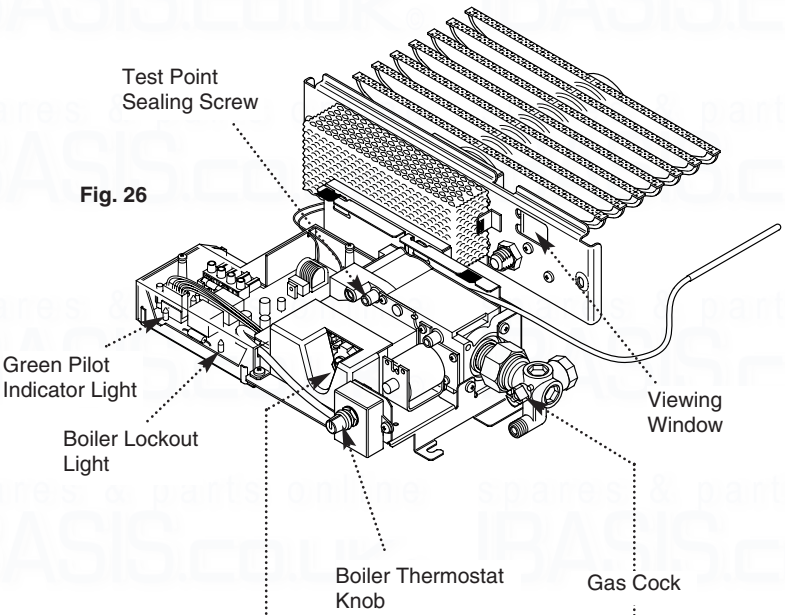

Fig. 26

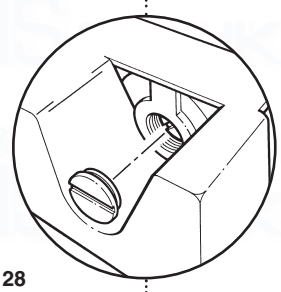

Fig. 28

Governer Cover Screw

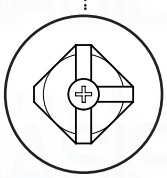

Off Position

Fig. 27

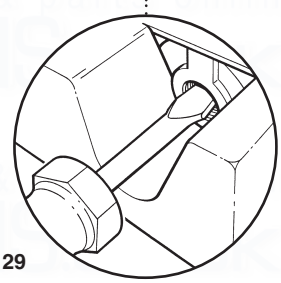

Fig. 29

Adjust Governer
in either direction

7.1 Commissioning the Appliance

1. Reference should be made to BS 5449 section 5 when commissioning the boiler and system.

2. Flush the whole system in accordance with BS7593:1992. (See Treatment of Water Circulating Systems section 3.2). Check the system for leaks.

3. Turn the gas service cock 1/4 turn from the off position (Fig. 27). This will supply gas to the boiler only. Purge the air from the gas service pipe in accordance with BS 6891 and test for gas soundness.

4. Turn the boiler thermostat to the off position (Fig. 26).

5. Ensure that all external controls e.g. room stat, timer etc are calling for heat and turn on the mains electrical supply.

6. Slacken the test point sealing screw and connect a pressure gauge (Fig. 26).

The pilot is intermittent and lights when the boiler thermostat is calling for heat.

To operate the pilot turn the thermostat to HIGH. The burner will also light shortly after the pilot has been established.

The boiler is fitted with a series of diagnostic indicator lights that indicate the status of the boiler. Three of these are visible through the top of the control box cover and two through the front of the control box. Their sequence of operation is as follows:-

a) No power-no lights.
b) Permanent live supplied-orange light illuminates.
c) Permanent live & switched live supplied-second orange light illuminates.
d) Boiler thermostat turned on-third orange light illuminates and spark generator operates.
e) Pilot established-green light illuminates and power supplied to main burner solenoid.
f) Boiler fault-orange light illuminates and boiler goes to lockout.

The pilot flame should be without a yellow tip and be approximately 20mm long. No adjustment is possible.

Operate the burner and allow the system to reach normal operating temperature. Make further checks for leaks and check the burner setting pressure, adjusting if necessary.

This is done by removing the governor cover screw (Fig. 28) and adjusting the governor in either direction as required:- clockwise to increase, anticlockwise to decrease (Fig. 29).

Remove the pressure gauge and tighten the pressure test point sealing screw.

The boiler and system should be run and then flushed and treated in accordance with BS5793: 1992 and the flushing agent/inhibitor manufacturers instructions. When all the air has been removed from the water circuit, the pump and radiators should be balanced to achieve the design temperature drop across the system.

Carefully read and complete all sections of the “Benchmark” Installation, Commissioning and Service Record Log Book that are relevant to the appliance and installation. The details of the Log Book will be required in the event of any warranty work. The Log Book must be handed to the user for safe keeping and each subsequent regular service visit recorded.

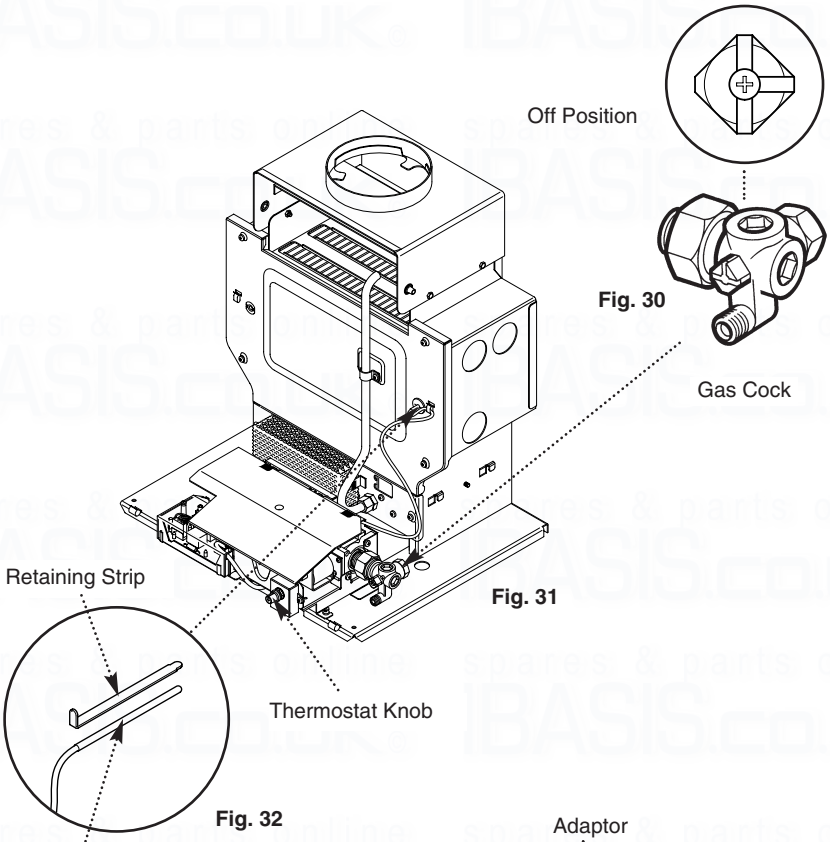

Fig. 30

Fig. 31

Fig. 32

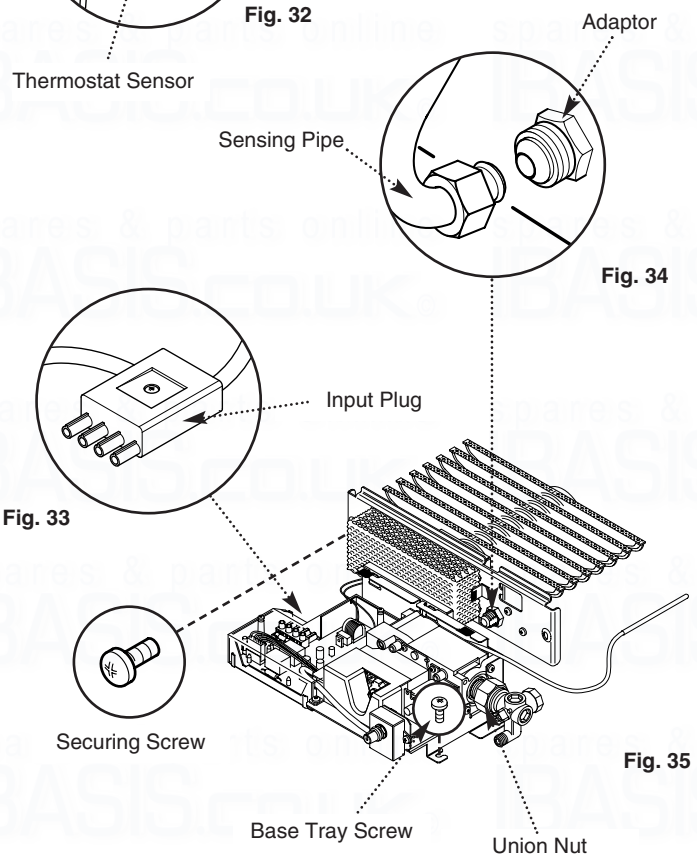

Fig. 34

Fig. 33

Fig. 35

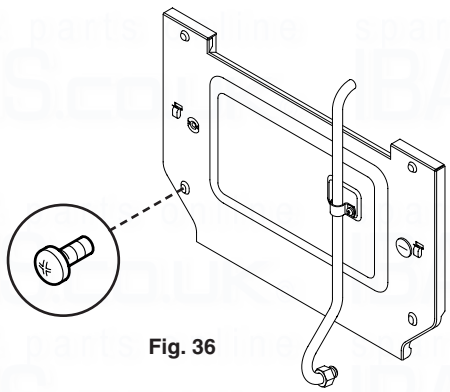

Fig. 36

8.1 Annual Servicing

1. To perform annual servicing of the back boiler it is necessary to remove the firefront.

2. After servicing, complete the relevant section of the “Benchmark” Installation, Commissioning and Service Record Log Book. This should be in the possession of the user.

8.2 Removal of Firefront

1. Isolate the electrical supply to the appliance.

2. Turn the gas service tap to the off position (Fig. 30).

3. Refer to the separate firefront instructions for the removal of the firefront.

8.3 Removal of Controls

1. Turn the boiler thermostat to "O" position (Fig. 31).

2. Pull the electrical input plug from the socket on the P.C.B. (Fig. 33).

3. Disconnect the union at the gas service cock and remove the fire feed pipe (Fig. 35).

4. Remove the thermostat sensor and retaining strip from the boiler (Fig. 32).

5. Undo the nut on the sensing pipe at the adaptor (Fig. 34).

6. Undo the four screws retaining the door and remove the door (Fig. 36).

7. Undo the two screws retaining the controls to the combustion box sides (Fig. 35).

8. Undo the screw holding the controls to the combustion box base tray (Fig. 35).

9. Withdraw the controls from the boiler.

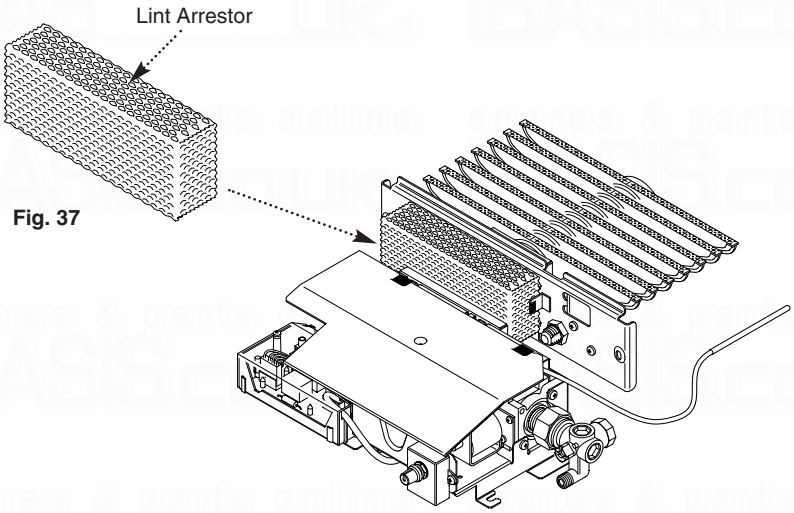

Fig. 37

8.4 Cleaning the Lint Arrestor

1. Remove the lint arrestor from its retaining clips on the burner mounting plate and clean away any deposits (Fig. 37).

8.5 Cleaning the Burner & Main Injector

1. Remove the four hexagon headed screws holding the burner to the burner mounting plate (Fig. 38).

2. Carefully clean any deposits from the burner blades and venturi inlet (Fig. 38).

3. Remove the injector and copper sealing washer from the feed pipe. Clean the injector and reassemble in reverse order (Fig. 38).

4. Reassemble the burner in reverse order and refit the lint arrestor.

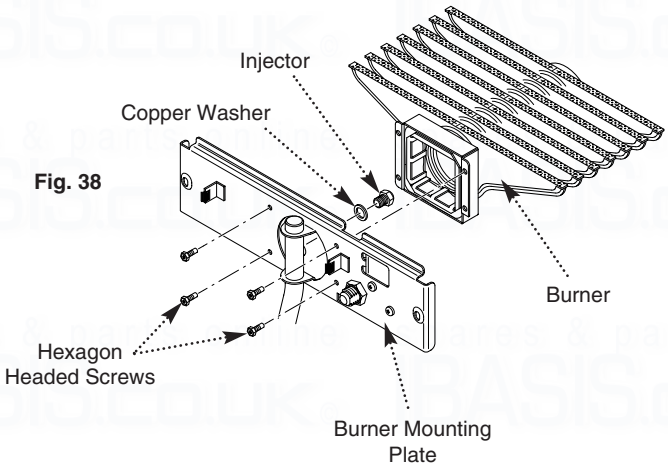

Fig. 38

8.6 Cleaning the Pilot/A.S.D. Assembly

NOTE: No attempt should be made to clean the device using any hard tools, including pins or wire.

WARNING: The pilot/A.S.D. assembly must not be adjusted in any way.

1. The A.S.D. must not be altered so that it will not operate or be bypassed in any way.

2. Ensure that the pilot burner aeration hole is free from lint, debris etc (Fig. 41).

3. If necessary clean the electrode and target, and check that the spark gap is 2.5 - 4.0mm (Fig. 39).

4. The complete assembly must be replaced in the event of one or other componet failure(s).

5. Only use a Genuine Baxi Spare Part.

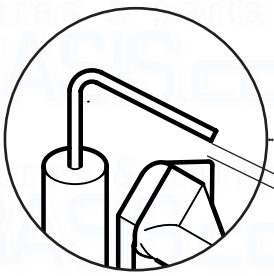

Fig. 39

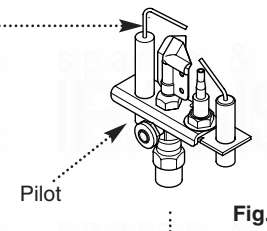

Fig. 40

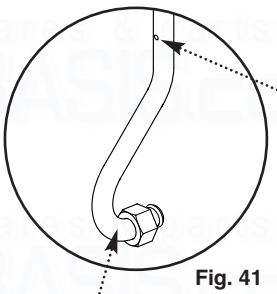

Fig. 41

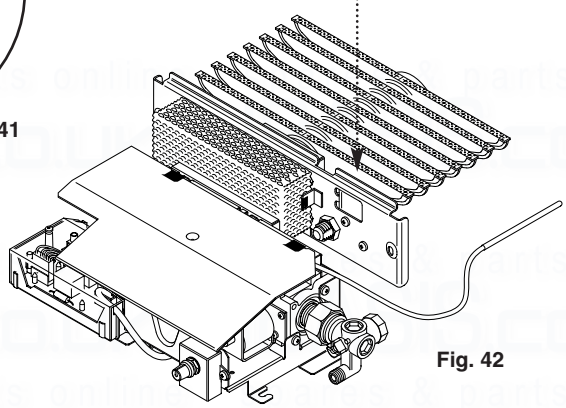

Fig. 42

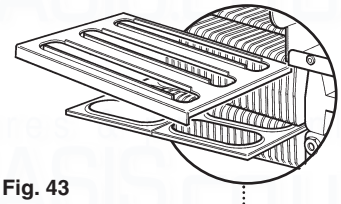

Fig. 43

Heat Exchanger Baffles

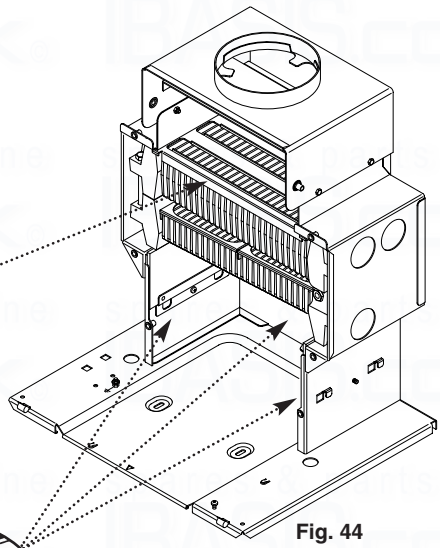

Fig. 44

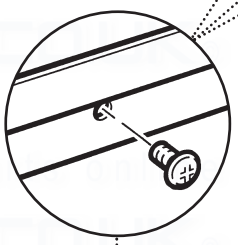

Fig. 45

Undo the Retaining Screws on the Support Brackets

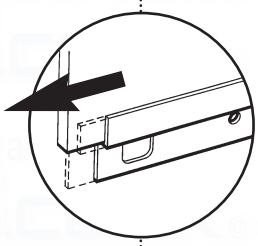

Fig. 46

Slide Rear Insulation Bracket Left Before Pulling Forward

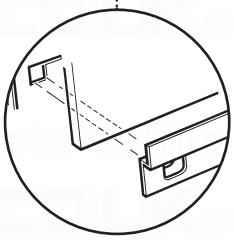

Fig. 47

Remove each Bracket and Insulation

8.7 Cleaning the Heat Exchanger

1. Remove the top and the centre baffles from the heat exchanger, noting their orientation (Fig. 43).

2. Remove the side and rear insulation pieces by undoing the screws retaining the support brackets and sliding the rear bracket to the left and both side brackets forward (Fig. 44, 45,46 & 47).

3. Each bracket may then be removed along with the insulation.

4. Clean between the heat exchanger fins and flueways with suitable brushes and remove any deposits from the combustion box base tray.

5. Clean away any lint or other deposits from the boiler hood and builders opening.

6. Reassemble the insulation in reverse order and refit the baffles.

7. Reassemble the appliance in reverse order, re-greasing the thermostat phial if required.

8. Re-commission the appliance and check for gas soundness.

9. Complete the relevant section of the “Benchmark” Installation, Commissioning and Service Record Log Book and hand it back to the user.

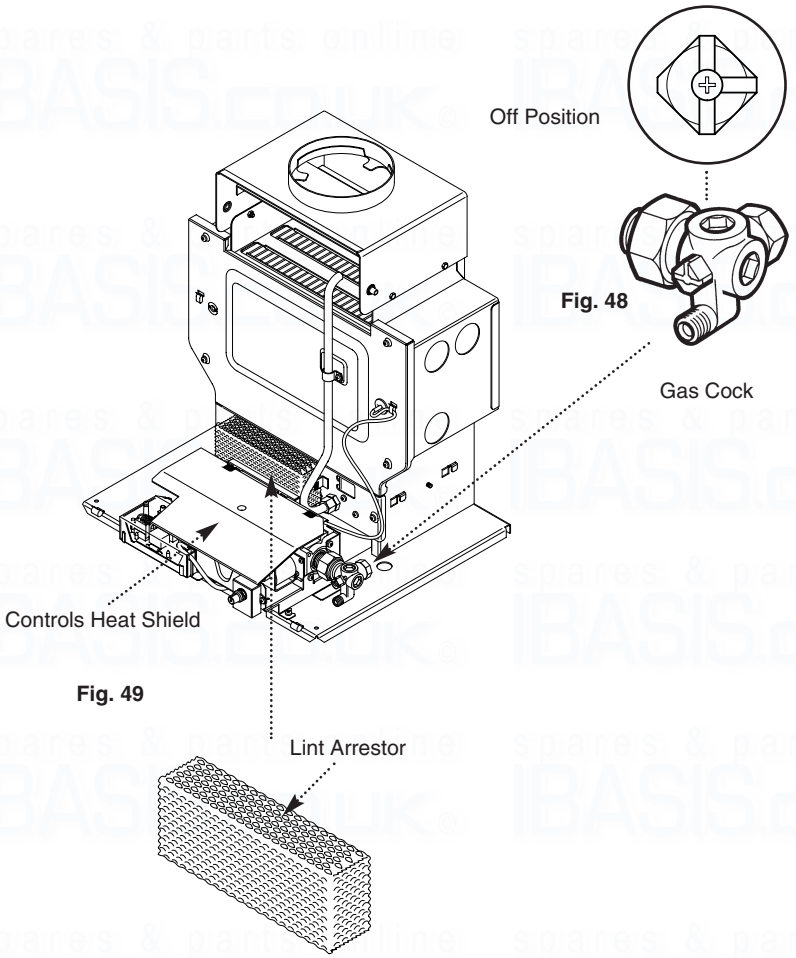

Fig. 48

Fig. 49

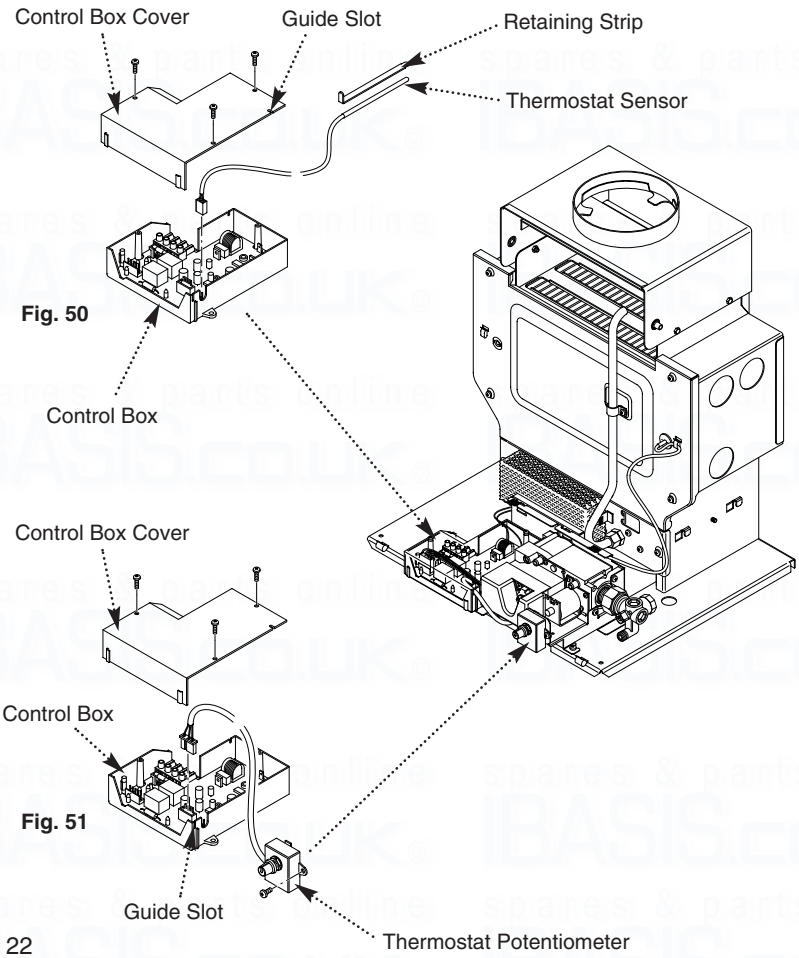

Fig. 50

Fig. 51

9.1 Changing Components

1. To change any components on the back boiler it is necessary to remove the fire front.

2. After changing any components carry out gas soundness checks.

9.2 Removal of Firefront

1. Isolate the electrical supply to the appliance.

2. Turn the thermostat knob to the off position (Fig. 52).

3. Turn the gas service tap to the off position (Fig. 50).

4. Refer to the separate firefront instructions for the removal of the firefront.

The following components can be changed with the controls in situ :- Lint Arrestor, Thermostat Sensor, Thermostat Potentiometer and P.C.B.

9.3 Lint Arrestor

1. Remove the lint arrestor by pulling forward away from its retaining clips (Fig. 49).

2. Reassemble in reverse order.

9.4 Thermostat Sensor (Fig. 49 & 50).

1. Remove controls heat shield.

2. Remove the thermostat sensor & retaining strip from the boiler.

3. Undo the three screws retaining the control box cover and remove the cover.

4. Disconnect the thermostat sensor plug from the PCB.

5. Reassemble in reverse order.

9.5 Thermostat Potentiometer (Fig. 51).

1. Remove the controls heat shield from its retaining clips.

2. Undo the three screws retaining the control box cover and remove the cover.

3. Disconnect the thermostat potentiometer plug from the PCB and remove the potentiometer wires from their guide slot in the control box side.

4. Undo the screw holding the thermostat potentiometer to the controls mounting bracket and remove the potentiometer by disengaging its locating tab.

5. Reassemble in reverse order.

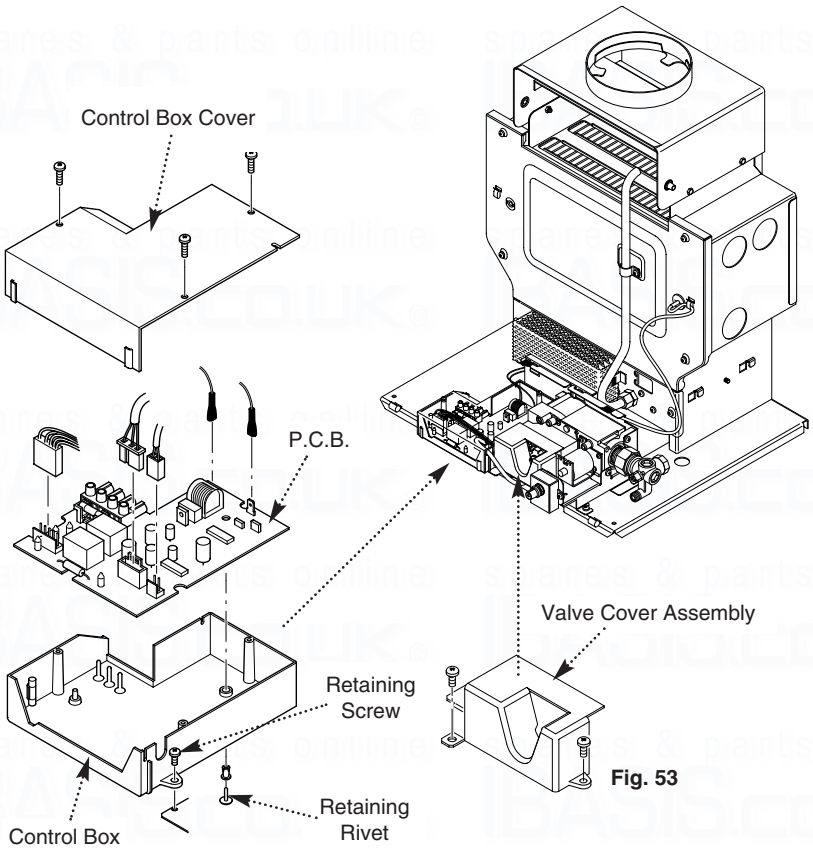

Fig. 52

Fig. 53

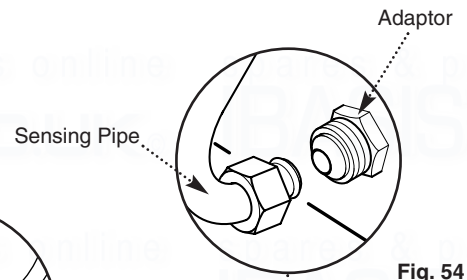

Fig. 54

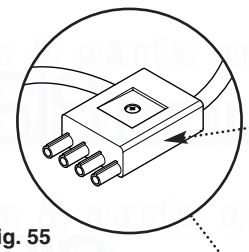

Fig. 55

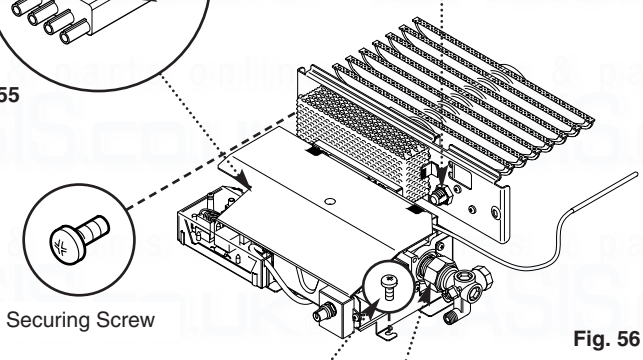

Fig. 56

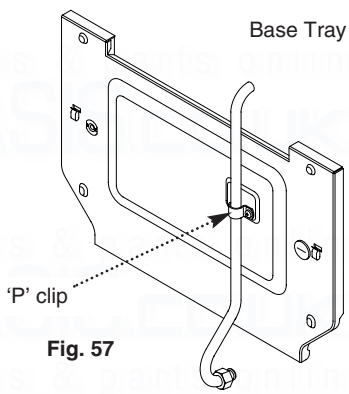

Fig. 57

9.6 Printed Circuit Board

1. Remove the controls heat shield from its retaining clips.

2. Undo the two screws retaining the valve cover assembly and remove the assembly (Fig. 53).

3. Undo the three screws retaining the control box cover and remove the cover (Fig. 52).

4. Disconnect the three multi-pin plugs, flame sensing lead and ignition lead from the PCB, noting their positions (Fig. 52).

5. Pull the valve wiring grommet out of the slot in the control box.

6. Undo the screw retaining the control box and remove the box (Fig. 52).

7. Push out the black rivet retaining the PCB (Fig. 52).

8. Fit the new PCB using the rivet (Fig. 52).

9. Reassemble in reverse order.

To change the Gas Valve, Burner and Main Injector, Electrode/Leads, and Pilot/A.S.D. Assembly proceed as follows:-

9.7 Removal of Controls

1. Turn the boiler thermostat to "O".

2. Pull the input plug from the socket on the P.C.B. (Fig. 55).

3. Disconnect the union at the gas service cock and remove the fire feed pipe (Fig. 56).

4. Remove the thermostat sensor and retaining strip from the boiler.

5. Undo the nut on the sensing pipe at the adaptor (Fig. 54).

6. Loosen the 'P' clip and slide the sensing pipe up to clear the burner plate (Fig. 57).

7. Undo the two screws retaining the controls to the combustion box (Fig. 56).

8. Undo the screw holding the controls to the combustion box base tray (Fig. 56).

9. Lift the front edge of the controls up and pull forwards to ensure the burner plate top edge clears the door panel.

10. Withdraw the controls from the boiler.

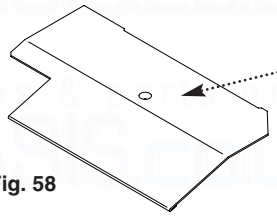

Fig. 58

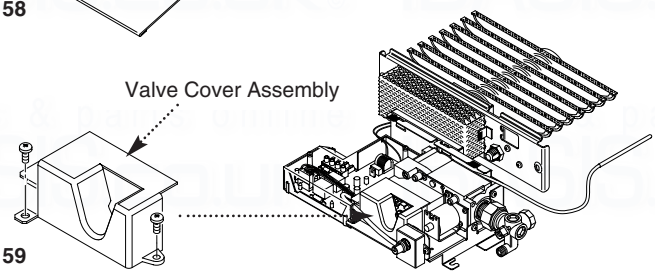

Fig. 59

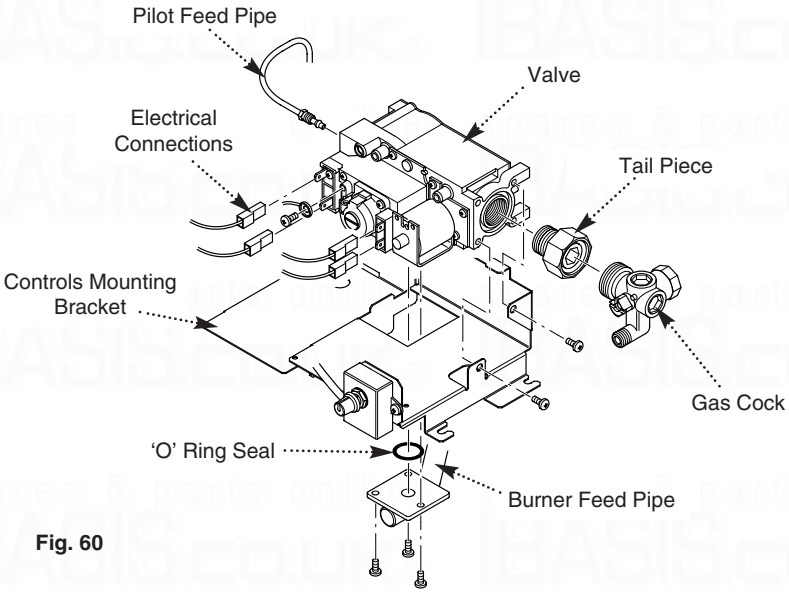

Fig. 60

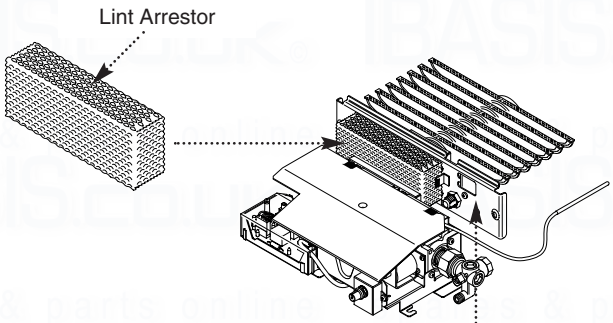

Fig. 61

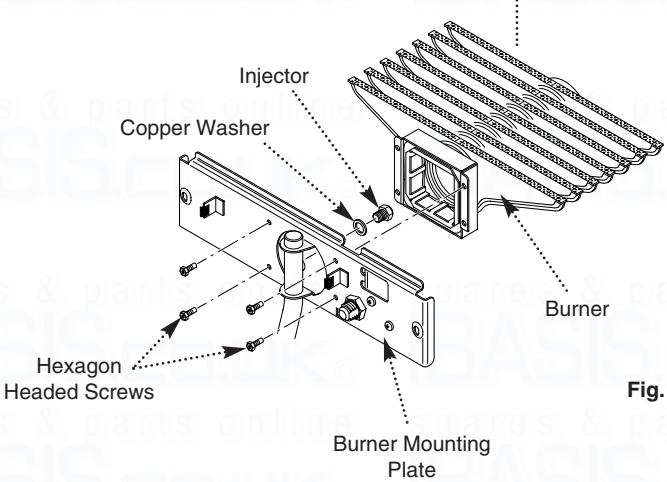

Fig. 62

9.8 Gas Valve

1. Remove controls heat shield (Fig. 58).

2. Remove the screws holding the valve cover assembly to the controls mounting bracket and remove the assembly (Fig. 59).

3. Disconnect the electrical connections from the valve, noting the position of each wire (Fig. 60).

4. Remove the three screws holding the burner feed pipe to the valve, being careful not to lose or damage the "O" ring seal (Fig. 60).

5. Undo the pilot feed pipe nut from the valve (Fig. 60).

6. Remove the two screws holding the valve to the controls mounting bracket adjacent to the union nut and tailpiece (Fig. 60).

7. Remove the valve from the controls mounting bracket (Fig. 60).

8. Remove the tailpiece and union nut from the original valve and fit to the new one (Fig. 60).

9. Reassemble in reverse order.

9.9 Burner & Main Injector

1. Remove the lint arrestor by pulling forward (Fig. 61).

2. Remove the four hexagon headed screws holding the burner to the mounting plate (Fig. 62).

3. If required the main injector can be unscrewed from the feed pipe and replaced. The copper sealing washer must be retained for re-use or replace if damaged (Fig. 62).

4. Reassemble in reverse order.

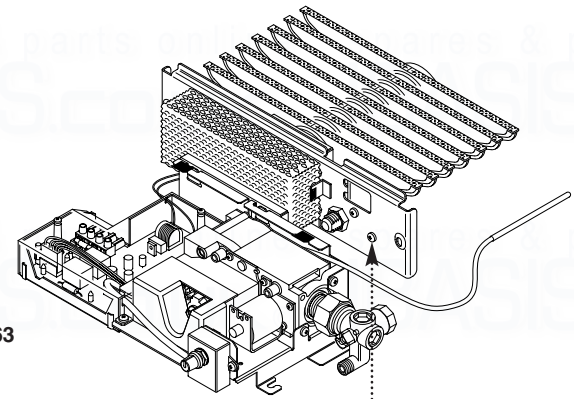

Fig. 63

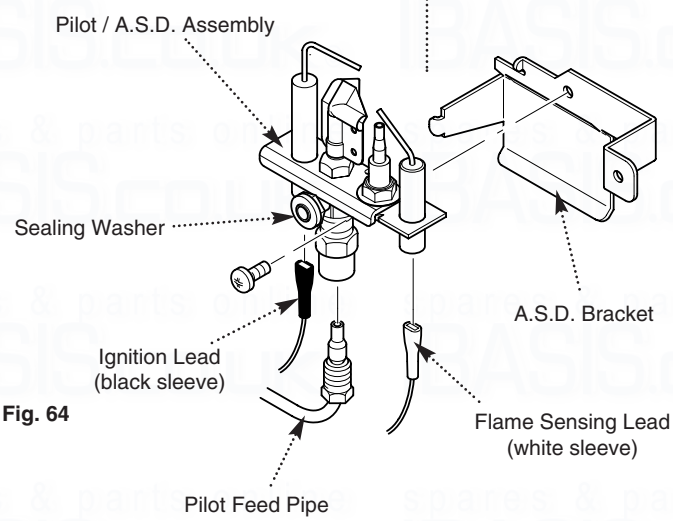

Fig. 64

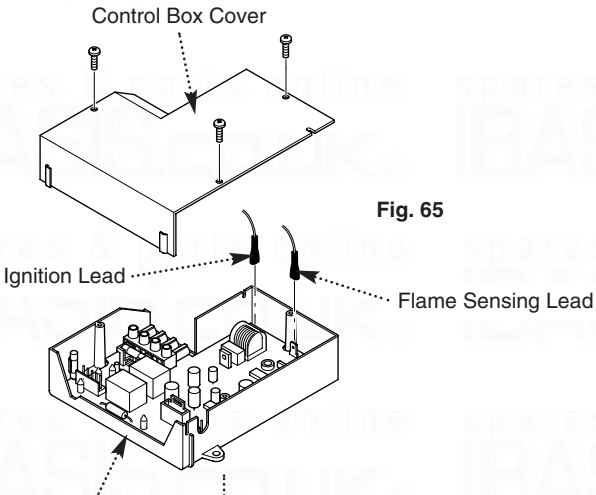

Fig. 65

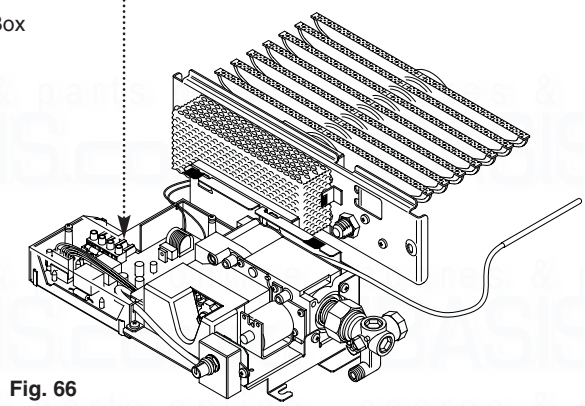

Fig. 66

9.10 Pilot/A.S.D. Assembly

WARNING: The Pilot/A.S.D. Assembly should not be adjusted in anyway. The A.S.D. must not be altered so that it will not operate or be bypassed in anyway. The complete assembly must be replaced in the event of one or other component failure(s). Only use a Genuine Baxi Spare Part.

1. Remove the ignition and sensing leads from the A.S.D. electrodes (Fig. 64). Undo the pilot feed pipe at the A.S.D. (Fig. 63 & 64).

2. Undo the screw holding the A.S.D. bracket to the burner mounting plate and disengage the tab on the bracket from the plate. Undo the screw holding the A.S.D. to its bracket (Fig. 63).

3. Fit the new A.S.D. onto the bracket (Fig. 64) and connect the ignition and sensing leads to their electrodes.

4. Engage the tab on the A.S.D. bracket in the hole in the burner mounting plate. Ensure that the pilot aeration tube seal sits in the recess in the sensing pipe adaptor. Refit the retaining screw.

5. Reassemble in reverse order.

9.11 Ignition Lead

1. Remove controls heat shield.

2. Remove the three screws securing the controls box cover and remove the electrode lead from its terminal on the PCB and the electrode. The lead has a black sleeve at the electrode end (Fig. 64 & 65).

3. Reassemble in reverse order.

9.12 Flame Sensing Lead

1. Remove controls heat shield.

2. Remove the three screws securing the controls box cover and remove the electrode lead from its terminal on the PCB and at the sensing probe end. The lead has a white sleeve (Fig. 64 & 65).

3. Reassemble in reverse order.

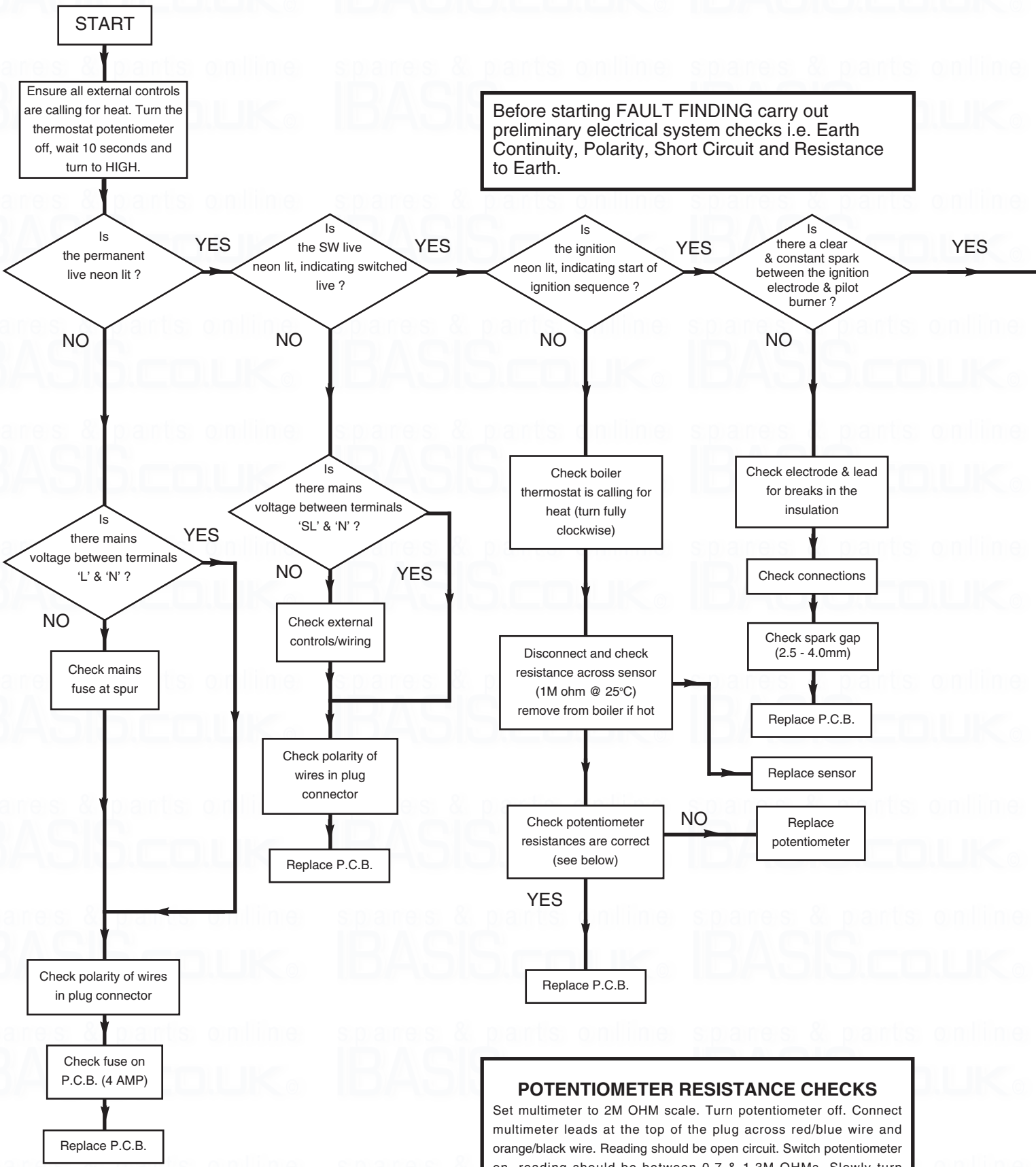

Before starting FAULT FINDING carry out preliminary electrical system checks i.e. Earth Continuity, Polarity, Short Circuit and Resistance to Earth.

POTENTIOMETER PLUG

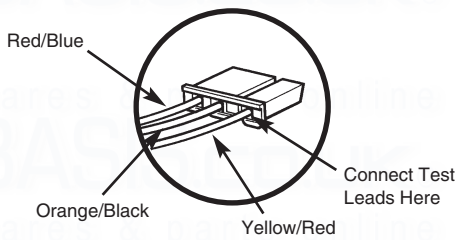

POTENTIOMETER RESISTANCE CHECKS

Set multimeter to 2M OHM scale. Turn potentiometer off. Connect multimeter leads at the top of the plug across red/blue wire and orange/black wire. Reading should be open circuit. Switch potentiometer on, reading should be between 0.7 & 1.3M OHMs. Slowly turn potentiometer to full on; reading should decrease, proportionate to knob position, down to between 0.24 & 0M OHMs.

Connect multimeter leads to orange/black and yellow/red wires. Reading should be between 0.7 & 1.3M OHMs. Slowly turn potentiometer down, reading should decrease, proportionate to knob position, down between 0.2 & 0M OHMs.
Turn potentiometer completely off, reading should be open circuit.

WARNING: Where practicable fault finding should be performed with the main electricity supply ISOLATED.

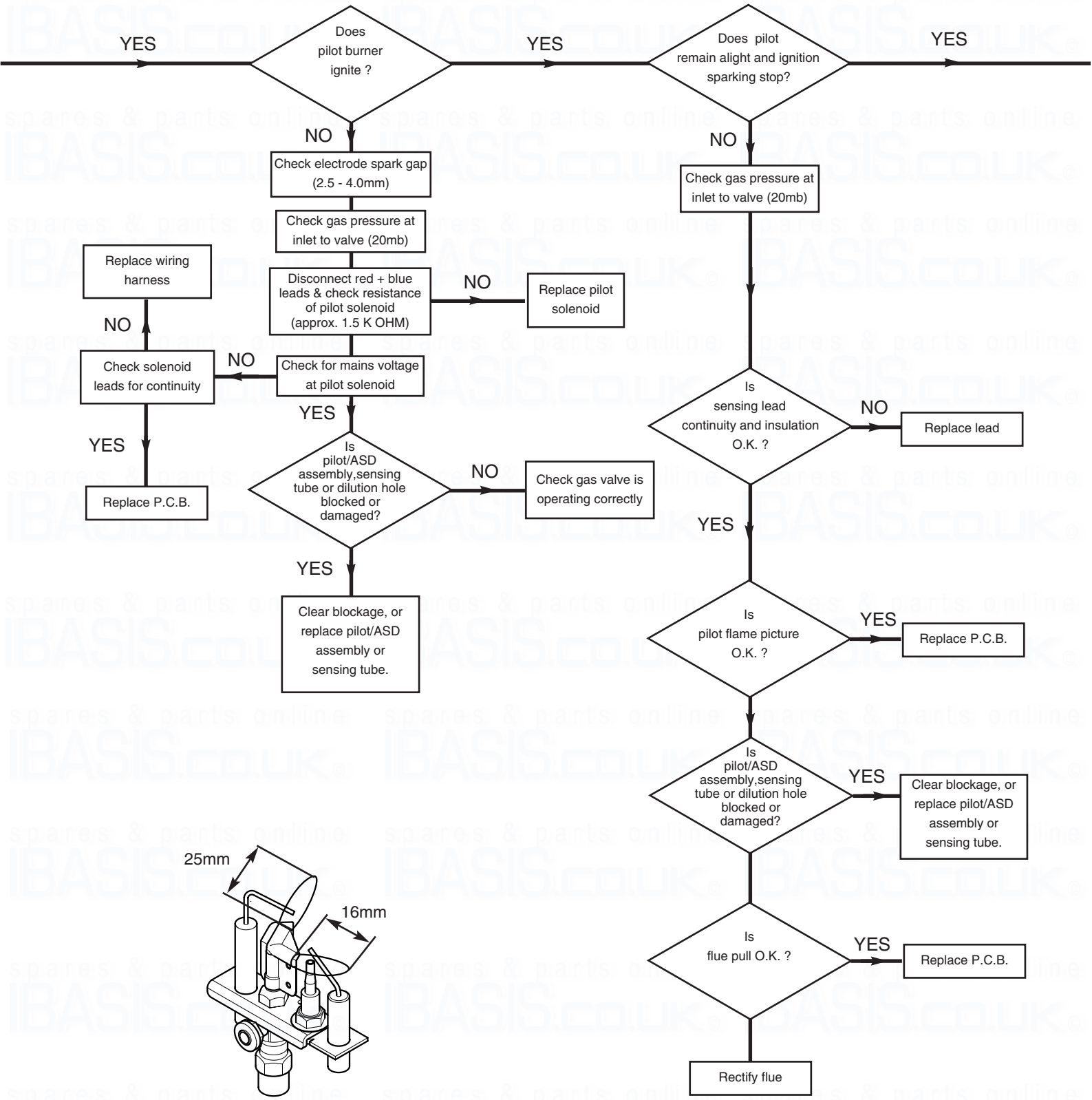

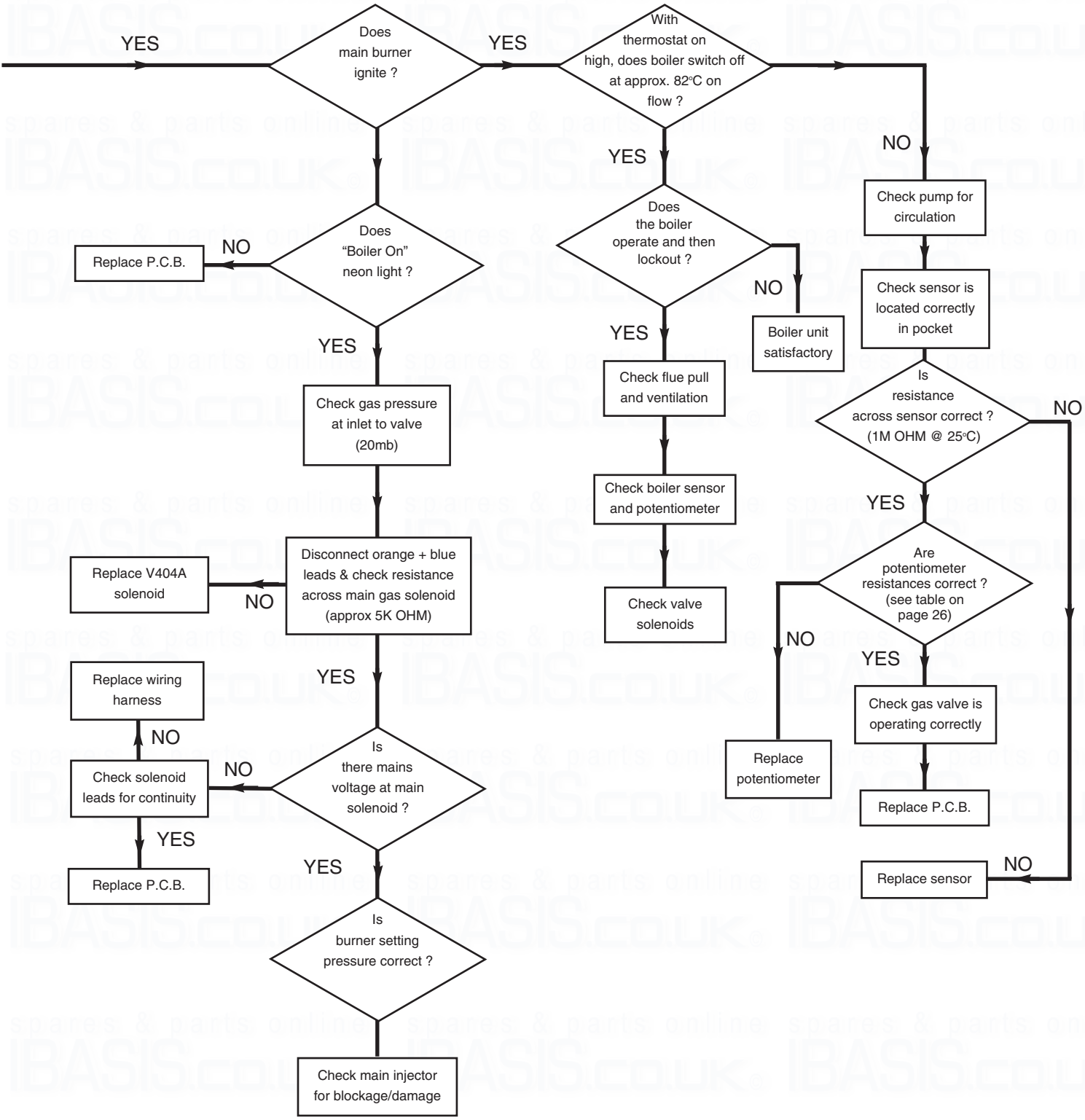
YES
Does main burner ignite ?
YES
With thermostat on high, does boiler switch off at approx. 82°C on flow ?
NO
Check pump for circulation
Check sensor is located correctly in pocket
Is resistance across sensor correct ? (1M OHM @ 25°C)
NO
YES
Are potentiometer resistances correct ? (see table on page 26)
NO
Replace potentiometer
YES
Check gas valve is operating correctly
Replace P.C.B.
Replace sensor
NO
YES
Does the boiler operate and then lockout ?
NO
Boiler unit satisfactory
YES
Check flue pull and ventilation
Check boiler sensor and potentiometer
Check valve solenoids
Does "Boiler On" neon light ?
NO
Replace P.C.B.
YES
Check gas pressure at inlet to valve (20mb)
Disconnect orange + blue leads & check resistance across main gas solenoid (approx 5K OHM)
NO
Replace V404A solenoid
YES
Is there mains voltage at main solenoid ?
NO
Check solenoid leads for continuity
NO
Replace wiring harness
YES
Replace P.C.B.
YES
Is burner setting pressure correct ?
Check main injector for blockage/damage

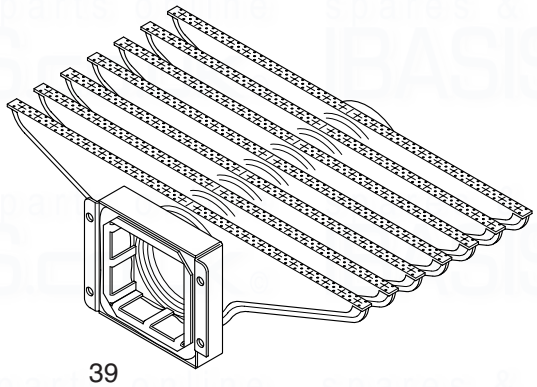

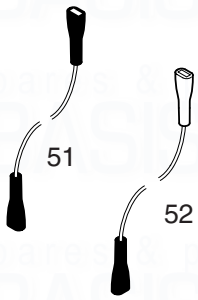

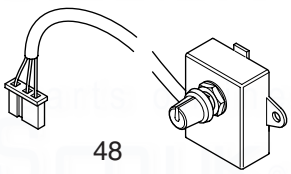

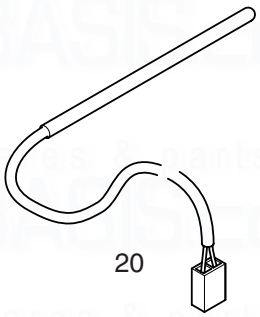

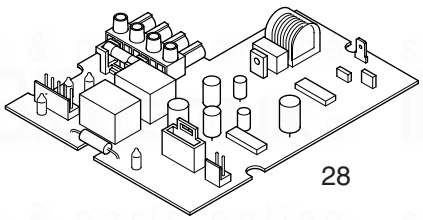

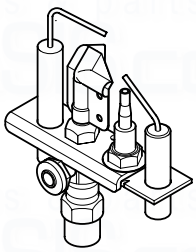

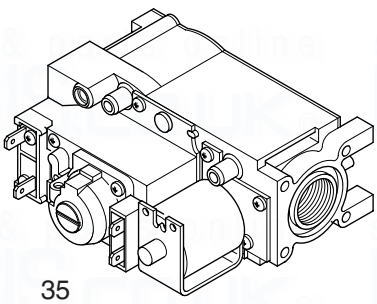

Short Parts List

Key No.	G.C. No.	Description	Manufacturers Part No.
39	E02-416	Burner	238652
60	378 882	Injector B19	234014
51	E00-121	Ignition Lead	237811
52	E00-122	Sensing Lead	237812
35	193 182	Valve	236579
33	E37 405	Pilot/A.S.D. Assembly	246386
28	E00-118	P.C.B	237730
48	378 909	Potentiometer & Leads	235900
20	E37 397	Thermostat Sensor	246381

spares & parts online IBASIS.CO.UK

Baxi UK Limited manufacture a comprehensive range of products for the domestic heating market

Gas Central Heating Boilers (Wall, Floor and Fireside models).

Independent Gas Fires.

Renewal Firefronts.

Gas Wall Heaters.

Solid Fuel Fires.

If you require information on any of these products, please write to the Sales Department.

Comp Nº 245025 - Iss 5 - 6/00

The Baxi Helplines

For General Enquiries
+44 (0)8706 060 780

For After Sales Service
+44 (0)8706 096 096

For Technical Enquiries
+44 (0)8706 049 049

BAXI

Baxi UK Limited
Brownedge Road
Bamber Bridge Preston
Lancashire
PR5 6SN
www.baxi.com

spares & parts online IBASIS.CO.UK