Please leave these instructions with the user

Baxi Bermuda
Inset 2 Boiler 50/4

Fireside Gas Central Heating Unit

Comp N° 238983 - Issue 4 - 10/99

Installation and Servicing Instructions

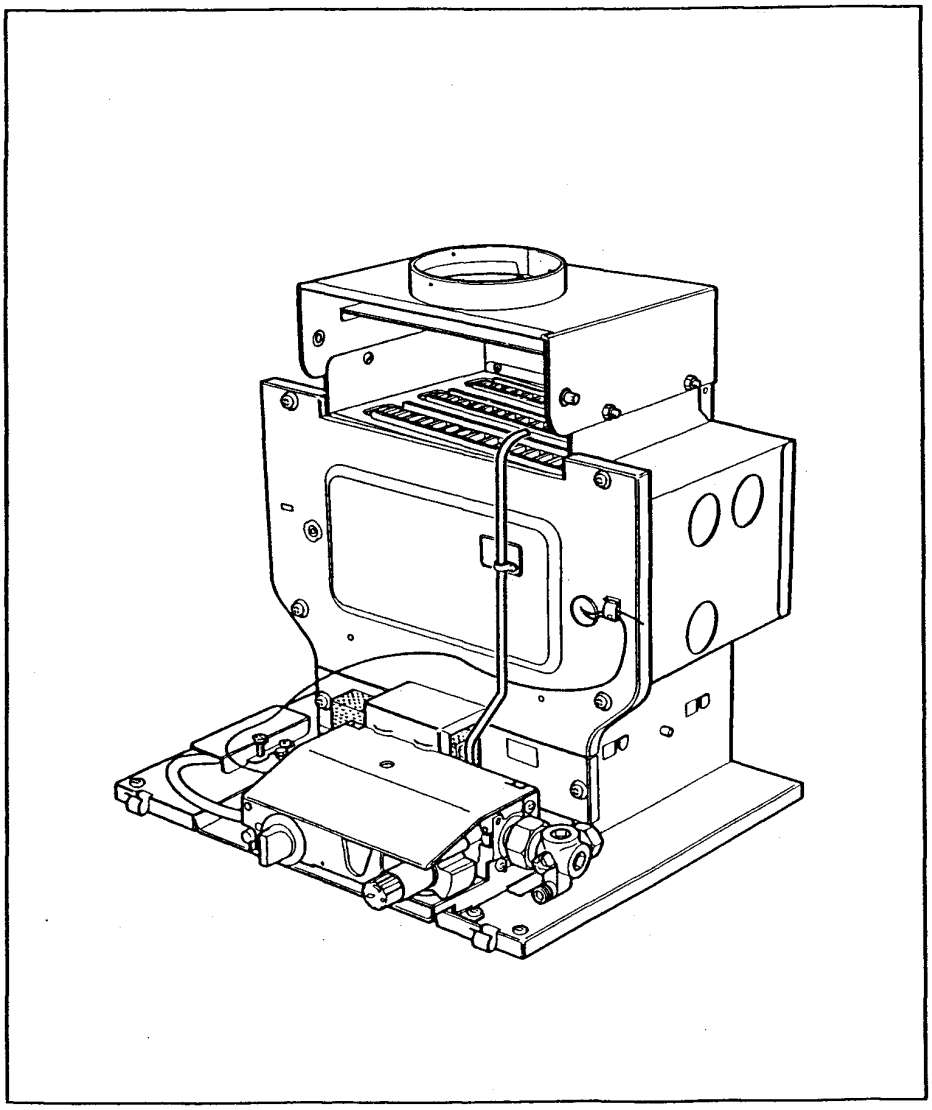

BAXI

spares & parts online IBASIS.CO.UK

Natural Gas

Baxi Bermuda Inset 2 Boiler 50/4
G.C. No. 44 075 01

For use with the following firefronts:

Baxi Bermuda Inset 2 TS
G.C. No. 37 075 12

Baxi Bermuda Inset 2 BS
G.C. No. 37 075 13

Baxi Bermuda Inset 2 FS
G.C. No. 37 075 15

Baxi Bermuda Inset 2 KS
G.C. No. 37 075 14

Baxi Bermuda Inset 2 TS Deluxe
G.C. No. 37 075 28

Baxi Bermuda Inset 2 BS Deluxe
G.C. No. 37 075 29

Baxi Bermuda Inset 2 FS Deluxe
G.C. No. 37 075 30

Baxi Bermuda Inset 2 KS Delux
G.C. No. 37 075 31

Baxi Limited is one of the leading manufacturers of domestic heating products in the UK.

Our first priority is to give a high quality service to our customers. Quality is built into every Baxi product - products which fulfil the demands and needs of customers, offering choice, efficiency and reliability.

To keep ahead of changing trends, we have made a commitment to develop new ideas using the latest technology - with the aim of continuing to make the products that customers want to buy.

Baxi is also the largest manufacturing partnership in the country. Everyone who works at the company has a commitment to quality because, as shareholders, we know that satisfied customers mean continued success.

We hope you get a satisfactory service from Baxi. If not, please let us know.

Baxi is a BS-EN ISO 9001
Accredited Company

Contents - Page 3

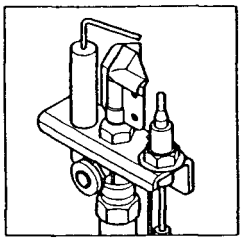

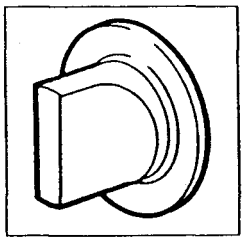

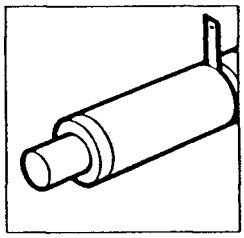

Section		Page
1.0	**Introduction**	4
2.0	**Technical Data**	5
3.0	**System Details**	6
	Water Circulating Systems	
	Treatment of Water Circulating Systems	
	Pipework	
	System Controls	
	Fully Pumped System	
	Overheat Kit & Sealed Systems	
	Storage Systems	
	Pumped Heating & Gravity Hot Water	
4.0	**Site Requirements**	9
	Builders Opening	
	Location	
	Fireplace Opening & Surround	
	Frame Extension Kit	
	Flue	
	Ventilation	
	Gas Supply	
	Electrical Supply	
5.0	**Installation**	12
	Initial Preparation	
	Right Hand Water Connections	
	Connecting the Sensing Pipe	
	Siting the Boiler	
	Securing the Boiler	
	Water Connections	
	Fully Pumped Systems	
	Overheat Thermostat	
	Pumped Heating & Gravity Hot Water	
	Gas Connection	
	Electrical Connection	
	Making the Electrical Connection	
	Overheat Thermostat	
	Flue Connection	
	Completion	
6.0	**CommissionIng the Appliance**	18
7.0	**Annual ServicIng**	19
	Annual Servicing	
	Removal of Firefront	
	Removal of Controls	
	Cleaning the Lint Arrestor	
	Cleaning the Burner & Main Injector	
	Cleaning the Pilot/A.S.D. Assembly	
	Cleaning the Heat Exchanger	
8.0	**Changing Components**	22
	Changing Components	
	Removal of Firefront	
	Lint Arrestor	
	Suppression Capacitor	
	Thermostat	
	Piezo Igniter Unit	
	Removal of Controls	
	Gas Valve	
	Burner & Main Injector	
	Pilot/A.S.D. Assembly	
	Ignition Lead	
9.0	**Fault Finding**	26
10.0	**Short Parts List**	28

1.0 Introduction - Page 4

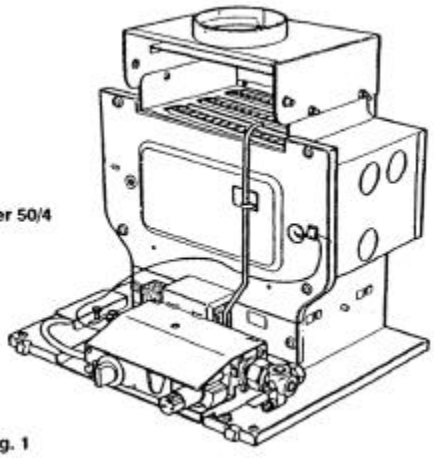

Fig. 1

The boiler meets requirements of Statutory Instrument "The Boiler (Efficiency) Regulations 1993 N° 3083" and is deemed to meet the requirements of Directive 92/42/EEC on the efficiency requirements for new hot water boilers fired with liquid or gaseous fuels.

Type test for purpose of Regulation 5 certified by: Notified Body 0086.

Product/production certified by: Notified Body 0086.

"Benchmark" Log Book

As part of the industry-wide "Benchmark" initiative all Baxi boilers now include an Installation, Commissioning and Service Record Log Book. Please read the Log Book carefully and complete all sections relevant to the appliance and installation. These include sections on the type of controls employed, flushing the system, burner operating pressure etc. The details of the Log Book will be required in the event of any warranty work. Also, there is a section to be completed at each subsequent regular service visit.

1.1 Description

1. The Baxi Bermuda Inset 2 is a combined central heating boiler and gas fire designed for installation within a builders opening in the living space of a dwelling.

2. The firefront is intended for hearth mounting.

3. These instructions relate to the central heating boiler section of the appliance (Fig. 1).

4. The boiler is range rated, with outputs as shown:

Model	HEAT OUTPUT		
	Max	Mid	Min
50/4	14.65kW (50,000 Btu/h)	13.19kW (45,000 Btu/h)	11 72kW (40,000 Btu/h)

5. The appliance is preset at its MIDRANGE heat input rate and is designed for use on NATURAL GAS only. The boiler is suitable for fully pumped and pumped central heating with gravity hot water systems.

6. Sealed System applications require an optional overheat thermostat kit.

1.2 Installation

1. The appliance is suitable for installation only in G.B. and I.E. and should be installed in accordance with the rules in force. For Ireland install in accordance with I.S. 813 "Installation of Gas Appliances".

2. The installation must be carried out by a CORGI Registered Installer or other competent person and be in accordance with the relevant requirements of Gas Safety (Installation and Use) Regulations, the Building Regulations (Scotland) (Consolidation), the Local Building Regulations, the Current I.E.E. Wiring Regulations and the bye laws of the Local Water Undertaking. Where no specific instructions are given, reference should be made to the relevant B.S. CODES OF PRACTICE.

3. **All systems must be thoroughly flushed and treated with inhibitor (**see section 3.2).

1.3 B.S. Codes of Practice

STANDARD	SCOPE
B.S. 6891	Gas Installation
B.S. 5546	Installation of hot water supplies for domestic purposes.
B.S. 5449	Forced circulation hot water systems.
B.S. 6798	Installation of gas fired hot water boilers.
B.S. 5440: Pt 1	Flues
B.S. 5440: Pt 2	Air Supply
B.S. 5871: Pt 1	Installation of fire/back boilers, gas appliances.
B.S. 6500	Cables

2.0 Technical Data - Page 5

Inset 2 50/4 hydraulic resistance

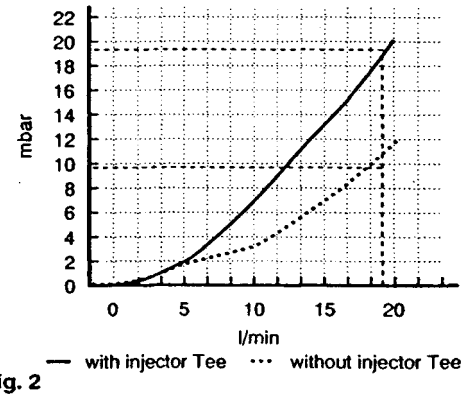

Fig. 2

SEDBUK Declaration For Inset 2 50/4

The seasonal efficiency (SEDBUK) is 72 %

This value is used in the UK Government's Standard Assessment Procedure (SAP) for energy rating of dwellings.

The test data from which it has been calculated have been certified by 0086.

Bermuda Inset 2 Boiler 50/4

The Boiler is for use with Natural Gas only.

Heat Input	Max	Mid	Min
kW	18.79	17	15.2
Btu/h	64,100	58,070	51,850
Heat Output	Max	Mid	Min
kW	14.65	13.19	11.72
Btu/h	50,000	45,000	40,000
Burner Pressure	Max	Mid	Min
mbar	17	14	11
in wg	6.8	5.6	4.4
Water Content	Max		
litres	1 6		
gallons	0.35		
Thermocouple Output	9.5 - 11 5mv		
Gas Connection	R_c ½ (½ in BSPT)		
Water Connections	3 x 1 in BSP		
Electricity Supply	230V ~ 50Hz External fuse - 3 Amp Appliance Rating - 4.8 watt		
Controls	Multi-functional gas valve, mechanical thermostat, thermocouple with permanent pilot & atmospheric sensing device		
Gas Rate (after 10 mins)	$1.8m^3/h$ $(63.57ft^3/h)$		
Lifting Weight	32.1 kg (70.7 lbs)		
Dimensions	Height	516mm	
	Width	440mm	
	Depth	368mm	
Flue Diameter			
mm	125		
in	5		
Heat Exchanger	Cast Iron		
Low Head	(Min)		
mm	1000		
in	$39^3/_8$		
Water Content	Fully pumped or pumped heating with gravity hot water. Sealed system with optional overheat thermostat		

3.1 Water Circulating Systems

1. The appliance is suitable for open vented systems which are either fully pumped or pumped central heating with gravity domestic hot water.

2. An optional overheat thermostat kit is available where additional control protection is required and for sealed system applications. This must not be used on gravity systems.

3. **The following conditions should be observed at all times:**

- The static head must not exceed 30m (100ft) of water.
- The boiler must not be used with a direct cylinder.
- Drain cocks should be fitted to all system low points.
- All gas and water pipes and electrical wiring must be installed in such a way that they do not restrict the servicing of the boiler.
- Position isolating valves as close as possible to the circulating pump.

3.2 Treatment of Water Circulating Systems

For optimum performance after installation, this boiler and its associated central heating system must be flushed in accordance with the guidelines given in BS7593: 1992 “Treatment of water in domestic hot water central heating systems”. This must involve the use of a proprietary cleanser, such as BetzDearborn’s Sentinel X300 or X400, or Fernox’s Superfloc.

Full instructions are supplied with the products, but for immediate information please contact BetzDearbom (0151 420 9563) or Fernox (01799 550811).

For long term protection against corrosion and scale, after flushing it is recommended that an inhibitor such as BetzDearborn’s Sentinel X100, or Fernox’s MB-1 or Copal is dosed in accordance with the guidelines given in BS7593:1992.

Failure to flush and add inhibitor to the system will invalidate the appliance warranty.

It is important to check the inhibitor concentration after installation, system modification and at every service in accordance with the manufacturer’s instructions. (Test kits are available from inhibitor stockists.)

For information or advice regarding any of the above contact the Baxi Helpline.

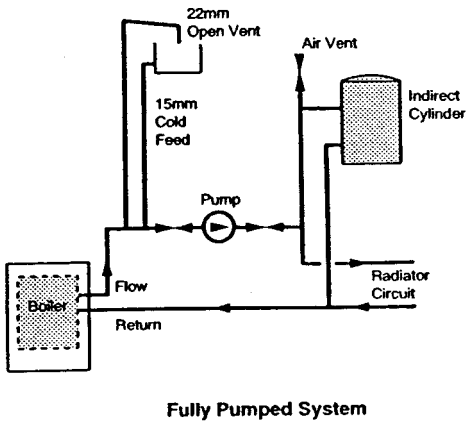

Fig. 3

3.3 Pipework

1. The sizes of the flow and return pipes from the boiler should be determined by normal methods according to the requirements of the system.

2. It is recommended that the system is designed for an 11°C (20° F) drop in temperature across the system.

3.4 System Controls

1. For optimum operating conditions, the system in which the appliance is installed should include a control system.

2. Such a system would comprise a timer control and a separate room and/or cylinder thermostat as appropriate.

3. The boiler should be controlled so that it operates on demand only.

4. It is not economical to rely on the boiler thermostat to control operation of the system.

3.5 Fully Pumped System (Fig. 3)

1. The sizes of the system pipes should be determined by normal methods.

2. The open vent pipe should be a minimum of 22mm and must rise continuously to a point above the teed and expansion tank.

3. The flow pipe from the boiler may form part of the vent pipe. No part of the open vent should contain a valve.

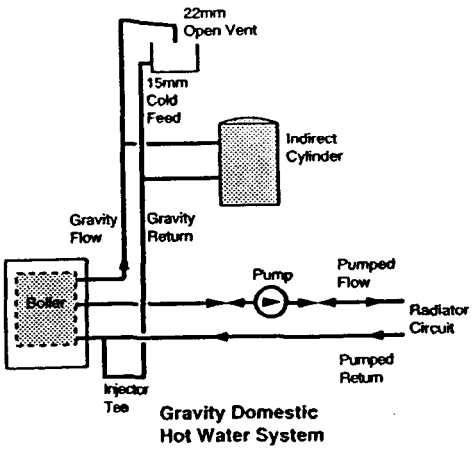

Fig. 4

3.6 Overheat Kit & Sealed Systems

1. An overheat thermostat kit is available to facilitate the installation of a Bermuda Inset 2 boiler to systems incorporating a combined feed and vent and to flats and dwellings where the building design prevents the boiler vent pipe rising continuously to the feed and expansion tank. (This must not be used on gravity systems.) Baxi Part N° 234885.

2. The boiler can be applied to a sealed system with the use of the overheat kit.

3. Information regarding the application of the overheat thermostat is included with the kit.

3.7 Storage Systems

1. For information regarding the use of a Bermuda Inset 2 boiler with a storage system, contact the appropriate storage system manufacturer.

3.8 Pumped Heating & Gravity Hot Water (Fig. 4)

1. The sizes of system pipes should be determined by normal methods.

2. The gravity flow pipe should rise vertically as close as possible to the boiler, avoiding sharp bends and tight elbows.

3. The open vent pipe should be a minimum of 22mm and must rise continuously to a point above the feed and expansion tank.

4. The flow pipe from the boiler may form part of the vent pipe.

5. No part of the open vent should contain a valve.

6. The brass injector tee must be fitted to the boiler return on all systems incorporating a gravity circuit.

7. The circulating head should not be less than 1 m (3ft) with a maximum horizontal run of 3m (10ft) when using 28mm pipes. Smaller pipe sizes and longer horizontal runs are acceptable with suitably increased circulating heads.

8. The gravity circuit should be designed with a minimum of restriction, avoiding possible air traps and long horizontal runs.

9. The system should be designed to prevent gravity circulation in the heating system when the pump is not running.

4.0 Site Requirements - Page 9

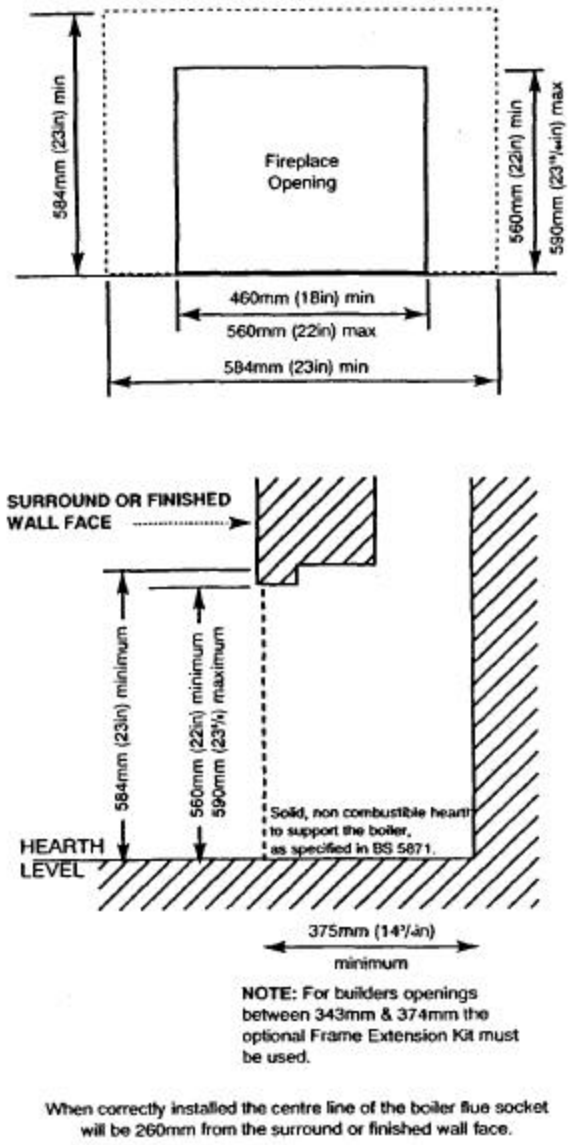

Fig. 5

4.1 Builders Opening (Fig 5)

1. The boiler unit is designed to fit within a standard builders opening, the minimum dimensions of which are as shown.

Height	584mm (23in)
Width	584mm (23in)
Depth	375mm (14¾in)

2. The opening should be soundly constructed of brick, pre-cast concrete or be a proprietary builders opening.

3. The base of the opening should be sound and non-combustible and must be flat and level.

4. The base of the builders opening should be at the same height as the finished level of the hearth.

IMPORTANT: If a false chimney breast is intended to house the boiler, a simulated builders opening, within the breast, must be provided.

5. The builders opening must not communicate with voids, pipe ducts or spaces other than the room in which the appliance is situated.

4.2 Location

1. The appliance must be installed in the living space of a dwelling.

2. Restrictions to the siting of the appliance are covered by BS 5546. The appliance may not be installed in bathrooms, shower rooms, bedrooms or bed sitting rooms.

4.3 Fireplace Opening & Surround

1. If a fireplace surround is to be used, it must be centrally placed and have opening sizes and a vertical flat area as detailed in the Installation and Servicing Instructions for the fire.

4.4 Frame Extension Kit

1. If the depth of the builders opening is less than the 375mm minimum specified, it can be increased by the use of the Frame Extension Kit.

2. Kit N° 234887 is suitable for use with Inset 2 TS, BS and FS models.
For Inset 2 KS, Kit N” 239341 must be used.

3. Full installation details are included in the kit.

4.5 Flue

1. The flue installation must conform to BS 5440 Pt 1. The flue must have a minimum vertical height of 3m (10ft) and have a minimum internal cross section area of 12,700 mm^2 ($20in^2$), this is satisfied by a flue of 125mm (5in) internal diameter.

A suitable terminal is required for all installations.

2. 9in x 9in Brick
Flues previously used for other fuels must be thoroughly swept. The flue must be lined with a 125mm (5in) flexible liner. The bottom of the liner should terminate 500mm (20in) above the base of the builders opening. The flue must be sealed between the liner and the brickwork at both the top and bottom.

An approved terminal must be installed.

3. Acid Resistant Liner
A flue constructed of acid resistant liners is satisfactory provided the size requirements are met. The boiler flue outlet can be connected to the flue by means of a short length of 125mm (5in) of flue pipe. A seal must be made in the annular space between the outer face of this flue pipe and the acid resistant liner.

An approved terminal must be installed.

4. Precast Flues
These must conform to BS 5440 Pt 1 and be correctly installed without intrusion of cement into the flue passage.

An approved terminal must be installed.

5. Proprietary Flues
A flue of this type must meet the size requirements specified and be installed in accordance with the flue manufacturers recommendation and relevant codes of practice.

An approved terminal must be installed.

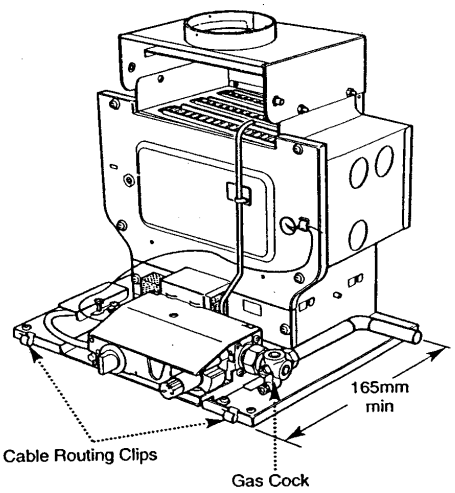

Fig. 6

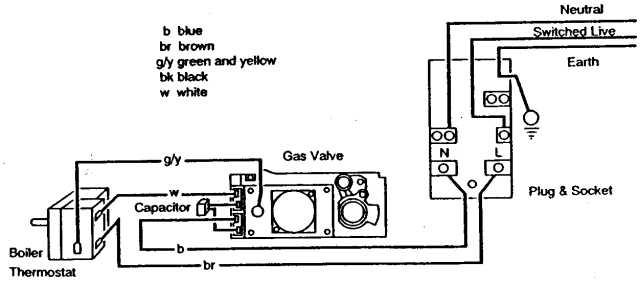

Illustrated Wiring Diagram

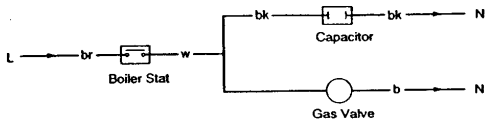

Functional Flow Diagram

4.6 Ventilation

1. Ventilation air supply to BS 5440 Pt 2 is required. The permanent ventilation area size requirements are as shown:

80.1cm^2 (12.42in^2)

2. The permanent vent may be directly into the room containing the appliance. The vent may also be sited in another (not a bedroom, toilet, bathroom or kitchen) room provided an interconnecting vent is used.

3. The vent must not be installed inside the builders opening. The vent should be sited following good practise for a habitable room. We recommend the use of the Stadium BM720 “Black Hole” ventilator which is available from your local merchant.

4.7 Gas Supply (Fig. 6)

1. The gas installation should be in accordance with BS 6891. The connection at the appliance is Rc ½ (½ in BSPT internal) located at the rear of the gas cock.

2. Ensure the pipework from the meter to the appliance is of adequate size. It is necessary to route the gas supply pipe to the right hand side of the builders opening. It must be routed so as not to restrict the installation and servicing of the appliance.

4.8 Electrical Supply (Fig. 7)

1. External wiring must be correctly earthed, polarised and in accordance with current IEE wiring regulations. The mains supply is 230V ~ 50Hz fused at 3A **A permanent live supply is required for Deluxe Model Firefronts.**

NOTE: The method of connection to the electrical supply must facilitate complete electrical isolation of the appliance. Connection may be made via a fused double pole isolator with a contact separation of at least 3mm on all poles and serve the appliance and system controls only.

2. The cable within the builders opening should be 0.75mm^2 to IEC 53 code 227 (heat resistant).

3. It is preferable to route the electrical supply cable to the left hand side of the builders opening. If however it must come from the right hand side it must be routed via the clips provided and not restrict the servicing of the appliance (Fig. 6).

4. The cable must be routed to avoid contact with the metal combustion box and hood.

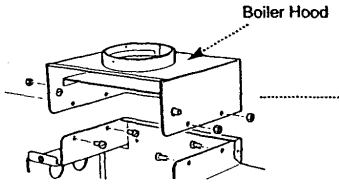

Fig. 8

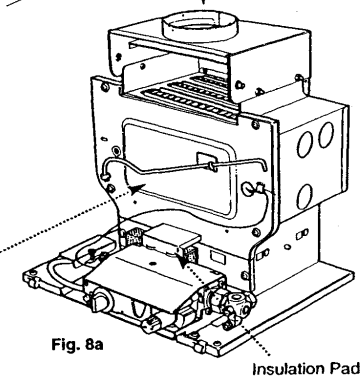

Fig. 8a

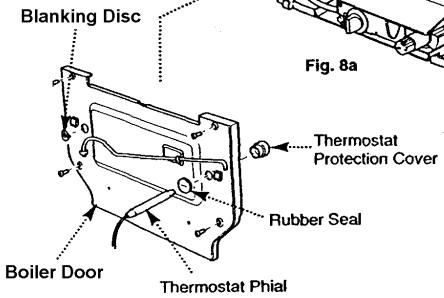

Fig. 9

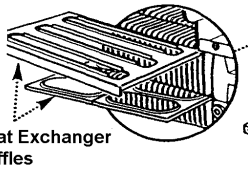

Fig. 10

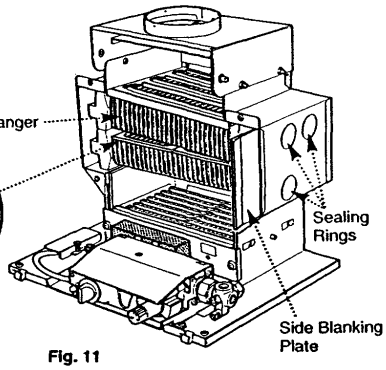

Fig. 11

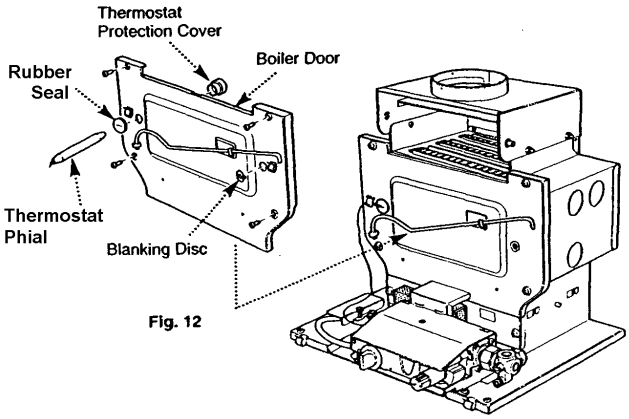

Fig. 12

5.1 Initial Preparation

1. Remove the outer carton from the boiler pack and locate the fitting kit. Remove and discard the packing pieces.

2. Remove the boiler hood from it's packing on top of the boiler. The hood may be fitted now or when the boiler is in situ. Use the four nuts and set screws provided (Fig. 8).

3. The boiler as supplied has the flow and return water connections at the left hand side of the appliance.

5.2 For installations requiring the water connections at the right hand side proceed as follows:

1. Remove the thermostat capillary from its clip. Withdraw the thermostat phial from the pocket. Lift away the insulation pad (Fig. 8a) and unfasten the four screws retaining the boiler door and remove. Remove the rubber seal and thermostat protection cover (Fig. 9).

2. Lift out the 3 heat exchanger baffles, noting their orientation (Fig. 10).

3. Lift the heat exchanger from the appliance and remove the side blanking plate (Fig. 11).

4. Transfer the 3 sealing rings from the holes in the left hand side of the boiler to those in the right (Fig. 11).

5. Rotate the heat exchanger to place the water connections at the right hand side, return the heat exchanger to the combustion box.

DO NOT TURN THE HEAT EXCHANGER UPSIDE DOWN

NOTE: The heat exchanger is correctly oriented when the three water connections line up with the holes in the right hand side of the combustion box and the thermostat pocket aligns with the corresponding hole in the door. The unfinned heat exchanger water tubes face the burner.

6. Remove the blanking disc from the left hand hole in the boiler door and replace with the rubber seal and thermostat protection cover. Fit the blanking disc into the right hand hole (Fig. 12).

7. Replace the heat exchanger baffles and blanking plate. Refit boiler door. Refit the thermostat phial into the pocket.

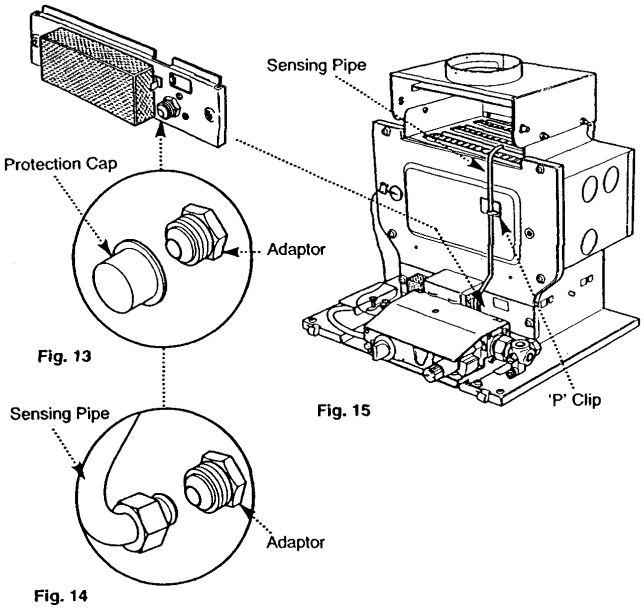

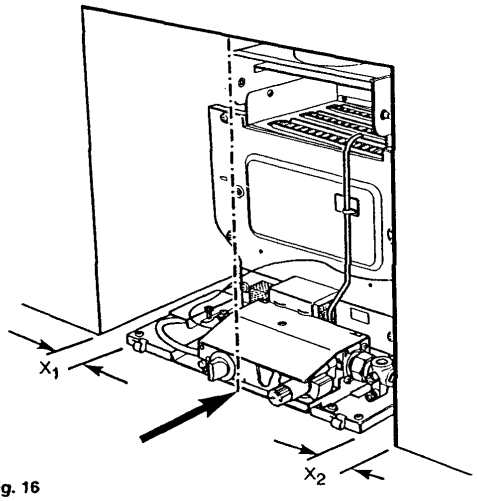

Fig. 16

NOTE: X_1 and X_2 must be equal

5.3 Connecting the Sensing Pipe

1 Remove the protection cap from the sensing pipe adaptor on the burner mounting plate. Slacken the screw retaining the sensing pipe 'P' clip (Fig. 13 & 15).

2. Manoeuvre the pipe so that the flared end aligns with the adaptor. Engage the nut on the adaptor and tighten finger tight. Tighten the 'P' clip retaining screw and tighten the nut onto the adaptor using a suitable spanner (Fig. 14 & 15).

IMPORTANT: The sensing pipe must be connected to enable the appliance to function safely and correctly.

5.4 Siting the Boiler

1. **The fireplace and builders opening should be as described under '4.0 Site Requirements' and be clean, sound and level.**

2. The flue should be installed as described under '4.0 Site Requirements'.

3. It may be desirable to insert the required fittings into the heat exchanger at this point, depending on the size of the fireplace opening and whether or not the gravity injector tee is to be used.

4. Locate the centre line of the finished opening and hearth (Fig. 16).

5. Hold the boiler by its combustion box at either side of the heat exchanger, lift from the packing base and place into the opening.

6. Align the boiler centrally using the "V" mark on the front centre of the appliance base. Check the distance between each side of the base and opening. They should be equal (Fig. 16).

7. The front edge of the base tray must align with the finished front face of the wall or surround.
This is important for correct installation of the firefront.

5.5 Securing the Boiler

1. It is important that the boiler is secured to the base of the builders opening.

2. Check the alignment within the opening is correct.

3. The hearth should be drilled as follows: Mark the hearth through the two slots in the base. Remove the boiler and drill the hearth. Insert the plugs supplied in the kit. Replace the boiler. Secure the boiler with the two screws.

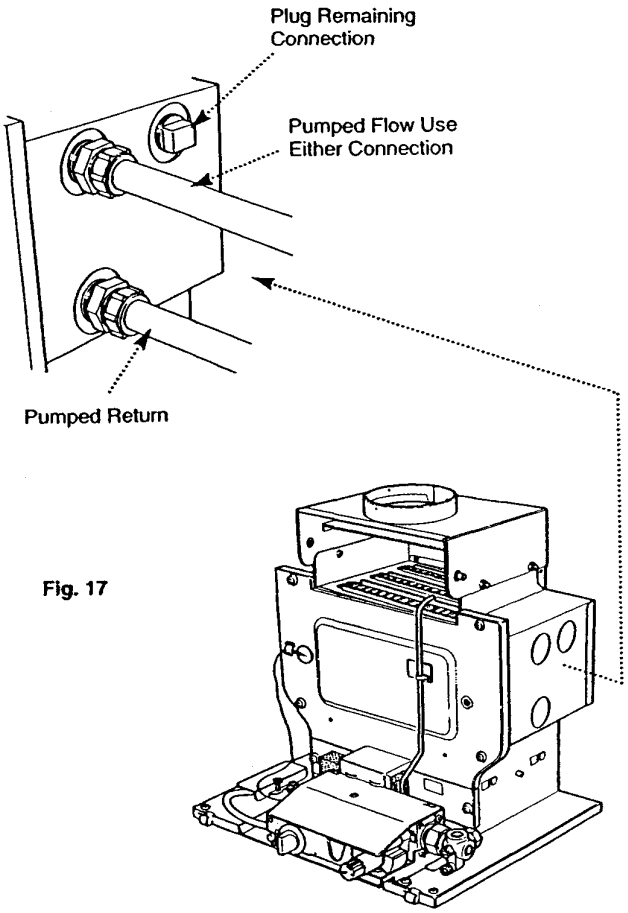

Fig. 17

5.6 Water Connections

1. The boiler has one return and two flow tappings. Rc1 (1in BSP). The flows are the two upper tappings. The return is the lower position tapping and is marked RETURN. It is essential the flow and return pipes are connected to the correct tappings.

5.7 Fully Pumped Systems (Fig. 17)

1. A 1in x 22mm threaded adaptor, compression nut and olive are provided in the kit for the return connection.

2. The 1in x 22mm threaded adaptor provided must be fitted to the lower tapping marked RETURN. Connect the pumped return into the adaptor using the nut and olive.

3. Fit a 1in x 22mm threaded adaptor into one of the higher tapping positions marked FLOW and connect the pumped flow into the adaptor.

4. Fit a 1in plug to the remaining connection.

6. Follow the instructions under ‘System Details’ as regards the vent pipe and cold feed.

5.8 Overheat Thermostat

1. For systems requiring an overheat thermostat, an optional kit is available. (Baxi Part N° 234885). The flow pipe arrangement for this type of installation is covered in the instructions supplied with that kit.

2. This kit is not suitable for systems where a gravity domestic hot water circuit is used.

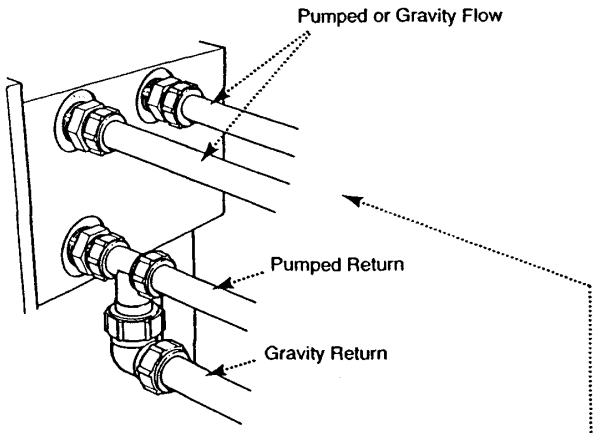

Fig. 18

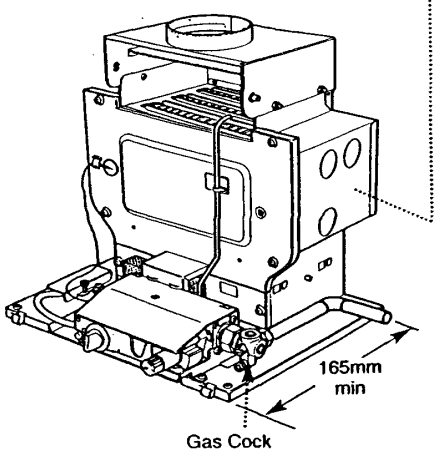

Fig. 19

5.9 Pumped Heating & Gravity Hot Water (Fig. 18)

1. A 1in x 22mm threaded adaptor, two compression nuts and olives and a brass injector tee piece are provided in the kit for the return connection.

NOTE: The injector tee must be fitted to the return of all systems with gravity domestic hot water.

2. The 1in x 22mm threaded adaptor provided must be fitted to the lower tapping marked RETURN.

3. Fit the injector tee into the adaptor. The injector tee may be oriented as shown to facilitate connection to the gravity return pipework.

4. Connect the pumped return to the 22mm compression fitting of the injector tee..

5. Take the gravity hot water return pipe to a level beneath that of the injector tee and connect upwards to the 28mm branch of the injector tee, oriented as shown.

6. Connect the pumped flow to one of the connections marked FLOW. Connect the gravity flow to the remaining connection.

7. The gravity flow pipes must rise vertically as close as possible to the appliance. Ensure the pipework is routed such that it does not introduce an airlock in the boiler.

8. Follow the instructions under system details as regards the vent pipe and cold feed.

5.10 Gas Connection (Fig. 19)

1. Connection to the gas supply is Rc ½ (½ in BSPT) internal located at the rear of the gas cock. The gas supply pipe must be routed from the right hand side.

2. The positioning of the gas supply pipe must not restrict the servicing of the appliance or installation of the fire.

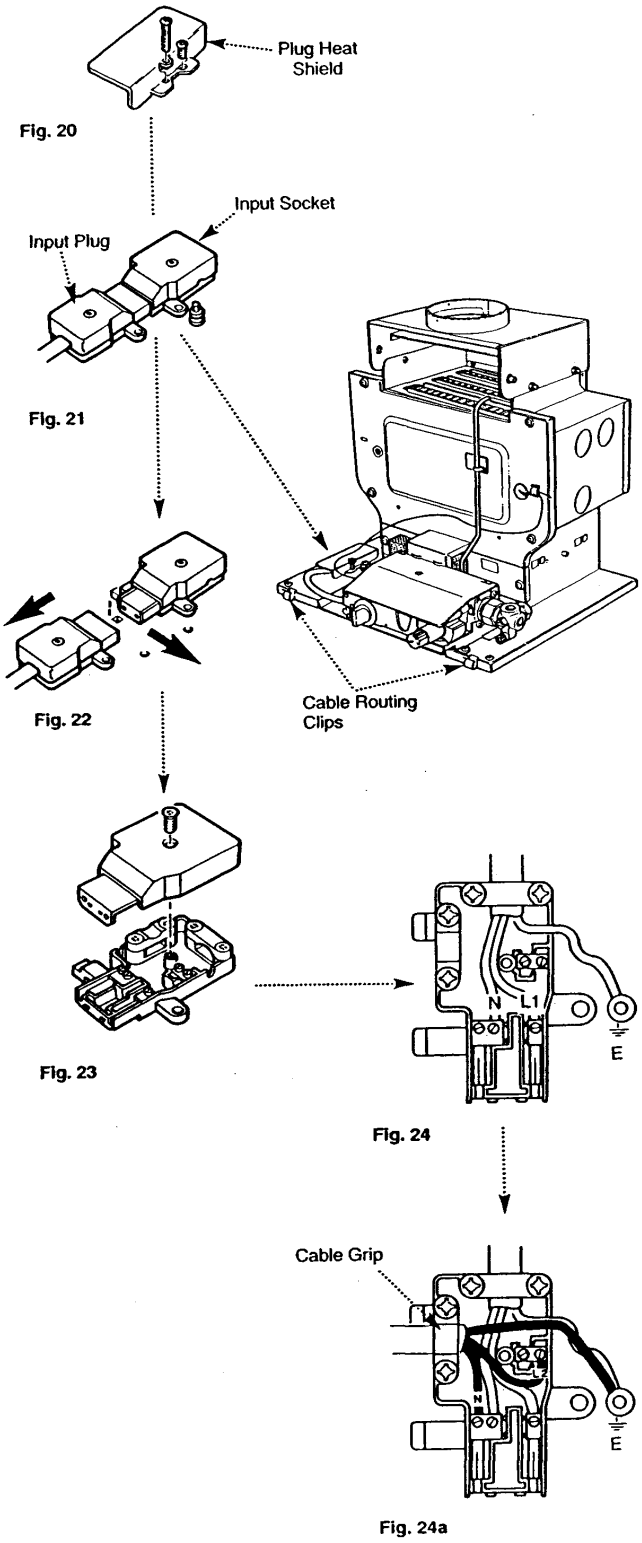

5.11 Electrical Connection

1. The appliance requires an electrical supply from the heating controls system.

2. **A permanent live supply is required for Deluxe Model Firefronts.**

WARNING: The appliance must be earthed. The input cable for the appliance should be 0.75mm^2 to IEC Code 227 (heat resistant). The system external controls and the appliance must be supplied by the same isolator.

5.12 Making the Electrical Connection

1. Undo the two screws holding the electrical plug, socket and heat shield to the left hand side of the base tray (Fig. 20).

2. Disengage the lugs on the socket from their slots (Fig. 21). Pull the mains input plug from the inlet socket (Fig. 22).

3. Remove the screw and cover from the socket (Fig. 23).

4. Remove the rear cable grip and connect the supply cable (Fig. 24) as follows:
   - Control system switched live to L1
   - Control system neutral to N
   - Earth to the terminal screw adjacent to the input plug

5. For Deluxe firefronts connect the permanent live supply L2 (Fig. 24a). Remove the side cable clamp and connect the wire from the firefront kit as indicated
   - Brown (live) to L2
   - Blue (neutral) to N
   - Green & Yellow (earth) to the terminal screw adjacent to the input plug.

6. The earth wire(s) should be sufficiently long that if the supply cable is pulled the live and neutral wires become taut before the earth.

7. Replace the cable grip(s), ensuring the outer insulation is firmly held and replace the socket cover and screw.

8. Refit the socket to the plug and re-engage the tugs in the base tray. Resecure with the two screws, locating the heat shield with the forward screw.

9. Ensure that all cables are routed away from the boiler casing and hood, making use of the clips on the front edge of the boiler base tray as required.

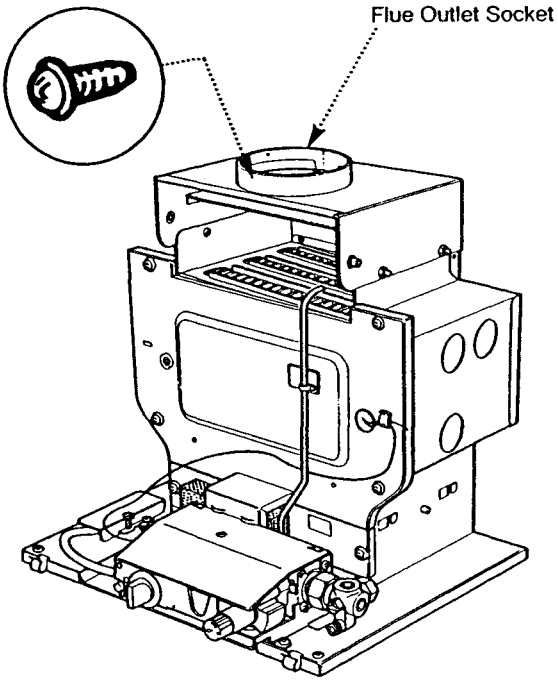

Fig. 25

5.13 Overheat Thermostat

1. Where an overheat thermostat kit is required, the wiring instructions supplied in the kit should be followed.

5.14 Flue Connection (Fig. 25)

1. If not already done so, fit the boiler hood now. Locate the flue within the flue socket and secure with the three self tapping screws provided in the kit.

2. Seal the flue against the flue outlet socket.

5.15 Completion

1. Seal off any secondary openings within the builders opening after wrapping the gas and water pipes through the brickwork and within the opening itself. (B.S. 5871 Part 1).

6.0 Commissioning the Appliance - Page 18

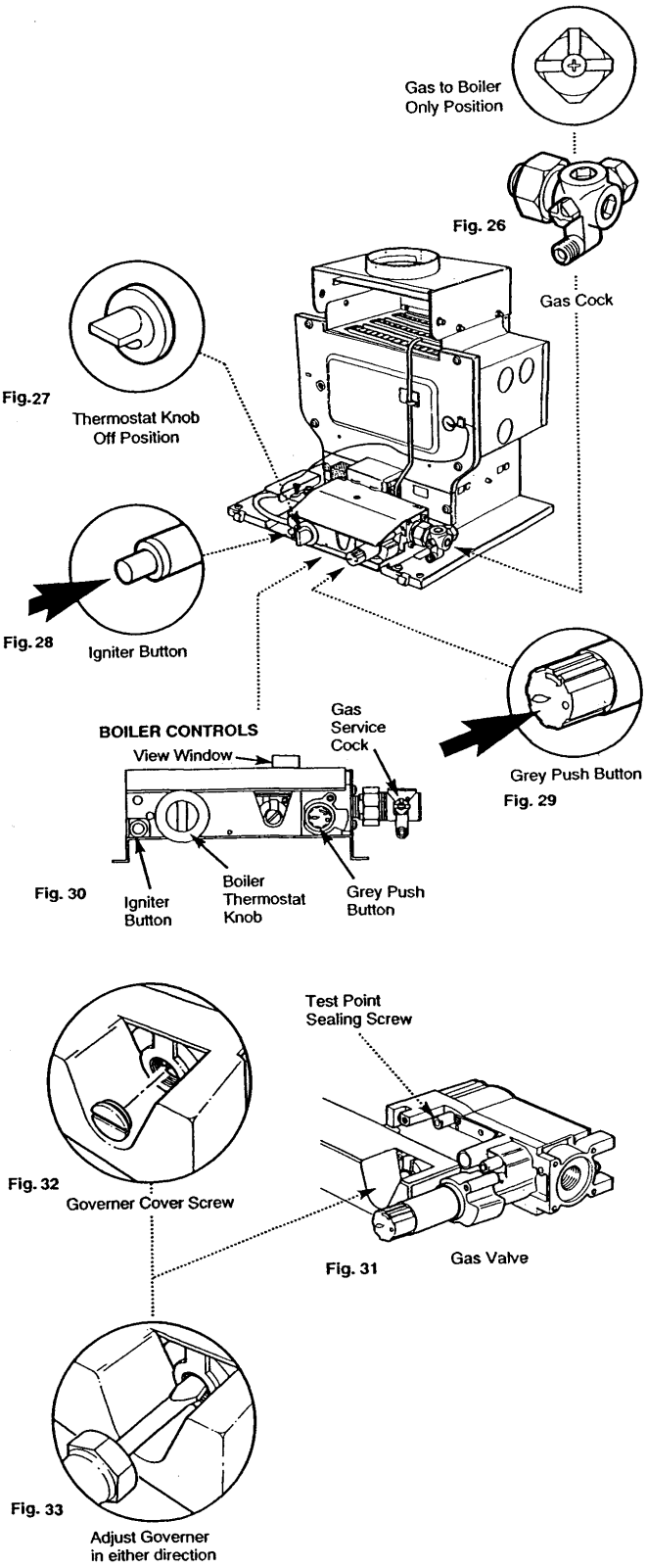

6.1 Commissioning the Appliance

1. Reference should be made to BS 5449 section 5 when commissioning the boiler and system. Flush the whole system in accordance with BS7593:1992. (See Treatment of Water Circulating Systems section 3.2). Check the system for leaks.

2. Turn the gas service cock ¼ turn from the off position (Fig. 26). This will supply gas to the boiler only. Purge the air from the gas service pipe in accordance with BS 6891 and test for gas soundness.

3. Turn the boiler thermostat to the OFF position (Fig. 27) and ensure that all external controls e.g. room stat, timer etc are calling for heat and turn on the mains electrical supply.

4. Slacken the test point sealing screw and connect a pressure gauge (Fig. 31).

5. Hold in the grey button on the gas control valve (Fig. 29), press the piezo igniter button and release (Fig. 28). Repeat until the pilot lights. Hold in the grey button for a further 15 seconds (Fig. 29).

6. The pilot should remain alight. If not, turn the grey button clockwise and wait 3 minutes before repeating the sequence.

7. The pilot side flame should be without a yellow tip and be approximately 16mm ($^5/_8$in) long. The pilot upper flame should be approximately 25mm (1in) long. It is not possible to adjust the pilot.

8. Operate the burner by turning the boiler thermostat knob to the HIGH setting and check the operation of the flame failure device by turning the grey button clockwise. The burner and pilot should extinguish.

9. Turn the boiler thermostat to the “O” position, wait 3 minutes and relight the pilot as previously described.

10. Operate the burner and allow the system to reach normal operating temperature. Make further checks for leaks and check the burner setting pressure, adjusting if necessary. This is done by removing the governor cover screw and adjusting the governor in either direction as required.

11. Remove the pressure gauge and tighten the pressure test point sealing screw.

12. The boiler and system should be run and then flushed and treated in accordance with BS7593: 1992 and the flushing agent/inhibitor manufacturers instructions. When all the air has been removed from the water circuit, the pump and radiators should be balanced to achieve the design temperature drop across the system.

13. Recheck the system for leaks. Turn the boiler thermostat to the required setting.

14. Carefully read and complete all sections of the “Benchmark” Installation, Commissioning and Service Record Log Book that are relevant to the appliance and installation. The details of the Log Book will be required in the event of any warranty work. The Log Book must be handed to the user for safe keeping and each subsequent regular service visit recorded.

7.0 Annual Servicing - Page 19

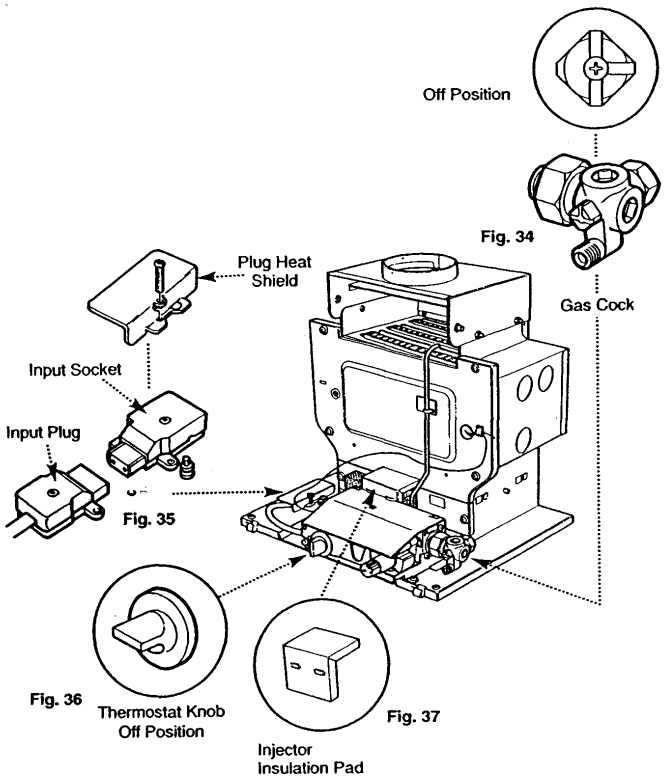

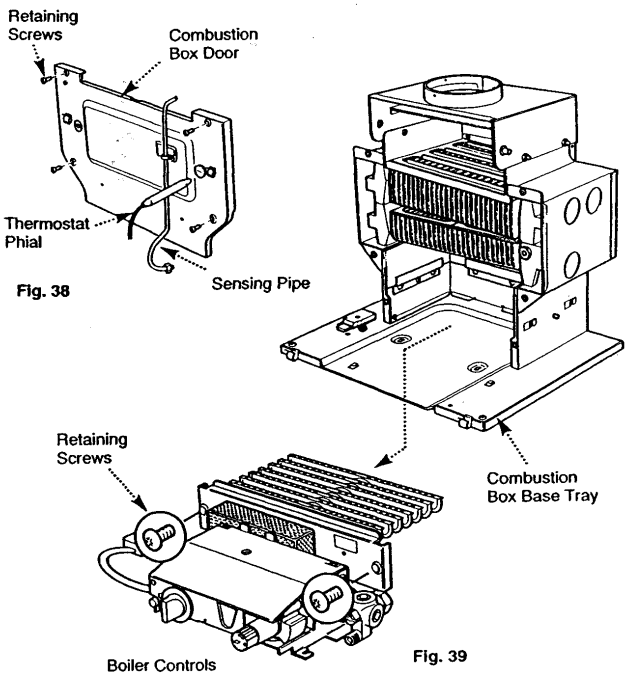

7.1 Annual Servicing

1. To perform annual servicing of the back boiler it is necessary to remove the firefront.

2. After servicing, complete the relevant section of the “Benchmark” Installation, Commissioning and Service Record Log Book. This should be in the possession of the user.

7.2 Removal of Firefront

1. Isolate the electrical supply to the appliance.

2. Turn the gas service tap to the off position (Fig. 34).

3. Refer to the separate firefront instructions for the removal of the firefront.

7.3 Removal of Controls

1. Turn the boiler thermostat to “O” position (Fig. 36).

2. Undo the retaining screw and remove the heat shield and electrical plug from the socket (Fig. 35).

3. Disconnect the union at the gas service cock and remove the fire feed pipe.

4. Remove the thermostat phial from the boiler (Fig. 38).

5. Lift and remove the injector insulation pad (Fig. 37).

6. Undo the nut on the sensing pipe at the adaptor.

7. Undo the four screws retaining the door and remove the door (Fig. 38).

8. Undo the two screws retaining the controls to the combustion box sides (Fig. 39).

9. Slacken the screw holding the controls to the combustion box base tray.

10. Withdraw the controls from the boiler.

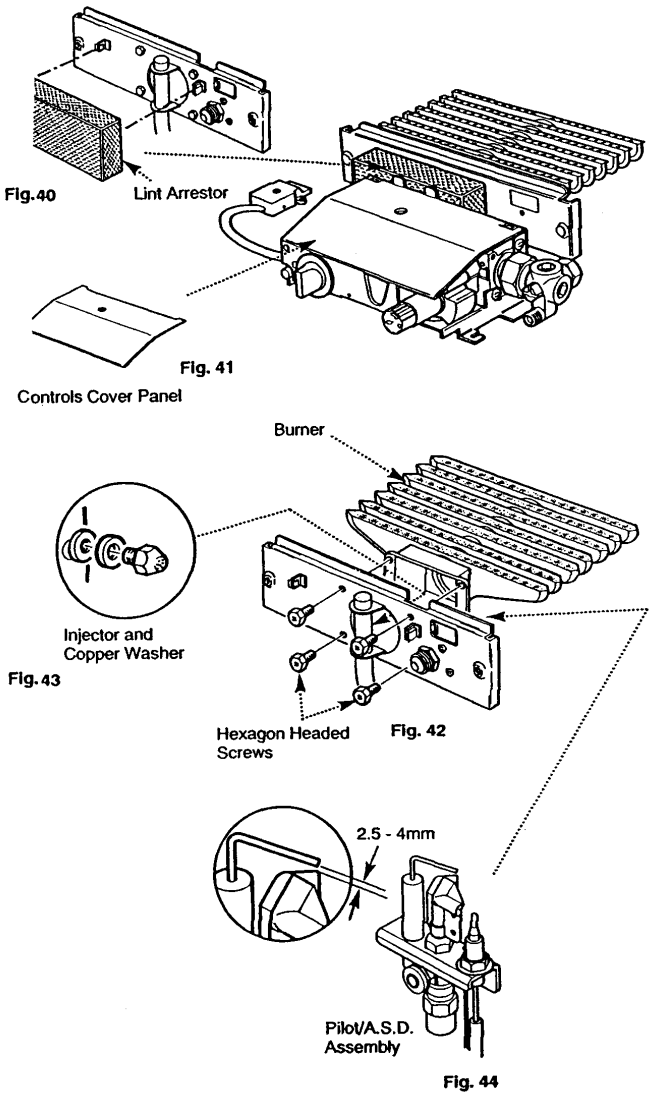

7.4 Cleaning the Lint Arrestor

1. Remove the controls cover panel from its retaining clips (Fig. 41).

2. Remove the lint arrestor from the controls and clean away any deposits (Fig. 40).

7.5 Cleaning the Burner & Main Injector

1. Remove the four hexagon headed screws holding the burner to the burner mounting plate (Fig. 42).

2. Carefully clean any deposits from the burner blades and venturi inlet (Fig. 42).

3. Remove the injector from the feed pipe, retaining the copper sealing washer. Clean the injector and reassemble in reverse order (Fig. 43).

4. Reassemble the burner and pilot in reverse order and refit the lint arrestor.

7.6 Cleaning the Pilot/A.S.D. Assembly (Fig 44)

NOTE: No attempt should be made to clean the device using any hard tools, including pins or wire.

WARNING: The pilot/A.S.D. assembly must not be adjusted in any way.

1. The A.S.D. must not be altered so that it will not operate or be bypassed in any way.

2. Ensure that the pilot burner aeration hole is free from lint, debris etc.

3. If necessary clean the electrode and target, and check that the spark gap is 2.5 - 4.0mm.

4. The thermocouple cannot be changed as an individual component. The complete assembly must be replaced in the event of one or other component failure(s).

5. Only use a Genuine Baxi Spare Part.

6. Reassemble the burner in reverse order and refit the lint arrestor.

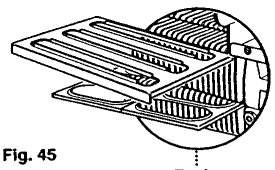

Fig. 45

Heat Exchanger Baffles

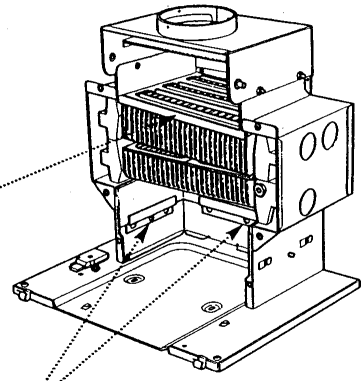

Fig. 46

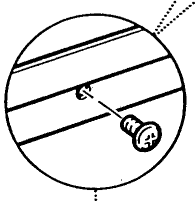

Fig. 47

Undo the Retaining Screws on the Support Brackets

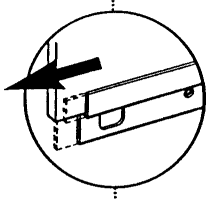

Fig. 48

Slide Rear Insulation Bracket Left Before Pulling Forward

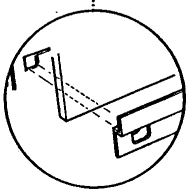

Fig. 49

Remove each Bracket and Insulation

7.7 Cleaning the Heat Exchanger

1. Remove the top and the centre baffles from the heat exchanger, noting their orientation (Fig. 45).

2. Remove the side and rear insulation pieces by undoing the screws retaining the support brackets and sliding the rear bracket to the left and both side brackets forward (Fig. 46, 47, 48 & 49).

3. Each bracket may then be removed along with the insulation.

4. Clean between the heat exchanger fins and flueways with suitable brushes and remove any deposits from the combustion box base tray.

5. Clean away any lint or other deposits from the boiler hood and builders opening.

6. Reassemble the insulation in reverse order and refit the baffles.

7. Reassemble the appliance in reverse order, re-greasing the thermostat phial if required.

8. Re-commission the appliance and check for gas soundness.

9. Complete the relevant section of the “Benchmark” Installation, Commissioning and Service Record Log Book and hand it back to the user.

8.0 Changing Components - Page 22

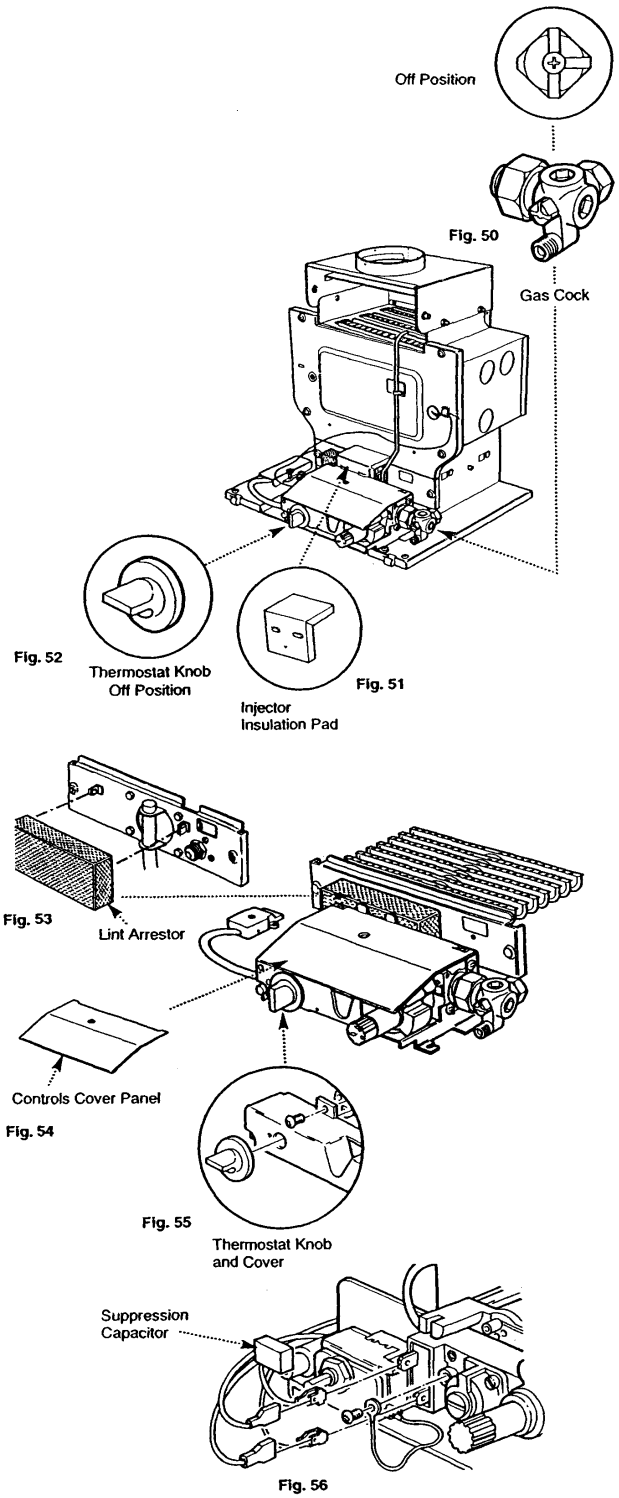

8.1 Changing Components

1. To change any components on the back boiler it is necessary to remove the fire front.

2. After changing any components carry out gas soundness checks.

8.2 Removal of Firefront

1. Isolate the electrical supply to the appliance.

2. Turn the thermostat knob to the off position (Fig. 52).

3. Turn the gas service tap to the off position (Fig. 50).

4. Refer to the separate firefront instructions for the removal of the firefront.

The following components can be changed with the controls in situ:- Lint Arrestor, Suppression Capacitor, Thermostat and Piezo Igniter Unit.

8.3 Lint Arrestor

1. Lift and remove the injector insulation pad (Fig. 51)

2. Remove the controls cover panel from its retaining clips (Fig. 54).

3. Remove the lint arrestor by pulling forward (Fig. 53).

4. Reassemble in reverse order.

To change the Suppression Capacitor, Thermostat and Piezo Igniter Unit proceed as follows:-

1. Remove the controls cover panel from its retaining clips (Fig. 54).

2. Remove the control knob (Fig. 55).

3. Undo the screw retaining the valve cover and remove the cover (Fig. 55).

8.4 Suppression Capacitor (Fig. 56)

1. Note the positions of the electrical connections on the valve and remove them.

2. Remove the capacitor connections from the valve.

3. Reassemble in reverse order.

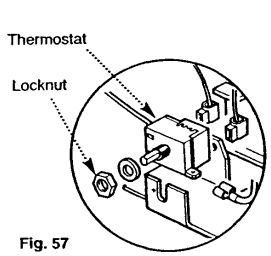

Fig. 57

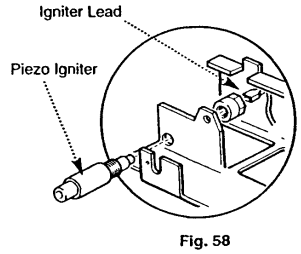

Fig. 58

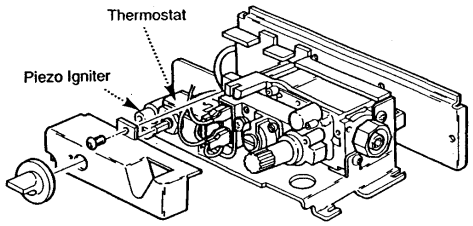

Fig. 59

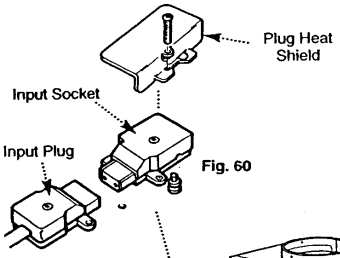

Fig. 60

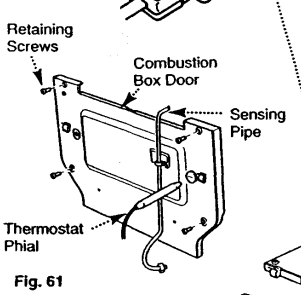

Fig. 61

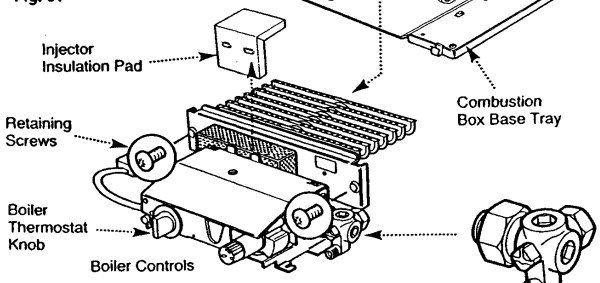

Fig. 62

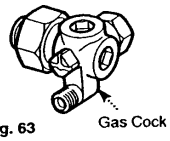

Fig. 63

8.5 Thermostat

1. Withdraw the thermostat phial from the boiler door (Fig. 61).

2. Undo the locknut retaining the thermostat to the controls mounting bracket (Fig. 57). Ease the thermostat away from the bracket and disconnect the electrical connections noting their positions.

3. Reassemble in reverse order.

8.6 Piezo Igniter Unit

1. Pull the igniter lead off the piezo and undo the plastic locknut. Remove the piezo igniter unit (Fig. 58).

2. Reassemble in reverse order.

To change the Gas Valve, Burner and Main Injector, Electrode/Lead, and Pilot/A.S.D. Assembly proceed as follows:-

8.7 Removal of Controls

1. Turn the boiler thermostat to “O” (Fig. 62).

2. Undo the retaining screw and remove the heat shield and electrical plug from the socket (Fig. 60).

3. Disconnect the union at the gas service cock and remove the fire feed pipe.

4. Remove the thermostat phial from the boiler (Fig. 61).

5. Lift and remove the injector insulation pad (Fig. 62).

6. Undo the nut on the sensing pipe at the adaptor (Fig. 61).

7. Undo the four screws retaining the door and remove the door (Fig. 61).

8. Undo the two screws retaining the controls to the combustion box (Fig. 62).

9. Slacken the screw holding the controls to the combustion box base tray.

10. Withdraw the controls from the boiler.

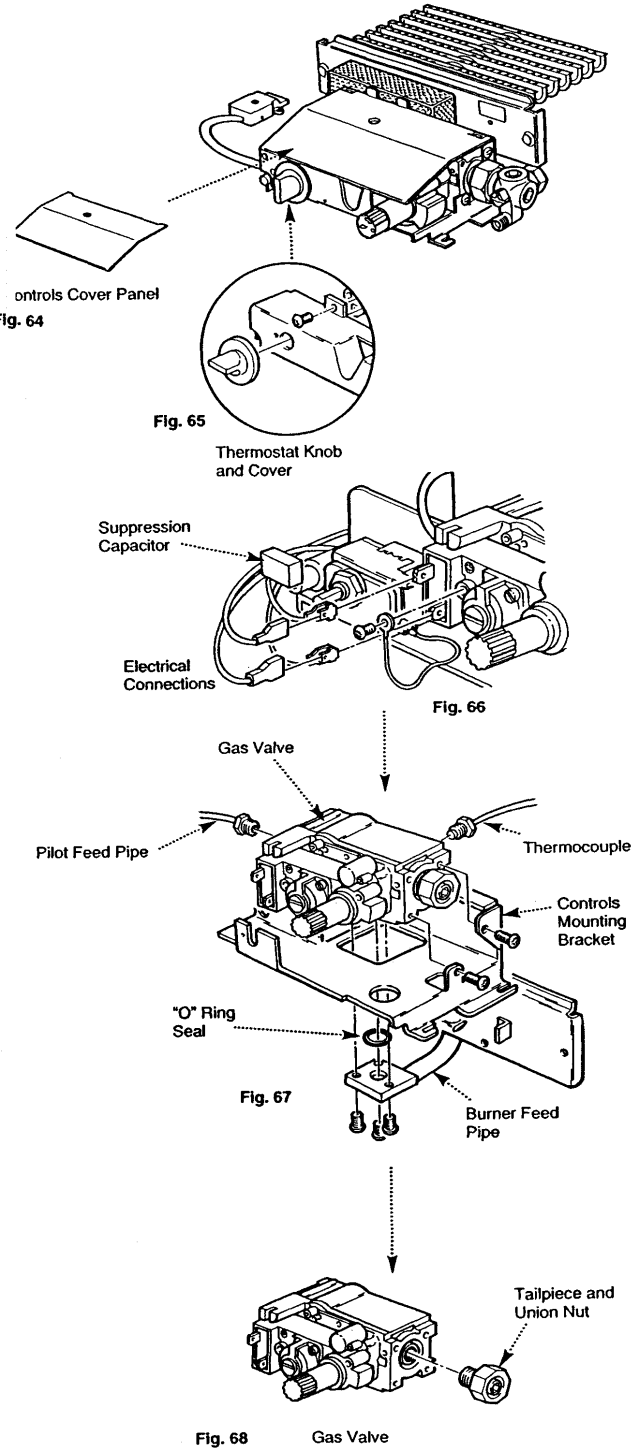

8.8 Gas Valve

1. Remove the controls cover panel from its retaining clips (Fig. 64).

2. Remove the control knob (Fig. 65).

3. Remove the screw holding the valve cover to the controls mounting bracket and remove the cover (Fig. 65).

4. Disconnect the electrical connections from the valve, noting their positions (Fig. 66).

5. Remove the two screws holding the valve to the controls mounting bracket adjacent to the union nut and tailpiece (Fig. 67)

6. Undo. the pilot feed pipe. nut and thermocouple from the valve (Fig. 67).

7. Remove the three screws holding the burner feed pipe to the gas valve (Fig. 67).

8. Remove the valve from the controls mounting bracket (Fig. 67).

9. Remove the tailpiece and union nut from the original valve and fit to the new one (Fig. 68).

10. **Reassemble in reverse order, ensuring the new "O" ring seal is fitted between the burner feed pipe and gas valve.**

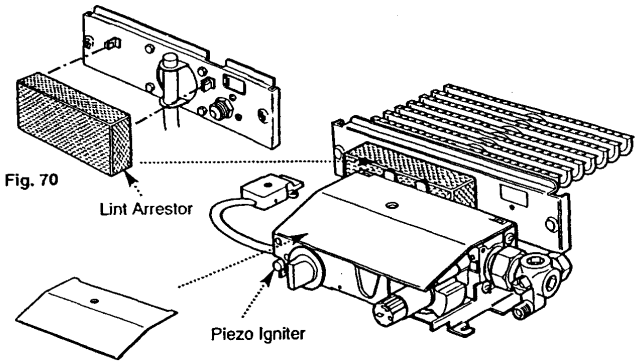

Fig. 69

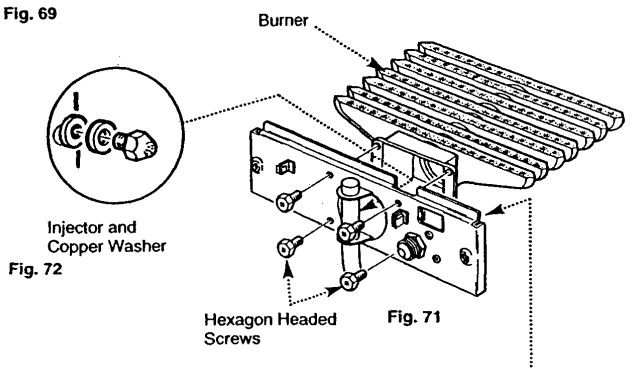

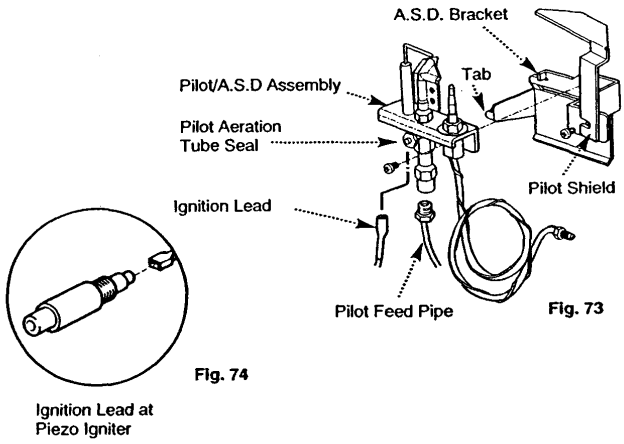

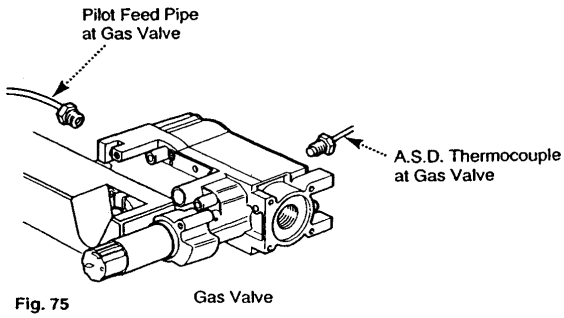

Fig. 75

8.9 Burner & Main Injector

1. Remove the controls cover panel from its retaining clips (Fig. 69).

2. Remove the lint arrestor by pulling forward (Fig. 70).

3. Remove the four hexagon headed screws holding the burner to the mounting plate (Fig. 71).

4. If required the main injector can be unscrewed from the feed pipe and replaced. The copper sealing washer must be retained for re-use or replace if damaged (Fig. 72).

5. Reassemble in reverse order.

8.10 Pilot/A.S.D. Assembly

WARNING: The Pilot/A.S.D. Assembly should not be adjusted in any way. The A.S.D. must not be altered so that it will not operate or be bypassed in anyway. The thermocouple cannot be changed as an individual component. The complete assembly must be replaced in the event of one or other component failure(s). Only use a Genuine Baxi Spare Part.

1. Remove the controls cover panel from its clips if not already done so (Fig. 69).

2. Remove the A.S.D. thermocouple nut at the rear of the valve (Fig. 75). Remove the ignition lead from the A.S.D. electrode and piezo igniter (Fig. 73 & 74). Undo and remove the pilot feed pipe at the A.S.D. and valve (Fig. 73 & 75).

3. Remove the three screws holding the burner feed pipe to the gas valve (Fig. 67 - page 24).

4. Undo the screw holding the A.S.D. bracket to the burner mounting plate and disengage the tab on the bracket from the plate. Undo the screw holding the A.S.D. to its bracket and remove the pilot shield (Fig. 73).

5. Fit the new A.S.D. onto the bracket (Fig. 73) and connect the ignition lead to the electrode. Ensure that the pilot shield is refitted.

6. Engage the tab on the A.S.D. bracket in the hole in the burner mounting plate. Ensure that the pilot aeration tube seal sits in the recess in the sensing pipe adaptor. Refit the retaining screw.

7. Reassemble in reverse order, ensuring the “O” ring seal between the burner feed pipe and gas valve is not damaged.

8.11 Ignition Lead

1. Remove the controls cover panel if not already done so. Pull the lead off the spade terminals on the piezo unit and the A.S.D. electrode (Fig. 73 & 74).

2. Reassemble in reverse order.

.0 Fault Finding - Pages 26 and 27

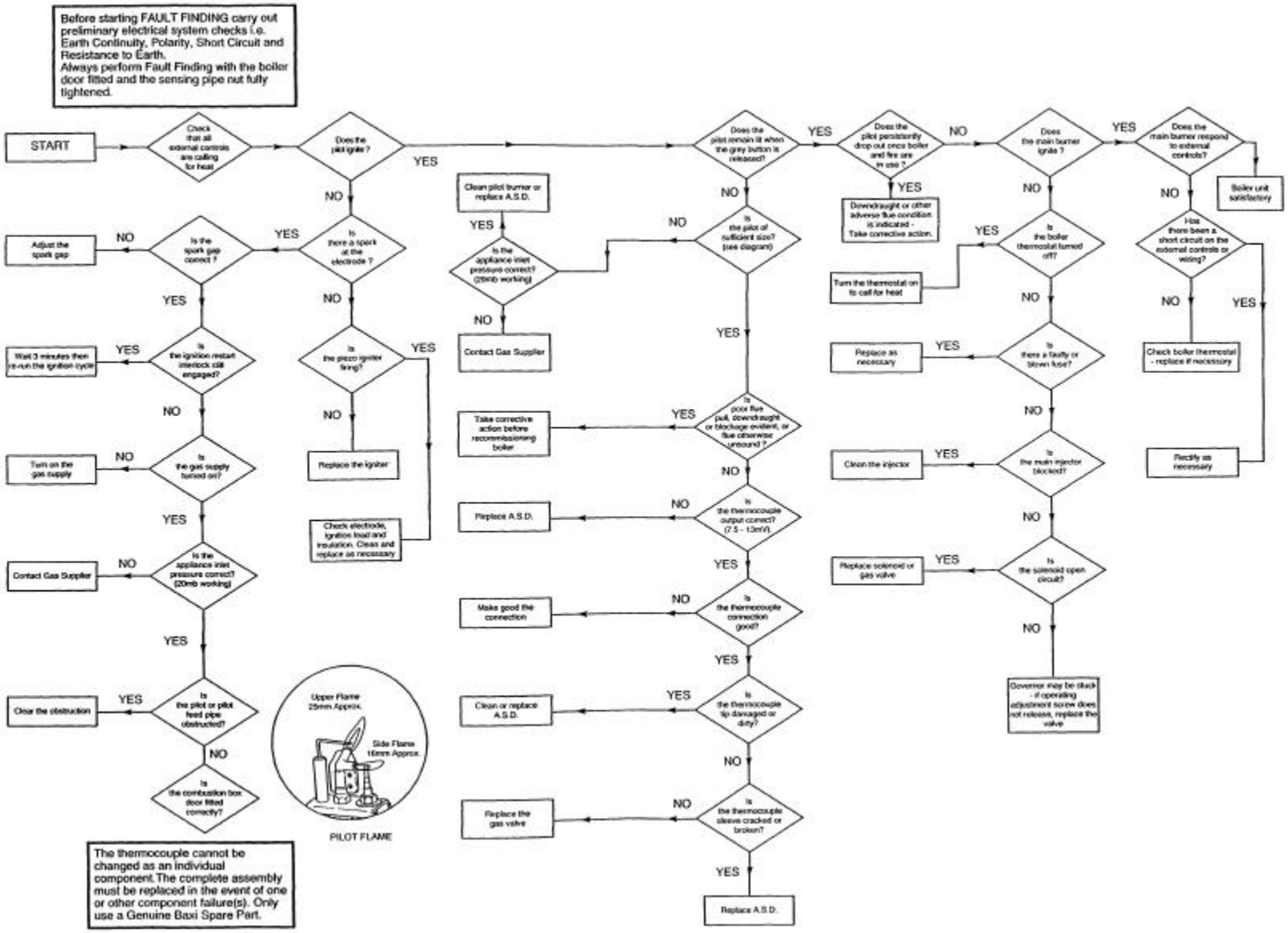

10.0 Short parts list - Page 28

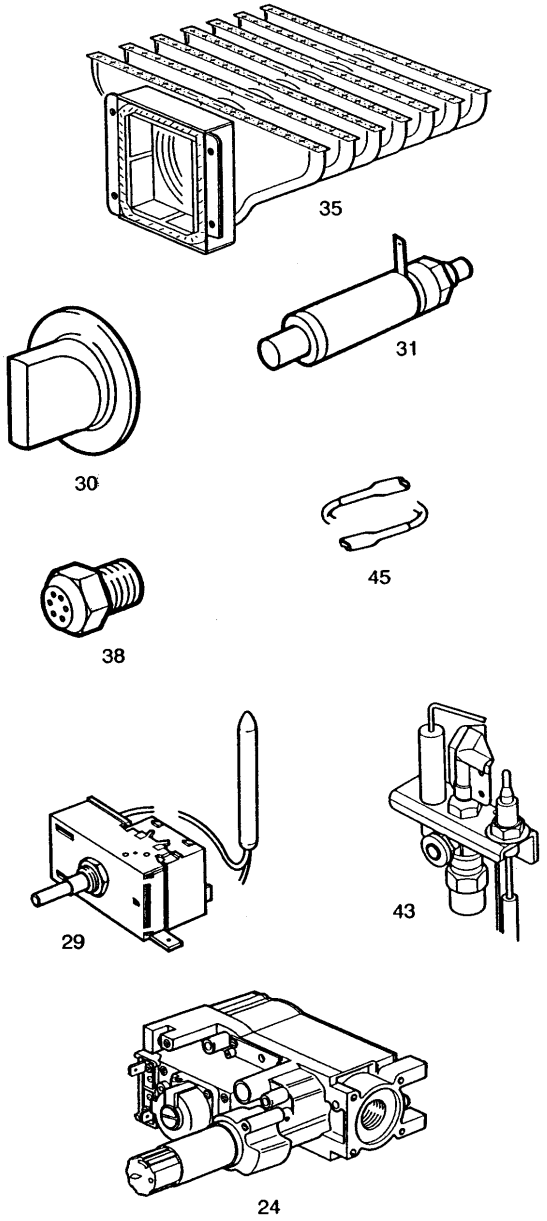

Key No.	G.C. No.	Description	Manufacturers Part No.
35	E01-564	Burner	233904
38	379 988	Injector B19	234014
45	E00-121	Ignition Lead	237811
24	E01-563	Kit Valve	239290
43	E00-119	Pilot/A.S.D. Assembly	237818
29	379 999	Thermostat	233952
30	183 630	Knob Thermostat	042717
31	183 936	Piezo Igniter Unit	040456

Click Here for Helplines

spares & parts online IBASIS.CO.UK