Please leave these instructions with the user

Baxi Bermuda Inset 3 Super

Fireside Gas Central Heating Units

Installation and Servicing Instructions

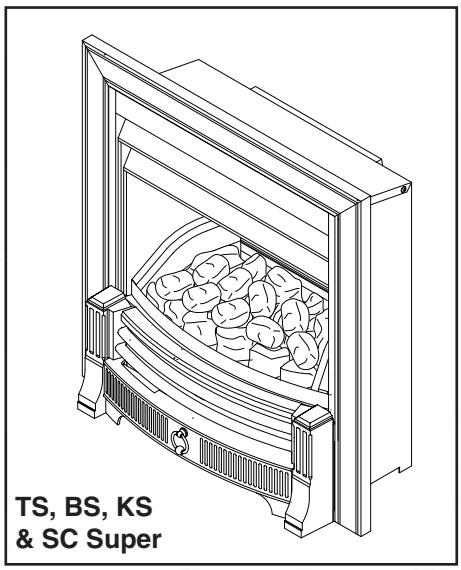

TS, BS, KS
& SC Super

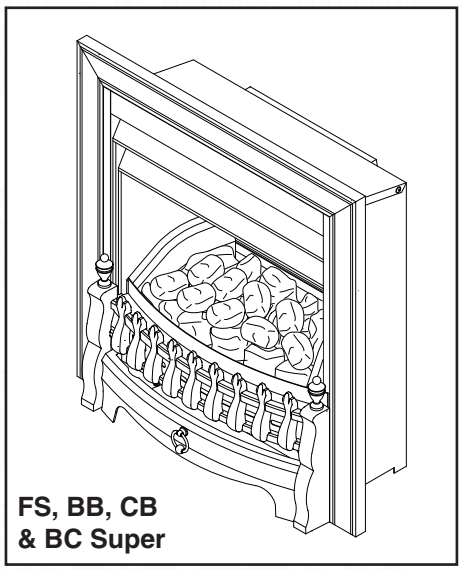

FS, BB, CB
& BC Super

BAXI

spares & parts online BASIS.CO.UK

Natural Gas

Baxi Bermuda Inset 3 BS Super
G.C.No. 37 075 56
Baxi Bermuda Inset 3 TS Super
G.C.No. 37 075 57
Baxi Bermuda Inset 3 KS Super
G.C.No. 37 075 54
Baxi Bermuda Inset 3 FS Super
G.C.No. 37 075 55

Baxi Bermuda Inset 3 BB Super
G.C.No. 37 075 62
Baxi Bermuda Inset 3 CB Super
G.C.No. 37 075 63
Baxi Bermuda Inset 3 SC Super
G.C.No. 37 075 64
Baxi Bermuda Inset 3 BC Super
G.C.No. 37 075 65

For use with the following boiler:

Baxi Bermuda Inset 2 Boiler 50/4 E
G.C.No. 44 075 03
Baxi Bermuda Inset 3 Boiler 50/5
G.C.No. 44 075 07

Baxi is one of the leading manufacturers of domestic heating products in the UK.

Our first priority is to give a high quality service to our customers. Quality is built into every Baxi product - products which fulfil the demands and needs of customers, offering choice, efficiency and reliability.

To keep ahead of changing trends, we have made a commitment to develop new ideas using the latest technology - with the aim of continuing to make the products that customers want to buy.

Everyone who works at Baxi has a commitment to quality because we know that satisfied customers mean continued success.

We hope you get a satisfactory service from Baxi. If not, please let us know.

Baxi is a BS-EN ISO 9001
Accredited Company

Codes of Practice, most recent version should be used

In GB the following Codes of Practice apply:

Standard	Scope
BS 6891	Gas Installation.
BS 5440 Part 1	Flues.
BS 5440 Part 2	Ventilation.
BS 5871 Part 2	Installation of inset live fuel effect fires.

In IE the following Codes of Practice apply:

Standard	Scope
I.S. 813	Domestic Gas Installations.

IMPORTANT - The addition of anything that may interfere with the normal operation of the appliance without express written permission from the manufacturer or his agent could invalidate the appliance warranty. In GB this could also infringe the **Gas Safety** (Installation and Use) **Regulations**.

IMPORTANT - Installation, Commissioning, Service & Repair

This appliance must be installed in accordance with the manufacturer's instructions and the regulations in force. Read the instructions fully before installing or using the appliance.

In GB, this must be carried out by a competent person as stated in the Gas Safety (Installation & Use) Regulations.

Definition of competence: A person who works for a CORGI registered company and holding current certificates in the relevant ACS modules, or valid ACoP equivalents, is deemed competent.

In IE, this must be carried out by a competent person as stated in I.S. 813 "Domestic Gas Installations".

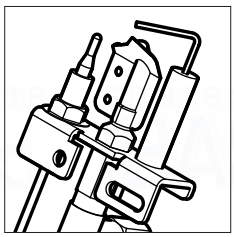

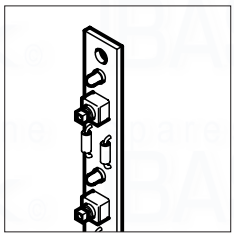

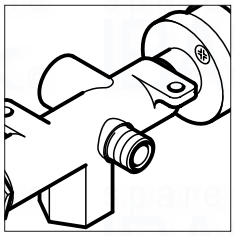

Contents

Section		Page
1.0	**Introduction**	4
2.0	**Technical Data**	5
3.0	**Site Requirements**	6
4.0	**Electrical**	8
5.0	**Installation**	9
6.0	**Commissioning the Fire**	13
7.0	**Arranging the Coals**	14
8.0	**Checking for Spillage**	16
9.0	**Annual Servicing**	18
10.0	**Changing Components**	21
11.0	**Fault Finding**	27
12.0	**Flow Charts**	28
13.0	**Short Parts List**	30

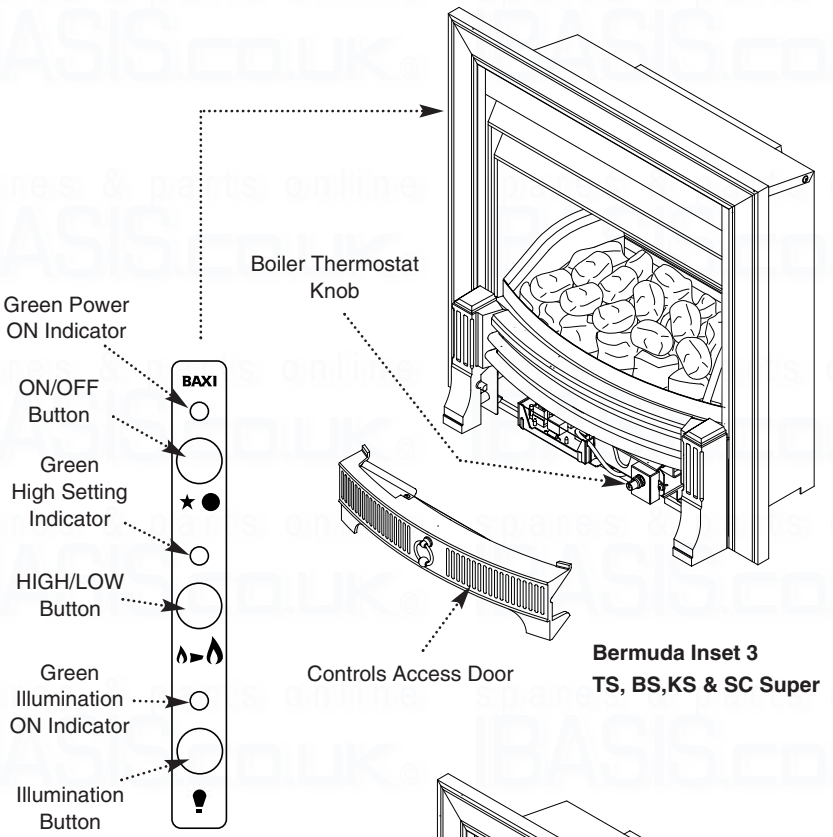

Fig. 1

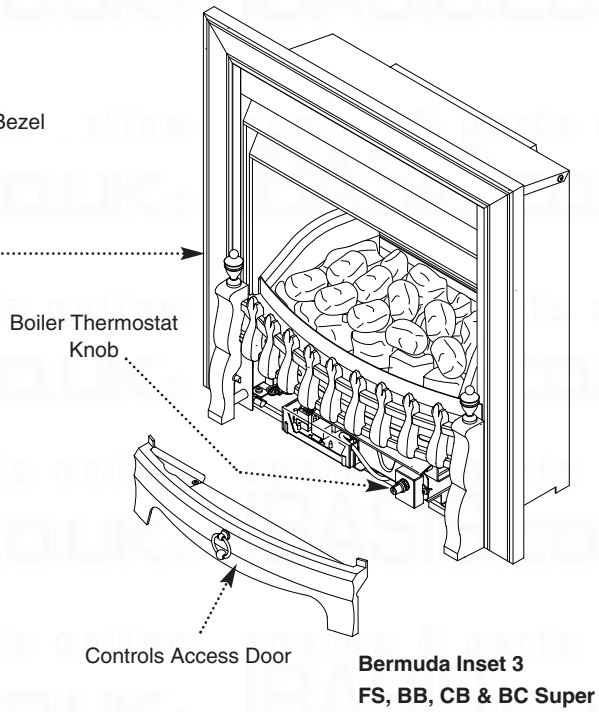

1.3 Important Information

This product uses fuel effect pieces containing Refractory Ceramic Fibres (R.C.F.) which are man-made vitreous silicate fibres. Excessive exposure to these materials may cause temporary irritation to eyes, skin and respiratory tract. Care must be taken when handling these articles to ensure the release of dust or fibres is kept to a minimum.

1.0 Introduction

1.1 Description

1. Your Baxi Bermuda Inset 3 Super is a central heating boiler combined with a gas fire. The firefront is of the Decorative Fuel Effect type and incorporates an optional illumination effect for use when the fire is off. The boiler will provide heating for the rest of the house and also domestic hot water if required. The boiler and fire are independently controlled.

2. The boiler and fire unit is designed to be used on **Natural Gas only.**

3. The fire is controlled by three switches situated on the upper left hand side of the fire surround (Fig. 1). The fire has three settings:

OFF LOW HIGH

4. The boiler controls are located behind the controls access door.

5. The boiler may be controlled by an external programmer or clock control (see separate instructions with the clock controller used). Manual control is available with the boiler thermostat control.

NOTE: The fire or illumination effect will not function in the event of a power failure.

1.2 Installation

The appliance is suitable only for installation in GB and IE and should be installed in accordance with the rules in force.

In GB, the installation must be carried out by a CORGI Registered Installer. It must be carried out in accordance with the relevant requirements of the:
- Gas Safety (Installation & Use) Regulations.
- The appropriate Building Regulations either The Building Regulations, The Building Regulations (Scotland), Building Regulations (Northern Ireland).
- The Water Fittings Regulations or Water Byelaws in Scotland.
- The Current I.E.E. Wiring Regulations.

Where no specific instructions are given, reference should be made to the relevant British Standard Code of Practice.

In IE, the installation must be carried out by a competent Person and installed in accordance with the current edition of I.S. 813 'Domestic Gas Installations', the current Building Regulations and reference should be made to the current ETCI rules for electrical installation.

These Instructions must be read in conjunction with those for the Boiler Section before installing or using this appliance.

NOTE: All illustrations show the Inset 3 TS Super. The procedure for Installation, Commissioning, Servicing etc. is the same for all Bermuda Inset 3 Super models.

Notice

Discolouration of wall surfaces

Most heating appliances generate warm air convection currents and transfer heat to any wall surface against which they are situated.

Some soft furnishings (such as blown vinyl wallpapers) may not be suitable for use where they are subject to temperatures above normal room levels and the manufacturer's advice should be sought before using this type of wall covering adjacent to any heating appliance.

The likelihood of wall staining from convected air currents will be increased in environments where high levels of cigarette smoke or other contaminants exist.

2.0 Technical Data

Bermuda Inset 3 TS, BS, FS, KS Super
Bermuda Inset 3 BB, CB, SC, BC Super

The fire is set for Gas Type G20 at 20mbar.

Heat Input (Gross)	High	Low
kW	6.52	4.1
Btu/h	22,246	13,989
Pilot Assembly	9416	
Heat Input (Gross)	210W (715 Btu/h)	
Injector	F15	
Setting Pressure	Cold	
mbar	9.0	
in wg	3.6	
Thermocouple Output	6.5 - 10.0 mv	
Gas Connection	The gas supply is provided from the service cock on the boiler unit	
Electrical Supply	230V ~ 50Hz 65W Supplied from boiler electrical socket. Fused 5A in boiler external supply.	
Controls	Automatic control system with flame failure and atmospheric sensing device.	
Gas Rate (after 10 mins)	0.60 m^3/h (21.0 ft^3/h)	
Installation Lifting Weight	10.3 kg (22.7 lbs)	
Outercase Dimensions	Height	610mm
	Width	593mm
	Depth (from the wall)	103mm

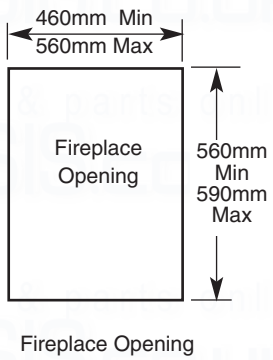

Fig. 2

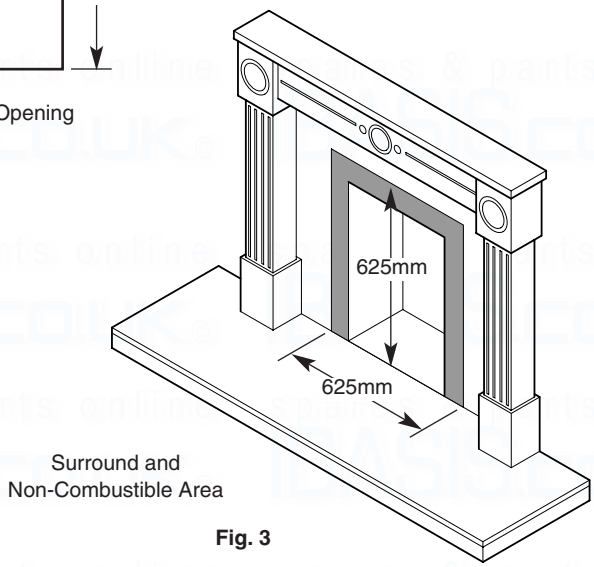

Fig. 3

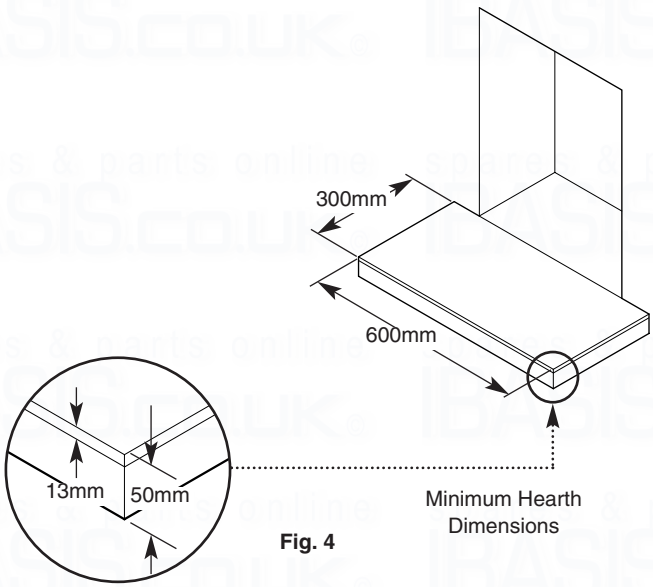

Fig. 4

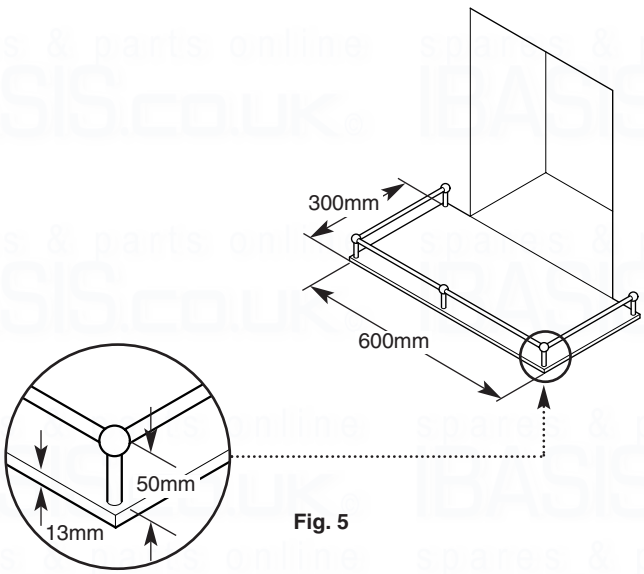

Fig. 5

3.0 Site Requirements

3.1 Fireplace Opening

1. The principal site requirements are determined by the boiler unit, but the following details are essential for the correct installation of the fire unit:

Fireplace Opening (Fig. 2):

Height:	560mm (22in) min
	590mm ($23^{15}/_{64}$in) max
Width:	460mm (18in) min
	560mm (22in) max

NOTE: The wall or surround behind the fire must be non-combustible.

Non-Combustible area (Fig. 3):

Height	625mm ($24^{19}/_{32}$in)
Width	625mm ($24^{19}/_{32}$in)

2. Any gaps between the wall and the surround must be sealed. A shelf, not projecting more than 178mm (7in), may be fitted at least 126mm (5in) above fire or 180mm ($7^{1}/_{8}$in) for 229mm (9in) deep shelf.

3.2 Hearth Mounting

1. The fire unit is intended to be hearth mounted. The hearth must be of a non-combustible material at least 13mm ($^{1}/_{2}$in) thick and measuring at least 300mm (12in) deep by 600mm ($23^{5}/_{8}$in) wide and fitted centrally about the fireplace opening. The top surface of the hearth should be a minimum of 50mm (2in) above floor level and must be level with the base of the builders opening (Fig. 4).

2. **On no account should the fire unit be fitted directly onto a combustible floor or carpet.**

3. Alternatively, a fender rail or upstanding edge of 50mm (2in) height can be fitted to the periphery of the 13mm ($^{1}/_{2}$in) non-combustible hearth (Fig. 5).

NOTE: If the firefront must be wall mounted, it is still necessary to fit a hearth of the dimensions shown.

3.0 Site Requirements

3.3 Ventilation

1. Ventilation air supply should be in accordance with the relevant standards. In GB this is BS 5440 Pt 2. In IE this is the current edition of I.S. 813 “Domestic Gas Installations”.
The permanent ventilation area size requirements are as shown:

80.1cm² **12.42in²**

2. The permanent vent may be directly into the room containing the appliance. The vent may also be sited in another (not a bedroom, toilet, bathroom or kitchen) room provided an interconnecting vent is used.

3. The vent must not be installed inside the builders opening. The vent should be sited following good practice for a habitable room.

4. We recommend the use of the Stadium BM720 “Black Hole” ventilator which is available from your local merchant.

3.4 Gas Supply

1. The gas installation should be in accordance with the relevant standards. In GB this is BS 6891. In IE this is the current edition of I.S. 813 “Domestic Gas Installations”.

2.The gas supply to the fire is provided from the service cock on the boiler using the supply pipe provided in the fire kit. The pipe is the correct length and will not need shortening.

4.0 Electrical

4.1 Electrical Supply

1. Electricity is supplied to the fire unit via the plug and cable assembly provided with the fire.

2. The cable must be connected to the 4 pin plug and socket on the boiler.

NOTE: The method of connection to the electrical supply must facilitate complete electrical isolation of the appliance. Connection may be made via a fused double pole isolator with a contact separation of at least 3mm on all poles and serve the appliance and system controls only.

Wiring Key

b - Blue
br - Brown

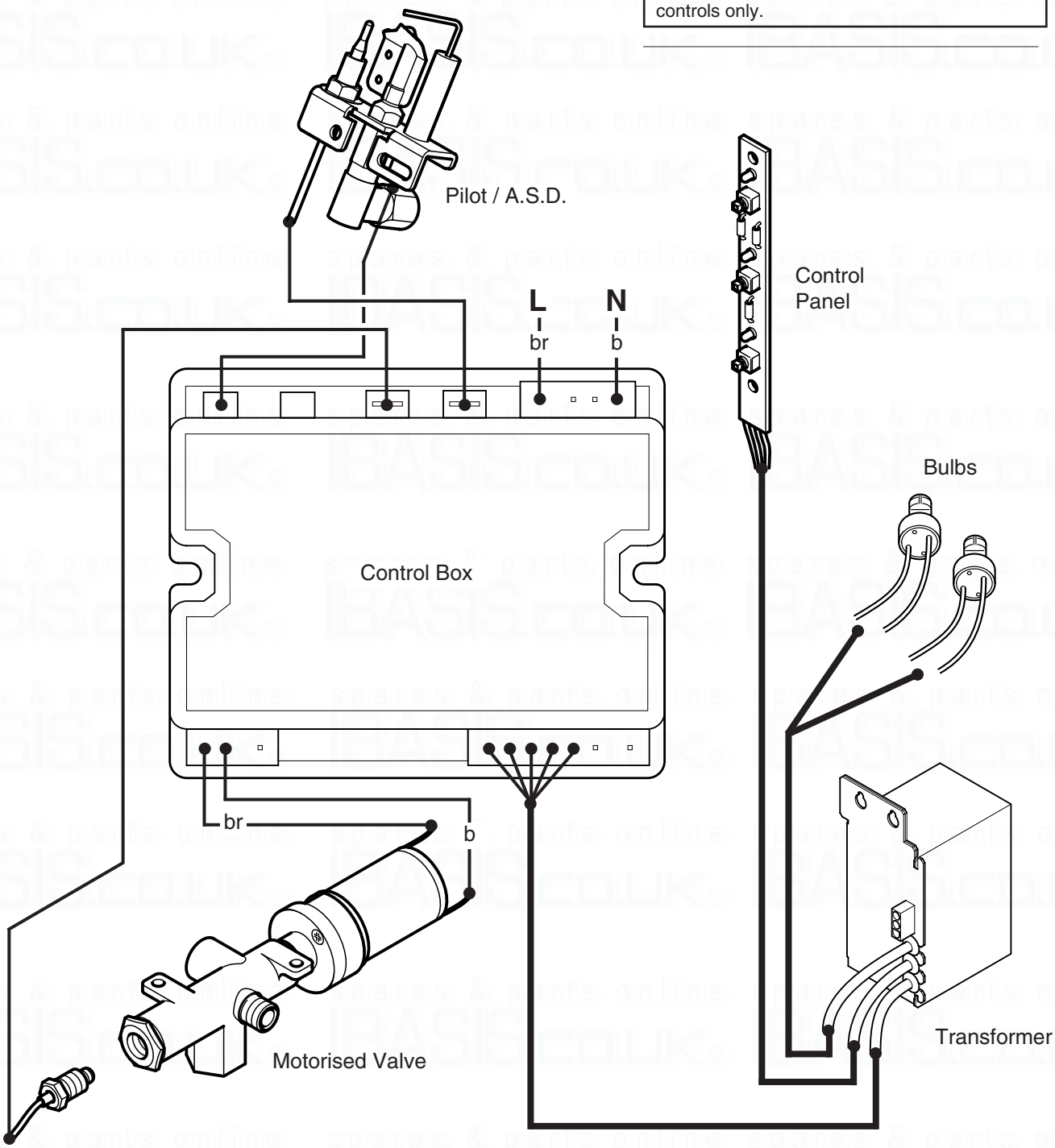

WARNING: The appliance must be earthed. The input cable for the appliance should be 0.75mm² to IEC Code 27 (heat resistant).

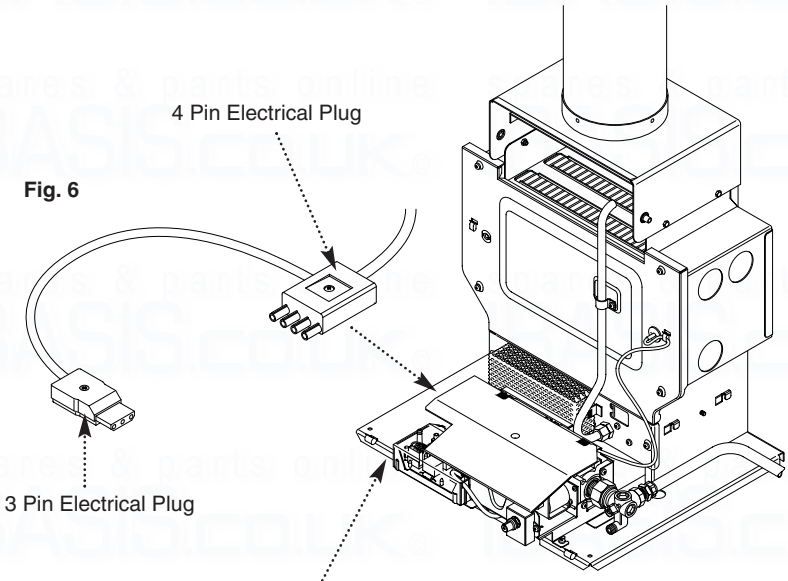

Fig. 6

Fig. 7

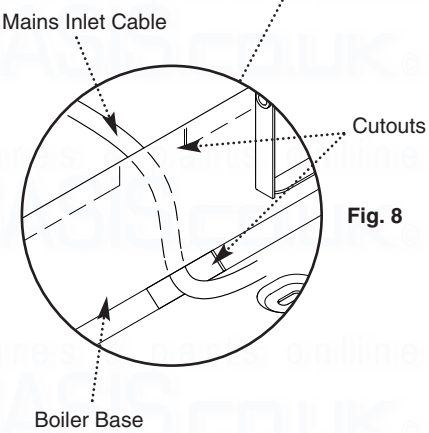

Fig. 8

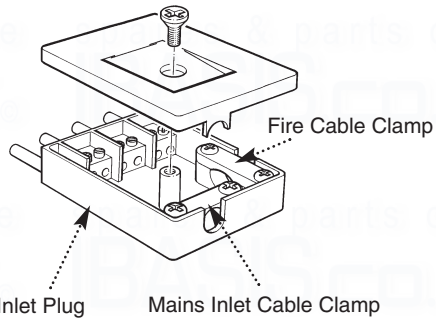

Fig. 9

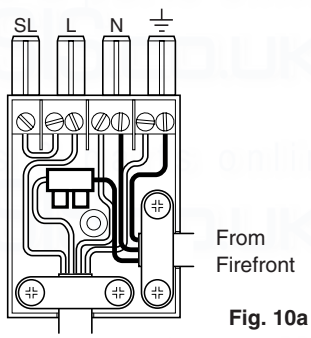

Fig. 10a

From Control System
& Permanent Live

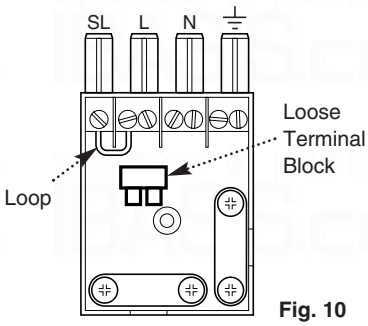

Fig. 10

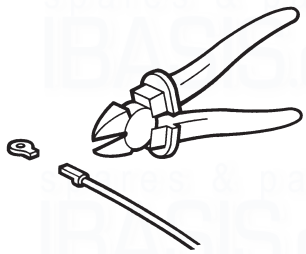

Cut the end of the earth tag from
the fire supply cable earth wire.

5.0 Installation

5.1 Initial Preparation

1. Unpack the fire unit from the carton. The coal bed and fender assemblies are packed in individual boxes within the main carton and should be left in these until required.

2. Remove the instructions and other literature from the combustion box together with the contents kit and glass pack.

5.2 Electrical Connection

External wiring must be correctly earthed, polarised and in accordance with relevant Regulations/Rules. In GB this is the current I.E.E. Wiring Regulations. In IE reference should be made to the current edition of the ETCI rules. The appliance requires an electrical supply from the heating controls system. **A permanent live is required to supply the firefront.**

WARNING: The appliance must be earthed. The input cable for the appliance should be 0.75mm² to IEC Code 227 (heat resistant). The system external controls and the appliance must be supplied by the same isolator.

5.3 Making the Electrical Connection
(50/4 E model)

1. Take the 3 pin plug and lead assembly from the gas fire contents kit (Fig. 6).

2. Remove the 4 pin electrical plug from the boiler (Figs. 6 & 7), remove the cover from the 4 pin plug and undo the cable clamps (Fig. 9).

3. Route the mains inlet cable under the boiler base through the cutouts (Fig. 8).

IMPORTANT: The mains inlet cable MUST be routed under the boiler base to ensure that it cannot interfere with the transformer box on the fire front.

4. The boiler plug is supplied as shown; A loop connects the live and switched live terminals. Also included is a loose terminal block (Fig. 10).

5. If the firefront being installed is equipped with either lighting effects or lighting effects and electronic ignition the plug must be wired as Fig. 10a.

Connect the control switched live to position L. Connect neutral to N and earth to ⏚ . Connect the permanent live to the loose terminal block supplied in the plug.

The live of the fire supply cable must also be connected to the terminal block.

Neutral and earth of the fire supply can then be connected to N and ⏚ respectively.

6. Re-fit the cable clamps ensuring that the outer insulation is securely held and re-fit the plug cover. **Ensure that all cables are routed away from the boiler casing and hood.**

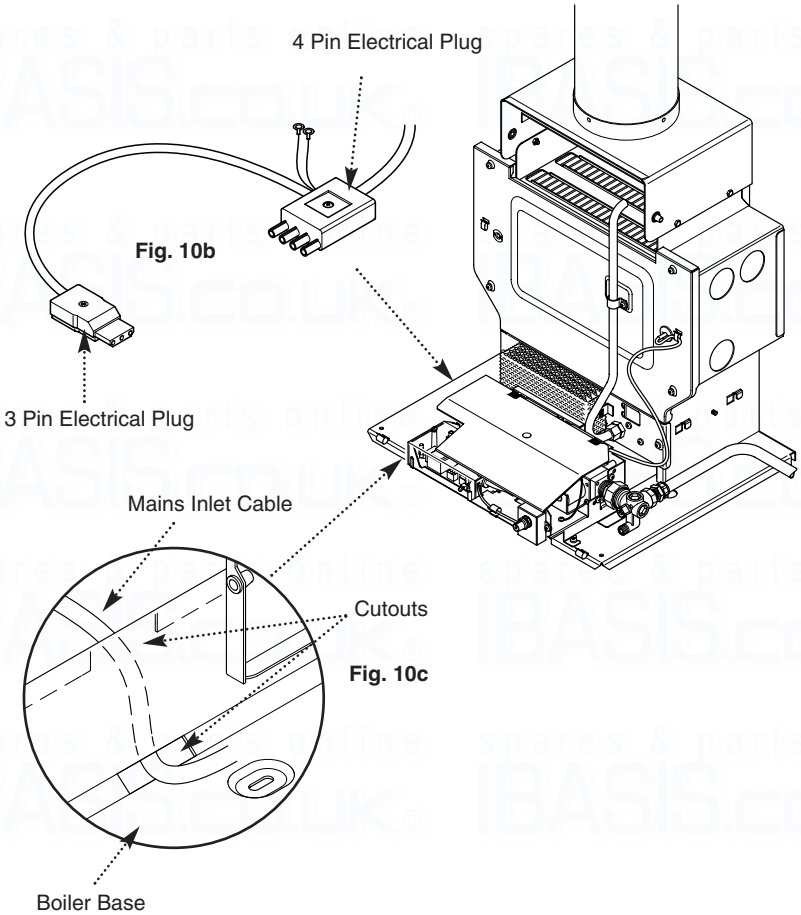

5.3 Making the Electrical Connection (continued) (50/5 model)

1. Take the 3 pin plug and lead assembly from the gas fire contents kit.

2. Remove the 4 pin electrical plug from the boiler (Figs.10b), remove the cover from the 4 pin plug and undo the cable clamps (Fig. 10d).

3. Route the mains inlet cable under the boiler base through the cutouts (Fig. 10c).

IMPORTANT: The mains inlet cable must be routed under the boiler base to ensure that it cannot interfere with the transformer box on the fire front.

4. The boiler plug is supplied as shown; An earth lead connects to the boiler chassis (Fig. 10e).

5. Wire the plug as Fig. 10f.

Connect the control switched live to SL.

Connect neutral to N and earth to ⏚.

Connect the permanent live to L.

The fire earth must connect to the chassis.

Neutral and live of the fire supply cable can then be connected to N and L respectively.

6. Re-fit the cable clamps ensuring that the outer insulation is securely held and re-fit the plug cover. **Ensure that all cables are routed away from the boiler casing and hood.**

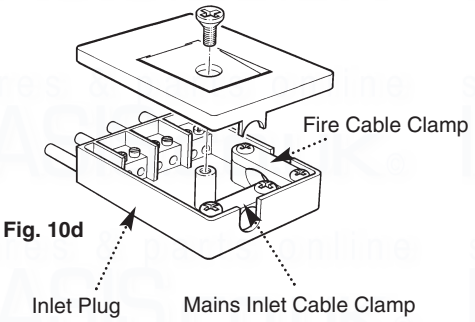

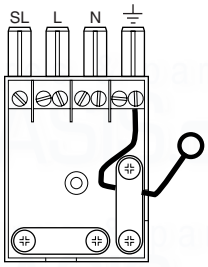

Fig. 10e

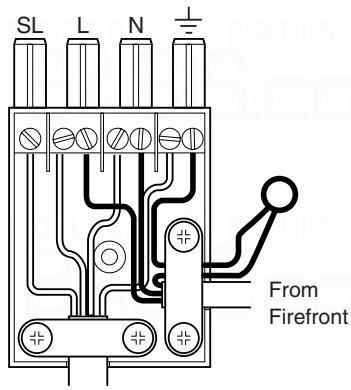

Fig. 10f

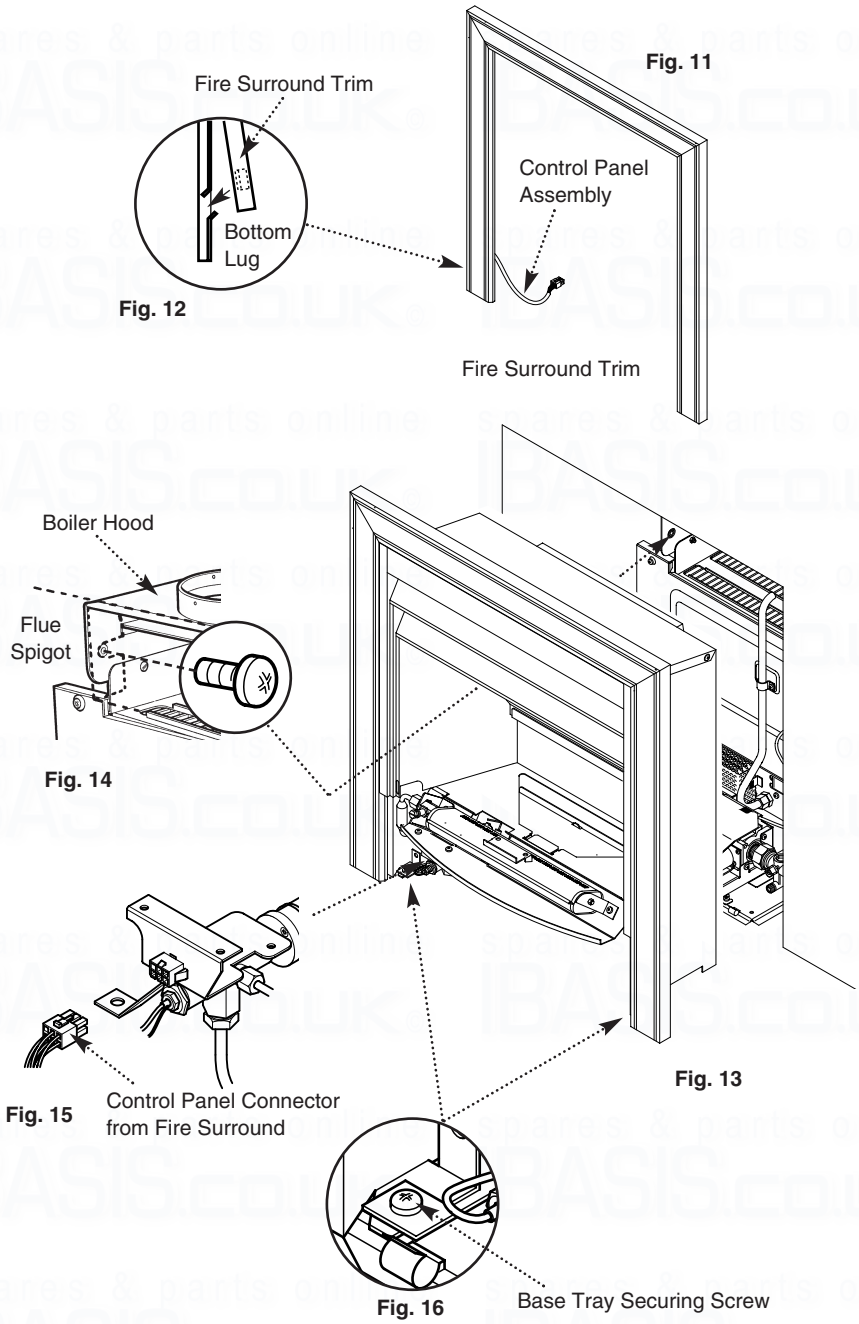

5.4 Fitting the Fire

1. Remove the fire surround trim from its poly bag (Fig. 11). The fire surround should be handled with care.

2. Position the fire surround trim around the fire combustion box and lower it into position, taking care not to trap the cable from the control panel assembly, ensure that the top lugs locate on to the top of the fire combustion box and the bottom lugs locate into the slots in the sides of the combustion box (Fig. 12).

3. Insert the plug connector from the control panel assembly into the socket on the front of the valve bracket (Fig. 15).

4. Position the fire on to the boiler base and slide back, ensuring that the flue spigot locates into the downdraught diverter on the boiler. Push the fire back into the opening. Look through the fire to align the two slots in the flue spigot with the holes in the boiler hood (Figs. 13 & 14).

5. Fit and tighten the two screws that secure the fire combustion box to the front corners of the boiler base tray (Figs. 13 & 16).

6. Fit the two screws inside the fire flue spigot. Push the fire back and tighten the two screws. (Fig. 14).

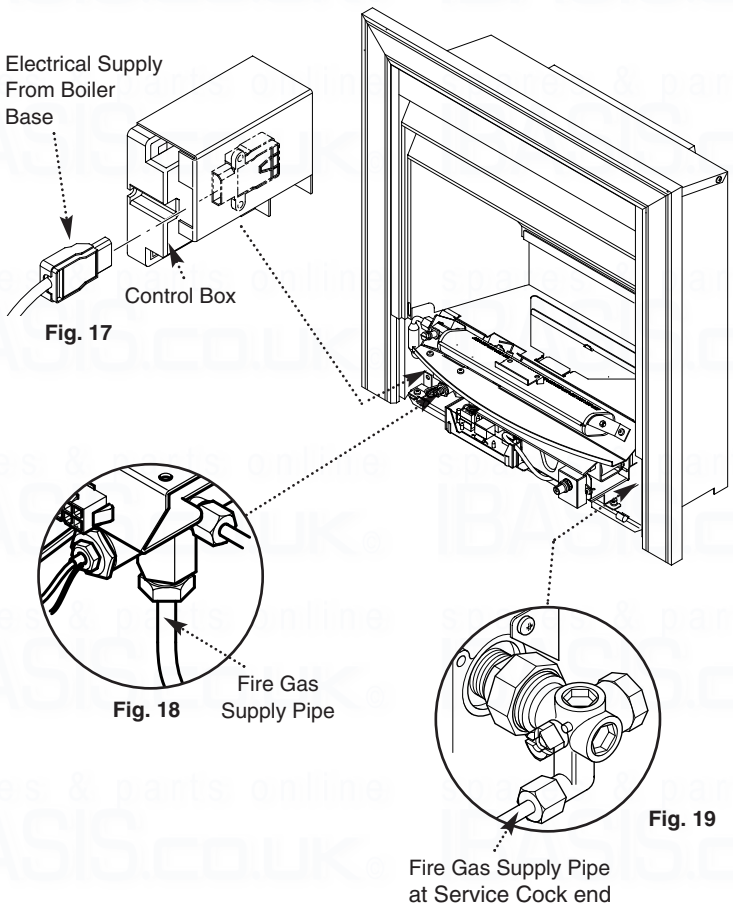

Fig. 17

Fig. 18

Fig. 19

5.4 Fitting the Fire (continued)

7. Fit the fire gas supply pipe at the motorised valve inlet (Fig. 18).

8. Fit the fire gas supply pipe to the gas service cock on the right hand side of the boiler base ensuring gas soundness is done at both connections on the gas supply pipe (Fig. 19).

9. Connect the electrical supply to the fire from the boiler (Fig. 17).

10. Unpack the glass and fit two of the amber pieces vertically between the tabs at the rear, and the remaining one between the two bulbs at the front (Fig. 20).

11. Lay the glass retaining assembly into the opening in the fire box, locating the slot over the central back tab (Fig. 21).

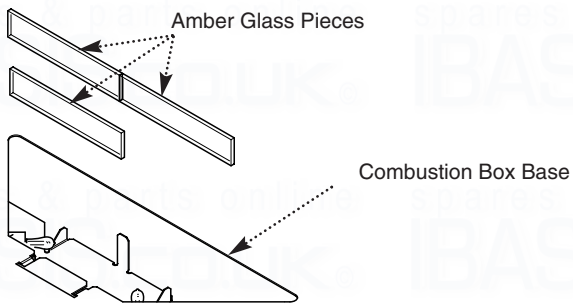

Fig. 20

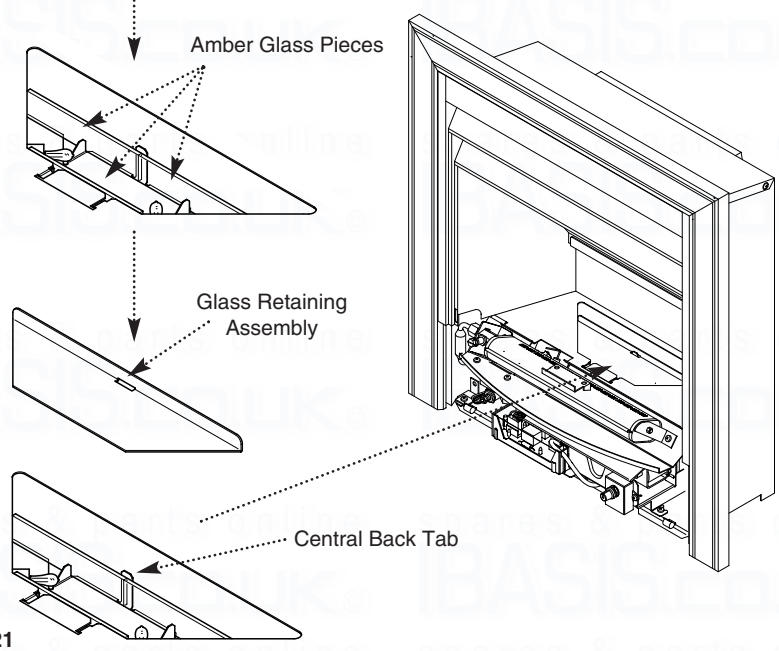

Fig. 21

6.0 Commissioning the Fire

6.1 Commissioning the Fire

1. Turn on the main gas and electrical supply and press the button (Fig. 24) to check that the illumination effect operates.

2. Turn the gas service cock to the fire and boiler on position as shown, then purge according to in GB BS 6891 and in IE the current edition of I.S. 813 “Domestic Gas Installations”. (Fig. 23).

3. Check for gas soundness from the gas service cock to the fire inlet connection.

4. Release the pressure test point sealing screw from the injector adaptor and connect a pressure gauge (Fig. 22).

5. The fire has three settings:-

OFF LOW HIGH

6. The ON button has a safety feature built in. It should be pressed and held for 3-4 seconds. (The green power ON indicator comes on when the ON/OFF button is pressed (Fig. 24).)

7. During the ignition sequence you will hear an audible signal. This lasts for up to 20 seconds. The fire will then automatically ignite on the low setting.

NOTE: If the ON/OFF button is pressed and held for less than 3 seconds the fire will not ignite. This is a built in safety feature.

8. If the fire fails to ignite or goes out at any time, switch the fire off by pressing the ON/OFF button once and repeat the procedure (Fig. 24).

9. Turn the fire to high setting by pressing the HIGH/LOW button. The green high setting indicator will come on to confirm this (Fig. 24). This operation can be undertaken during the ignition sequence.

10. Check the fire gas pressure.
The pressure should be 9.0 mbar (3.6 in wg). If the pressure is not correct, check that all gas cocks are fully open and that the meter pressure is correct. No adjustment to the setting pressure is possible.

11. Pressing the ON/OFF button once will turn the fire off. The green power ON indicator will go out to confirm this (Fig. 24). Disconnect the pressure gauge and replace the pressure test point sealing screw, ensuring a gas tight seal (Fig. 22).

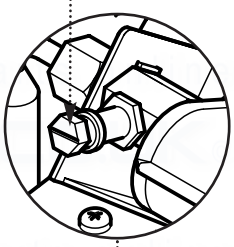

Fig. 22

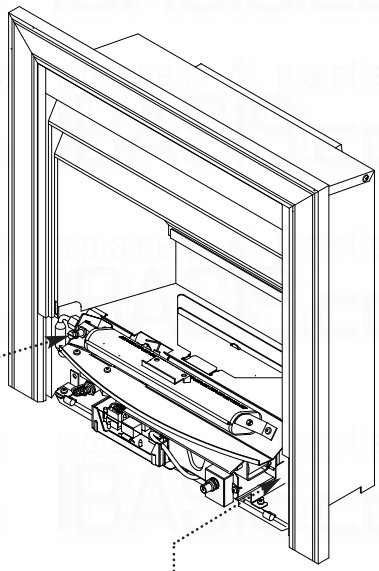

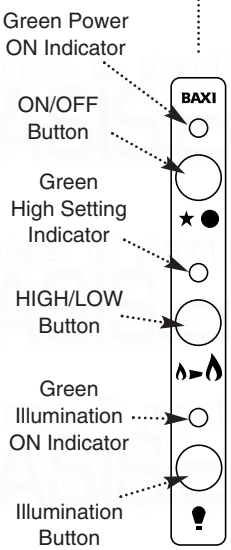

Controls & Bezel

Fig. 24

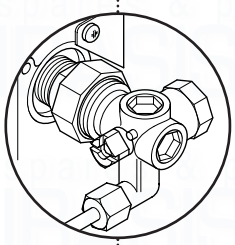

Gas Service Cock

Fig. 23

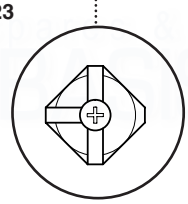

Fire and Boiler
ON Position

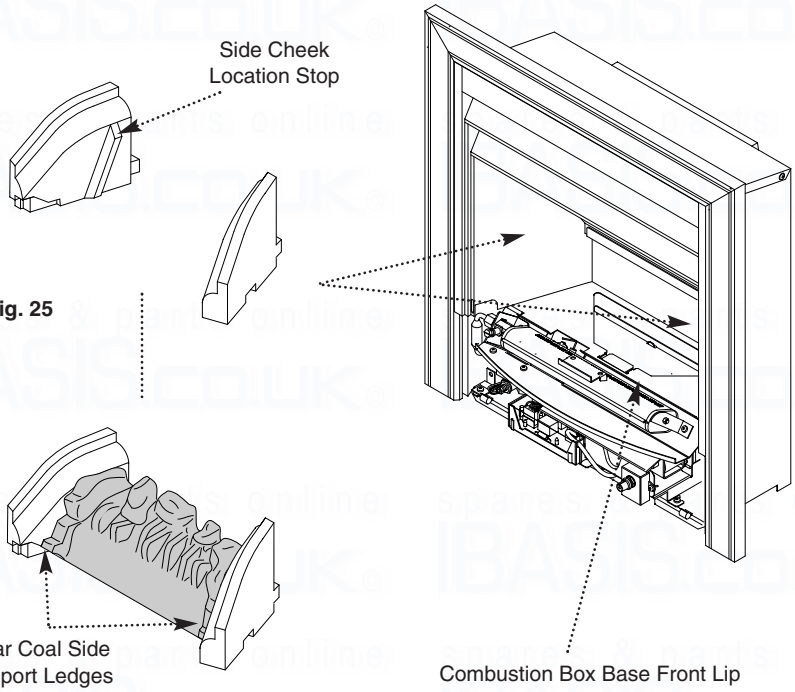

Fig. 25

Fig. 26

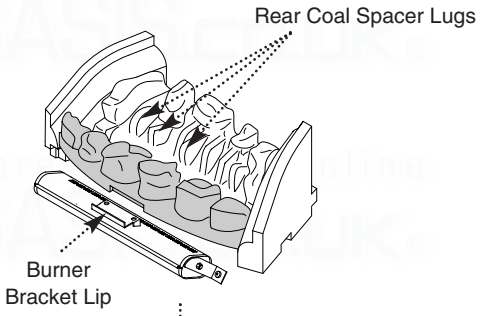

Fig. 27

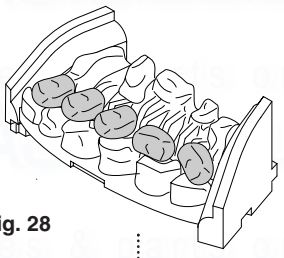

Fig. 28

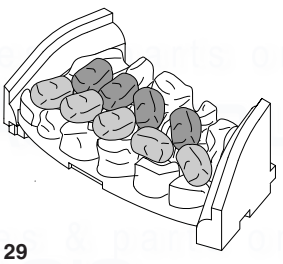

Fig. 29

7.0 Arranging the Coals

7.1 Arranging the Coals

It is important that all the coals are used and arranged as shown in order to achieve the desired flame picture.

1. Remove the loose coals, side cheeks, rear and front coals from their protective packaging and place them on a newspaper or similar to prevent soiling furnishings.

CAUTION: The coals are extremely fragile and must be handled accordingly. Gloves should be worn and any inhalation of the dust should be avoided. Keep the coals away from children at all times. Never use coals other than those originally supplied or Genuine Baxi Spare Parts. Never put additional coals on the fire. Please read section 1.3 Important Information.

2. Place the right / left hand side cheeks against the combustion box side walls (Fig. 25).

3. Locate the rear coal behind the combustion box base front lip and angle it back against the side cheek location stops (Figs. 25 & 26).

4. Locate the front coal onto the rear coal side support ledges and behind the lip of the burner bracket (Figs. 26 & 27).

5. Place 5 of the loose coals into the location recesses of the front coal, (flat face downward). The 3 centre coals should rest against the corresponding rear coal spacer lugs. Orientation of the coals should be as shown in order to achieve the desired flame picture (Fig. 28).

6. Place the remaining 4 loose coals between the front loose coals and the rear coal, (flat face downward). Orientation of the coals should be as shown in order to achieve the desired flame picture (Fig. 29).

7.0 Arranging the Coals

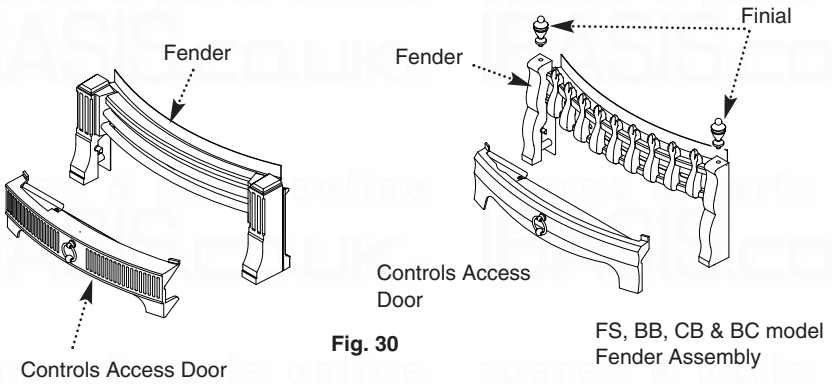

Fig. 30

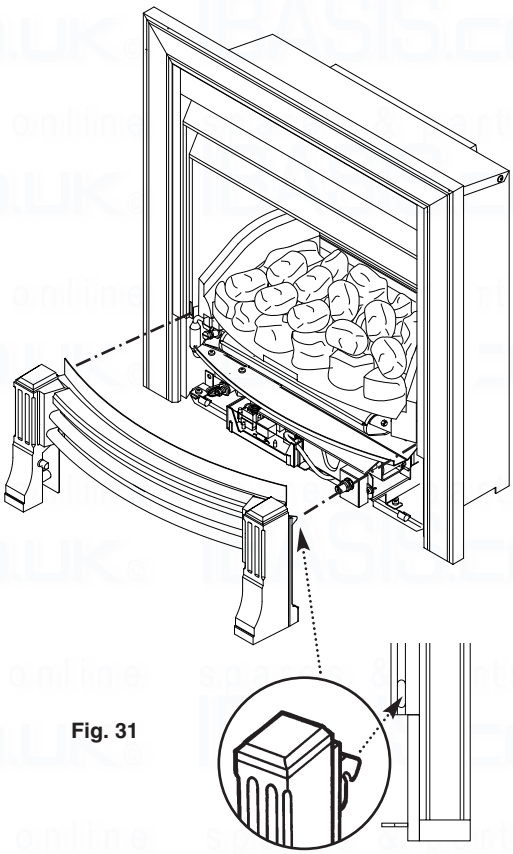

Fig. 31

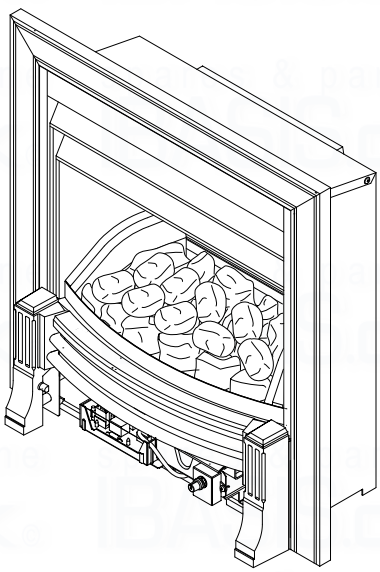

7.1 Arranging the Coals (cont)

7. At this point it is necessary to fit the fender assembly.

8. Remove the fender from its packing (Fig. 30) (on FS, BB, CB, BC models screw the finials to the fender assembly).

9. Remove the controls access door from the fender assembly (Fig. 30).

10. Hook the fender into the sides of the combustion box (Fig. 31).

11. The appliance must now be checked for spillage.

8.0 Checking for Spillage

8.1 Checking for Spillage

CAUTION - Whilst checking for spillage care must be taken to avoid touching hot panels.

1. Before checking for spillage the worst likely operating environment for the appliance must be created. To do this, close all doors and windows in the room and operate any ceiling or extractor fans that may be present, on the wall or within other appliances. If any ceiling or extractor fans are present in an adjoining room then these should be operated and the connecting door left open.

2. There are two stages of appliance operation for which spillage must be checked by following "The Spillage Checking Procedure" shown below (8.2).

3. **STAGE 1** - Commencing with the appliance Cold, operate the fire on maximum for five minutes and check for spillage. If spillage is evident then the fire is operated for a further 10 minutes and re-checked. If spillage is still evident then the cause should be ascertained and rectified before continuing with commissioning.

4. **STAGE 2** - Following a satisfactory result at stage 1, the fire is left on and the boiler is operated (from Cold) for 5 minutes before checking for spillage again. If spillage is evident then the cause should be ascertained and rectified before continuing with commissioning.

5. If the appliance cannot be commissioned then it should be isolated until the problem is resolved.

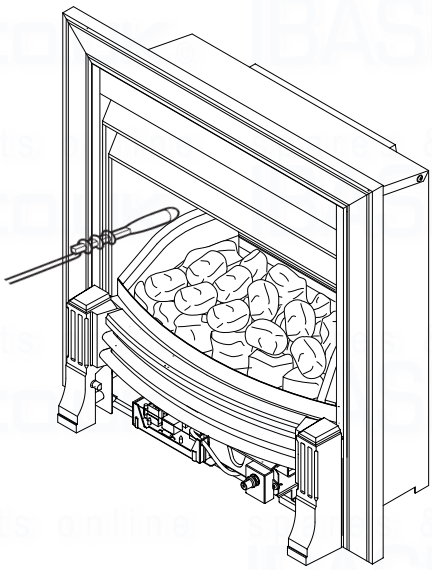

Fig. 32

8.2 The Spillage Checking Procedure (Figs. 32 & 33)

1. A lighted smoke match should be held in a suitable holder 50mm below the lower louvre of the fire and 50mm from either side of the combustion box inner side panel. The majority of smoke should be drawn into the fire.

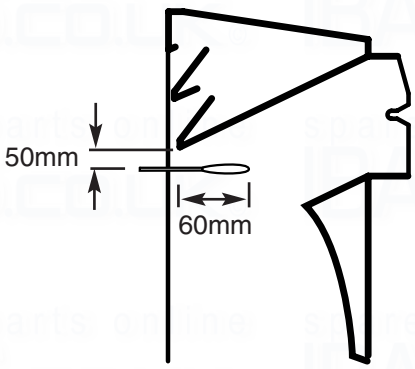

Fig. 33

8.3 Possible Causes of Spillage

1. The smoke match may have been positioned incorrectly, resulting in the smoke being picked up by hot convected air currents.

2. The builders opening or flue installation may be unsound.

3. Inadequate ventilation.

4. Down draughts may be present.

5. Flue blockages.

8.0 Checking for Spillage

8.4 Completion

1. Take the black painted extension piece, captive nut and screw from the fire contents kit.

2. Fit the captive nut to the rear edge of the door shield, over the hole (Fig. 34).

3. Slide the extension piece between the door shield and the casting, ensuring the location hole locates over the pip on the door shield (Fig. 36).

4. Secure the extension piece to the door shield using the black screw (Fig. 37).

5. Replace the controls access door (Fig. 35).

6. These instructions and the users instructions should be handed to the customer. At the same time the customer should be shown how to operate the fire and boiler safely and efficiently.

7. The need for annual servicing should be emphasised and the returning of the guarantee card advised.

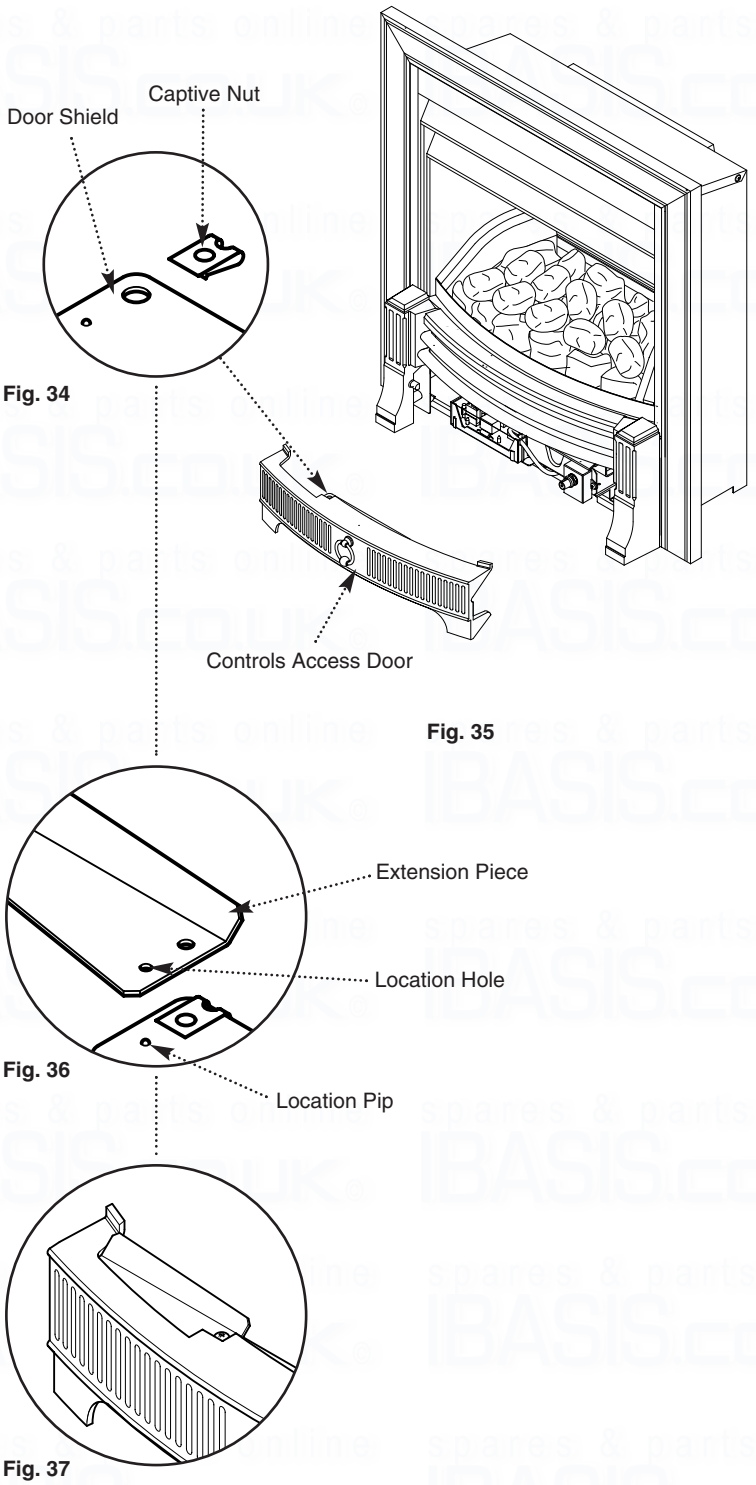

Fig. 34

Fig. 35

Fig. 36

Fig. 37

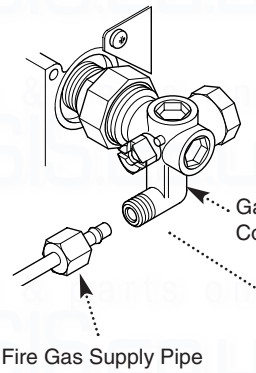

Fig. 39

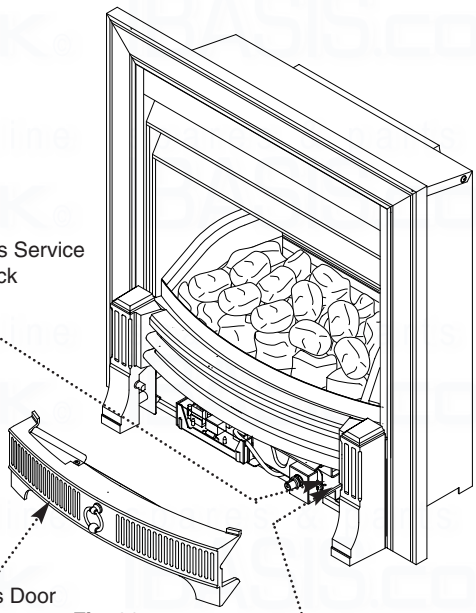

Fig. 38

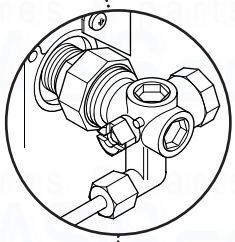

Fig. 40

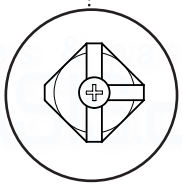

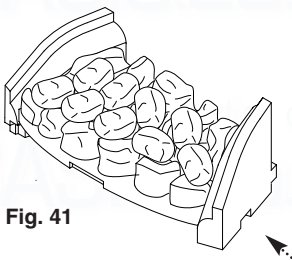

Fig. 41

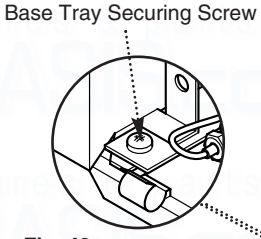

Fig. 42

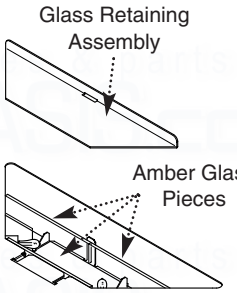

Fig. 43

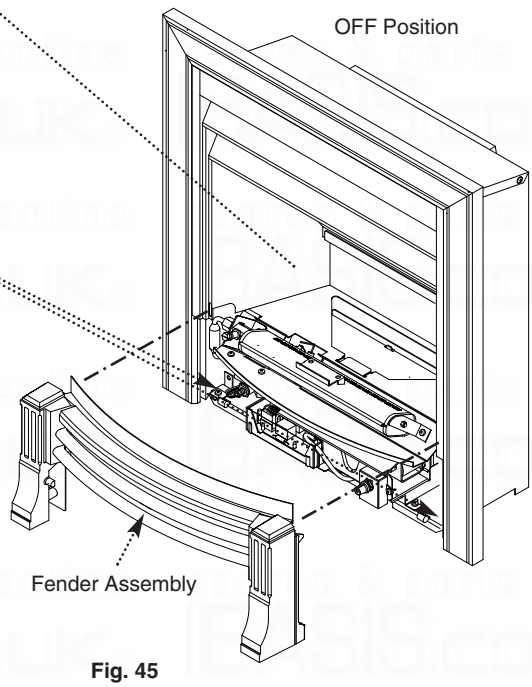

Fig. 45

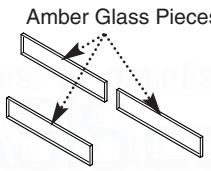

Fig. 44

9.0 Annual Servicing

9.1 Annual Servicing

IMPORTANT: It is possible that some soot may be deposited on the coals after use. This is acceptable providing it is not allowed to accumulate.

CAUTION: The coals are extremely fragile and must be handled accordingly. Gloves should be worn and any inhalation of the dust should be avoided. Keep the coals away from children at all times. Never use coals other than those originally supplied or Genuine Baxi Spare Parts. Never put additional coals on the fire. Please read section 1.3 Important Information.

1. For reasons of safety and economy it is important to service the fire and boiler annually.

9.2 Preparation

WARNING: Isolate the gas and electricity supplies to the boiler and fire unit before servicing.

1. In order to service the boiler unit, the fire must be disconnected and removed. Remove the fire as follows-

2. Lift the controls access door away from the fender assembly (Fig. 38).

3. Turn off the gas supply at the service cock (Fig. 40).

4. Carefully remove all the loose coals, side cheeks, rear and front coals (Fig. 41).

5. Remove the glass retaining assembly (Fig. 43).

6. Carefully remove the three amber glass pieces (Fig. 44).

7. Lift the fender assembly to disengage it from the hooks and remove it (Fig. 45).

8. Disconnect the gas supply to the fire at the gas service cock connection (Fig. 39).

9. Remove the two screws retaining the sides of the fire combustion box to the fire base tray (Fig. 42).

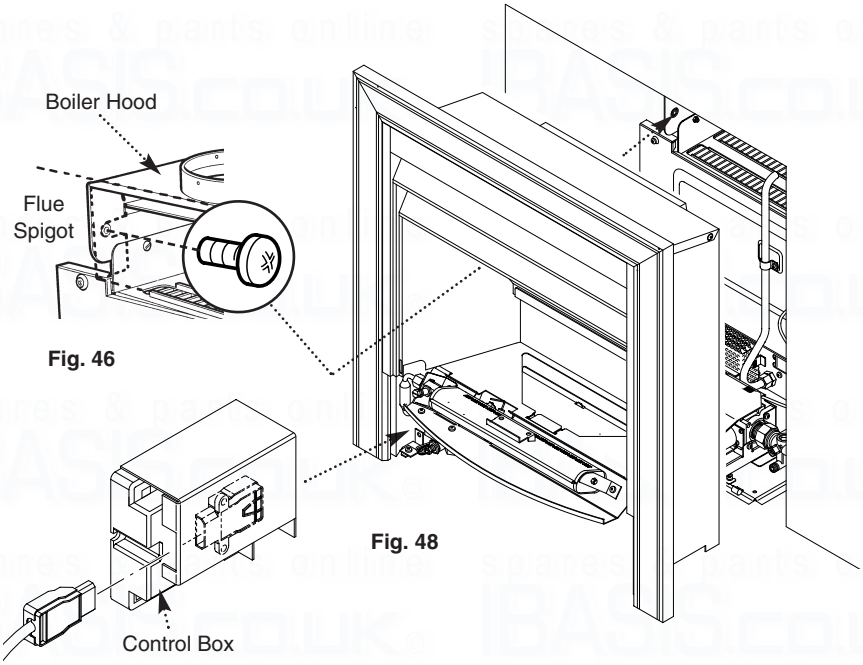

Fig. 46

Fig. 47

Fig. 48

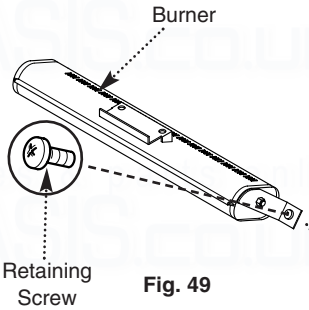

Fig. 49

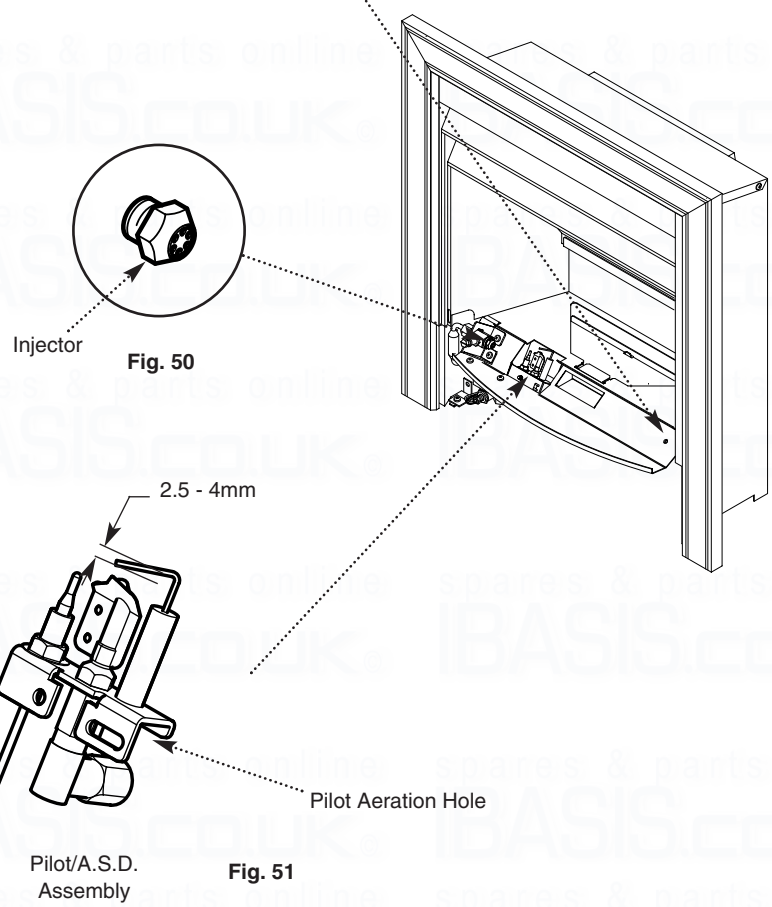

Fig. 50

Fig. 51

9.2 Preparation (Cont)

8. Slacken the two screws inside the flue spigot (Fig. 46).

9. Disconnect the electrical plug from the socket attached to the control box (Fig. 47).

10. Slide the fire combustion box forward to disengage it from the flue spigot and lift away (Fig. 48) taking care not to snag any electrical wiring.

9.3 Cleaning the Burner & Injectors

1. Undo the screw holding the burner to the controls mounting plate, and disengage the burner inlet from the injector (Fig. 49).

2. Using a soft brush, remove any dirt from the burner and ensure that the ports are free from obstruction (Fig. 49).

3. Using a spanner on both the adaptor barrel and fire injector, remove the injector from the barrel (Fig. 50).

4. Examine and clean the injector. Do not use any hard tools such as pins or wire. Refit the injector (Fig. 50).

9.4 Cleaning the Pilot/A.S.D. Assembly (Fig. 51)

NOTE: No attempt should be made to clean the device using any hard tools, including pins or wire.
WARNING: The pilot/A.S.D. assembly must not be adjusted in any way.

1. The A.S.D. must not be altered so that it will not operate or be bypassed in any way.

2. Ensure that the pilot burner aeration hole is free from lint, debris etc.

3. If necessary clean the electrode and target, and check that the spark gap is 2.5 - 4.0mm.

4. The thermocouple cannot be changed as an individual component. The complete assembly must be replaced in the event of one or other component failure(s).

5. Only use a Genuine Baxi Spare Part.

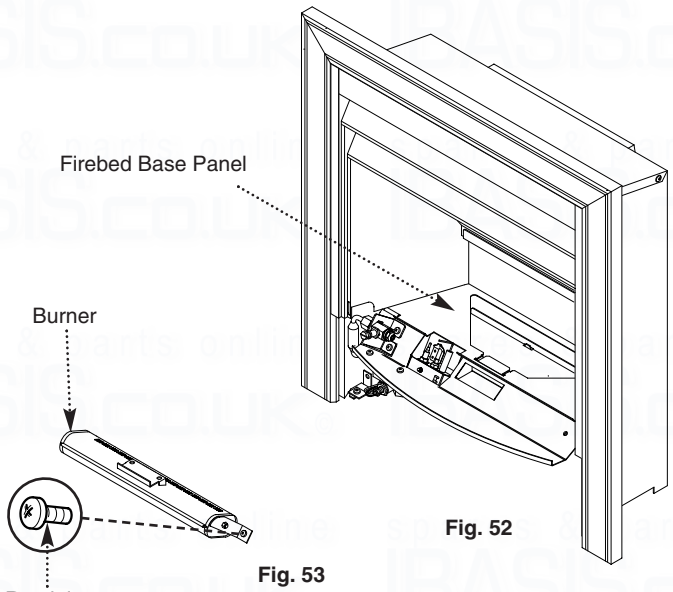

Fig. 52

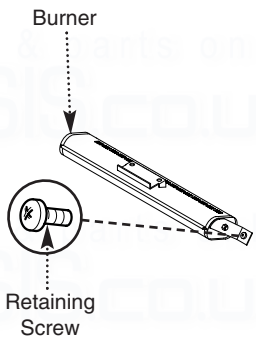

Fig. 53

9.5 Cleaning the Combustion Box & Coals

1. Remove any deposits from the firebed base panel (Fig. 52).

2. If necessary the coals can be cleaned with a very soft brush, and can be retouched using the black stain available direct from Baxi or from your local Baxi Spares Stockist. Quote Part N° 043224 when ordering.

3. Refit the burner to the controls mounting plate (Fig. 53).

9.6 Replacing the Fire

1. Once the boiler has been serviced, the fire can be replaced. Refer to the boiler installation and servicing instructions.

2. Slide the fire combustion box into position ensuring that the flue spigot fits into the boiler downdraught diverter. Fit and tighten the two screws inside the flue spigot (Fig. 54) and replace the two screws into the boiler base tray (Fig. 56).

3. Reconnect the gas supply and test for soundness (Fig. 57).

4. Reconnect electrical supply (Fig. 55).

5. Replace all the loose coals, side cheeks, rear and front coals as described in “Arranging the Coals”. Refit the fender assembly.

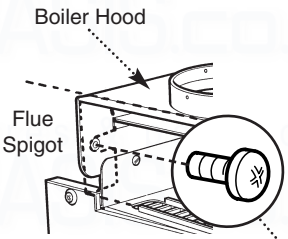

Fig. 54

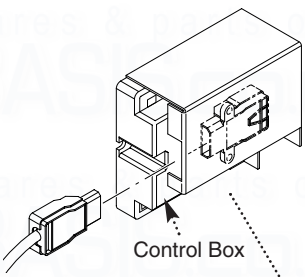

Fig. 55

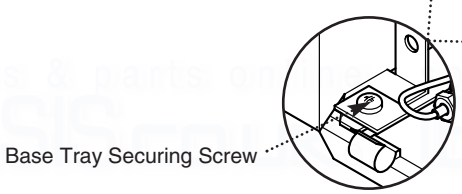

Fig. 56

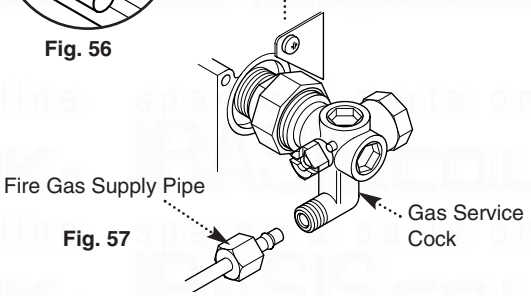

Fig. 57

10.0 Changing Components

10.1 Changing Components

WARNING: Isolate the gas and electricity supplies to the boiler and fire unit before changing any components.

1. Lift the controls access door away from the fender assembly (Fig. 59).

2. Turn off the gas supply at the service cock (Fig. 60).

3. Carefully remove all the loose coals, side cheeks, rear and front coals (Fig. 58).

CAUTION: The coals are extremely fragile and must be handled accordingly. Gloves should be worn and any inhalation of the dust should be avoided. Keep the coals away from children at all times. Never use coals other than those originally supplied or Genuine Baxi Spare Parts. Never put additional coals on the fire. Please read section 1.3 Important Information.

4. Remove the glass retaining assembly (Fig. 62). At this point the bulb/s may be changed (see Section 10.7).

5. Carefully remove the three amber glass pieces (Fig. 63).

6. Lift the fender assembly to disengage the hooks and remove it (Fig. 59).

7. **At this point the burner and injector may be changed.**

8. Disconnect the gas supply to the fire at the gas service cock connection (Fig. 61).

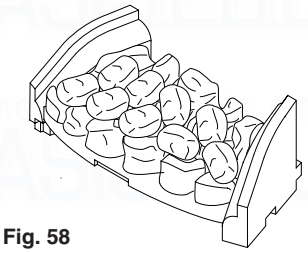

Fig. 58

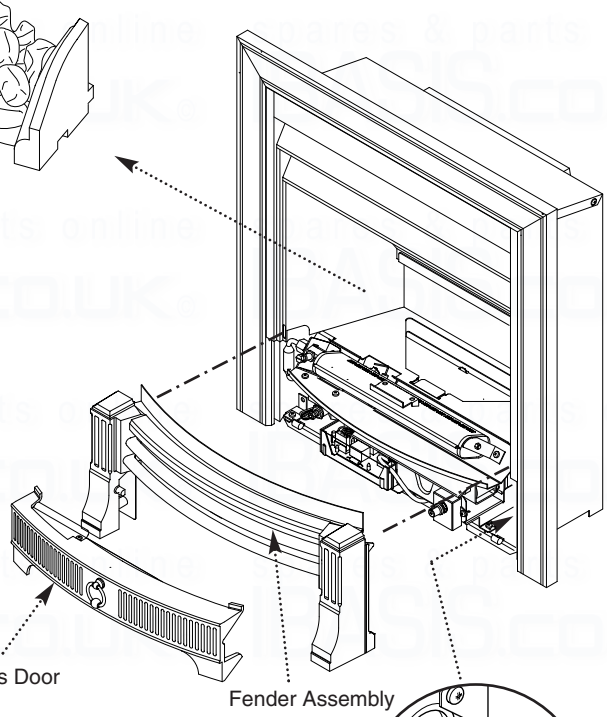

Fig. 59

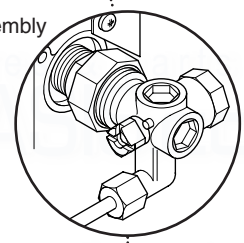

Fig. 60

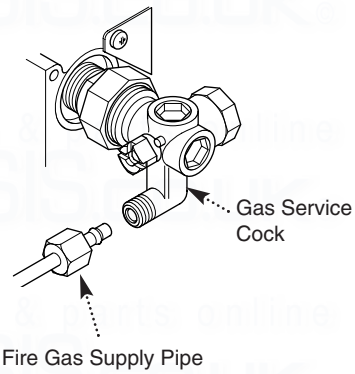

Fig. 61

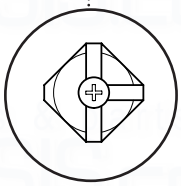

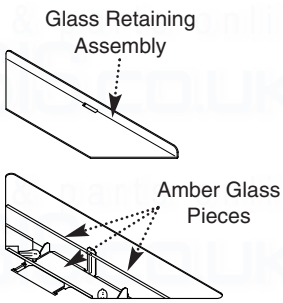

Fig. 62

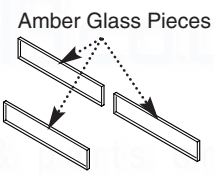

Fig. 63

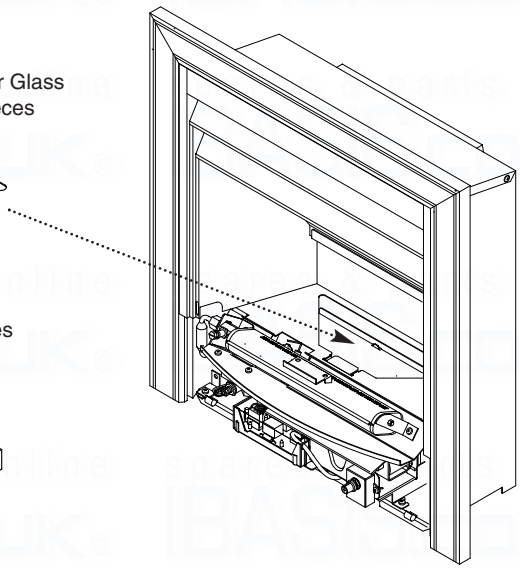

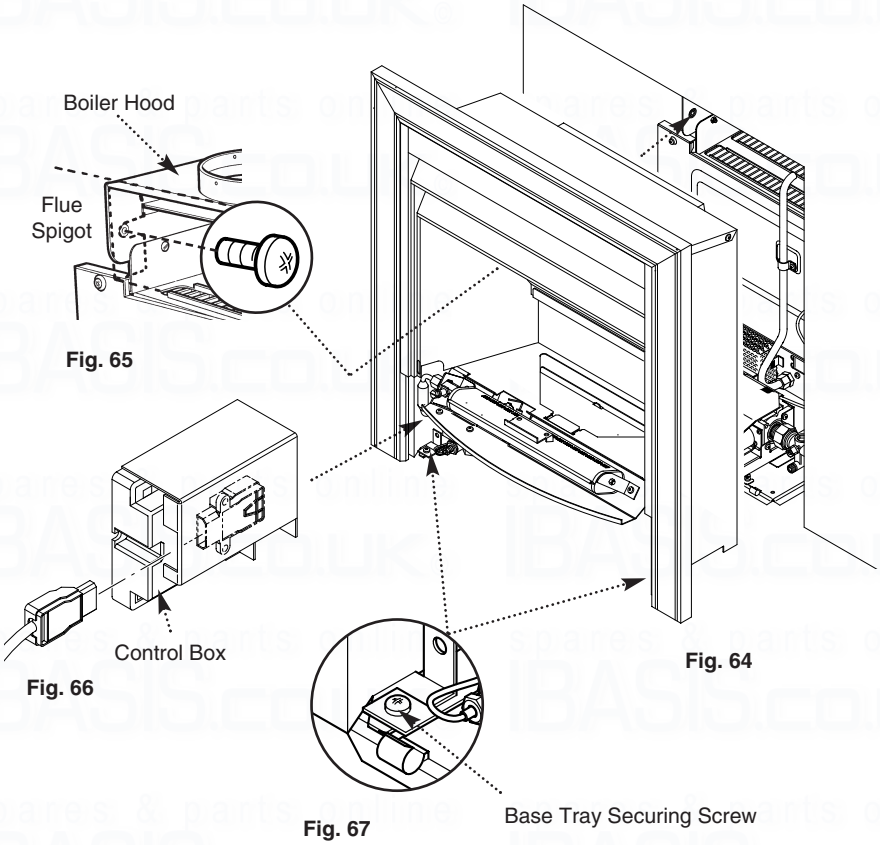

10.1 Changing Components (continued)

9. Remove the two screws retaining the sides of the fire combustion box to the fire base tray (Fig. 67).

10. Remove the two screws inside the flue spigot (Fig. 65).

11. Disconnect the electrical plug from the socket (Fig. 66).

12. Slide the fire combustion box forward to disengage it from the flue spigot and lift away (Fig. 64) taking care not to snag any electrical wiring.

NOTE: After changing any components carry out checks for gas soundness.

10.2 Burner and Injector

1. Undo the screw holding the burner to the controls mounting plate, and disengage the burner inlet from the injector (Fig. 68).

2. Fit the new burner in reverse order.

To change the injector remove the burner as described above.

3. Using a spanner on both the adaptor barrel and fire injector, remove the injector from the barrel (Fig. 69).

4. Fit the new injector.

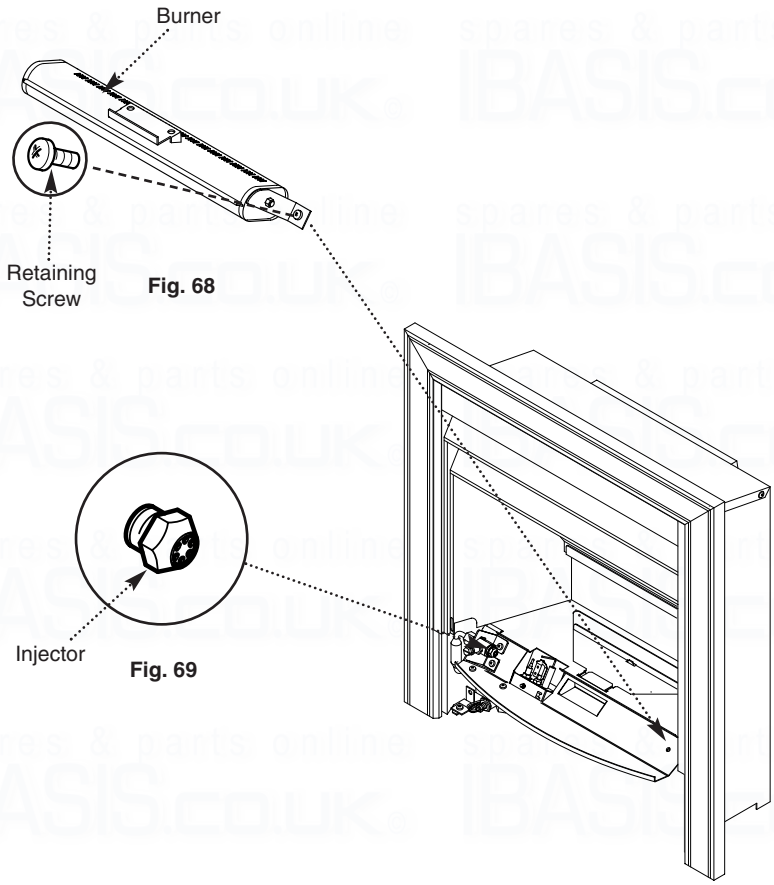

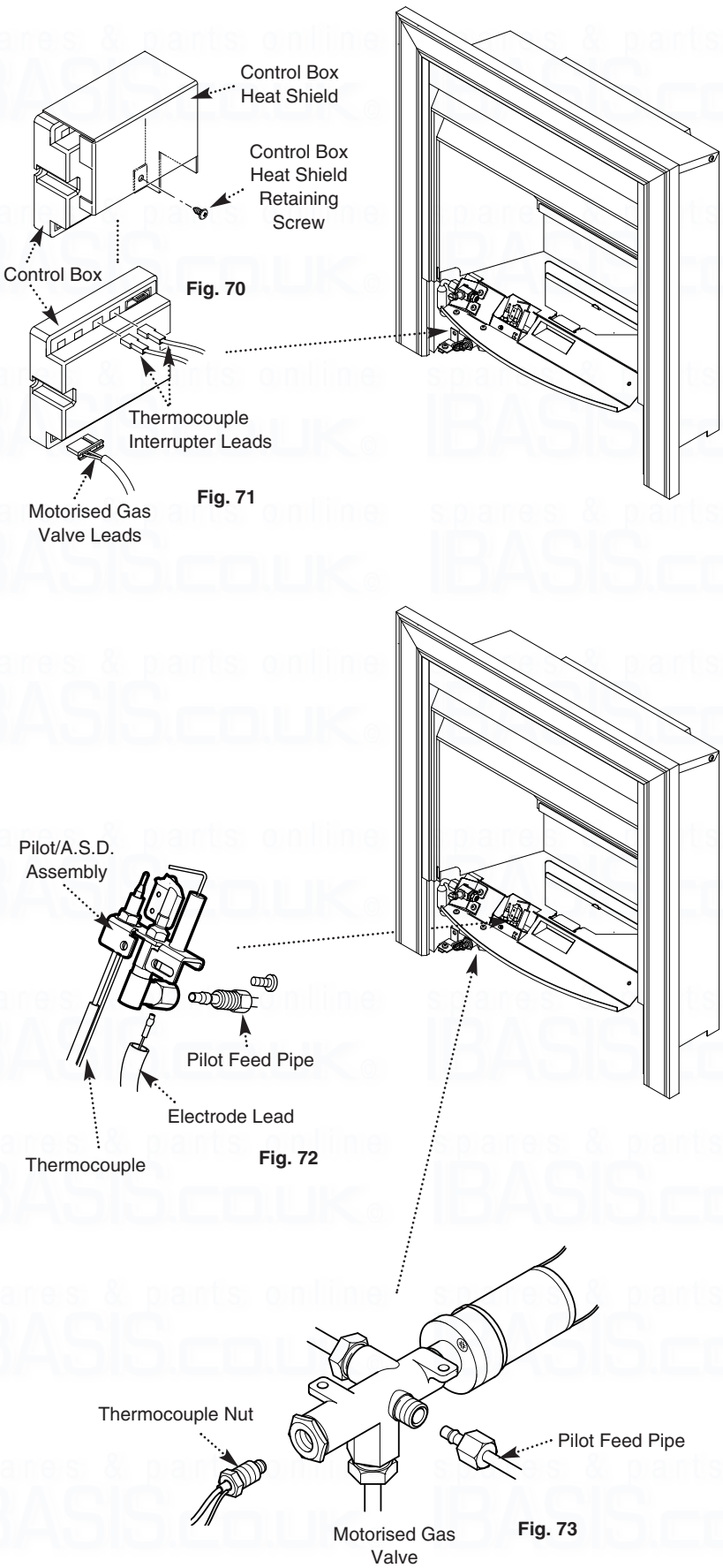

10.3 Pilot/A.S.D. Assembly

NOTE: The thermocouple cannot be changed as an individual component. The complete assembly must be replaced in the event of one or other component failure(s).

1. Disconnect the electrode lead from the electrode (Fig. 72) and the motorised gas valve leads from the control box (Fig. 71).

2. Undo the thermocouple nut from the front of the motorised gas valve and disconnect the pilot feed pipe from the valve and pilot/A.S.D. assembly (Figs. 72 & 73).

3. Undo the screw holding the pilot/A.S.D. assembly to the controls mounting plate and remove (Fig. 72).

4. Disconnect the earth point.

5. Remove the control box heat shield retaining screw and place the shield to one side (Fig. 70).

6. Disconnect the two thermocouple interrupter leads at the control box (Fig. 71).

7. Shape the thermocouple of the replacement pilot/A.S.D. assembly in a similar manner to the original and fit in reverse order.

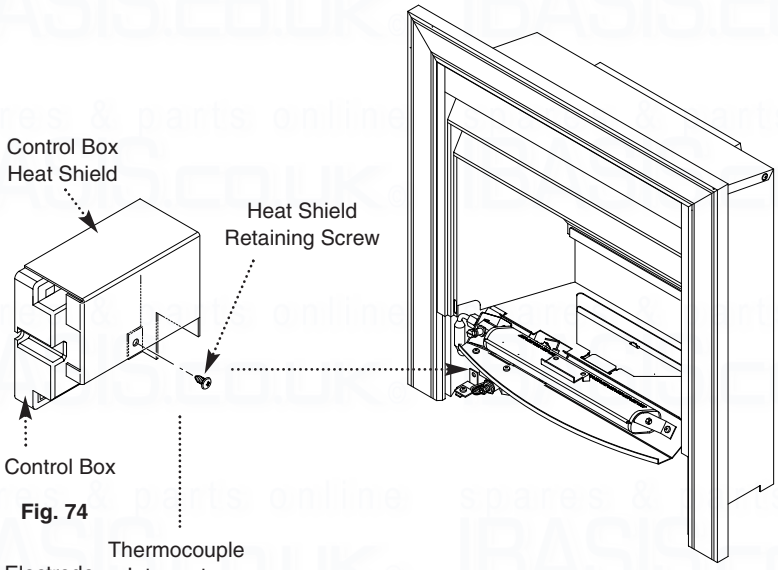

Fig. 74

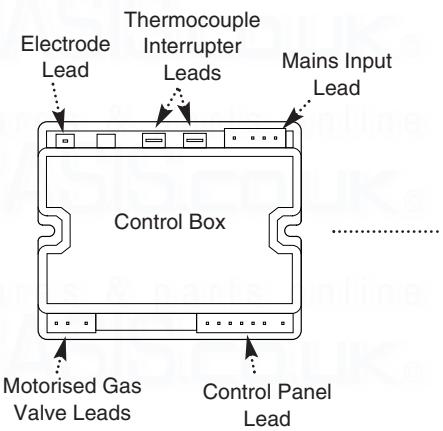

Fig. 75

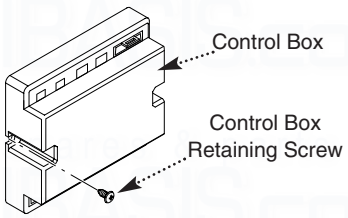

Fig. 76

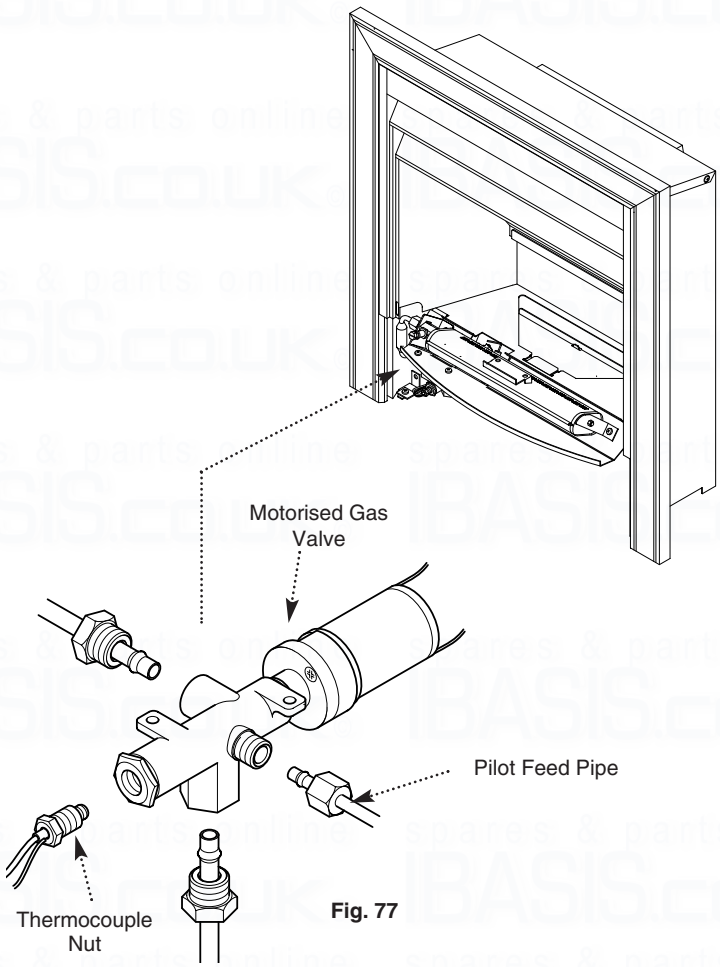

Fig. 77

10.4 Control Box

1. Disconnect the earth point.

2. Remove the control box heat shield retaining screw and place the shield to one side (Fig. 74).

3. Disconnect all of the wiring connections from the control box taking note of their positions (Fig. 75).

4. Slacken the rear control box retaining screw.

5. Undo the front retaining screw and remove the control box (Fig. 76).

6. Fit the new control box and reassemble in reverse order.

10.5 Motorised Gas Valve (Fig. 77)

1. Undo the thermocouple nut from the front of the motorised gas valve, and disconnect the three gas pipes from the tap body.

2. Disconnect the motorised gas valve leads from the control box (Fig. 75).

3. Undo the two screws holding the gas valve to its' bracket. Remove the valve, slackening the gas pipes at their other connections if necessary.

4. Fit the new motorised gas valve in reverse order.

5. Check gas soundness (leak detector).

10.6 Control Panel

1. Disconnect the control panel connector from the front of the valve bracket (Fig. 79).

2. Lift the surround trim away from combustion box (Fig. 78).

3. Remove the cable clamp which secures the control panel cable (Fig. 80).

4. Remove the two control panel securing nuts and remove the panel (Fig. 80).

5. Fit the new control panel taking care not to overtighten the securing nuts and reassemble in reverse order.

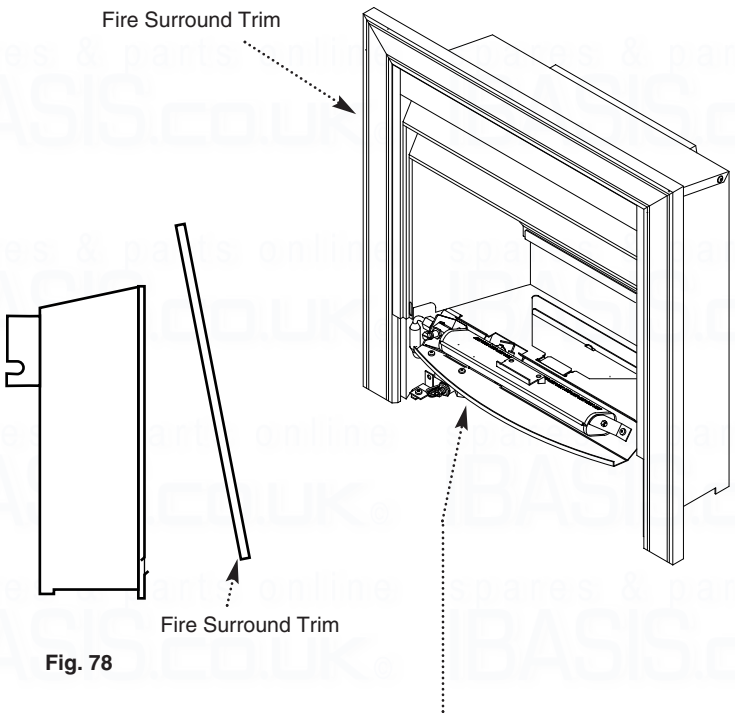

Fig. 78

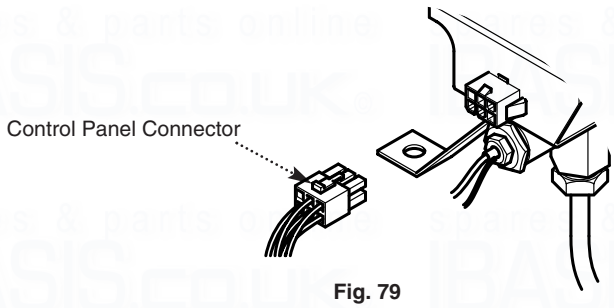

Fig. 79

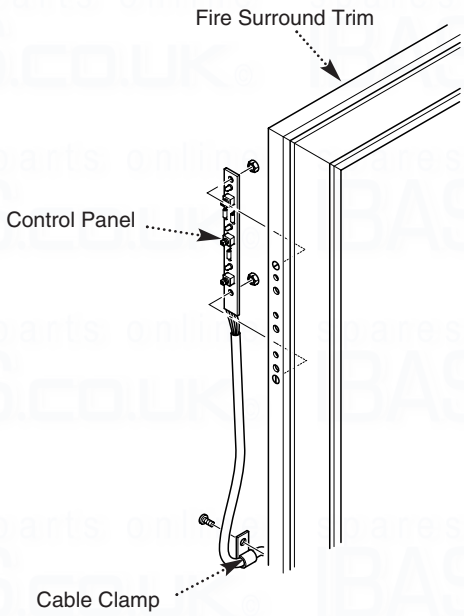

Fig. 80

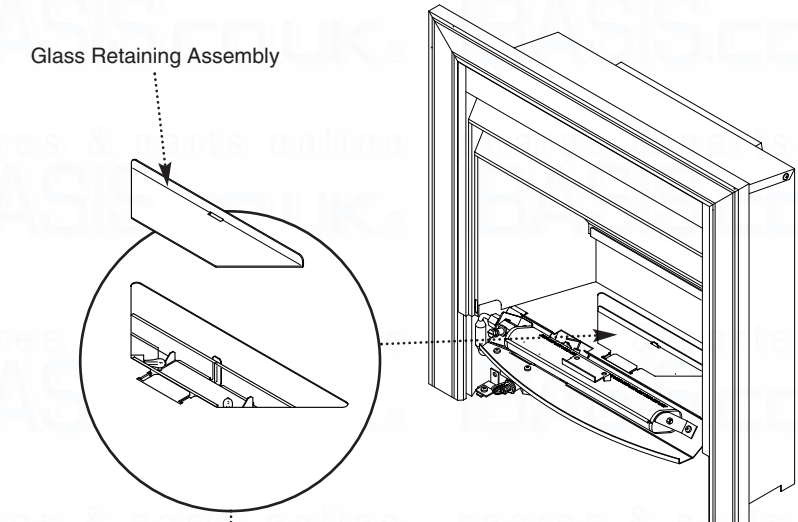

Fig. 81

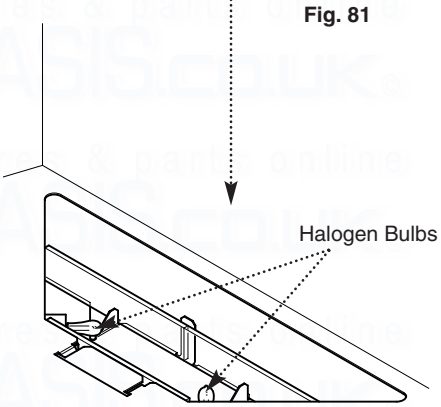

Fig. 82

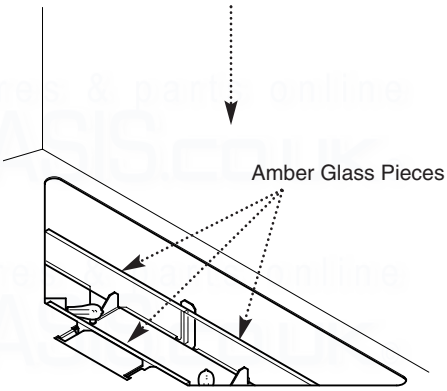

Fig. 83

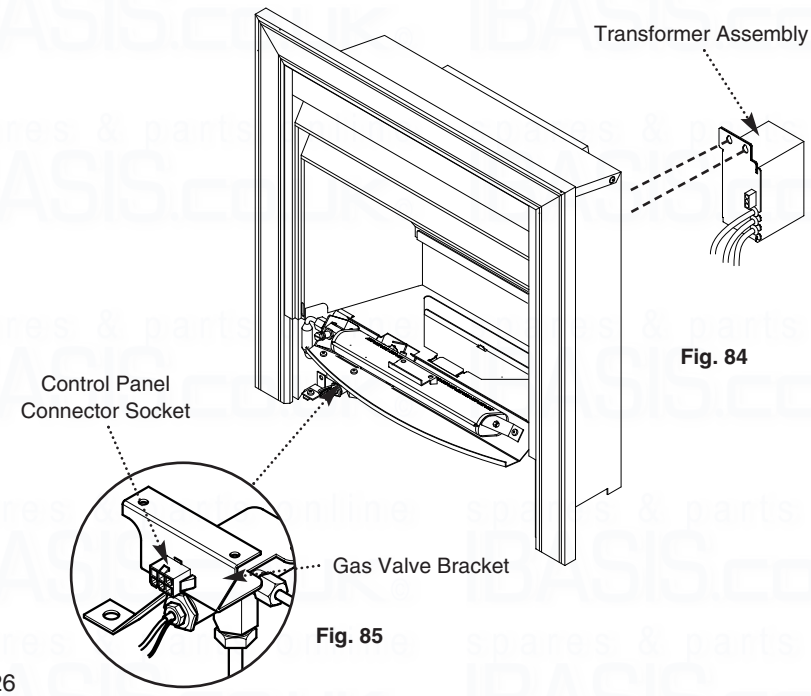

Fig. 84

Fig. 85

10.0 Changing Components

10.7 Bulbs

IMPORTANT: Only replace the bulb/s with a 12V 20W halogen capsule bulb available at most DIY outlets, specialist electrical stores or through Baxi.

1. Remove the coals, placing them on a newspaper or similar to prevent soiling furnishings.

2. Lift out the glass retaining assembly (Fig. 81).

3. Remove the bulb by pulling out from the ceramic bulb holder to disengage the pins (Fig. 82).

4. Fit the replacement bulb in reverse order.
NOTE: Halogen bulbs should not be handled with bare fingers. Always use a cloth to grip the bulb.

5. Replace the glass retaining assembly and reassemble the coal bed.

10.8 Glass

1. Remove the coals, placing them on a newspaper or similar to prevent soiling furnishings.

2. Lift out the glass retaining assembly (Fig. 81).

3. Carefully remove the three amber glass pieces (Fig. 83).

4. Fit the new glass and reassemble the coals.

10.9 Transformer Assembly (Fig. 84)

The transformer assembly is situated at the rear of the fire at the left hand side.

1. Loosen the two screws, securing the assembly to the rear of the fire.

2. Slide the assembly upwards and disengage from the fire back.

3. Disconnect the control panel connector socket from the gas valve bracket (Fig. 85).

4. Disconnect the two bulb connections to the transformer.

5. Disconnect the two control box connections to the transformer.

6. Reassemble in reverse order.

11.0 Fault finding

Before starting Fault Finding carry out preliminary electrical system checks i.e. Earth Continuity, Polarity, Short Circuit and Resistance to Earth.

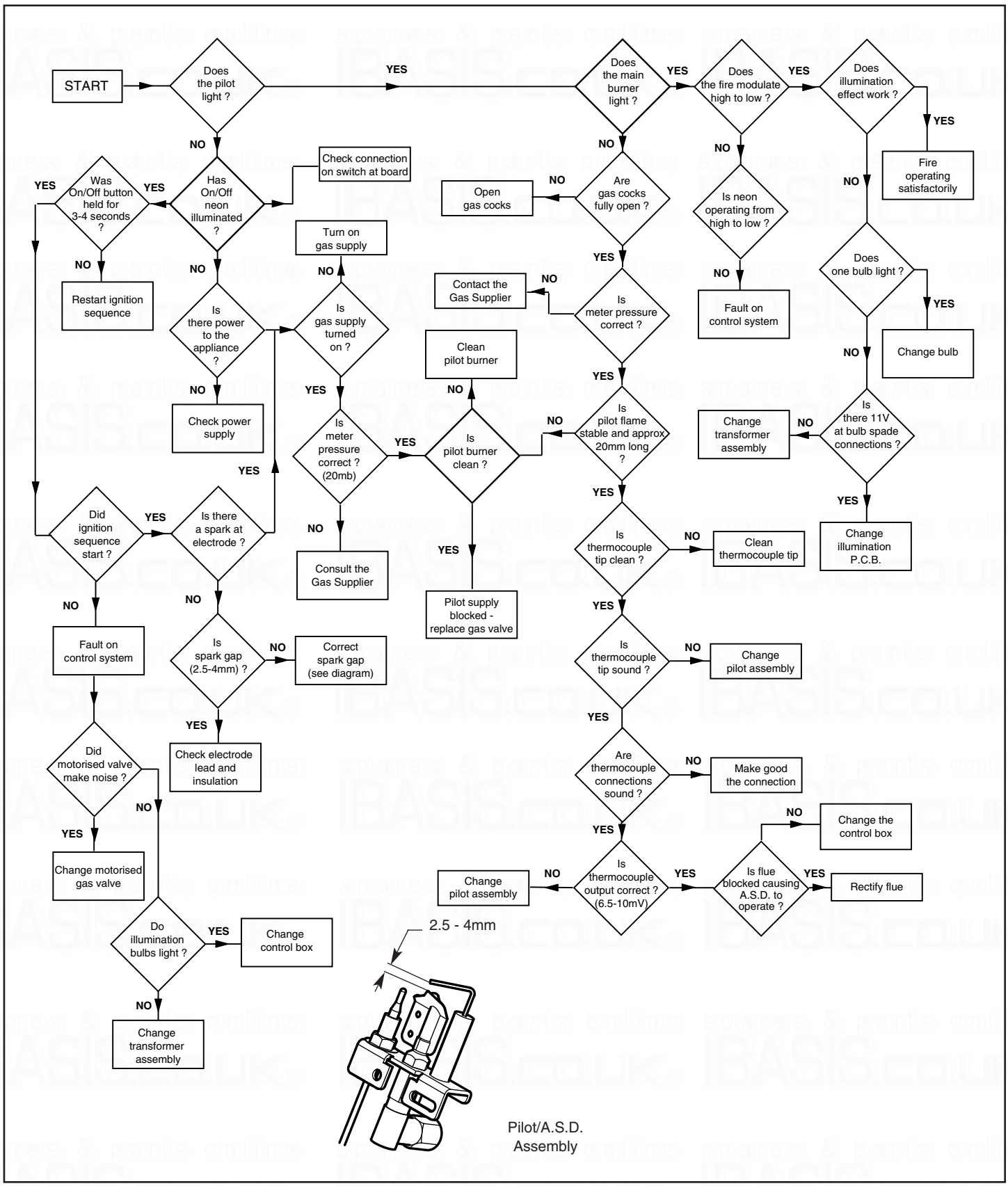

Sequence of Automatic Control System

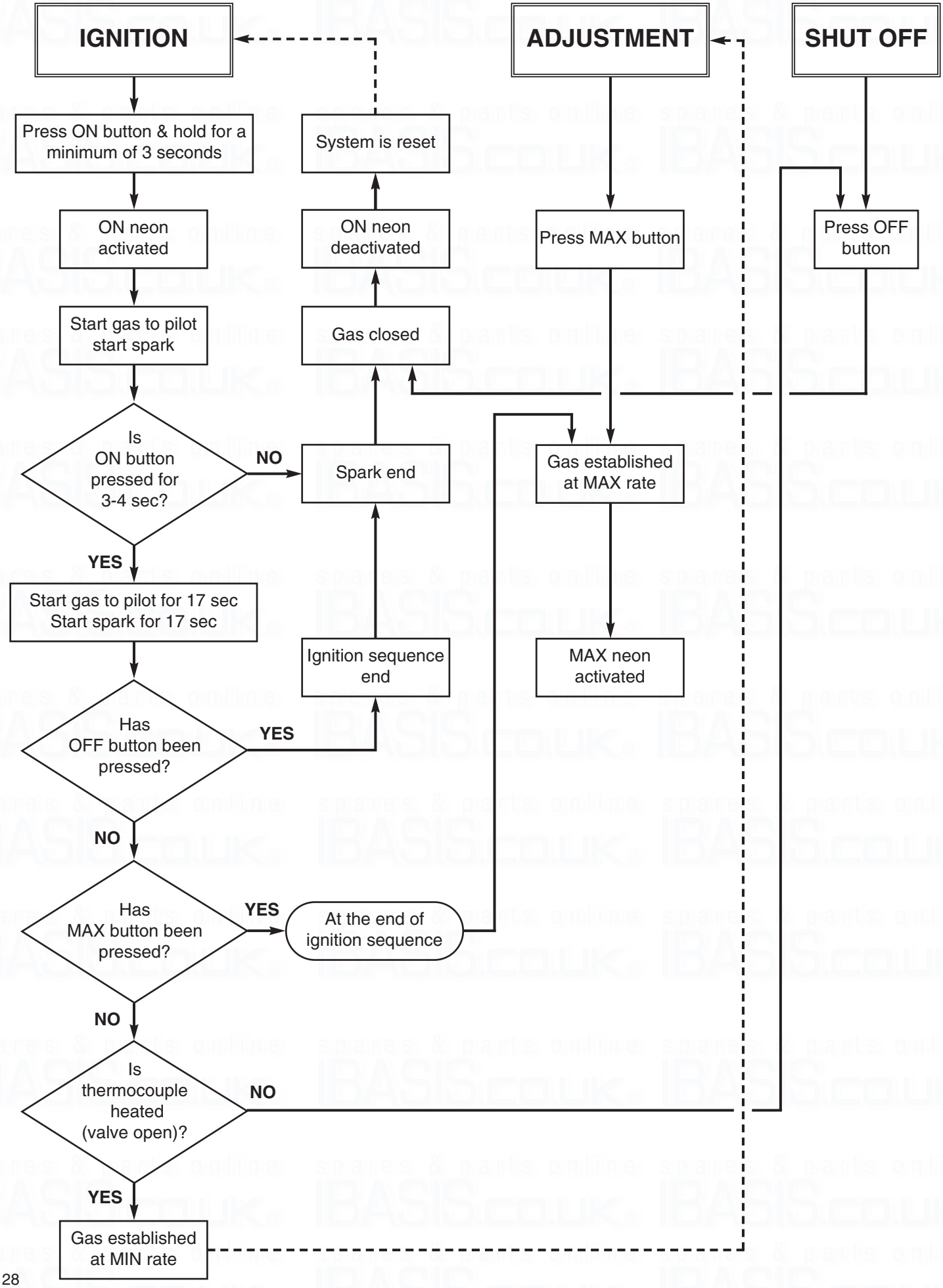

In the event of a gas or electrical failure

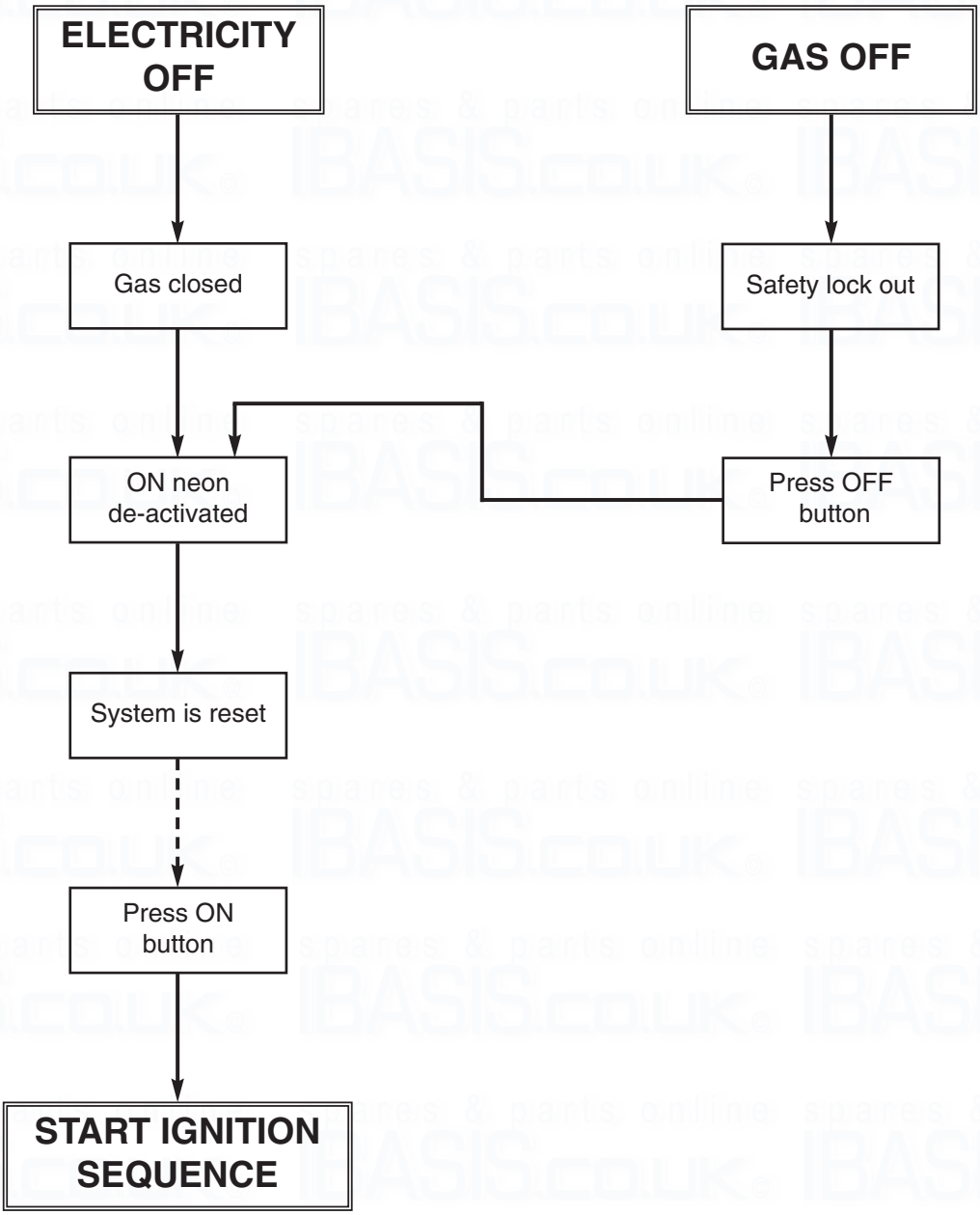

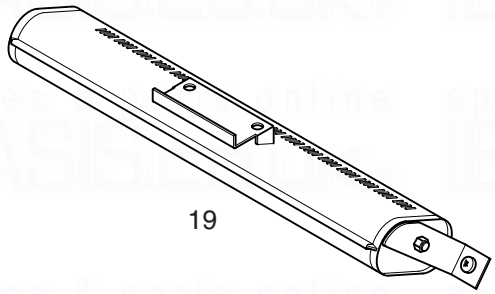

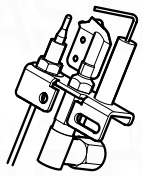

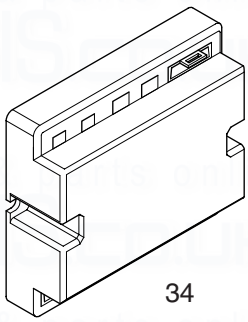

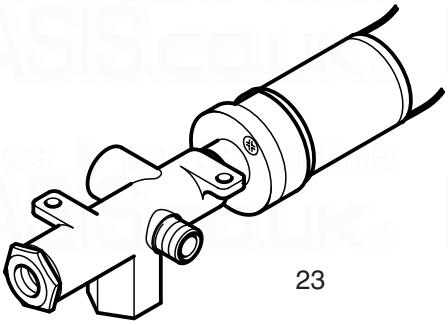

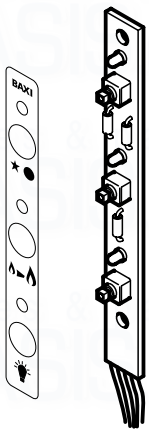

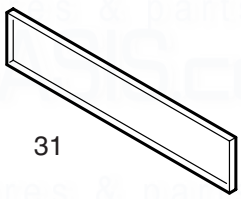

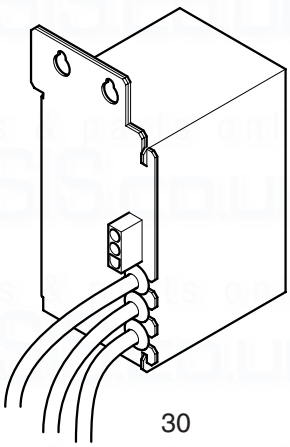

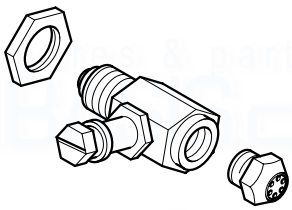

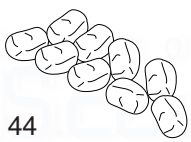

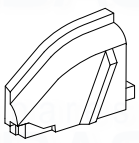

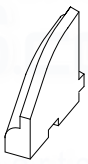

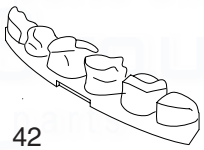

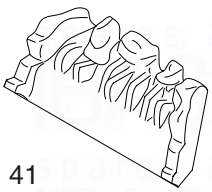

13.0 Short parts list

Short Parts List

Key No.	G.C. No.	Description	Manufacturers Part No.
4	E37 182	Switch Control Panel	246358
5	E37 183	Decal Controls	246359
13	E37 189	Lamp Capsule 12v 20w	246365
19	E60 865	Burner	247238
20	E04 808	Oxypilot	240096
23	E25 190	Motorised Valve Kit	244951
28	E37 200	Injector Kit	246370
30	E60 867	Transformer Box Assy	5107115
31	E37 203	Glass	246373
34	E04 825	Control Box	5107545
39	E65 281	Side Cheeks	248555
41	E60 875	Rear Coal	247607
42	E60 876	Front Coal	247608
44	E59 197	Coals Loose Pack of 9	247327

Baxi manufacture a comprehensive range of products for the domestic heating market

Gas Central Heating Boilers
(Wall, Floor and Fireside models).

Independent Gas Fires.

Renewal Firefronts.

Gas Wall Heaters.

Solid Fuel Fires.

If you require information on any of these products, please write to the Sales Department.

spares & parts online IBASIS.CO.UK

BAXI POTTERTON
Brownedge Road Bamber Bridge Preston Lancashire PR5 6SN
After Sales Service 08706 096 096 Technical Enquiries 08706 049 049
www.baxi.co.uk

Comp N° 247852 - Iss 5 - 1/03