Please leave these instructions with the user

Baxi Bermuda Inset 3 Range

Fireside Gas Central Heating Units

Installation and Servicing Instructions

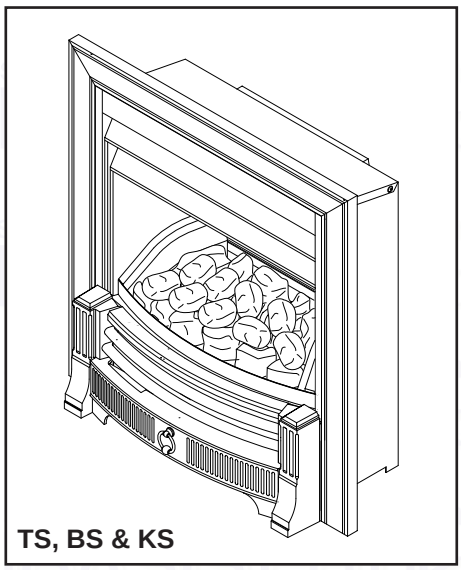

TS, BS & KS

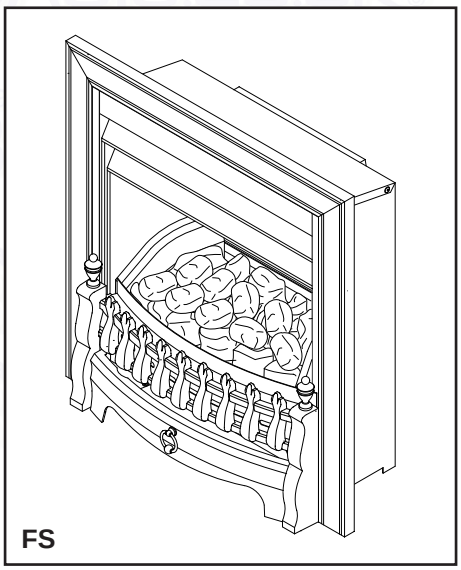

FS

BAXI

spares & parts online IBASIS.CO.UK

Natural Gas

Baxi Bermuda Inset 3 TS
G.C.No. 37 075 53

Baxi Bermuda Inset 3 BS
G.C.No. 37 075 52

Baxi Bermuda Inset 3 KS
G.C.No. 37 075 50

Baxi Bermuda Inset 3 FS
G.C.No. 37 075 51

For use with the following boiler:

Baxi Bermuda Inset 2 Boiler 50/4
G.C.No. 44 075 01

Baxi UK Limited is one of the leading manufacturers of domestic heating products in the UK.

Our first priority is to give a high quality service to our customers. Quality is built into every Baxi product - products which fulfil the demands and needs of customers, offering choice, efficiency and reliability.

To keep ahead of changing trends, we have made a commitment to develop new ideas using the latest technology - with the aim of continuing to make the products that customers want to buy.

Everyone who works at Baxi has a commitment to quality because we know that satisfied customers mean continued success.

We hope you get a satisfactory service from Baxi. If not, please let us know.

Baxi is a BS-EN ISO 9001
Accredited Company

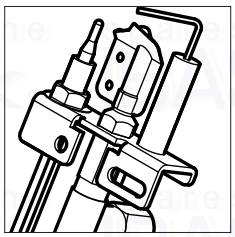

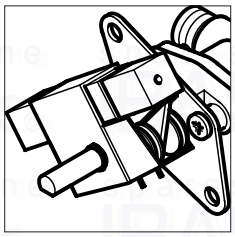

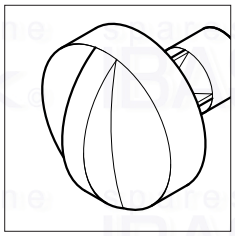

Contents

Section		Page
1.0	**Introduction**	4
2.0	**Technical Data**	5
3.0	**Site Requirements**	6
	Fireplace Opening	
	Hearth Mounting	
	Ventilation	
4.0	**Installation**	8
	Initial Preparation	
	Gas Supply	
	Fitting the Fire	
5.0	**Arranging the Coals**	9
	Arranging the Coals	
	Commissioning the Fire	
	Arranging the Coals (cont)	
6.0	**Checking for Spillage**	12
	Checking for Spillage	
	The Spillage Checking Procedure	
	Possible Causes of Spillage	
	Completion	
7.0	**Annual Servicing**	14
	Annual Servicing	
	Preparation	
	Removal of Controls	
	Cleaning the Burner & Injectors	
	Cleaning the Pilot/A.S.D. Assembly	
	Cleaning the Combustion Box & Coals	
	Replacing the Fire	
8.0	**Changing Components**	18
	Changing Components	
	Burner and Injector	
	Pilot/A.S.D. Assembly	
	Gas Tap	
	Igniter Unit	
	Electro-Magnetic Unit	
9.0	**Fault Finding**	21
10.0	**Short Parts List**	22

spares & parts online IBASIS.CO.UK

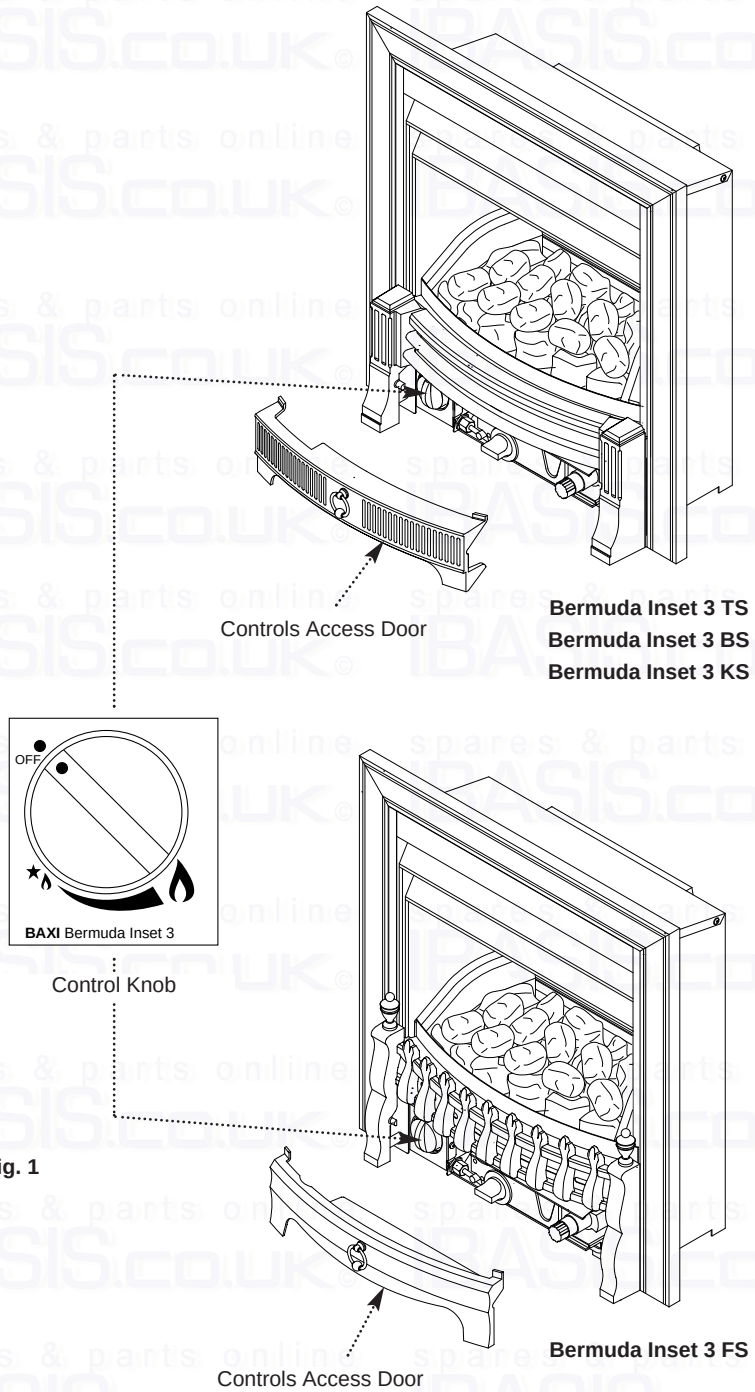

Fig. 1

Notice

Discolouration of wall surfaces

Most heating appliances generate warm air convection currents and transfer heat to any wall surface against which they are situated.

Some soft furnishings (such as blown vinyl wallpapers) may not be suitable for use where they are subject to temperatures above normal room levels and the manufacturer's advice should be sought before using this type of wall covering adjacent to any heating appliance.

The likelihood of wall staining from convected air currents will be increased in environments where high levels of cigarette smoke or other contaminants exist.

1.0 Introduction

1.1 Description

1. The Baxi Bermuda Inset 3 TS, Inset 3 BS, Inset 3 KS and Inset 3 FS are combined gas fired central heating boiler and gas fire units, designed for installation in a living room with a heat input of 6.52kW (22,246 Btu/h) at maximum setting.

2. The boiler and fire unit is designed to be used on **Natural Gas only.**

3. The fire is controlled by a knob which is positioned behind the controls access door on the fender assembly (Fig. 1). The knob has three positions:

Position ●	OFF
Position ★🔥	IGNITION / PILOT / LOW
Position 🔥	HIGH OUTPUT

4. The control can be set anywhere between LOW and HIGH.

1.2 Installation

1. The appliance is suitable for installation only in G.B. and I.E. and should be installed in accordance with the rules in force. For Ireland install in accordance with I.S.813 **"Installation of Gas Appliances"**. The installation must be carried out by a CORGI Registered Installer or other competent person and be in accordance with the relevant requirements of **Gas Safety** (Installation and Use) **Regulations**, the **Building Regulations** (Scotland) (Consolidation), the **Local Building Regulations**, the **Current I.E.E. Wiring Regulations** and the bye laws of the Local Water Undertaking. Where no specific instructions are given, reference should be made to the relevant **BRITISH STANDARD CODES OF PRACTICE.**

2. **These Instructions must be read in conjunction with those for the Boiler Section before installing or using this appliance.**

1.3 Important Information

This product contains Refractory Ceramic Fibres (R.C.F.) which are man-made vitreous silicate fibres. Excessive exposure to these materials may cause temporary irritation to eyes, skin and respiratory tract. Care must be taken when handling these articles to ensure the release of dust or fibres is kept to a minimum. To ensure that the release of fibres from these articles is kept to a minimum, during installation and servicing it is recommended that a H.E.P.A. filtered vacuum is used to remove any dust, soot or other debris accumulated in and around the appliance. This should be performed before and after working on the installation. It is recommended that any replaced item(s) are not broken up but sealed within heavy duty polythene bags and clearly labelled "R.C.F. waste". This is not classified as "hazardous waste" and may be disposed of at a tipping site licensed for the disposal of industrial waste. Protective clothing is not required when handling these articles but it is recommended that gloves are worn and the normal hygiene rules of not smoking, eating or drinking in the work area are followed and always wash hands before eating or drinking.

2.0 Technical Data

Bermuda Inset 3 TS
Bermuda Inset 3 BS
Bermuda Inset 3 KS
Bermuda Inset 3 FS

The fire is set for Gas Type G20 at 20mbar.

Heat Input	High	Low
kW	6.52	4.1
Btu/h	22,246	13,989

Setting Pressure	Cold
mbar	9.0
in wg	3.6

Thermocouple Output	6.5 - 10.0 mv
Gas Connection	The gas supply is provided from the service cock on the boiler unit
Controls	Rotary gas tap with flame failure device and atmospheric sensing device
Gas Rate (after 10 mins)	0.60 m^3/h (21.0 ft^3/h)
Installation Lifting Weight	8.5 kg (18.7 lbs)

Outercase Dimensions	Height	610mm
	Width	593mm
	Depth (from the wall)	103mm

B.S. Codes of Practice

STANDARD	SCOPE
B.S. 6891	Gas Installation.
B.S. 5546	Installation of hot water supplies for domestic purposes.
B.S. 5449	Forced circulation hot water systems.
B.S. 6798	Installation of gas fired hot water boilers.
B.S. 5440: Pt 1	Flues
B.S. 5440: Pt 2	Air Supply.
B.S. 5871: Pt 1	Installation of fire/back boilers, gas appliances.
B.S. 6500	Cables.

NOTE: All illustrations show the Inset 3 TS. The procedure for Installation, Commissioning, Servicing etc. is the same for all Bermuda Inset 3 models.

spares & parts online IBASIS.CO.UK

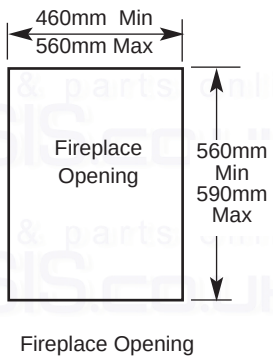

Fig. 2

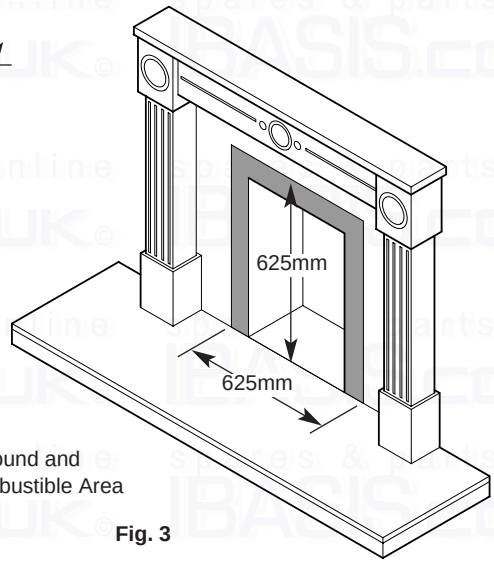

Fig. 3

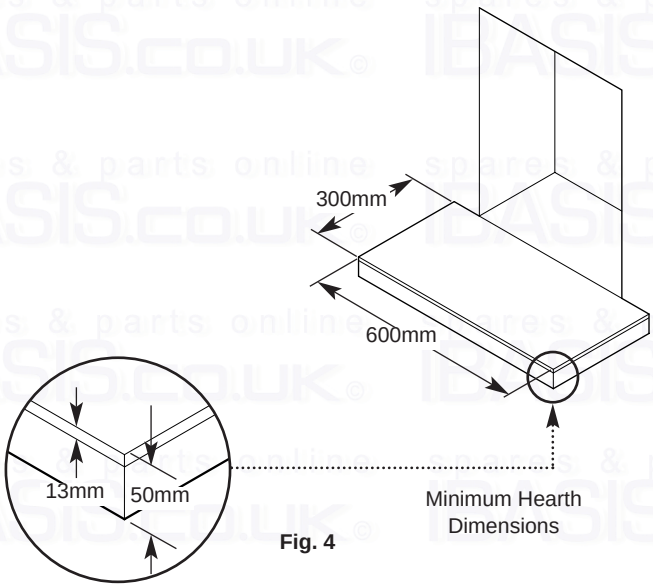

Fig. 4

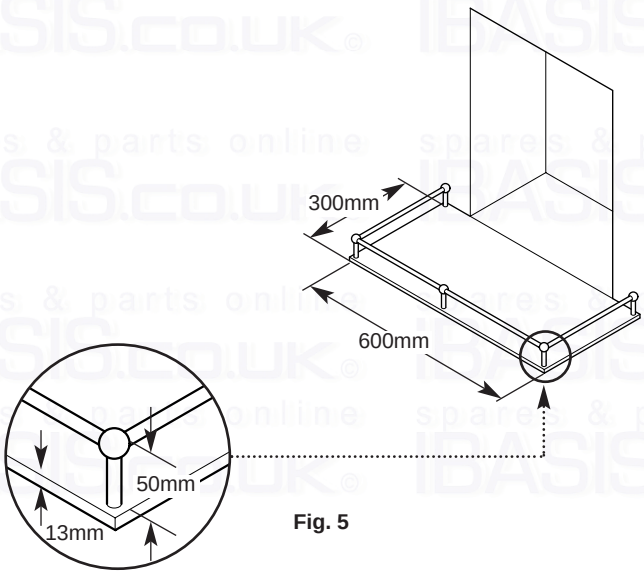

Fig. 5

3.0 Site Requirements

3.1 Fireplace Opening

1. The principal site requirements are determined by the boiler unit, but the following details are essential for the correct installation of the fire unit:

Fireplace Opening (Fig. 2):

Height:	560mm (22in) min
	590mm ($23^{15}/_{64}$in) max
Width:	460mm (18in) min
	560mm (22in) max

NOTE: The wall or surround behind the fire must be non-combustible.

Non-Combustible area (Fig. 3):

Height	625mm ($24^{19}/_{32}$in)
Width	625mm ($24^{19}/_{32}$in)

2. Any gaps between the wall and the surround must be sealed. A shelf, not projecting more than 178mm (7in), may be fitted at least 126mm (5in) above fire or 180mm ($7^{1}/_{8}$in) for 229mm (9in) deep shelf.

3.2 Hearth Mounting

1. The fire unit is intended to be hearth mounted. The hearth must be of a non-combustible material at least 13mm ($^{1}/_{2}$in) thick and measuring at least 300mm (12in) deep by 600mm ($23^{5}/_{8}$in) wide and fitted centrally about the fireplace opening. The top surface of the hearth should be a minimum of 50mm (2in) above floor level and must be level with the base of the builders opening (Fig. 4).

2. **On no account should the fire unit be fitted directly onto a combustible floor or carpet.**

3. Alternatively, a fender rail or upstanding edge of 50mm (2in) height can be fitted to the periphery of the 13mm ($^{1}/_{2}$in) non-combustible hearth (Fig. 5).

NOTE: If the firefront must be wall mounted, it is still necessary to fit a hearth of the dimensions shown.

spares & parts online IBASIS.CO.UK

3.0 Site Requirements

3.3 Ventilation

1. Ventilation air supply to BS 5440 Pt 2 is required. The permanent ventilation area size requirements are as shown:

80.1cm² **12.42in²**

2. The permanent vent may be directly into the room containing the appliance. The vent may also be sited in another (not a bedroom, toilet, bathroom or kitchen) room provided an interconnecting vent is used.

3. The vent must not be installed inside the builders opening. The vent should be sited following good practise for a habitable room.

4. We recommend the use of the Stadium BM720 “Black Hole” ventilator which is available from your local merchant.

spares & parts online IBASIS.CO.UK ©

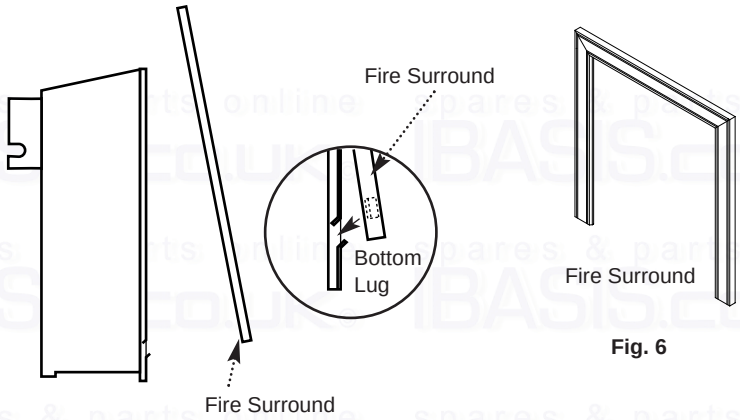

Fig. 7

Fig. 6

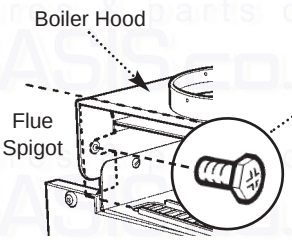

Fig. 9

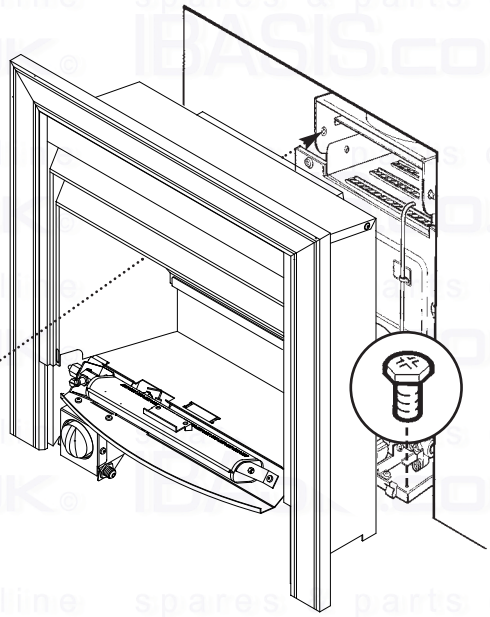

Fig. 8

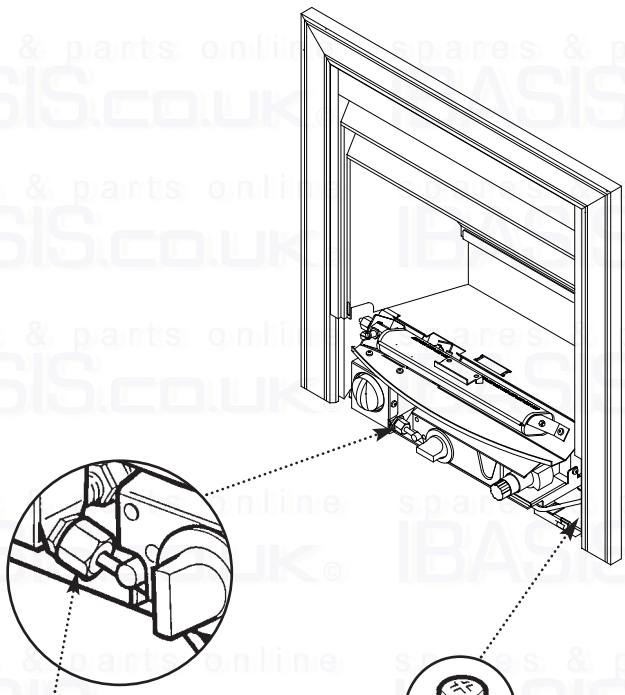

Fig. 11

Fig. 10

4.0 Installation

4.1 Initial Preparation

1. Unpack the fire unit from the box. The fire surround, coal bed and fender assembly are packed in individual boxes within the main carton and should be left in these boxes until required.

4.2 Gas Supply

1. The gas installation should be in accordance with BS6891. The gas supply to the fire is provided from the service cock on the boiler using the supply pipe provided in the fire kit. The pipe is the correct length and will not need shortening.

4.3 Fitting the Fire

1. Remove the two thread forming screws from the front corners of the boiler base tray (Fig. 8).

2. Remove the fire surround from its packaging (Fig. 6).

NOTE: The surround is easily distorted and should be handled carefully.

3. Position the fire surround around the fire combustion box and lower it into position, ensuring that the top lugs locate onto the top of the fire combustion box and the bottom lugs locate into the slots in the sides of the combustion box (Fig. 7).

4. Position the fire in the fireplace opening and ensuring that the flue spigot locates into the downdraught diverter on the boiler, push the fire back into the opening. Look through the fire to align the two slots in the flue spigot with the holes in the boiler hood (Fig. 9).

5. Fit the two screws that locate the fire combustion box to the boiler base tray (Fig. 10).

6. Fit and tighten the two screws inside the fire flue spigot (Fig. 9).

7. Fit the fire gas supply pipe (Fig.11).

5.0 Commissioning the Fire

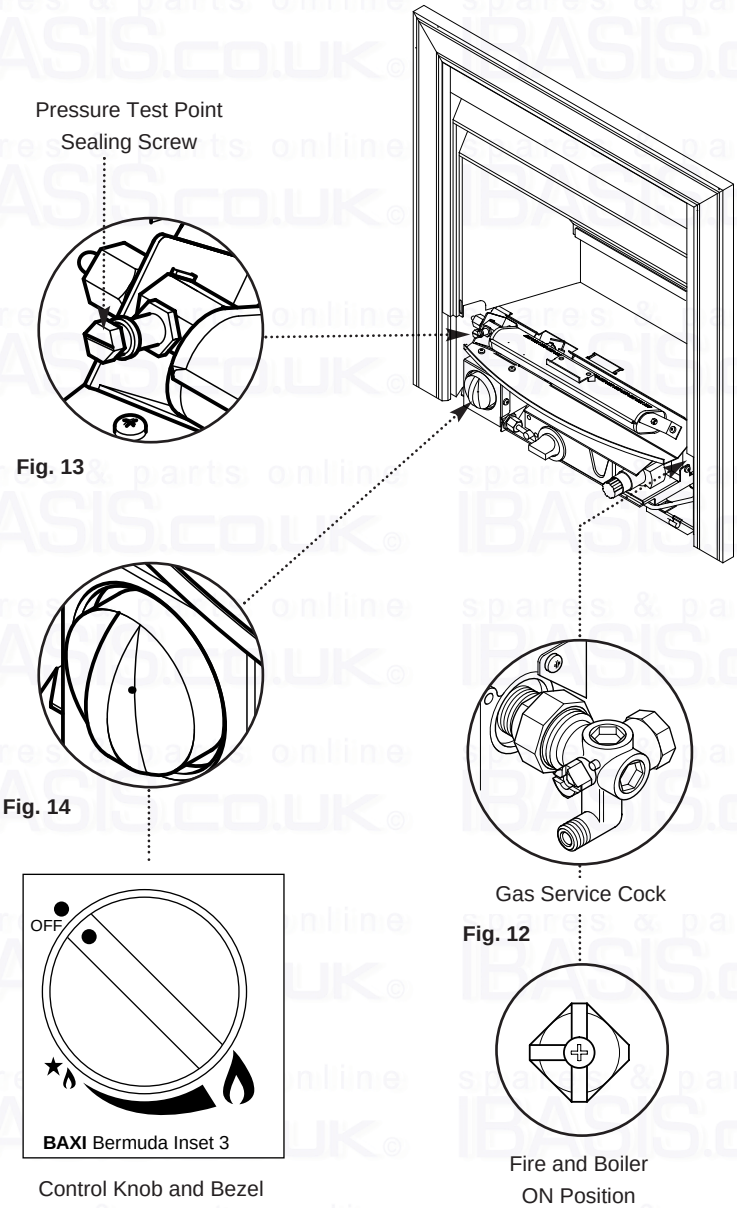

5.1 Commissioning the Fire

1. Turn on the main gas supply.

2. Turn the gas service cock to the fire and boiler on position as shown, then purge any air from the flre supply pipe (Fig. 12).

3. Check for gas soundness from the gas service cock to the fire inlet connection. (BS 6891).

4. Release the pressure test point sealing screw from the injector adaptor and connect a pressure gauge (Fig. 13).

5. Push in the control knob and turn anti-clockwise to the ignition position and hold in for 10 seconds. If the fire fails to remain alight, or goes out at any time, wait 2 minutes and repeat the procedure. Turn the control knob to the High position (Fig. 14).

Position ●	OFF
Position ★🔥	IGNITION / PILOT / LOW
Position 🔥	HIGH OUTPUT

6. Check the fire gas pressure.
The pressure should be 9.0 mbar (3.6 in wg). If the pressure is not correct, check that all gas cocks are fully open and that the meter pressure is correct. No adjustment to the setting pressure is possible.

7. Turn the control knob to the off (●) position. Disconnect the pressure gauge and replace the pressure test point sealing screw, ensuring a gas tight seal (Figs. 13 & 14).

6.0 Arranging the Coals

6.1 Arranging the Coals

It is important that all the coals are used and arranged as shown in order to achieve the desired flame picture.

1. Remove the loose coals, side cheeks, rear and front coals from their protective packaging and place them on a newspaper or similar to prevent soiling furnishings.

CAUTION: The coals are extremely fragile and must be handled accordingly. Gloves should be worn and any inhalation of the dust should be avoided. Keep the coals away from children at all times. Never use coals other than those originally supplied or Genuine Baxi Spare Parts. Never put additional coals on the fire. Please read section 1.3 Important Information.

2. Place the right / left hand side cheeks against the combustion box side walls (Fig. 15).

3. Locate the rear coal behind the combustion box base front lip and angle it back against the side cheek location stops Figs. 15 & 16).

4. Locate the front coal onto the rear coal side support ledges and behind the lip of the burner bracket (Figs. 16 & 17).

5. Place 5 of the loose coals into the location recesses of the front coal, (flat face downward). The 3 centre coals should rest against the corresponding rear coal spacer lugs. Orientation of the coals should be as shown in order to achieve the desired flame picture (Fig. 18).

6. Place the remaining 4 loose coals between the front loose coals and the rear coal, (flat face downward). Orientation of the coals should be as shown in order to achieve the desired flame picture (Fig. 19).

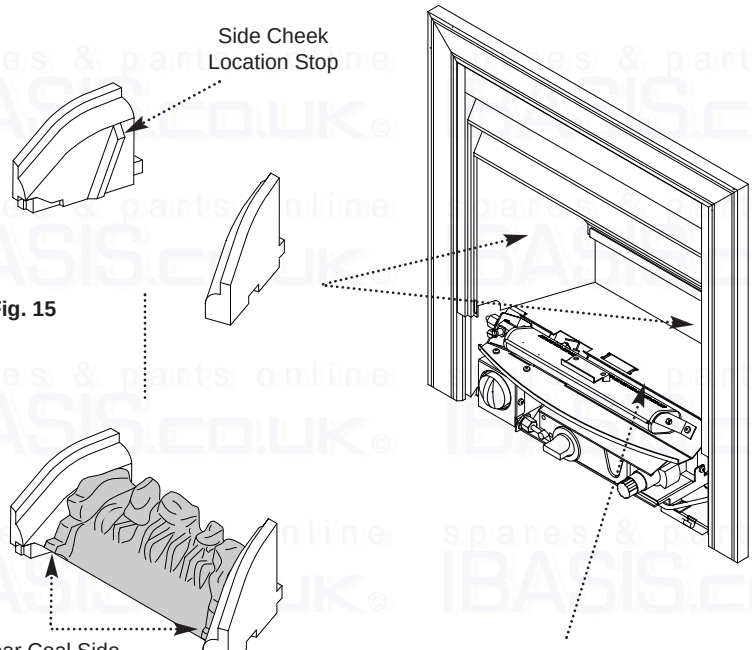

Fig. 15

Fig. 16

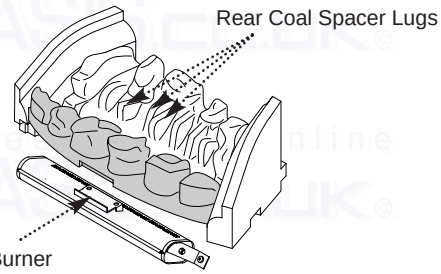

Fig. 17

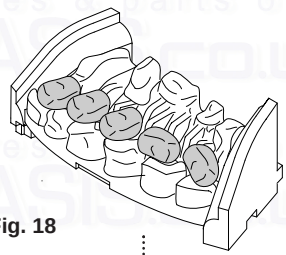

Fig. 18

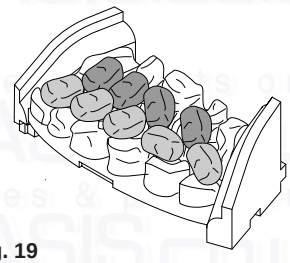

Fig. 19

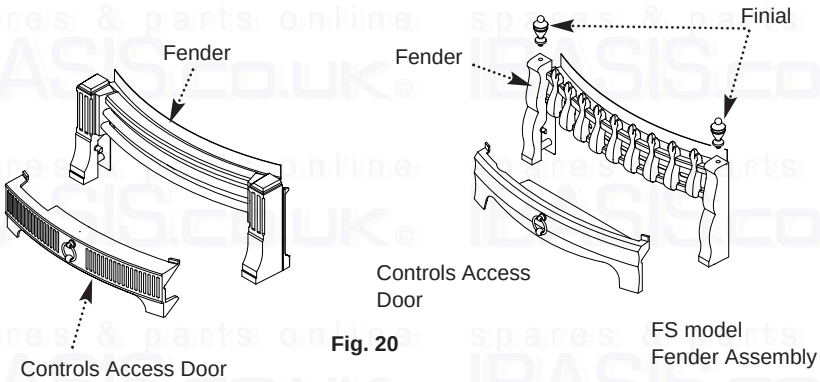

Fig. 20

6.1 Arranging the Coals (cont)

7. At this point it is necessary to fit the fender assembly.

8. Remove the fender from its packing (Fig. 20) (on FS models screw the finials to the fender assembly).

9. Remove the controls access door from the fender assembly (Fig. 20).

10. Hook the fender into the sides of the combustion box (Fig. 21).

11. The appliance must now be checked for spillage.

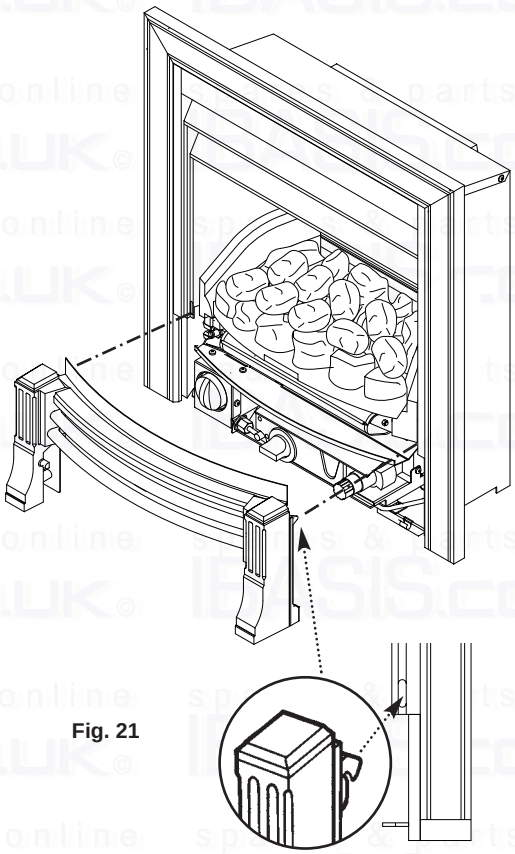

Fig. 21

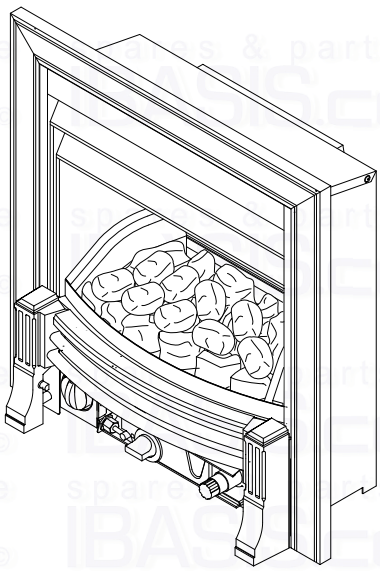

spares & parts online IBASIS.CO.UK

7.0 Checking for Spillage

7.1 Checking for Spillage

CAUTION - Whilst checking for spillage care must be taken to avoid touching hot panels.

1. Before checking for spillage the worst likely operating environment for the appliance must be created. To do this, close all doors and windows in the room and operate any ceiling or extractor fans that may be present, on the wall or within other appliances. If any ceiling or extractor fans are present in an adjoining room then these should be operated and the connecting door left open.

2. There are two stages of appliance operation for which spillage must be checked by following "The Spillage Checking Procedure" shown below (7.2).

3. **STAGE 1** - Commencing with the appliance Cold, operate the fire on maximum for five minutes and check for spillage. If spillage is evident then the fire is operated for a further 10 minutes and re-checked. If spillage is still evident then the cause should be ascertained and rectified before continuing with commissioning.

4. **STAGE 2** - Following a satisfactory result at stage 1, the fire is left on and the boiler is operated (from Cold) for 5 minutes before checking for spillage again. If spillage is evident then the cause should be ascertained and rectified before continuing with commissioning.

5. If the appliance cannot be commissioned then it should be isolated until the problem is resolved.

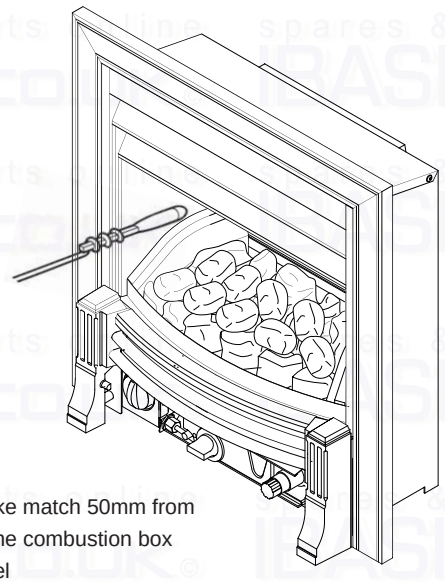

Insert the smoke match 50mm from either side of the combustion box inner side panel

Fig. 22

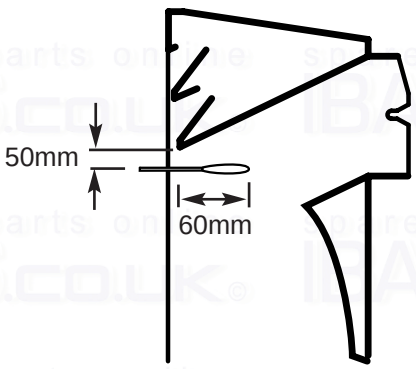

Fig. 23

7.2 The Spillage Checking Procedure

1. A lighted smoke match should be held in a suitable holder 50mm below the lower louvre of the fire and 50mm from either side of the combustion box inner side panel. The majority of smoke should be drawn into the fire (Figs. 22 & 23).

7.3 Possible Causes of Spillage

1. The smoke match may have been positioned incorrectly, resulting in the smoke being picked up by hot convected air currents.

2. The builders opening or flue installation may be unsound.

3. Inadequate ventilation.

4. Down draughts may be present.

5. Flue blockages.

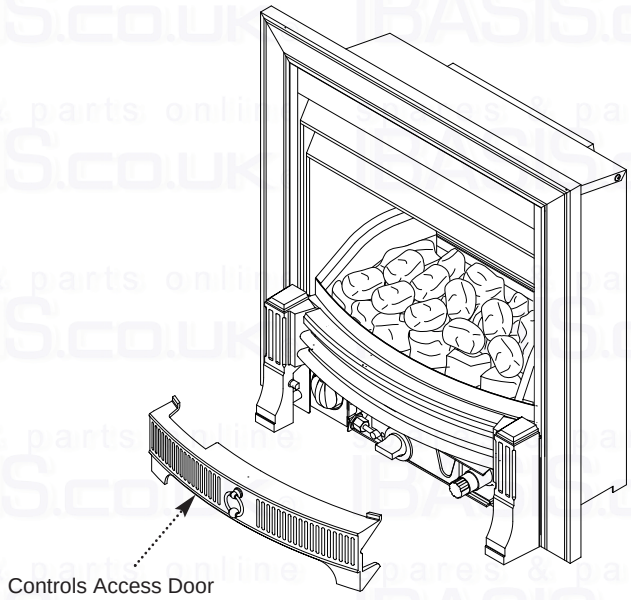

Fig. 24

7.4 Completion

1. Replace the controls access door (Fig. 24).

2. These instructions and the users instructions should be handed to the customer. At the same time the customer should be shown how to operate the fire and boiler safely and efficiently.

3. The need for annual servicing should be emphasised and the returning of the guarantee card advised.

spares & parts online IBASIS.CO.UK

8.0 Annual Servicing

8.1 Annual Servicing

IMPORTANT: It is possible that some soot may be deposited on the coals after use. This is acceptable providing it is not allowed to accumulate.

CAUTION: The coals are extremely fragile and must be handled accordingly. Gloves should be worn and any inhalation of the dust should be avoided. Keep the coals away from children at all times. Never use coals other than those originally supplied or Genuine Baxi Spare Parts. Never put additional coals on the fire. Please read section 1.3 Important Information.

1. For reasons of safety and economy it is important to service the flre and boiler annually.

8.2 Preparation

WARNING: Isolate the gas and electricity supplies to the boiler and fire unit before servicing.

1. In order to service the boiler unit, the fire must be disconnected and removed. Remove the fire as follows-

2. Lift the controls access door away from the fender assembly (Fig. 25).

3. Turn off the gas supply at the service cock (Fig. 27).

4. Carefully remove all the loose coals, side cheeks, rear and front coals (Fig. 28).

5. Lift the fender assembly to disengage it from the hooks and remove it (Fig. 29).

6. Disconnect the gas supply to the fire at the gas tap elbow connection (Fig. 26).

7. Remove the two screws retaining the sides of the fire combustion box to the fire base tray (Fig. 30).

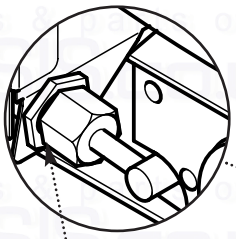

Fig. 26

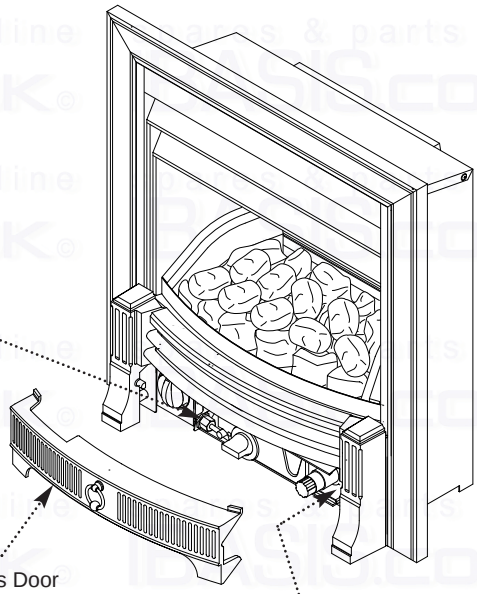

Fig. 25

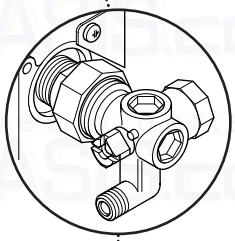

Fig. 27

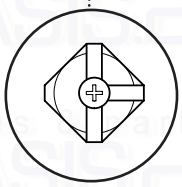

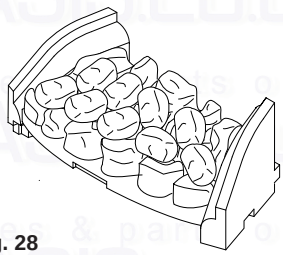

Fig. 28

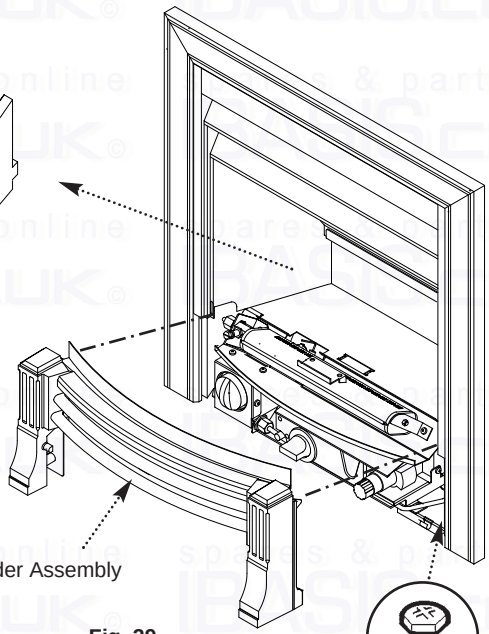

Fig. 29

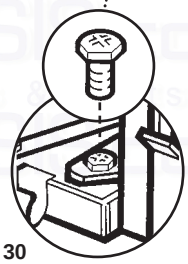

Fig. 30

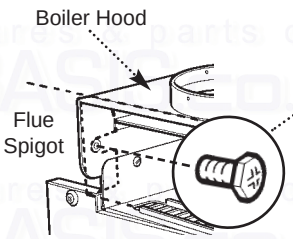

Fig. 31

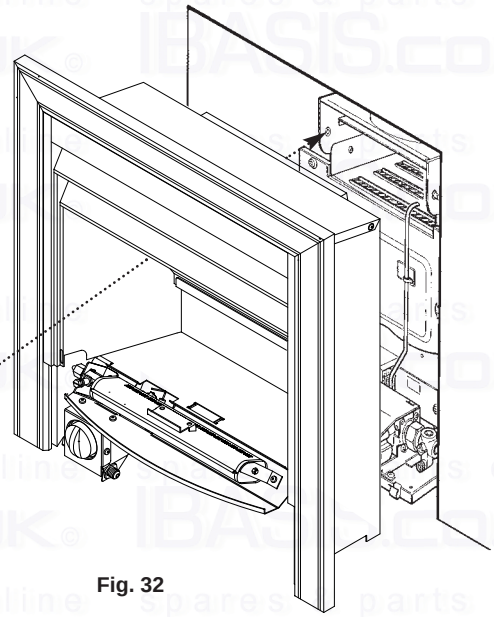

Fig. 32

8.2 Preparation (Cont)

8. Remove the two screws inside the flue spigot (Fig. 31).

9. Slide the fire combustion box forward to disengage it from the flue spigot and lift away (Fig. 32).

8.3 Removal of Controls (Fig. 33)

1. Undo the screw to the lower left hand side of the fire that secures the gas tap bracket to the combustion box.

2. Undo the two screws retaining the controls to the combustion box.

3. Withdraw the complete controls assembly from the fire.

NOTE: On refitting the controls assembly, ensure that the tongue on the controls mounting plate engages in the corresponding slot in the combustion box lower panel.

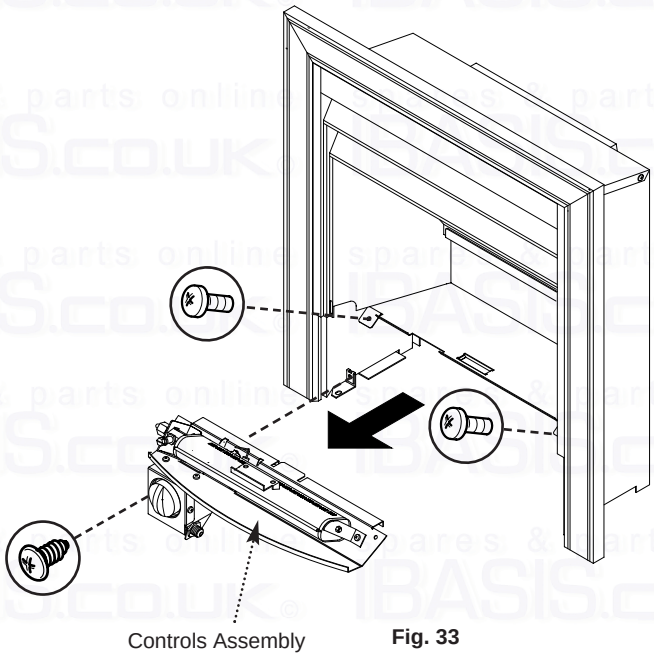

Fig. 33

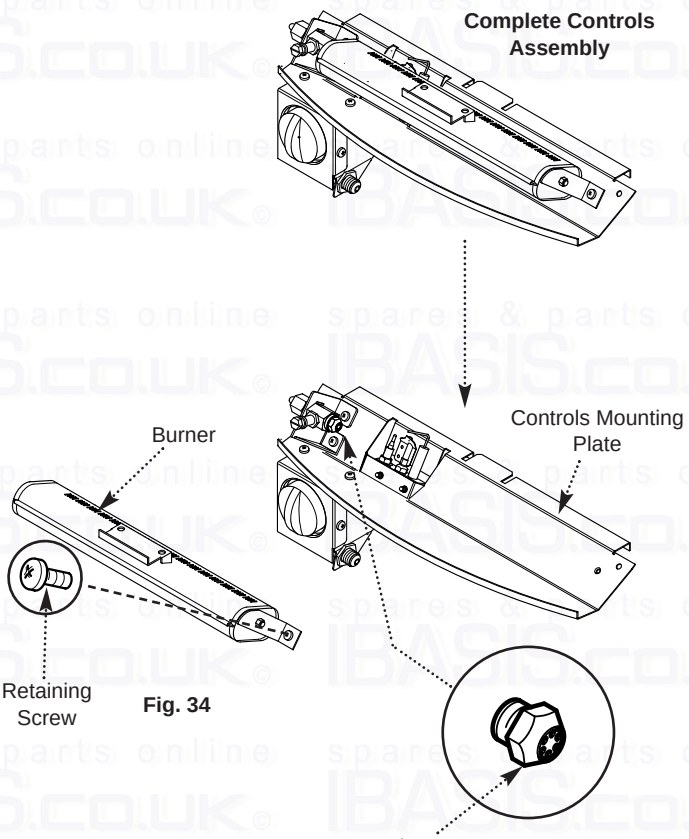

Fig. 34

Fig. 35

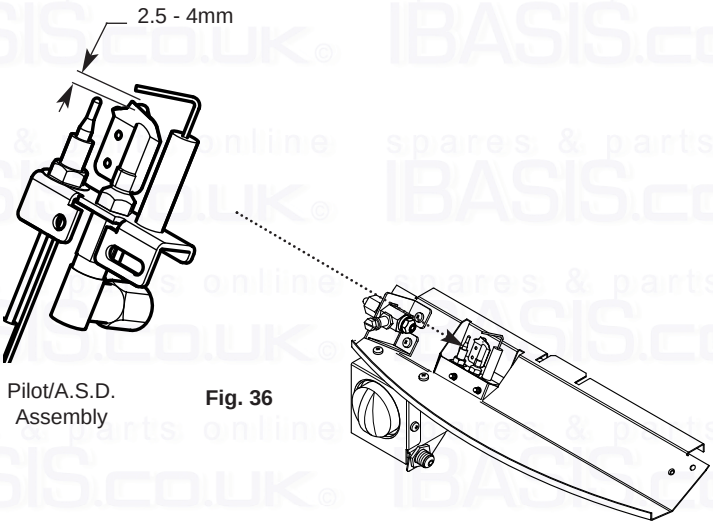

Fig. 36

8.4 Cleaning the Burner & Injectors

1. Undo the screw holding the burner to the controls mounting plate, and disengage the burner inlet from the injector (Fig. 34).

2. Using a soft brush, remove any dirt from the burner and ensure that the ports are free from obstruction (Fig. 34).

3. Using a spanner on both the adaptor barrel and fire injector, remove the injector from the barrel (Fig. 35).

4. Examine and clean the injector. Do not use any hard tools such as pins or wire. Refit the injector (Fig. 35).

8.5 Cleaning the Pilot/A.S.D. Assembly (Fig. 36)

NOTE: No attempt should be made to clean the device using any hard tools, including pins or wire.
WARNING: The pilot/A.S.D. assembly must not be adjusted in any way.

1. The A.S.D. must not be altered so that it will not operate or be bypassed in any way.

2. Ensure that the pilot burner aeration hole is free from lint, debris etc.

3. If necessary clean the electrode and target, and check that the spark gap is 2.5 - 4.0mm.

4. The thermocouple cannot be changed as an individual component. The complete assembly must be replaced in the event of one or other component failure(s).

5. Only use a Genuine Baxi Spare Part.

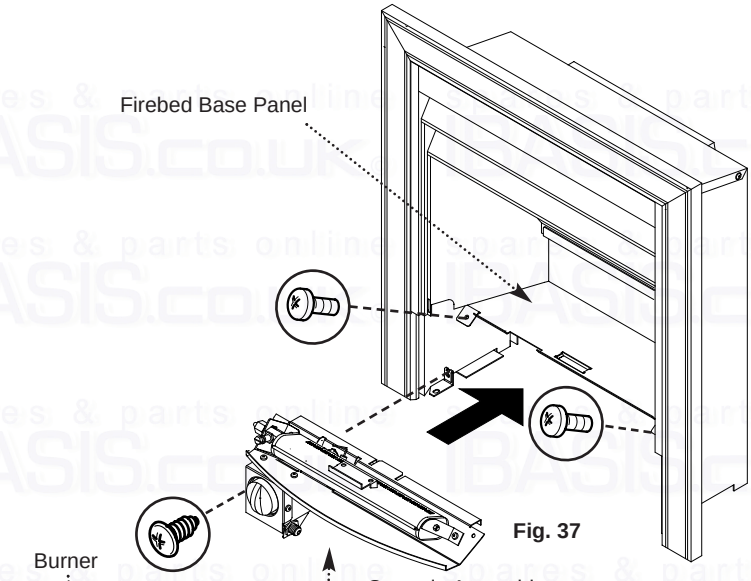

Fig. 37

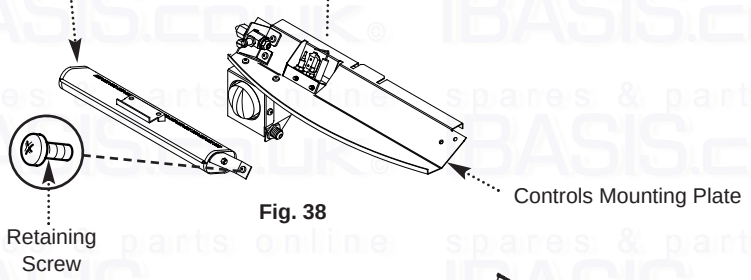

Fig. 38

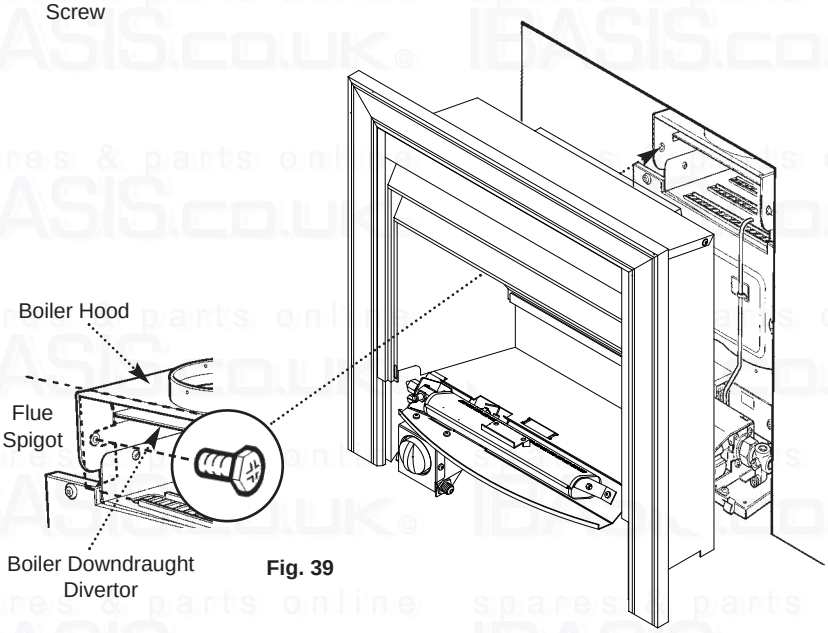

Fig. 39

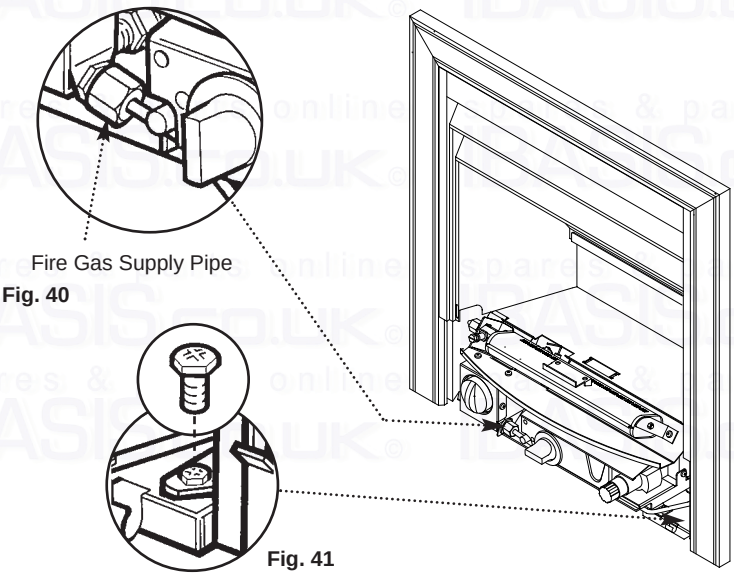

Fig. 40

Fig. 41

8.6 Cleaning the Combustion Box & Coals

1. Remove any deposits from the firebed base panel (Fig. 37).

2. If necessary the coals can be cleaned with a very soft brush, and can be retouched using the black stain supplied with the fire.

3. Refit the burner to the controls mounting plate and replace the controls assembly in the combustion box (Fig. 38).

8.7 Replacing the Fire

1. Once the boiler has been serviced, the fire can be replaced. Refer to the boiler installation and servicing instructions.

2. Slide the fire combustion box into position ensuring that the flue spigot fits into the boiler downdraught divertor. Fit and tighten the two screws inside the flue spigot (Fig. 39) and replace the two screws into the boiler base tray (Fig. 41).

3. Reconnect the gas supply and test for soundness (Fig. 40).

4. Replace all the loose coals, side cheeks, rear and front coals as described in “Arranging the Coals”. Refit the fender assembly.

spares & parts online IBASIS.CO.UK

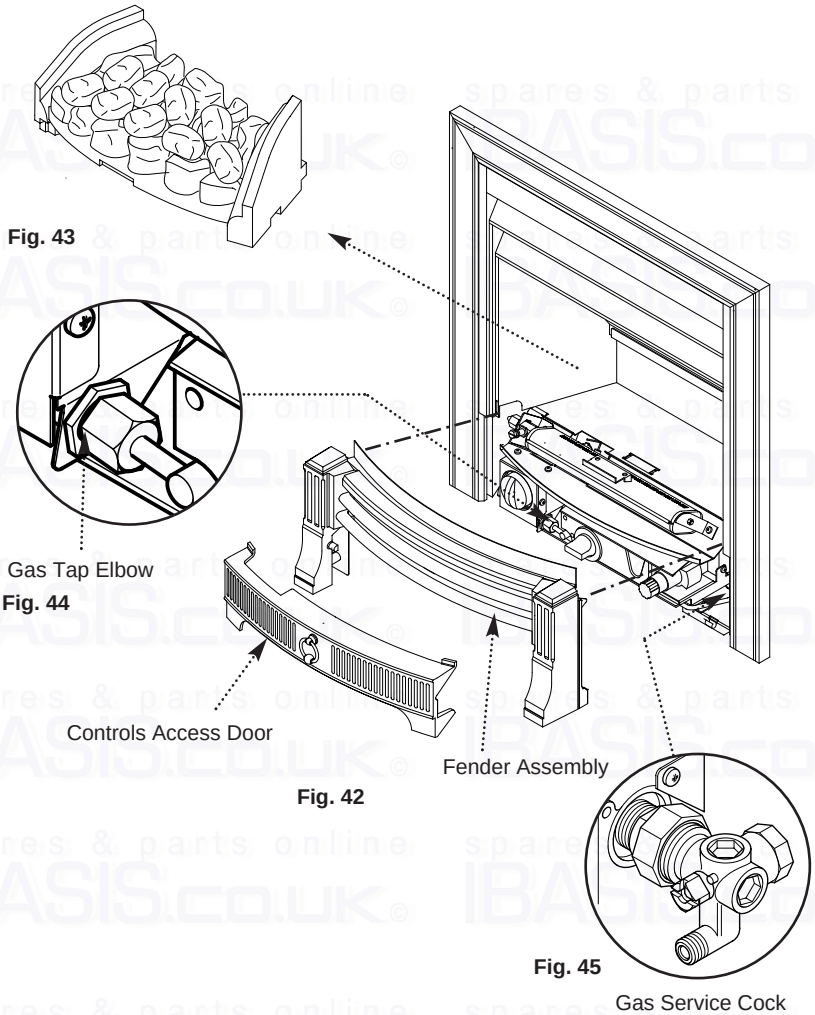

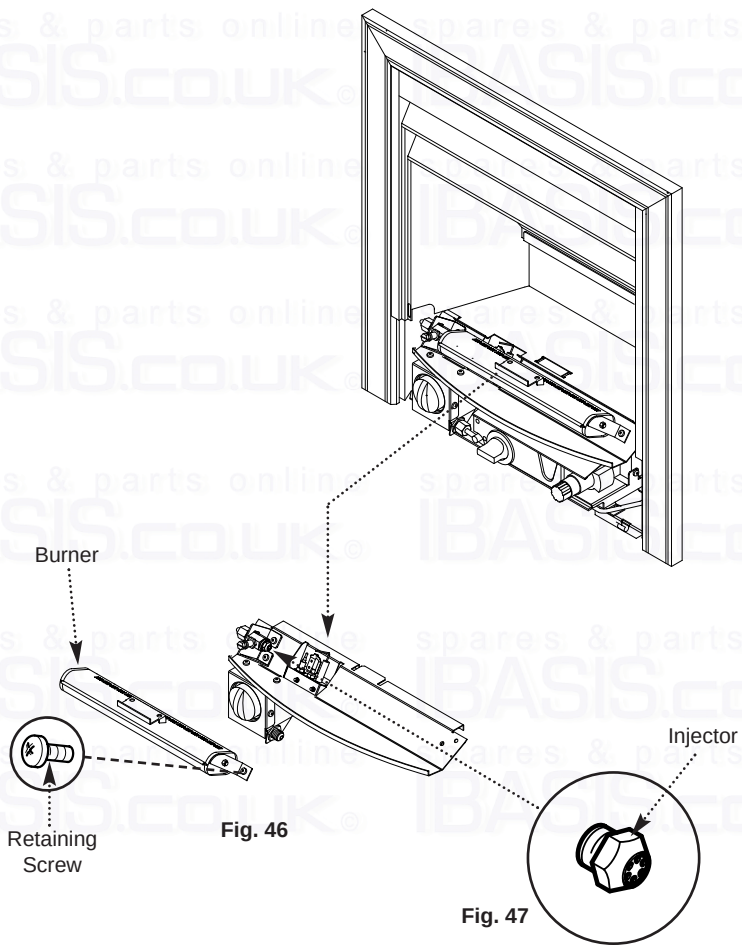

9.0 Changing Components

9.1 Changing Components

WARNING: Isolate the gas and electricity supplies to the boiler and fire unit before changing any components.

1. Lift the controls access door away from the fender assembly (Fig. 42).

2. Turn off the gas supply at the service cock (Fig. 45).

3. Carefully remove all the loose coals, side cheeks, rear and front coals (Fig. 43).

CAUTION: The coals are extremely fragile and must be handled accordingly. Gloves should be worn and any inhalation of the dust should be avoided. Keep the coals away from children at all times. Never use coals other than those originally supplied or Genuine Baxi Spare Parts. Never put additional coals on the fire. Please read section 1.3 Important Information.

4. Lift the fender assembly to disengage the hooks and remove it (Fig. 42).

6. Disconnect the gas supply to the fire at the gas tap elbow connection (Fig. 44).

NOTE: After changing any components carry out checks for gas soundness.

9.2 Burner and Injector

1. Undo the screw holding the burner to the controls mounting plate, and disengage the burner inlet from the injector (Fig. 46).

2. Fit the new burner in reverse order.

To change the injector remove the burner as described above.

3. Using a spanner on both the adaptor barrel and fire injector, remove the injector from the barrel (Fig. 47).

4. Fit the new injector.

9.3 Pilot/A.S.D. Assembly

1. Undo the three retaining screws and remove the controls assembly from the fire combustion box (Fig. 48).

NOTE: On refitting the controls assembly, ensure that the tongue on the controls mounting plate engages in the corresponding slot in the combustion box lower panel.

NOTE: The thermocouple cannot be changed as an individual component. The complete assembly must be replaced in the event of one or other component failure(s).

2. Disconnect the electrode lead from the electrode (Fig. 49).

3. Undo the thermocouple nut from the base of the gas tap and disconnect the pilot feed pipe from the tap body and pilot/A.S.D. assembly (Figs. 49 & 50).

4. Undo the two screws holding the pilot/A.S.D. assembly to the controls mounting plate and remove (Fig. 49).

5. Shape the thermocouple of the replacement pilot/A.S.D. assembly in a similar manner to the original and fit in reverse order.

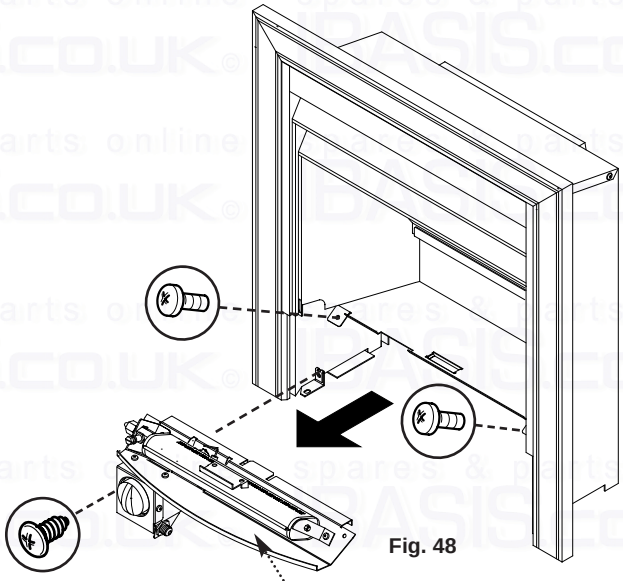

Fig. 48

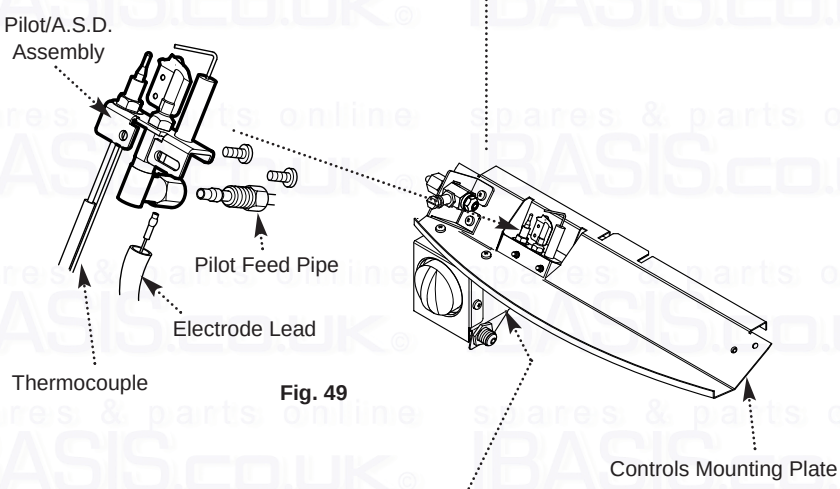

Fig. 49

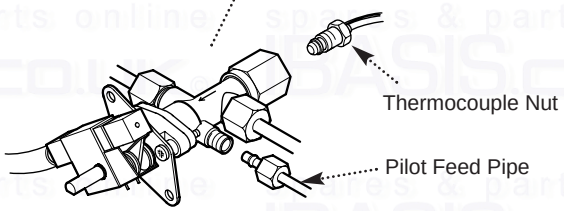

Fig. 50

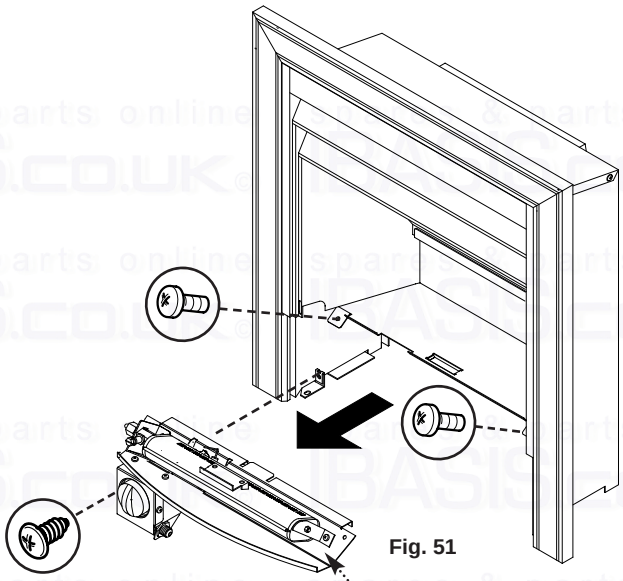

Fig. 51

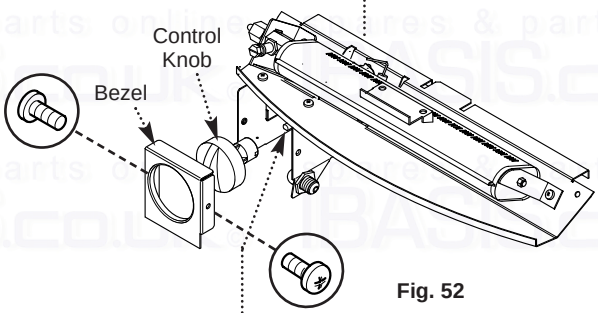

Fig. 52

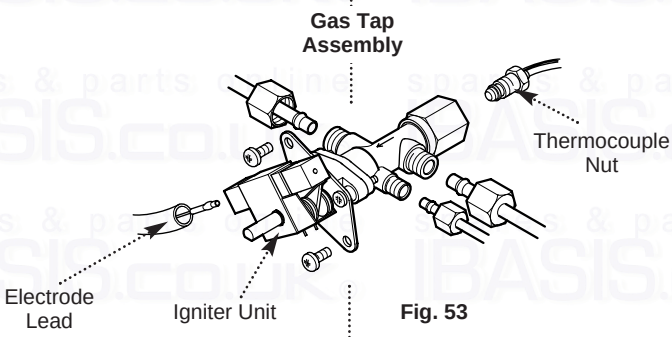

Fig. 53

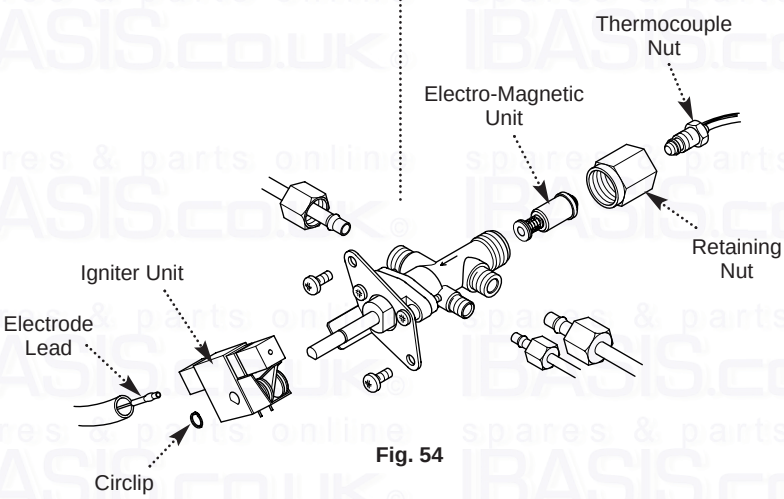

Fig. 54

9.0 Changing Components

9.4 Gas Tap

1. Undo the three retaining screws and remove the controls assembly from the fire combustion box (Fig. 51).

2. Undo the two screws holding the bezel to the gas tap bracket. Remove the bezel and control knob (Fig. 52).

3. Undo the thermocouple nut from the base of the gas tap, and disconnect the three gas pipes from the tap body (Fig. 53).

4. Disconnect the electrode lead from the igniter unit (Fig. 53).

5. Undo the two screws holding the gas tap to its' bracket. Remove the tap, slackening the gas pipes at their other connections if necessary (Fig. 53).

6. Fit the new tap in reverse order.

9.5 Igniter Unit (Fig. 54)

1. Remove the gas tap as described above.

2. Prize the circlip off the tap control shaft. Draw the igniter unit off the shaft and replace with the new one.

3. Fit the new circlip.

9.6 Electro-Magnetic Unit (Fig. 54)

1. Undo the three retaining screws and remove the controls assembly from the fire combustion box (Fig. 51).

2. Undo the thermocouple nut from the gas tap.

3. Undo the electro-magnetic unit retaining nut and withdraw the unit.

4.Fit the new unit and replace the nut.

After changing components replace all the coals, side cheeks, back piece and underbed as described in "Arranging the Coals".

CAUTION: The coals are extremely fragile and must be handled accordingly. Gloves should be worn and any inhalation of the dust should be avoided. Keep the coals away from children at all times. Never use coals other than those originally supplied or Genuine Baxi Spare Parts. Never put additional coals on the fire.

Fault Finding

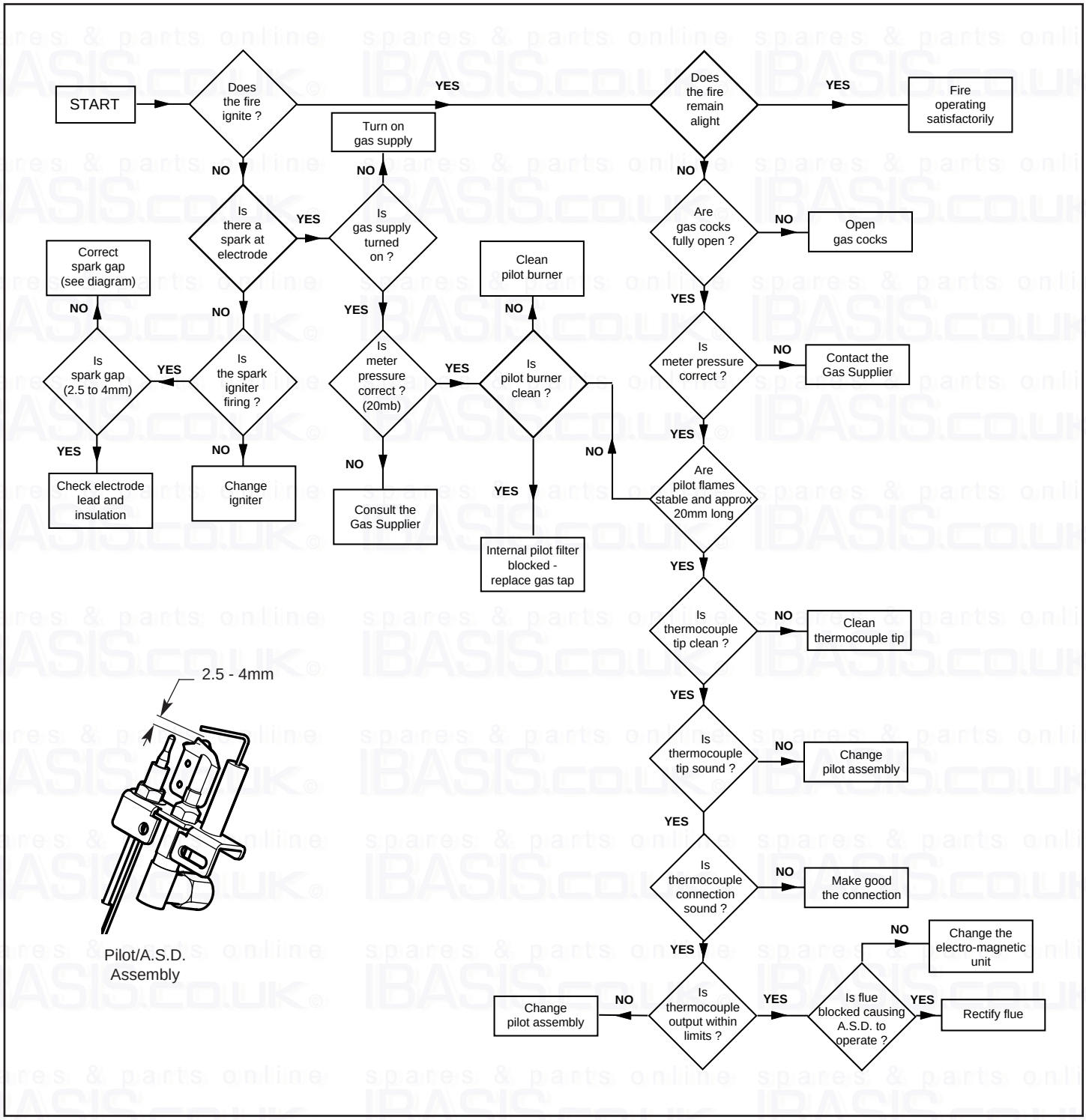

10.0 Short parts list

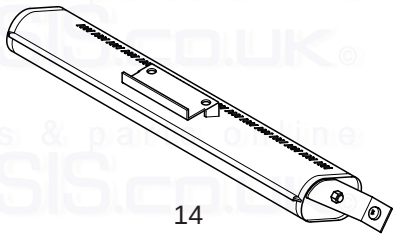
14

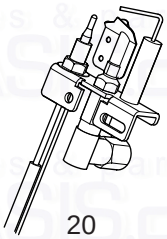
20

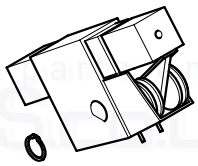
10

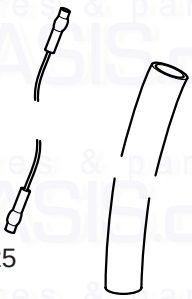
25

26

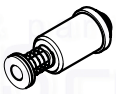
11

23

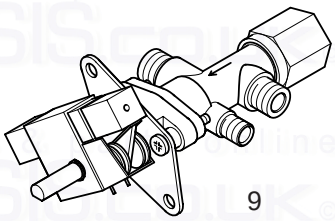
9

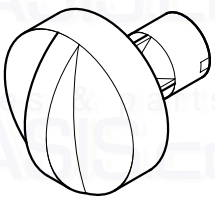
13

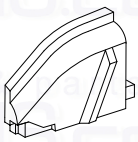
32

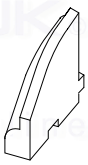

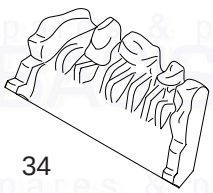
34

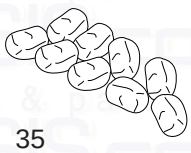
35

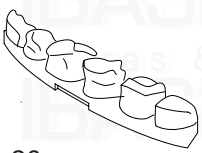
36

Short Parts List

Key No.	G.C. No.	Description	Manufacturers Part No.
9	E25 260	Gas Tap/FFD Assy	244950
10	E01 353	Spark Generator	239289
11	E01 617	Electro Magnetic Unit	239413
13	156 347	Knob Control	236295
14	E60 865	Burner Assy	247238
20	379 914	Oxypilot SIT OP 9402	238087
23	E06 212	Injector Multi-hole Steromatic F15	243038
25	378 924	Electrode Lead	236493
26	E01 367	Sleeve-Electrode	227051
32	E65 281	Side Cheeks	248555
34	E60 875	Rear Coal	247607
35	E59 197	Coals Loose Pack of 9	247327
36	E60 876	Front Coal	247608

spares & parts online IBASIS.CO.UK

Baxi UK Limited manufacture a comprehensive range of products for the domestic heating market

Gas Central Heating Boilers (Wall, Floor and Fireside models).

Independent Gas Fires.

Renewal Firefronts.

Gas Wall Heaters.

Solid Fuel Fires.

If you require information on any of these products, please write to the Sales Department.

Comp Nº 247612 - Iss 3 - 9/01

spares & parts online IBASIS.CO.UK

After Sales Service
08706 096 096

Technical Enquiries
08706 049 049

BAXI

Baxi UK Limited
Brownedge Road
Bamber Bridge Preston
Lancashire
PR5 6SN
www.baxi.com