Please leave these instructions with the User

Baxi Bermuda RG3

Fireside Gas Central Heating Unit

Comp N°. 237641 - Iss 4 – 5/00

Installation and Servicing Instructions

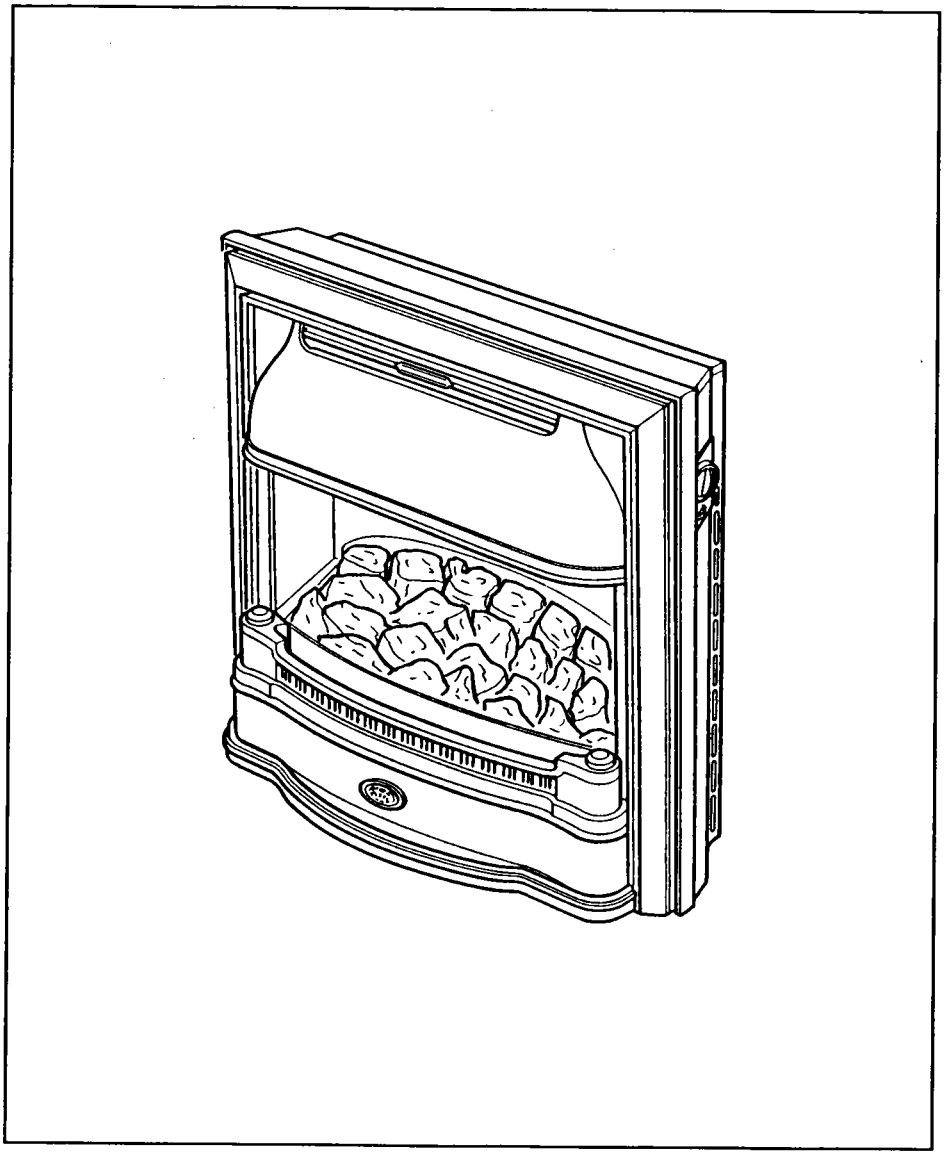

BAXI

spares & parts online IBASIS.CO.UK

Natural Gas

Baxi Bermuda RG3
G.C.No 37 077 64

For use with the following boilers:
Bermuda 45/4 M
G.C.No 44 077 71
Bermuda 45/4 E
G.C.No 44 077 73
Bermuda 57/4 M
G.C.No 44 077 72
Bermuda 57/4 E
G.C.No 44 077 74

Renewal

Baxi Bermuda RG3 Renewal
G.C.No 37 075 06A

For use with the following boilers:
Bermuda 401
G.C.No 44 077 49
Bermuda 552
G.C.No 44 077 50
Bermuda 45/3 M
G.C.No 44 077 61
Bermuda 45/3 E
G.C.No 44 077 60
Bermuda 57/3 M
G.C.No 44 077 63
Bermuda 57/3 E
G.C.No 44 077 62
Bermuda 45/4 M
G.C.No 44 077 71
Bermuda 45/4 E
G.C.No 44 077 73
Bermuda 57/4 M
G.C.No 44 077 72
Bermuda 57/4 E
G.C.No 44 077 74

Baxi UK Limited is one of the leading manufacturers of domestic heating products in the UK..

Our first priority is to give a high quality service to our customers. Quality is built into every Baxi product -products which fulfil the demands and needs of customers, offering choice, efficiency and reliability.

To keep ahead of changing trends, we have made a commitment to develop new ideas using the latest technology - with the aim of continuing to make the products that customers want to buy.

Baxi is also the largest manufacturing partnership in the country. Everyone who works at the company has a commitment to quality because, as shareholders, we know that satisfied customers mean continued success.

We hope you get a satisfactory service from Baxi. If not, please let us know.

For use in GB / IE only.

Baxi is a BS-EN ISO 9001
Accredited Company

spares & parts online IBASIS.CO.UK

CONTENTS – Page 3

Introduction PAGE 4

Technical Data PAGE 5

Site Requirements PAGE 6

Fireplace Opening
Hearth Mounting
Wall Fixing

Installation PAGE 7-13

Initial Preparation
Electrical Connections
Gas Supply
Fitting the Fire

Commissioning the Fire PAGE 14-16

Spillage Detection

Fitting the Outer Case PAGE 17

Annual Servicing PAGE 18-21

Cleaning the Burner and Injectors
Cleaning the Pilot Assembly

Changing Components PAGE 22-28

Initial Preparation
Light Bulbs
Glass Frame Assembly
Rope Seal
Coal Bed
Burner and Injectors
Pilot Assembly
Electro-Magnetic Unit
Light Switch and Micro-switch
Gas Control Tap and Pilot Filter
Electrode Lead, Resistor and Spark Generator

Short Parts List PAGE 29

Fault Finding PAGE 30-31

Renewal PAGE 32-33

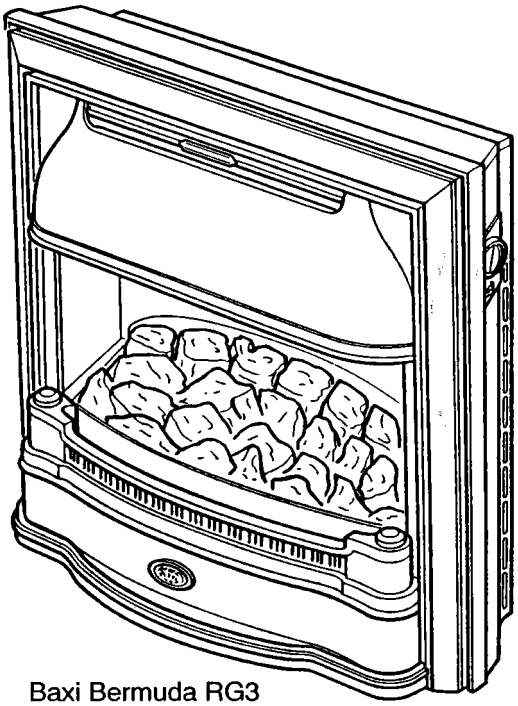

Baxi Bermuda RG3
G.C.N° 37 077 64

WARNING

The addition of anything that may interfere with the normal operation of the appliance (e.g. FLUE DAMPERS, ECONOMISERS etc.) without the express written permission of BAXI UK LIMITED could invalidate the appliance warranty and infringe the GAS SAFETY (Installation and Use) REGULATIONS.

NOTICE

DISCOLOURATION OF WALL SURFACES

Most heating appliances generate warm air convection currents and transfer heat to any wall surface against which they are situated.

Some soft furnishings (such as blown vinyl wallpapers) may not be suitable for use where they are subject to temperatures above normal room levels and the manufacturers advice should be sought before using this type of wall covering adjacent to any heating appliance.

The likelihood of wall staining from convected air currents will be increased in environments where high levels of cigarette smoke or other contaminants exist.

Description

The Baxi Bermuda RG3 (G.C. N° 37 077 64) is a combined gas fired central heating boiler and gas fire unit, designed for installation in a living room. The boiler and fire unit is designed to be used on Natural Gas only.

The heat input of the fire at maximum setting is 5.52kW (18,834 Btu/h) with an output of 3.47kW (11,865 Btu/h).

The fire is controlled by a knob which is positioned on the right hand side of the case. This knob has six positions giving a choice of four output settings.

Position ●	- OFF
Position ★🔥	- IGNITION/PILOT
Position 1	- LOW
Position 2	- MEDIUM
Position 3	- MEDIUM/HIGH
Position 4	- HIGH

When required, the artificial coal bed may be illuminated by concealed bulbs. The light effect is operated by a switch situated below the control knob. It may be used whether the fire is ON or OFF.

Installation

The appliance is suitable for installation only in G.B & I.E. and should be installed in accordance with the rules in force. For Ireland install in accordance with I.S. 813 “Installation of Gas Appliances”.
The installation must be carried out by a CORGI Registered Installer or other competent person and be in accordance with the relevant requirements of the GAS SAFETY (Installation and Use) REGULATIONS, the BUILDING REGULATIONS (Scotland) (Consolidation), the LOCAL BUILDING REGULATIONS, the CURRENT I.E.E. WIRING REGULATIONS and bye laws of the LOCAL WATER UNDERTAKING. It should also be in accordance with the relevant BRITISH STANDARD CODES OF PRACTICE.

Important Information

This product contains Refractory Ceramic Fibres (R.C.F.) which are man-made vitreous silicate fibres. Excessive exposure to these materials may cause temporary irritation to eyes, skin and respiratory tract. Care must be taken when handling these articles to ensure the release of dust or fibres is kept to a minimum.
To ensure that the release of fibres from these articles is kept to a minimum, during installation and servicing it is recommended that a H.E.P.A. filtered vacuum is used to remove any dust, soot or other debris accumulated in and around the appliance. This should be performed before and after working on the installation.
It is recommended that any replaced item(s) are not broken up but sealed within heavy duty polythene bags and clearly labelled “R.C.F. waste”. This is not classified as “hazardous waste” and may be disposed of at a tipping site licensed for the disposal of industrial waste. Protective clothing is not required when handling these articles but it is recommended that gloves are worn and the normal hygiene rules of not smoking, eating or drinking in the work area are followed and always wash hands before eating or drinking.

Bermuda RG3 (Natural Gas)

Heat Input	High	Med-High
kW	5.52	4.88
Btu/h	18,834	16,637

Heat Input	Med	Low
kW	3.72	2.00
Btu/h	12,693	6,824

Heat Output	High
kW	3.47
Btu/h	11,865

Setting Pressure	Cold
mbar	8.8 ± 0.5
in wg	3.52 ± 0.2

Thermocouple Output	9.4 - 13mv

Gas Connection	The gas supply is provided from the service cock on the boiler unit.
Electricity Supply	230V~50Hz External fuse - 3Amp Appliance Rating - 30 watt
Controls	Rotary gas tap with flame sensing device, electronic ignition and A.S.D. pilot.
Gas Rate (after 10 mins)	0.60m³/h (21.20ft³/h)
Weight (unpacked)	37.7 kg (82.9 lbs)

Outercase Dimensions		
	Height	733mm
	Width	765mm
	Depth	305mm

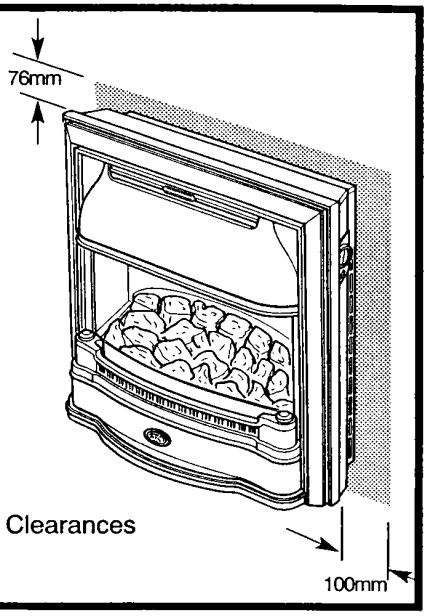

B.S. Codes of Practice

STANDARD	SCOPE
B.S. 6891	Gas Installation.
B.S. 5546	Installation of hot water supplies for domestic purposes.
B.S. 5871	Installation of gas fires, convectors and fire/back boilers.
B.S. 5440: Part 1	Flues.
B.S. 5440: Part 2	Air supply.
B.S. 6798	Installation of gas fired hot water boilers.
B.S. 5449: Part 1	Forced circulation hot water systems.

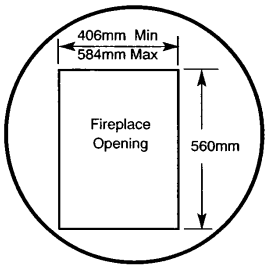

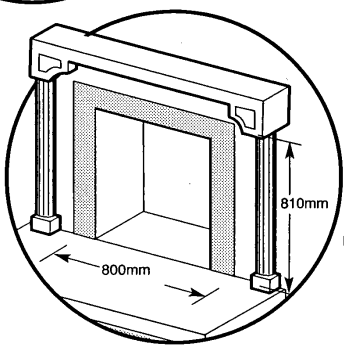

Fireplace Opening

The principal site requirements are determined by the boiler unit, but the following details are essential for the correct installation of the fire unit:

Fireplace Opening:	Height:	560mm (22in)
	Width:	406mm (l6in) min
		584mm (23in) max

NOTE: The wall behind the fire must be non-combustible.

If a fire surround is to be used, it must have a rating of l00ºC or higher (Any gaps between the wall and the surround must be sealed).

There must be a flat vertical surface, centrally fixed about the opening, measuring a minimum of 810mm (31 7/8 in) high by 800mm (31½ in) wide.

VENTILATION

Ventilation air supply to BS 5440 Part 2 is required. The permanent ventilation area size requirements are:-

RG3 & 45/4	69.71 cm^2 (10.8in^2)
RG3 & 57/4	90.32cm^2 (14in^2)

The permanent vent may be directly into the room containing the appliance. The vent may also be sited in another room provided an interconnecting vent is used. The vent must not be installed inside the builders opening. The vent should be sited following good practice for a habitable room.
We recommend the use of the Stadium BM720 'Black Hole' ventilator which is available from your local merchant.

HEARTH MOUNTING

If the fire unit is to be hearth mounted then the hearth must be of a non-combustible material at least 13mm (½ in) thick and measuring at least 305mm (12 in) deep by 800mm (31½in) wide and fitted centrally about the fireplace opening. The top surface of the hearth should be a minimum of 50mm (2in) above floor level and must be level with the base of the builders opening. **On no account should the fire unit be filled directly onto a combustible floor or carpet.**

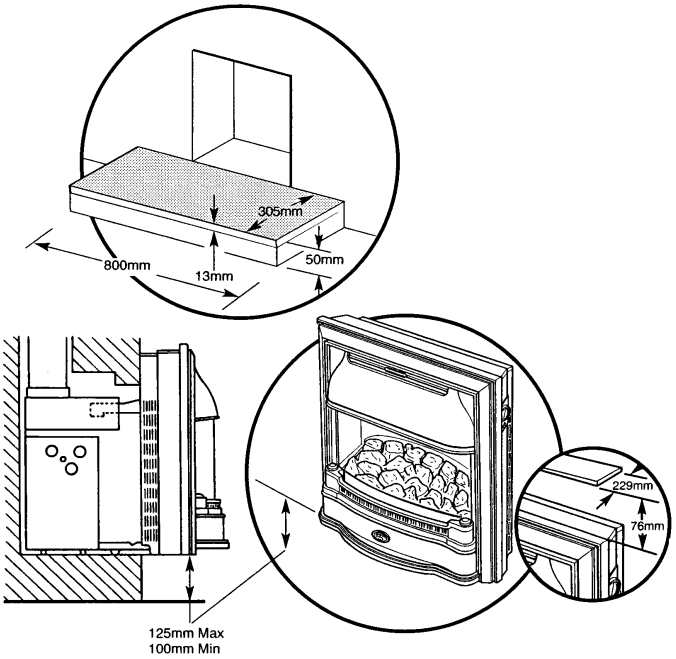

WALL FIXING

NOTE: Whilst the Bermuda RG3 is intended to be hearth mounted, it may also be fixed to a wall.

The bottom of the fire unit must be at least 100mm away from the floor, but not more than 125mm.

SHELF

A shelf may be fitted above the fire unit provided that it is at least 76mm (3in) above the fire canopy and not more than 229mm (9in) in depth. The area between the shelf and the top of the fire must be non-combustible.

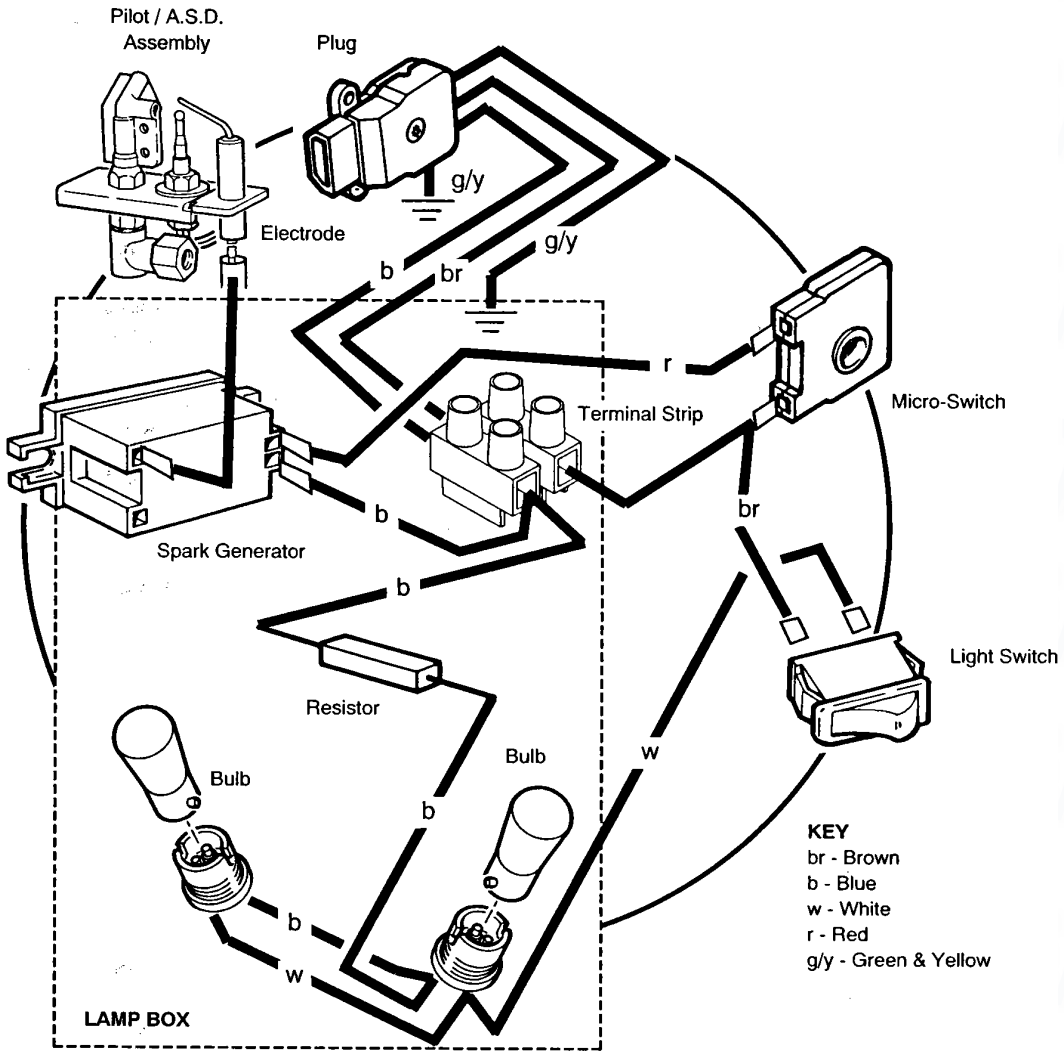

Initial Preparation

Unpack the fire unit.

Electrical Connections

THIS APPLIANCE MUST BE EARTHED

NOTE: The method of connection to the electricity supply must facilitate complete electrical isolation of the combined appliance (Fire and Boiler).

Connection may be made via a fused double pole isolator switch with a contact separation of at least 3mm (1/8 in) in all poles. The switch should be fused at a maximum of 3 amp and must serve the boiler or system controls only. Alternatively, the connection should be made via a standard 3-pin plug, fused at a maximum of 3 amp.

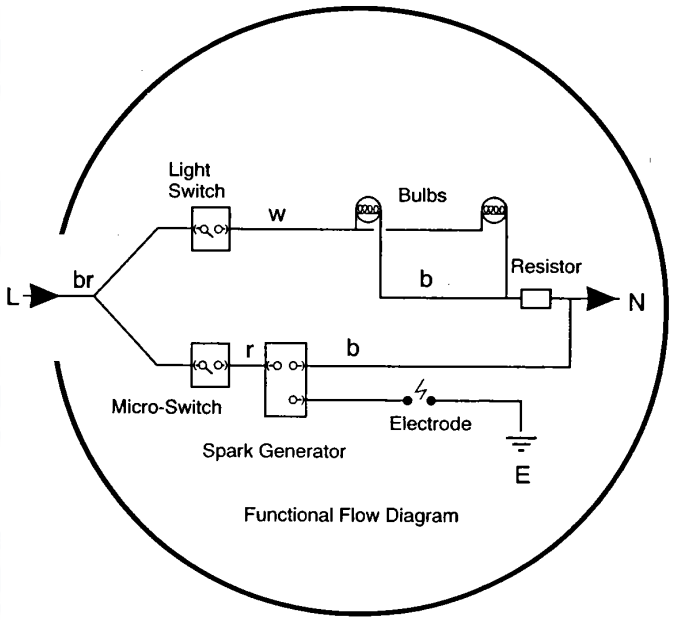

Any 4-core cable used for connection to the boiler unit must NOT be less than 0.75mm^2 (24 x 0.2mm)

PVC IEC 53 code 227 (heat resistant).

Electricity is supplied to the fire via the boiler unit.

The electrical connection between the fire and boiler unit is made by wiring the socket and cable assembly, that is supplied with the fire unit, into the socket on the boiler. Ideally, this connection should be made at the same time as the electrical connections to the boiler unit.

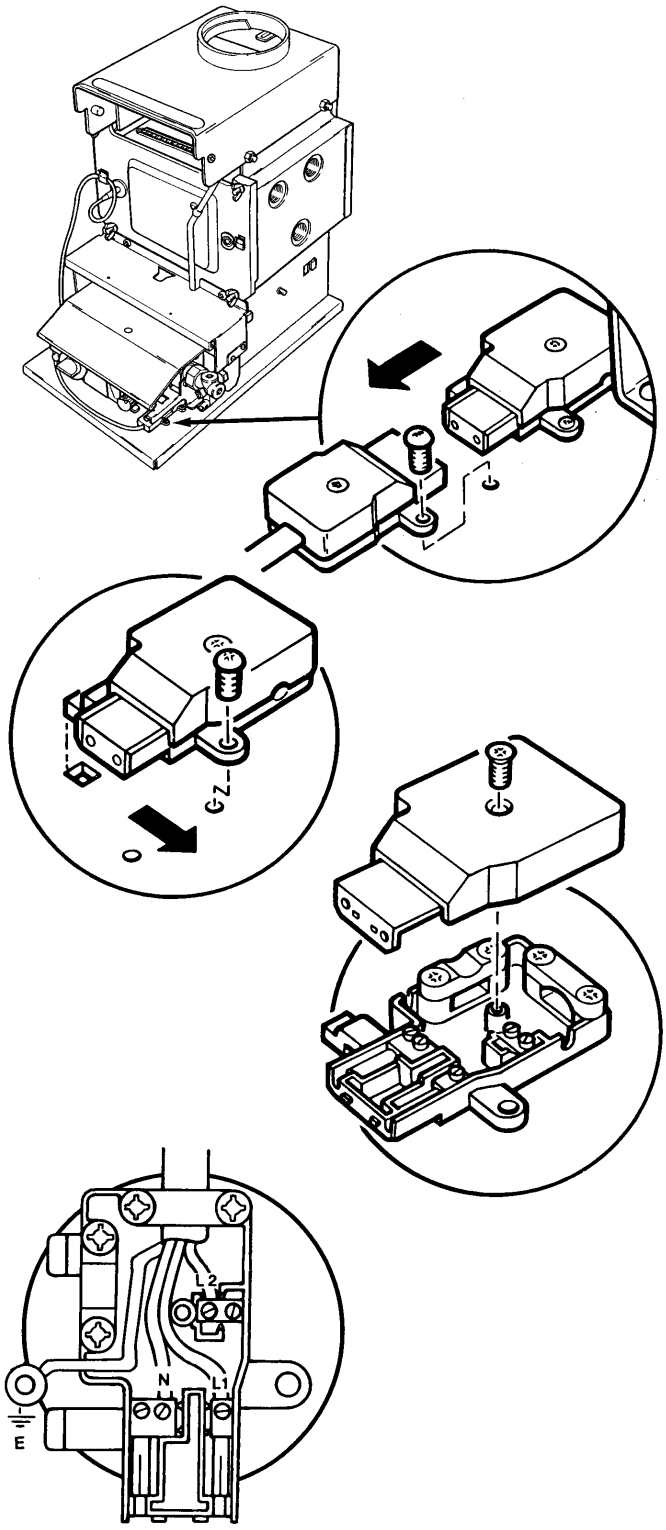

Manual Control Models

If the fire supply cable has not been fitted when wiring the boiler proceed as follows:-

CONNECTING ELECTRICAL SUPPLY TO THE BOILER

Connect the wiring to the boiler as follows:-Extract the screw that fixes the boiler controls connection plug to the socket on the boiler base tray and disconnect the plug. Retain the screw.

Extract the screw that fixes the socket to the boiler base tray and remove the socket by sliding it to the right. Retain the screw.

Extract the screw that fixes the cover to the socket housing and remove the cover to reveal the terminals and cable clamps. Retain the screw.

The switched live must be connected to the terminal marked “L1”

The permanent live must be connected to one of the terminals marked “L2”.

The neutral must be connected to one of the terminals marked “N”.

Route the green and yellow wire (EARTH) through the cut-out in the socket housing and connect it to the earth terminal on the boiler base tray.

NOTE:- The earth wire should be sufficiently long, so that if the supply cable is pulled on, the live and neutral wires will become taut before the earth wire.

Secure the cable in the socket with the cable clamp. For 3-core cable use the flat side of the cable clamp downwards and for 4-core cable use with the radius side of the cable clamp downwards.

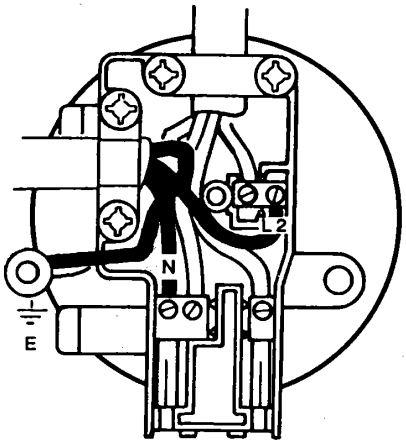

CONNECTING THE FIRE ELECTRICAL SUPPLY CABLE TO THE BOILER

If the boiler electrical connections have already been made, ensure that the electrical supply to the boiler is isolated. The fire should always be electrically connected as described below and must not be provided with an electrical connection that is independent from the boiler.

The wires from the socket and cable assembly, that are supplied with the fire unit, should be connected into the boiler electrical supply socket as follows

- Connect the blue wire (neutral) to the remaining terminal marked “N”.
- Connect the brown wire (permanent live) to the remaining terminal marked “L2”.
- Route the green and yellow wire (EARTH) through the cut-out in the socket housing and connect it to the earth terminal on the boiler base tray.

NOTE:- The earth wire should be sufficiently long, so that if the supply cable is pulled on, the live and neutral wires will become taut before the earth wire.

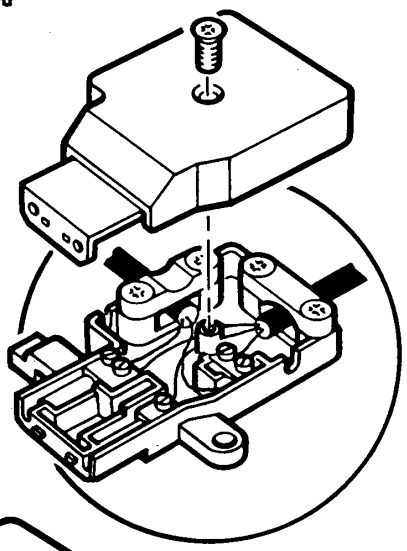

Using the cable clamp with the flat side downwards, secure the cable in the socket.

Refit the socket cover and fix it in place with. the screw.

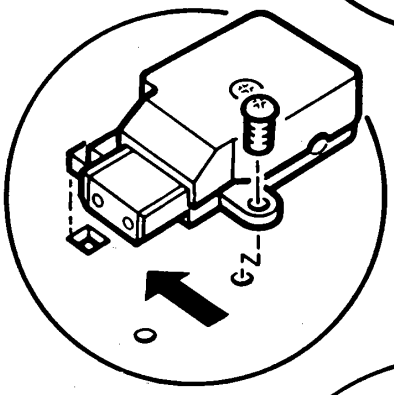

Refit the socket to the boiler base tray and secure in place with the securing screw.

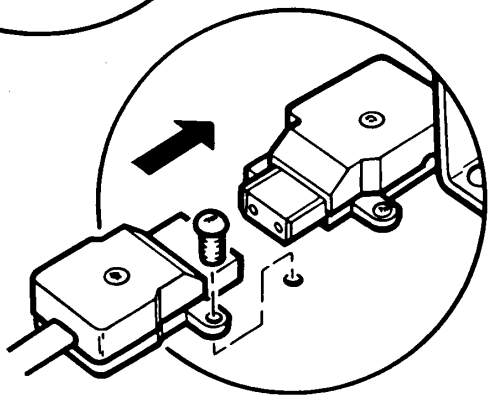

Reconnect the controls connection plug to the socket and secure it in place using the securing screw.

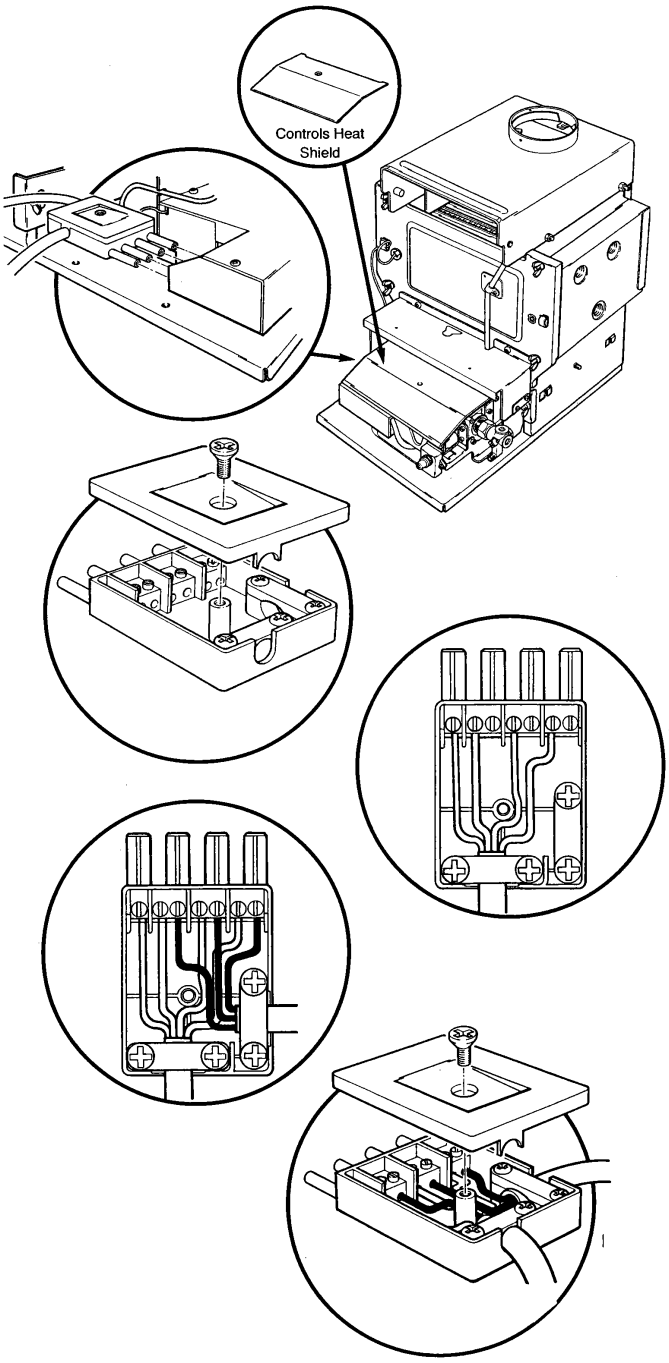

Electronic Controls Models

If the boiler electrical connections have already been made, ensure that the electrical supply to the boiler is isolated. The fire should always be electrically connected as described below and must not be provided with an electrical connection that is independent from the boiler.

Remove the controls heat shield from its retaining clips.

Remove the electrical inlet socket from the PCB at the rear left hand side of the control box.

Remove the socket cover and inlet cable clamp.

Connect the inlet supply cable(s) as indicated:-
Permanent live to L
Controls system switched live to SL
Control system neutral to N
Earth to ⏚

Remove the side cable clamp and connect the wire from the fire front kit as indicated:-
Brown (live) to L
Blue (neutral) to N
Green and Yellow (earth) to ⏚

Refit both cable clamps ensuring that the outer insulation is securely held and refit the socket cover.

Ensure that all cables are routed away from the boiler casing and hood.

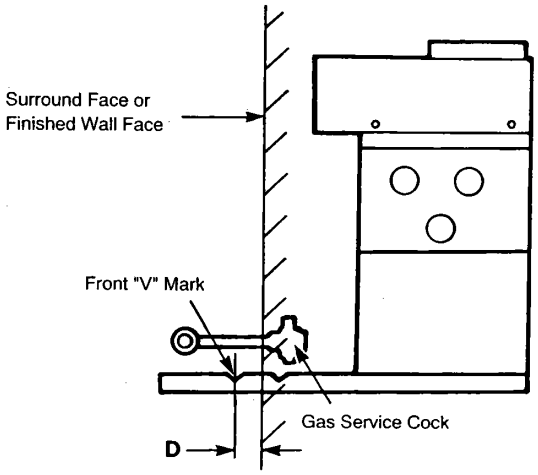

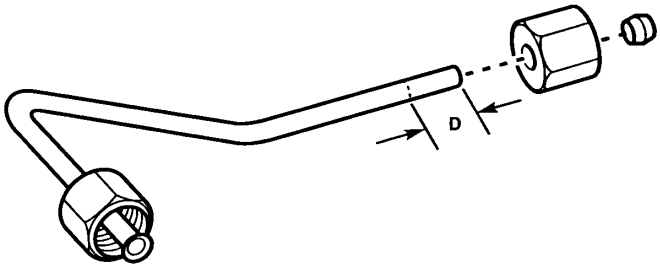

Gas Supply

The gas installation should be in accordance with BS 6891.

The gas supply to the fire unit is provided from the service cock on the boiler using the fire supply pipe contained in the kit.

The pipe has one flared end (for connection to the fire) and a plain end (for connection to the service cock).

It will be necessary to cut the fire supply pipe to length. The length will depend on the position of the boiler unit relative to the face of the wall or surround.

The following procedure will ensure that the pipe is cut to the correct length.

Measure the distance from the centre of the front ‘V’ mark on the boiler base tray to the face of the wall or surround. Let this distance be known as distance ‘A’.

Add 35mm to distance ‘A’, (ie: A + 35mm) to give a total distance ‘D’.

Mark off distance ‘D’ from the plain end of the supply pipe.

Cut away the unwanted piece of pipe, ensuring that the cut is square.

Remove burrs and clear the pipe of any swarf.

Two compression nuts and an olive are provided in the kit. Thread one nut over the fire supply pipe, as shown, then fix the plain end of the pipe to the service cock on the boiler using the olive and remaining nut. Ensure that the flared end of the pipe faces to the right and is parallel with the hearth or floor before fully tightening the nut and olive.

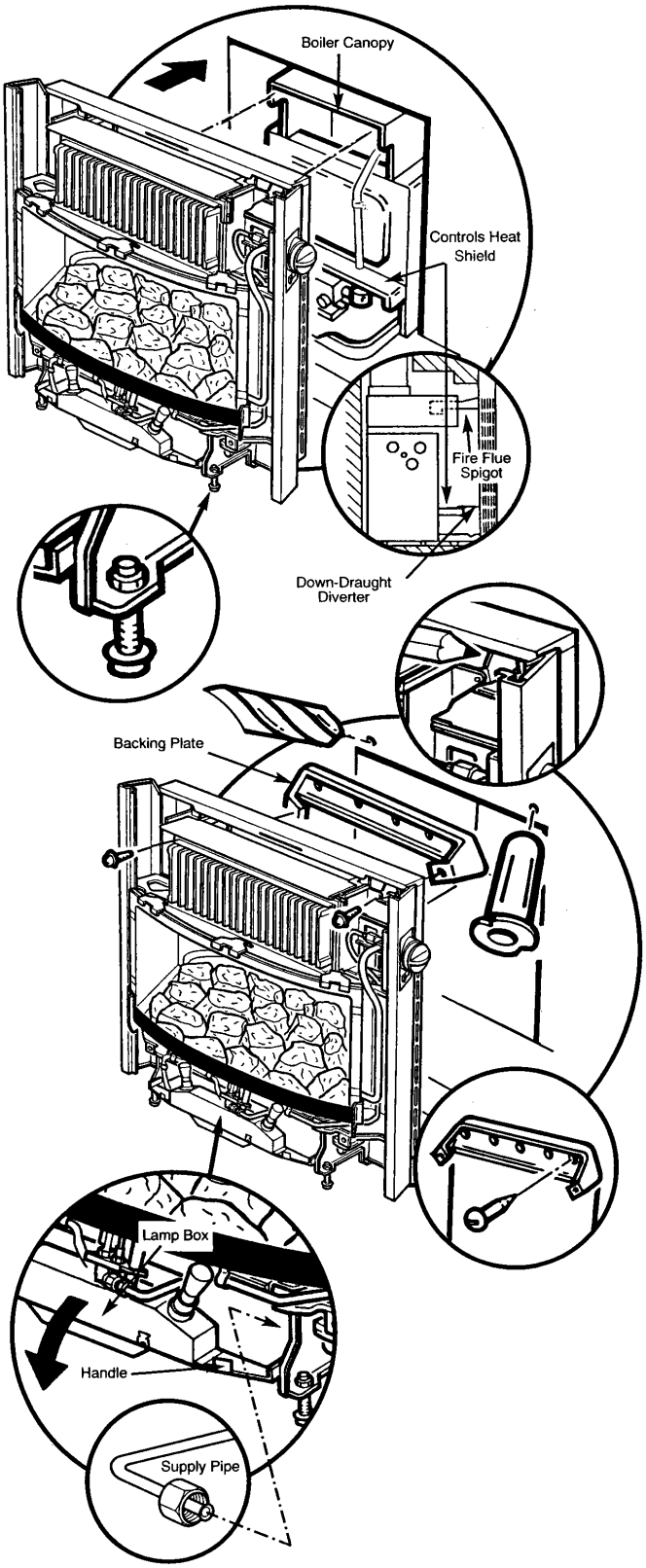

Fitting the Fire

HEARTH FIXING

Ensure that the space between the flue liner and the chimney has been sealed, as described in the flues section of the Boiler Instruction.

The backing plate that will be used to secure the fire to the wall is already fastened to the fire in readiness for marking out the screw fixing holes. It is located at the top back position of the fire unit.

The following procedure is to be followed when fitting the fire.

Locate the fire flue spigot into the boiler canopy and whilst ensuring that the down-draught diverter on the fire unit passes over the controls heat shield, push the fire backwards until the backing plate touches the surround or wall surface.

Level the fire by adjusting the front feet (check using a spirit level).

Mark the positions of two suitable fixing holes in the backing plate. **NOTE: Where possible the top corner fixing hole positions should be used, otherwise space the fixing holes as far apart as possible.**

Withdraw the fire unit and remove the backing plate from the chassis by unscrewing the two screws holding it in position. Take note of its orientation and retain the screws.

Drill the fixing holes in the surround or wall face to accept the wall plugs provided.

Fix the backing plate onto the wall using the screws provided.

Relocate the fire and push up against the backing plate. The fire is secured to the backing plate using the screws previously removed.

The lamp box, which is clipped at the top and hinged at the bottom is rotated forward to expose the boiler controls. Use the handles provided.

Connect the supply pipe to the fire inlet connection and tighten the flared joint.

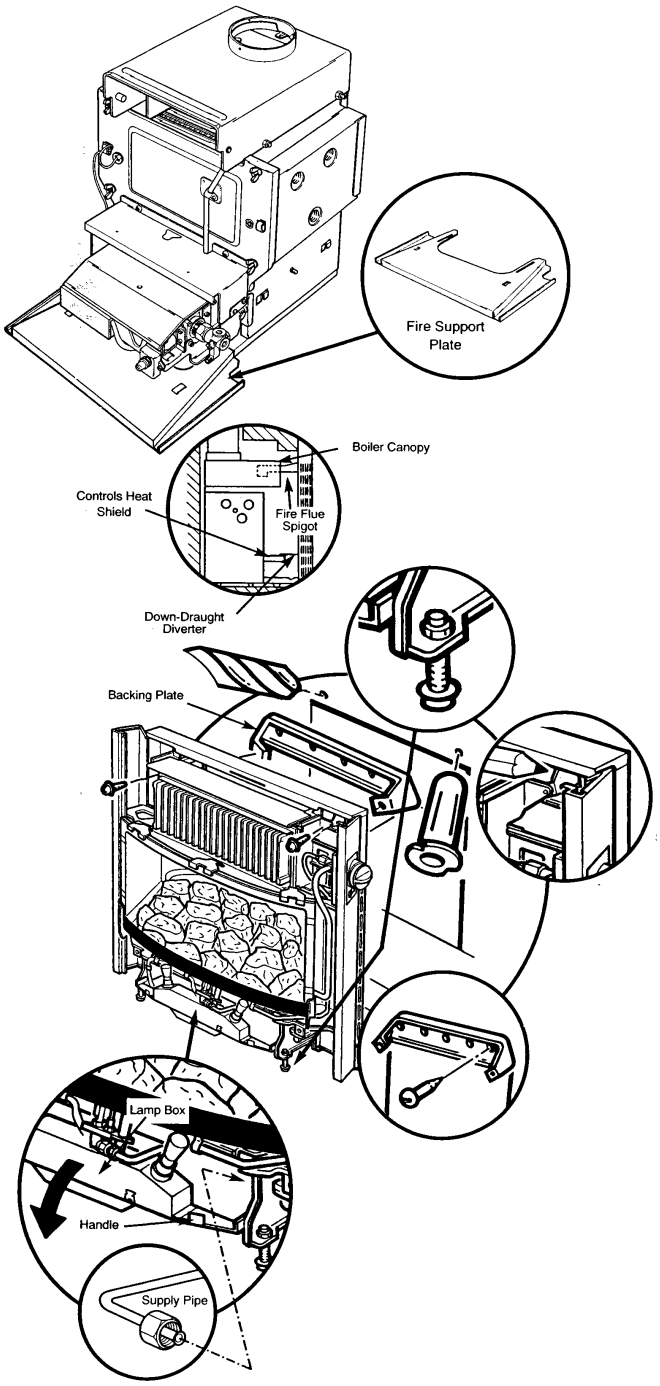

WALL FIXING

Ensure that the space between the flue liner and the chimney has been sealed, as described in the flues section of the Boiler Instruction. On electronic control boilers it will be necessary to remove the inlet plug from the controls.

Take the fire support plate from the fire unit packaging and loosely attach it to the boiler base protruding from the fireplace opening using the screws provided. Use the slots at each side.

Push the support plate backwards until it touches the surround or wall face and tighten the screws to lock it in position.

Locate the fire flue spigot into the boiler canopy and whilst ensuring that the down-draught diverter on the fire unit passes over the controls heat shield, push the fire backwards until the backing plate touches the surround or wall surface.

Level the fire by adjusting the front feet (check using a spirit level).

Mark the positions of two suitable fixing holes in the backing plate. **NOTE: Where possible the top corner fixing hole positions should be used, otherwise space the fixing holes as far apart as possible.**

Withdraw the fire unit and remove the backing plate from the chassis by unscrewing the two screws holding it in position. Take note of its orientation and retain the screws.

Drill the fixing holes in the surround or wall face to accept the wall plugs provided.

Fix the backing plate onto the wall using the screws provided.

Relocate the fire and push up against the backing plate. The fire is secured to the backing plate using the screws previously removed.

The lamp box, which is clipped at the top and hinged at the bottom is rotated forward to expose the boiler controls. Use the handles provided.

Connect the supply pipe to the fire inlet connection and tighten the flared joint.

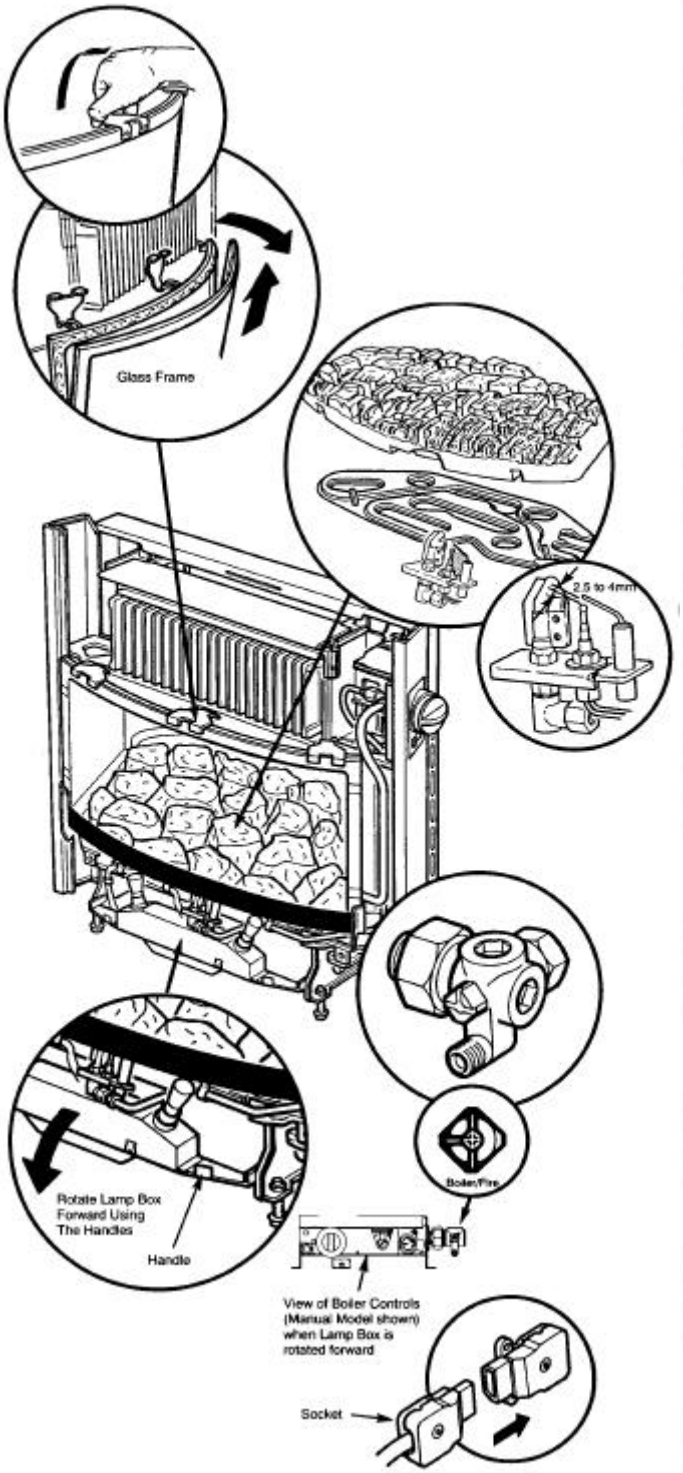

Three clips across the top of the glass frame secure it in position. When the clips are released, the glass frame assembly will lean outwards to rest on its bottom location positions, from which it can be lifted clear of the fire. The two outer clips should be released before the centre one. Release the clips by gripping centrally and pulling upwards.

Remove the packing piece that retains the coalbed and lift the coalbed clear of its location pegs.

CAUTION:- The coalbed is extremely fragile and must be handled accordingly. Gloves should be worn and any inhalation of the dust should be avoided. Keep the coals away from children at all times. Please read the Important Information section on page 4.

Check that the spark gap between the electrode and thermocouple is between 2.5 and 4mm.

Take the coalbed out of its plastic bag and replace it in position on the burner.

Replace the glass frame assembly by lowering it into its bottom locating positions and, whilst holding against the rope seal, engage the retaining clips. To engage the clips, locate the front of the clip over the top edge of the glass frame and push the top of the clip downwards. The centre clip should be replaced before the outer clips.

Turn on the mains gas and electricity supplies.

Turn the gas service cock to the fire and boiler ON position by turning fully anti-clockwise, then purge any air from the fire supply pipe.

Check for gas soundness from the gas service cock to the fire inlet position (BS 6891).

Connect the electricity supply to the fire by fixing the 3-pin socket that comes from the boiler into the plug provided on the fire unit. The plug is situated towards the left, in the space behind the lamp box.

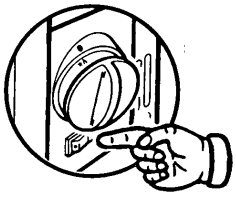

Switch on the bulbs. If the bulbs light, then switch off and proceed. If they do not light isolate the electricity supply and perform preliminary electrical system checks before proceeding, ie earth continuity, polarity, resistance to earth etc.

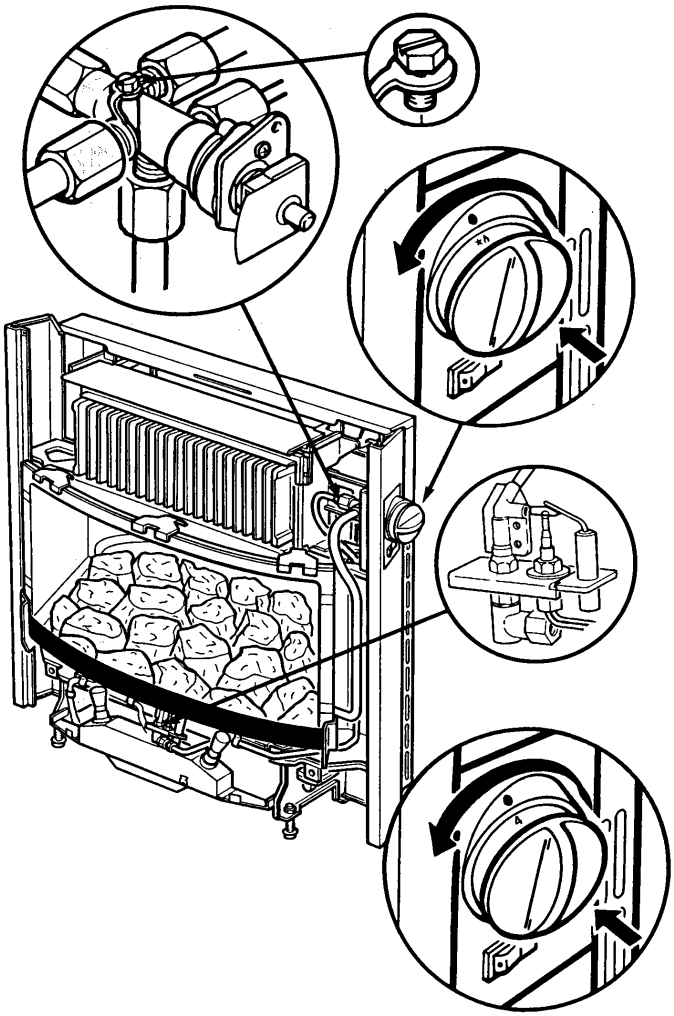

Release the pressure test point sealing screw from the gas control tap and connect a pressure gauge in position.

Push in the control knob, turn to the Ignition/Pilot position (★🔥) and hold in. Sparking will commence and the pilot will light. The pilot is visible at the front centre of the coalbed.

Continue to hold the control knob in for a further 15 seconds, then release. The sparking will stop and the pilot will remain alight.

The pilot has two flames, one to ignite the main burner and one to operate the flame supervision device. Both flames should be approximately 20mm long with a clean and stable appearance.

If the pilot does not remain alight, wait 2 minutes and repeat the process. If the pilot still fails to remain alight, refer to the fault finding chart.

Turn the control knob to position 4 and check the setting pressure. If this is not correct, check that all gas cocks are fully open and that the meter pressure is correct. No adjustment to the setting pressure is possible.

Turn the control knob to the OFF position (●). Disconnect the pressure gauge and replace the pressure test point sealing screw, ensuring a gas tight seal.

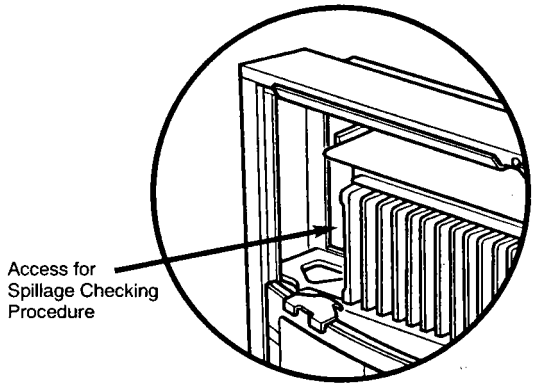

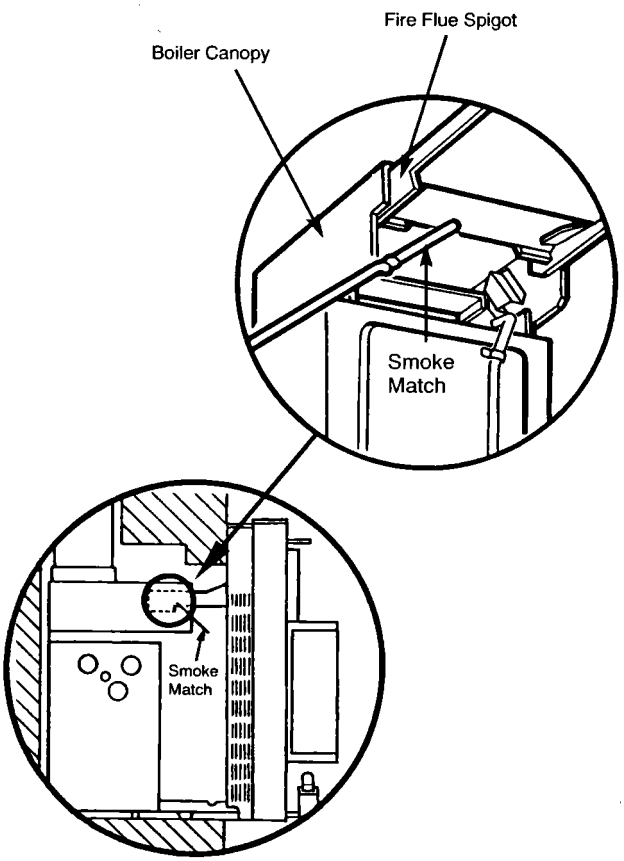

CHECKING FOR SPILLAGE

CAUTION - Whilst checking for spillage care must be taken to avoid touching hot panels.

Ensure that all doors and windows are closed.

IMPORTANT NOTE: If there is a ceiling or extractor fan in the room or adjoining room then the spillage test must be performed with the fan turned on and any interconnecting doors between the fan and the appliance left open.

There are two stages of appliance operation for which spillage must be checked by following “the spillage checking procedure” shown below.

STAGE 1 - Operate the fire on maximum for five minutes and check for spillage. If spillage is evident then the fire is operated for a further 10 minutes and re-checked. If spillage is still evident then the cause should be ascertained and rectified before continuing with commissioning.

STAGE 2 - Following a satisfactory result at stage 1, the fire is left on and the boiler is operated for 5 minutes before checking for spillage again. If spillage is evident then the cause should be ascertained and rectified before continuing with commissioning.

If the appliance cannot be commissioned then it should be isolated until the problem is resolved.

THE SPILLAGE CHECKING PROCEDURE

Checking for spillage is only possible from the left hand side of the appliance. A lighted smoke match with extension is inserted into the boiler canopy and positioned just below but not touching the fire flue spigot. With the aid of a torch the trail of smoke from the match is observed. If the smoke is not being drawn up into the flue then spillage of combustion products is indicated.

POSSIBLE CAUSES OF SPILLAGE

The smoke match may have been positioned incorrectly, resulting in the smoke being picked up by hot convected air currents.

The builders opening or flue installation may be unsound.

Inadequate ventilation.

Down draughts may be present.

The flue may be blocked.

FITTING THE OUTER CASE – Page 17

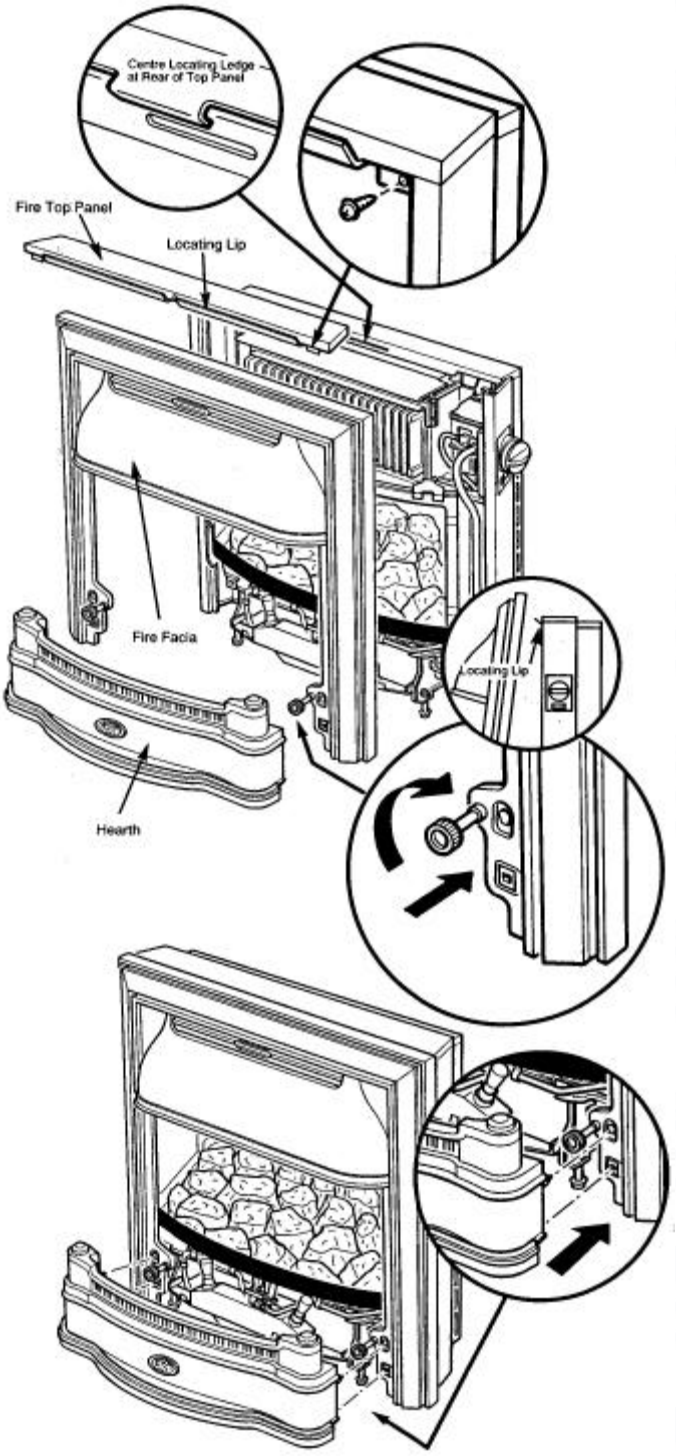

First turn off the fire and allow it to cool down.

There are 3 outer case components which are to be fitted as follows:-

FIRE TOP PANEL
Hold the panel on either side with the screw fixing holes towards the front.

Angle the panel backwards and by guiding the centre locating ledge at the rear of the panel, into the slot provided on the fire, locate the panel onto the fire.

The front of the panel should now be brought down so that the screw fixing holes are forward of the captive nuts provided on the fire. Secure the panel using the two ½ in self tapping screws provided.

FIRE FACIA
Locate the facia on the lip at the top of the fire

Secure the two fasteners at the bottom of the facia by pushing in and turning clockwise.

HEARTH
Guide the hearth locating pins into the holes in the facia.

Push the bottom of the hearth inwards to ensure the clips on either side are engaged.

These instructions and the users instructions should be handed over to the customer. At the same time the customer should be shown how to operate the fire safely and efficiently.

The need for Annual Servicing should be pointed out and returning of the guarantee card advised.

ANNUAL SERVICING – Page 18

For reasons of safety and economy it is important to service both the fire and boiler unit annually. Before servicing please read the Important Information section on page 4.

IMPORTANT: It is possible that some soot may be deposited on the coals after use. This is acceptable providing it is not allowed to accumulate.

CAUTION:- The coalbed is extremely fragile and must be handled accordingly. Gloves should be worn and any inhalation of the dust should be avoided. Keep the coals away from children at all times.

PREPARATION

In order to service the boiler unit, the fire must be disconnected and removed. Once disconnected, the fire unit may be serviced separate from the boiler.

WARNING:- ISOLATE THE GAS AND ELECTRICITY SUPPLIES, INCLUDING THE PERMANENT LIVE, TO THE BOILER AND FIRE UNIT BEFORE SERVICING.

Remove the Outer Case Components as follows:-

Ensure the fire is cold.

Remove the fire hearth by grasping it on either side at the bottom and pulling towards you. This will release the clips and allow the hearth to be lifted away by drawing it forward.

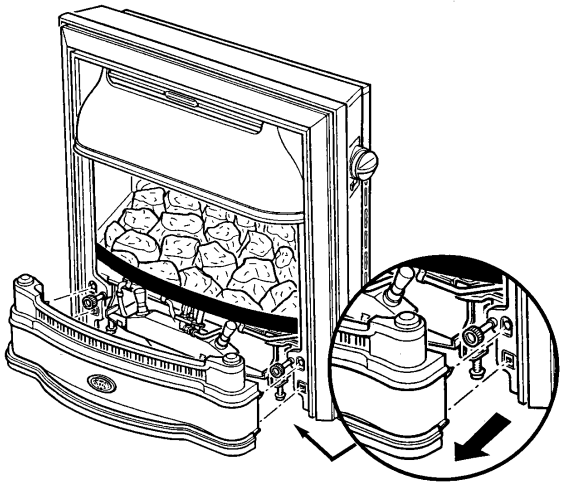

Release the fasteners at the bottom of the facia panel by turning them anti-clockwise.

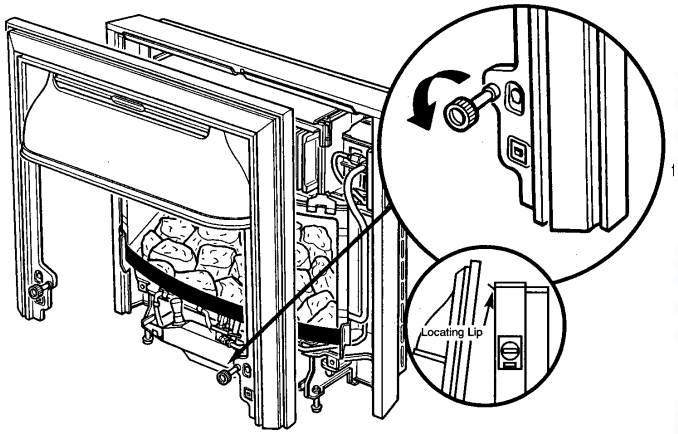

The facia panel which is supported on a lip at the top of the fire can now be removed. Grasp the facia on either side and bring slightly forward before lifting clear of the lip.

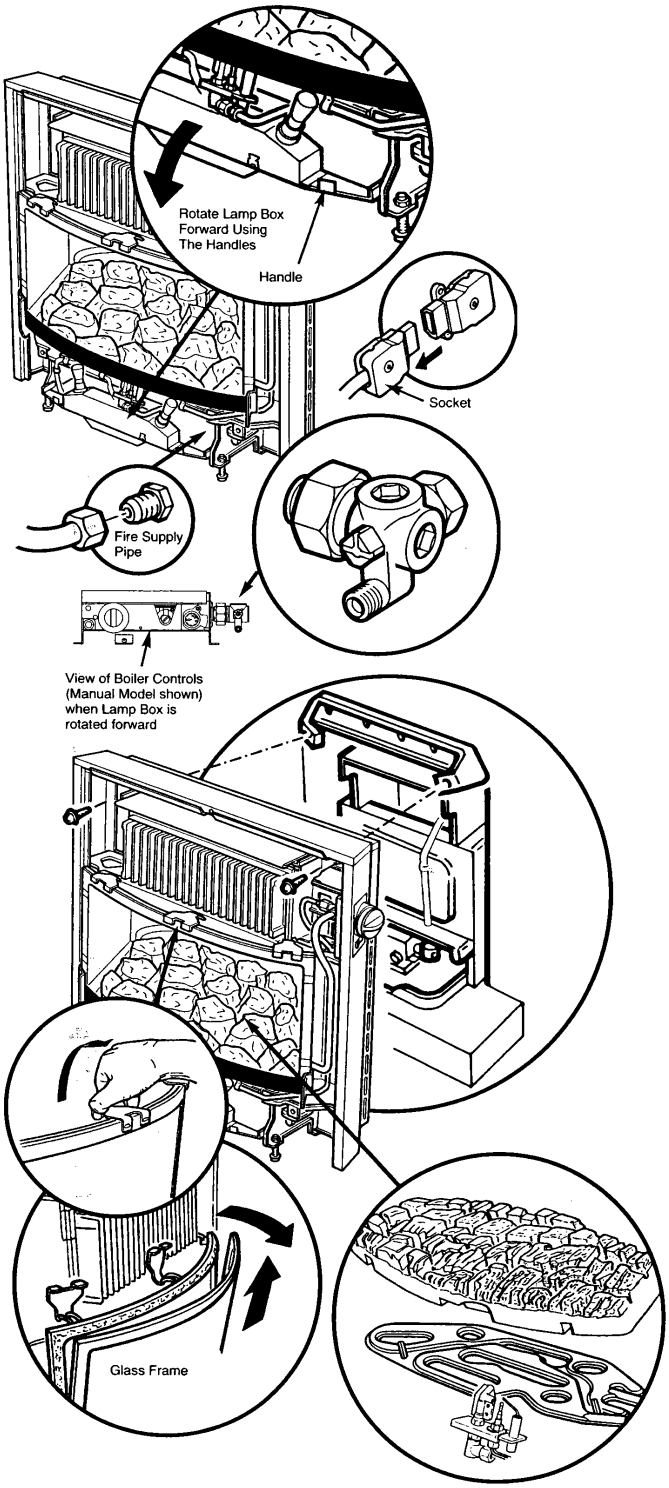

Remove the Fire chassis as follows:-

The lamp box, which is clipped at the top and hinged at the bottom is rotated forward to expose the boiler controls. Use the handles provided.

Electricity is supplied to the fire by means of a 3 pin socket from the boiler. The plug is situated towards the left in the space behind the lamp box. Disconnect the socket from the plug on the fire and lay it on the boiler tray.

Turn off the gas service cock on the boiler by turning fully clockwise.

Disconnect the fire supply pipe from the fire inlet.

Clip the lamp box back into position.

If required, the top panel on the fire can be removed, to gain better access to the lifting points. To do this, remove the two fixing screws securing it and lift the panel up at the front.

Remove and retain the two screws fixing the fire chassis to the backing plate.

Pull the fire forwards until the fire flue spigot is clear of the boiler canopy and lift away.

Remove the Glass Frame and Coalbed as follows:-

The 3 clips that secure the glass frame assembly are now visible across the top edge of the glass frame. The two outer clips should be released before the centre one. Release the clips by gripping centrally and pulling upwards.

When the clips are released, the glass frame assembly will lean outwards to rest on its bottom location positions, from which it can be lifted clear of the fire.

The coalbed is positioned on two locating pins. Lift the coalbed vertically to clear the pins.

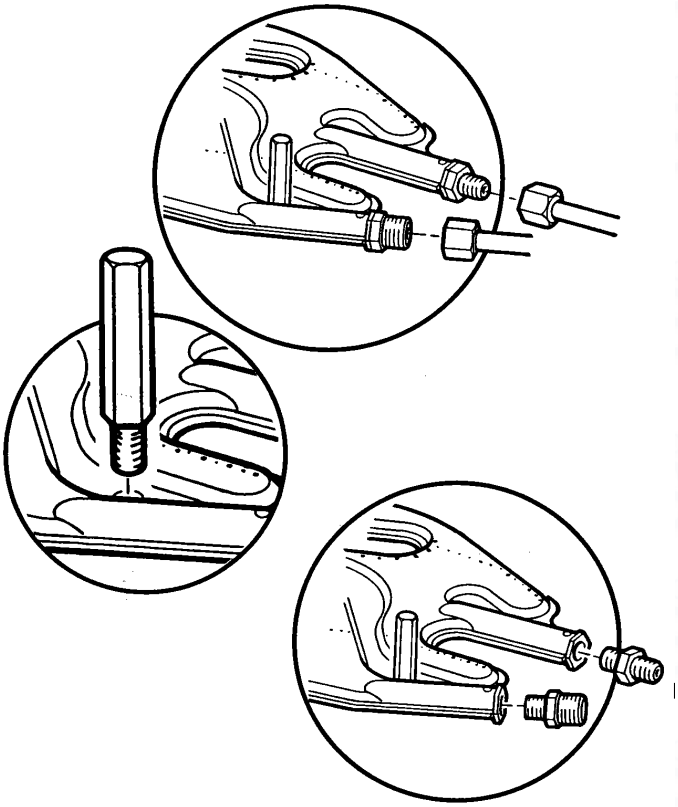

CLEANING THE BURNER/INJECTORS

Release the compression nuts that connect the gas feed pipes to the injectors on the burner.

The coalbed location pins also secure the burner in position. Unscrew and remove the pins.

Manoeuvre the burner clear of the fire, taking care not to damage the pilot assembly.

The injectors can now be removed from the burner. Using a soft brush, remove any dirt or debris from the top of the burner and ensure that the ports and aeration openings are free from obstruction.

Examine and clean the injectors. Do not use any hard tools, including pins or wire. Refit the injectors to the burner.

NOTE:- The larger injector should be filled into the front burner inlet position.

Replace the burner in the reverse order of removal.

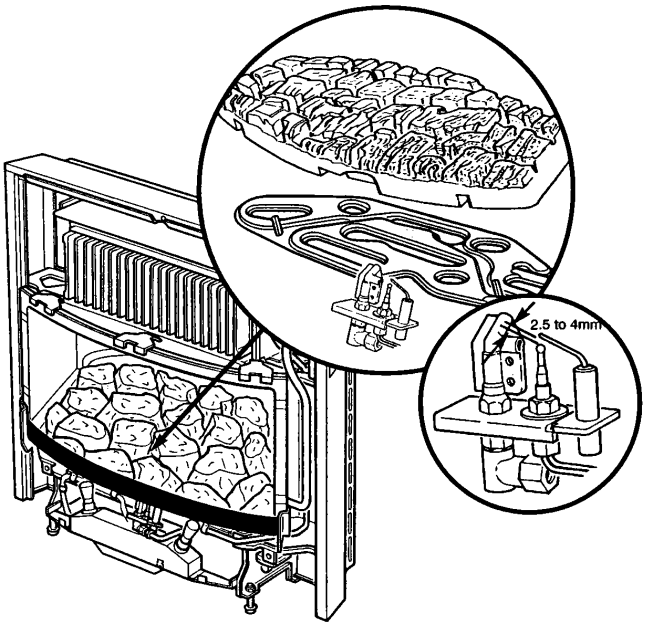

CLEANING THE PILOT/A.S.D. ASSEMBLY

NOTE:- No attempt should be made to clean the device using any hard tools, including pins or. wire.

The thermocouple, electrode and pilot burner that make up the pilot assembly are not replaceable as separate items. If any part is damaged then the pilot assembly should be replaced.

During annual appliance servicing the pilot assembly should be inspected for damage to any of the component parts and any lint or debris should be carefully removed from the aeration hole.

Check that the spark gap between the electrode and thermocouple is between 2.5 and 4mm.

Some appliances may experience nuisance shut down of the pilot. A pilot shield kit (Baxi Part No. 237319) is available to prevent this.

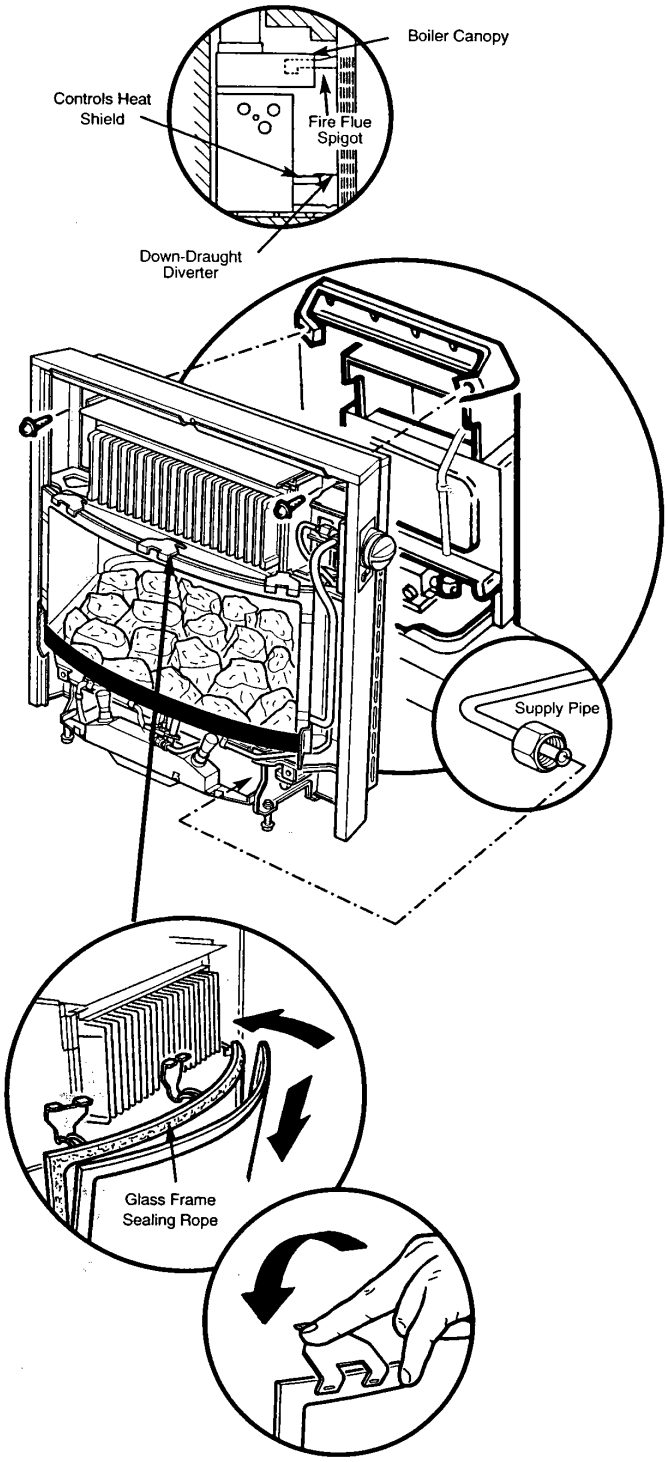

REPLACING THE FIRE

Once the boiler has been serviced, the fire can be replaced.

Locate the fire flue spigot into the boiler canopy and whilst ensuring that the down-draught diverter on the fire unit passes over the boiler controls heat shield, push the fire back against the backing plate. The fire is secured to the backing plate using the screws previously removed.

Re-connect the gas supply pipe to the fire inlet.

EXAMINATION AND ASSEMBLY OF COMPONENT PARTS

Examine the coalbed for damage and ensure that the apertures are free from blockages. If any damage has occurred then a new coalbed should be fitted. The coalbed is re-fitted by lowering it onto the location pins.

Examine the glass frame sealing rope on the fire and if any damage has occurred, fit a new one.

Examine the glass frame assembly and if it is in any way damaged, then a new one must be fitted. If satisfactory, the glass frame assembly should now be fitted. Lower the glass frame assembly into its bottom location positions and push back onto the sealing rope. Engage the clips onto the front edge of the glass frame and push down to lock. The centre clip should be secured before the outer clips.

RECOMMISSIONING

After servicing the appliance it must be recommissioned by refering to the instructions contained in the section “Commissioning the Fire”.

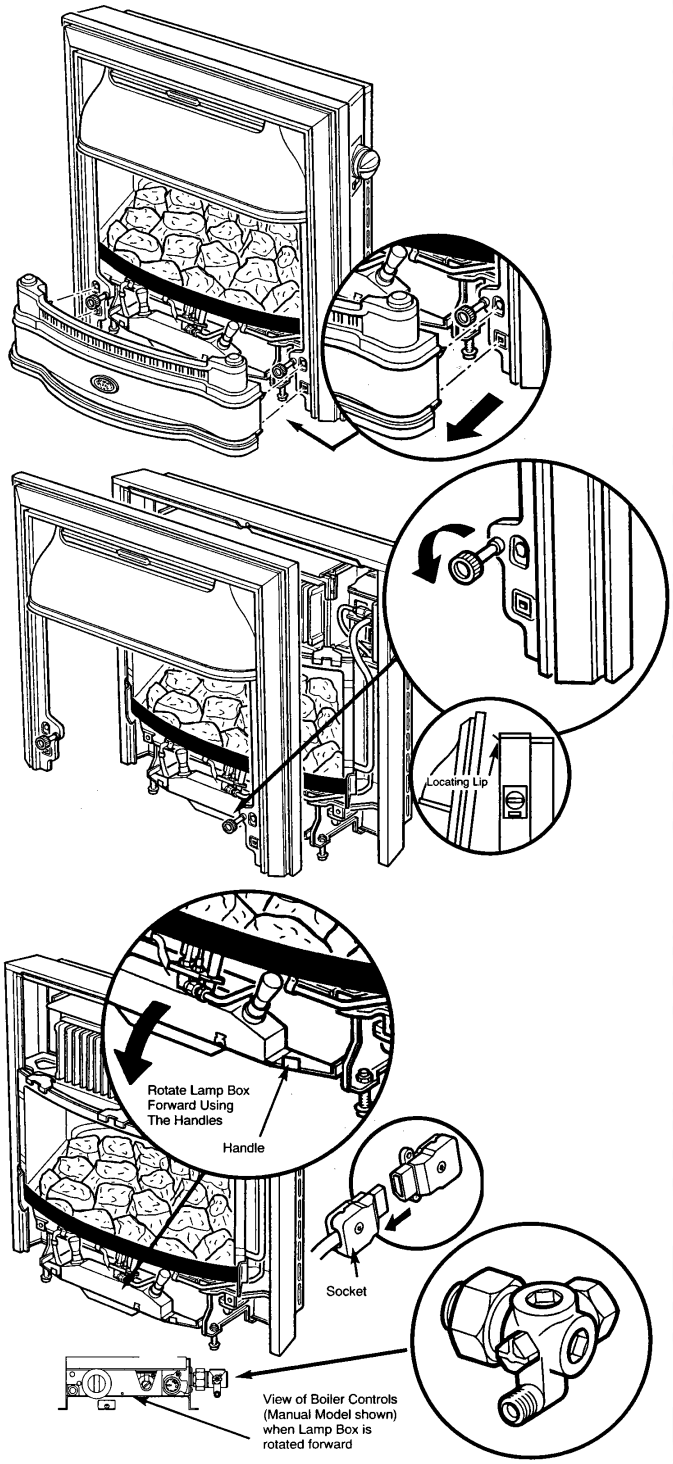

CAUTION :- After replacing any gas carrying components always check for gas soundness. (BS 6891). Before changing any components please read the Important Information section on page 4.

INITIAL PREPARATION

Remove the Outer Case Components as follows:-

Ensure the fire is cold.

Remove the fire hearth by grasping it on either side at the bottom and pulling towards you. This will release the clips and allow the hearth to be lifted away by drawing it forward.

Release the fasteners at the bottom of the facia panel, by turning them anti-clockwise.

The facia panel which is supported on a lip at the top of the fire can now be removed. Grasp the facia on either side and bring slightly forward, before lifting clear of the lip.

The outer case components are replaced by reversing their method of removal.

ISOLATE THE GAS AND ELECTRICITY SUPPLIES AS FOLLOWS :-

The lamp box, which is clipped at the top and hinged at the bottom, can now be rotated forward to allow access for isolating the gas and electrical supplies to the fire. Use the handles provided.

Isolate the electrical supply to the fire by unplugging the 3 pin socket from the plug on the fire. The plug is situated towards the left in the space behind the lamp box.

Turn off the gas supply to the fire, at the gas service cock on the boiler, by turning fully clockwise.

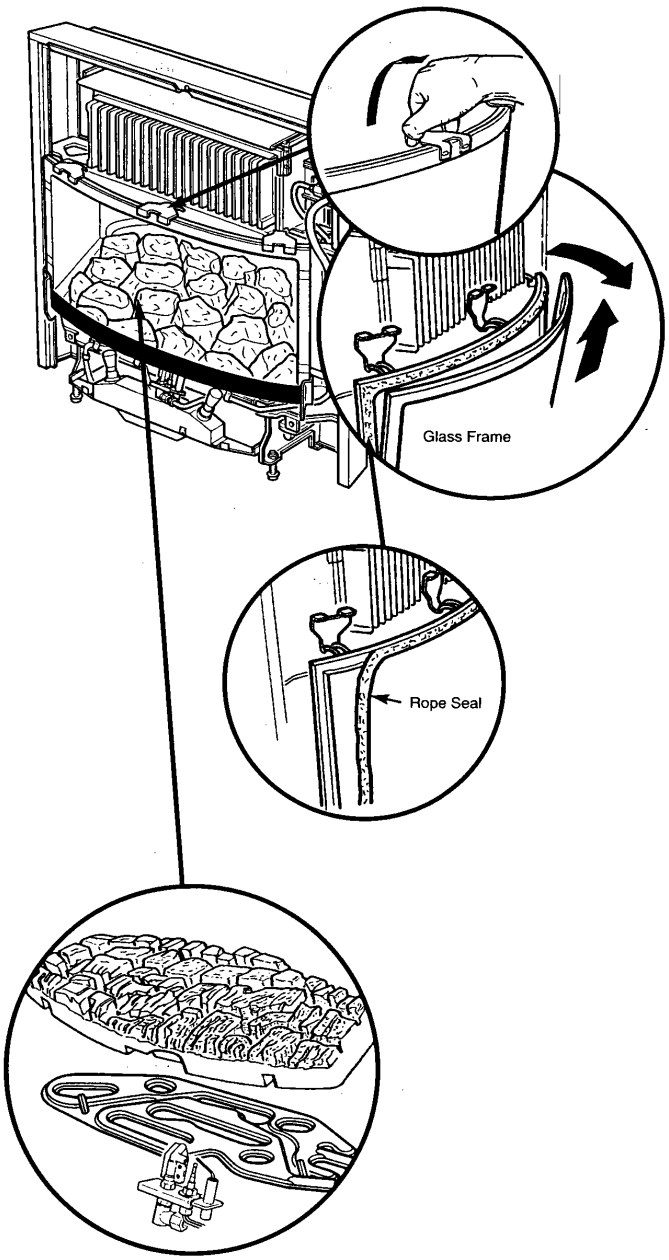

LIGHT BULBS

Your attention is drawn to the safety notice found on the lamp box. With the electricity supply to the fire isolated, the light bulbs can be changed as necessary. They should only be replaced with 15 Watt pygmy bulbs.

GLASS FRAME ASSEMBLY

Ensure that the glass panel is cold.
The 3 clips that secure the glass frame assembly are now visible across the top edge of the glass frame. The two outer clips should be released before the centre one. Release the clips by gripping centrally and pulling upwards.

When the clips are released, the glass frame assembly will lean outwards to rest on its bottom location positions, from which it can be lifted clear of the fire:

Fit the new glass frame assembly by lowering it into its bottom location positions and pushing it back onto the sealing rope. Engage the clips onto the front edge of the frame and push down to lock. The centre clip should be secured before the outer clips.

ROPE SEAL

Remove the glass frame assembly.

Pull the rope seal out of its location channel and discard.

Fit the new rope seal into the location channel by locating the centre of the rope seal into the centre of the top location channel and working around the channel so that there is an equal length down either side.

Replace the glass frame assembly.

COAL BED

Remove the glass frame assembly.

The coalbed is positioned on two locating pins. Lift the coalbed vertically to clear the pins.

CAUTION:- The coalbed is extremely fragile and must be handled accordingly. Gloves should be worn and any inhalation of the dust should be avoided. Keep the coals away from children at all times.

Fit the new coalbed by lowering it onto the location pins.

Replace the glass frame assembly.

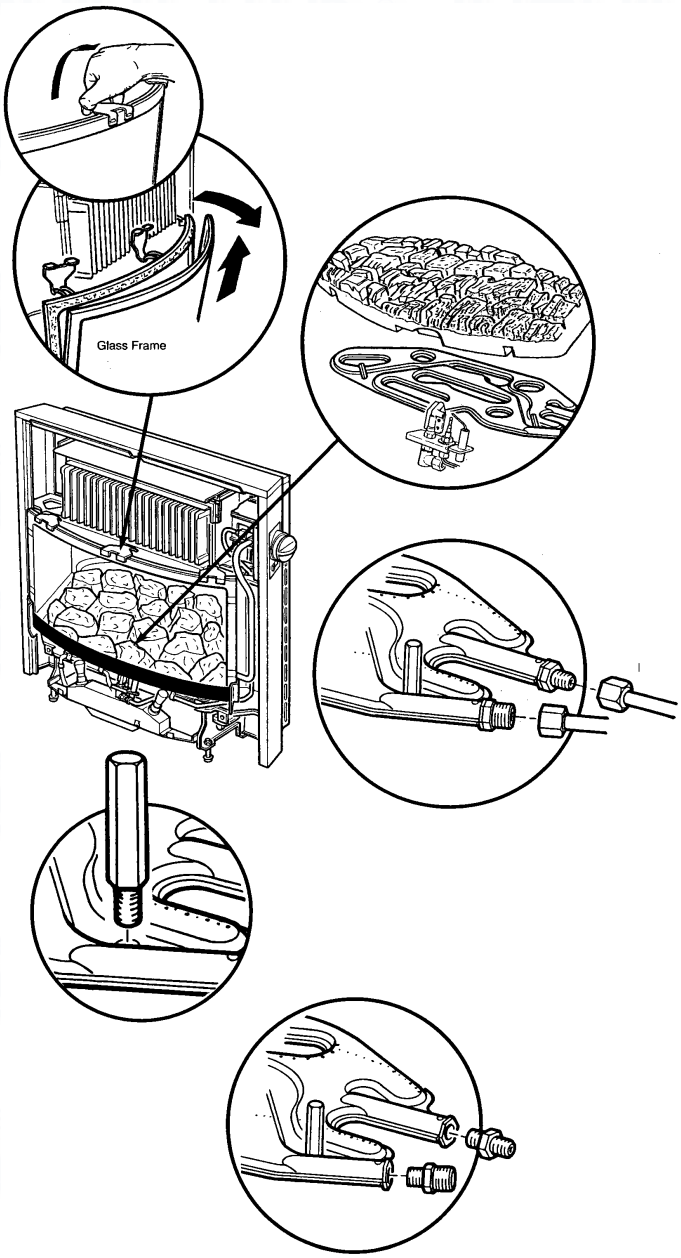

BURNER AND INJECTORS

Remove the glass frame assembly and coalbed.

Release the compression nuts that connect the gas feed pipes to the injectors on the burner.

The coalbed location pins also secure the burner in position. Unscrew and remove the pins.

Manoeuvre the burner clear of the fire, taking care not to damage the pilot assembly.

The injectors can now be removed from the burner.

Assemble the combination of new or old, burner and injectors, that are to be replaced.

NOTE:- The larger injector should be fitted into the front burner inlet position.

Replace the burner in the reverse order of removal. Replace the coalbed and glass frame assembly.

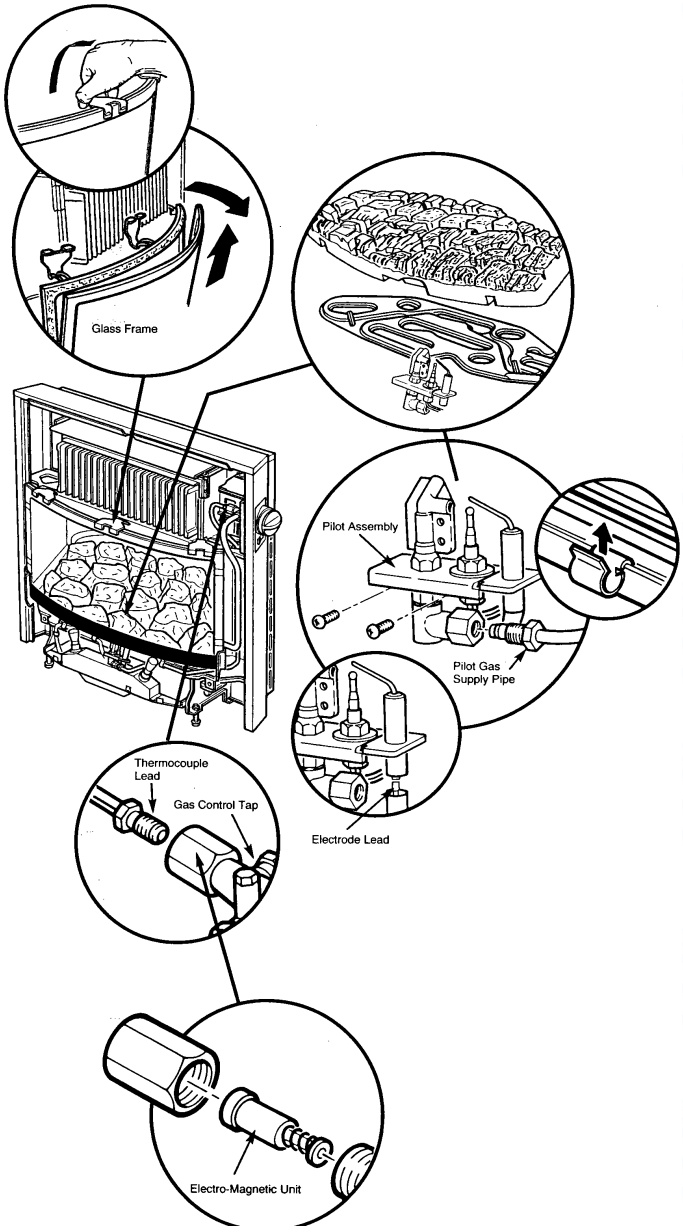

PILOT ASSEMBLY

Remove the glass frame assembly and coalbed.

Grip the pilot assembly and loosen the compression nut that connects the pilot gas supply pipe to it.

Remove the two screws that retain the pilot assembly.

Remove the pilot gas supply pipe and other associated wires out of the location clip.

Release the pilot gas supply pipe from the pilot by unfastening the compression nut.

Disconnect the electrode lead from the electrode.

Remove the thermocouple lead from the end of the gas control tap by unscrewing the small retaining nut and draw the pilot assembly out of the fire chassis.

Replace the pilot assembly in the reverse order of removal.

NOTE:- Care should be taken not to over tighten the nut that secures the thermocouple lead into the end of the gas tap.

Replace the coalbed and glass frame assembly.

ELECTRO-MAGNETIC UNIT

IMPORTANT:- If the appliance is filled with a pilot shield, electro-magnetic unit part no.239413 should be ordered. Appliances without a shield require part no.082462.

Remove the thermocouple lead from the end of the gas control tap by unscrewing the small retaining nut.

Remove the large nut that retains the electro-magnetic unit and remove the unit from the gas control tap.

Fit the new electro-magnetic unit and replace the retaining nut. Fix the thermocouple back into position, taking care not to overtighten the retaining nut.

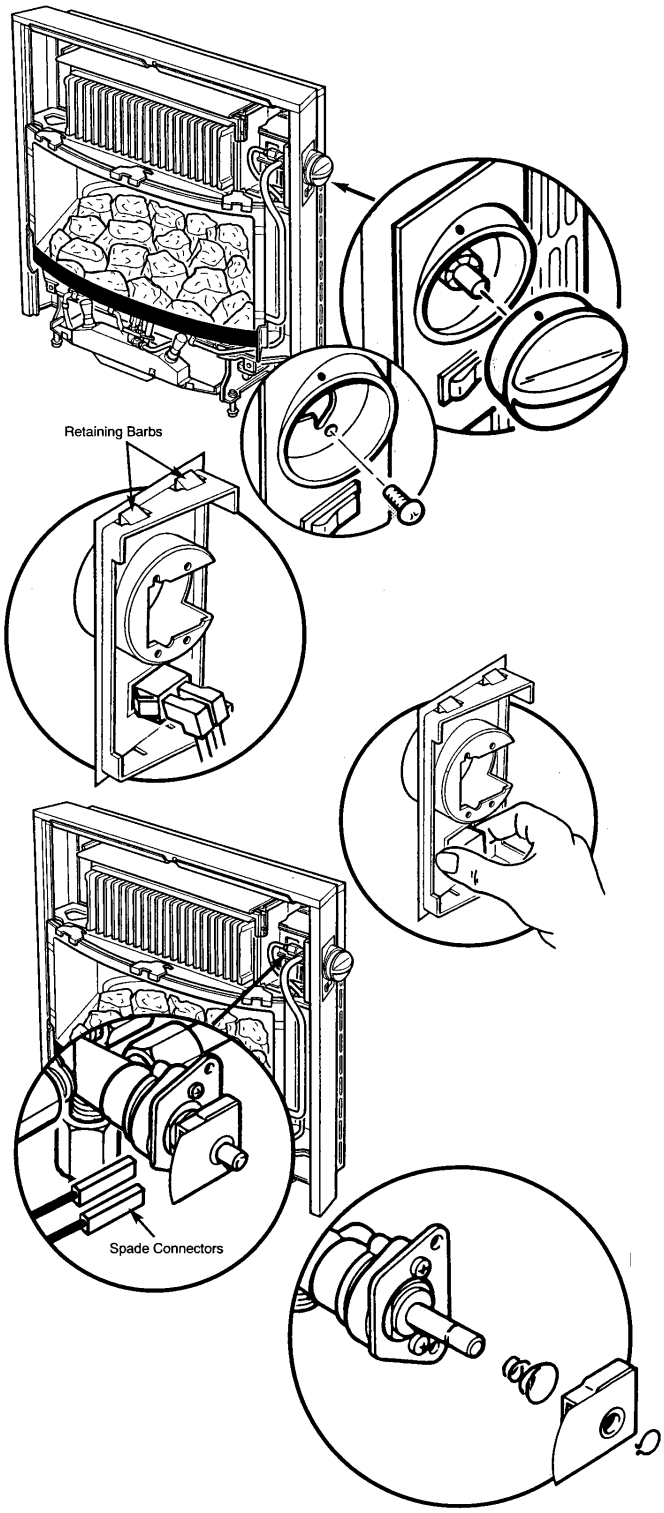

LIGHT SWITCH AND MICRO SWITCH

For either of these operations the bezel is first removed.

TO REMOVE THE BEZEL:-

Ensure that the electricity supply to the fire unit is isolated.

Remove the control knob by pulling it from the spindle.

Undo the screw securing the bezel. From the inside of the chasis depress the two upper retaining barbs and ease the bezel outwards.

TO CHANGE THE LIGHT SWITCH:-

Remove the two spade connectors from the switch.

Press together the two retaining arms on the rear of the switch to release it from the bezel.

Fit the new switch to the bezel, ensuring that the OFF position will be towards the front of the fire. Reconnect the spade connectors to the new switch. Replace the bezel and control knob.

TO CHANGE THE MICRO SWITCH:-

Disconnect the two spade connectors from the micro switch.

Release the micro switch and spring from the gas tap spindle by removing the circlip.

Discard the old micro switch and fit the new one onto the gas tap spindle, remembering to first replace the spring.

Reconnect the spade connectors to the micro switch. Replace the bezel and control knob.

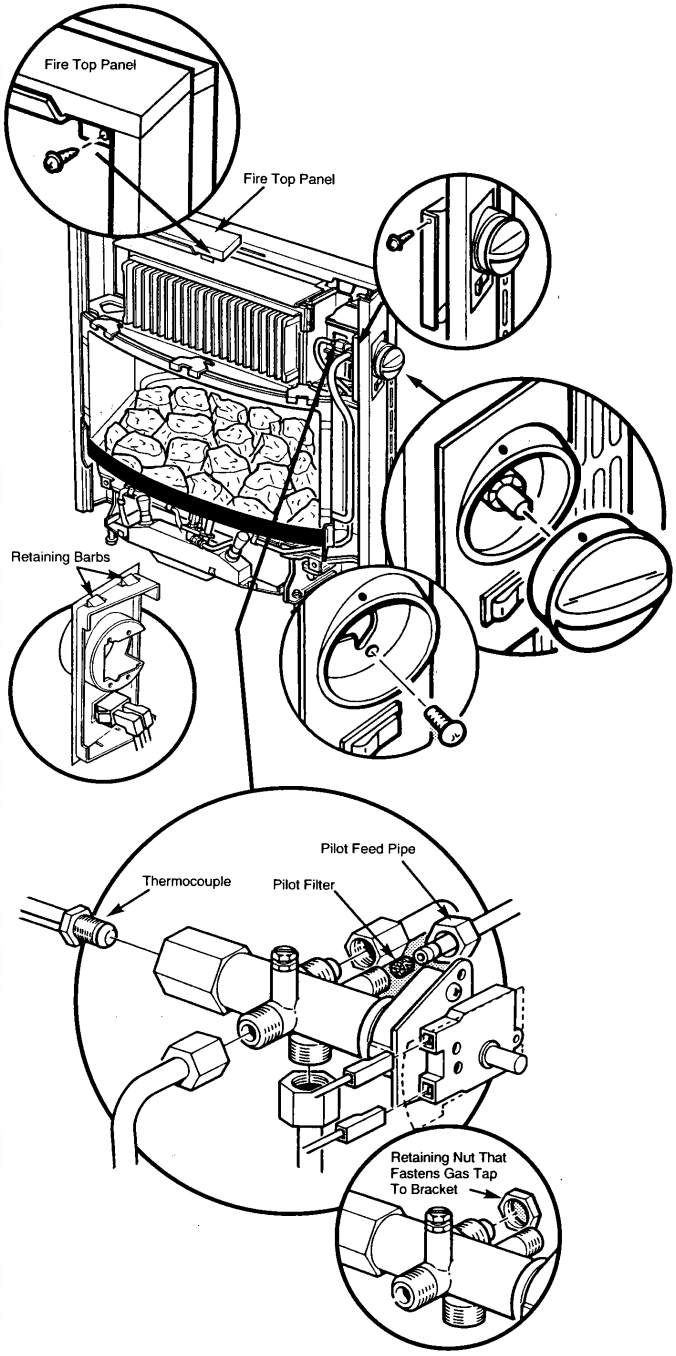

GAS CONTROL TAP AND PILOT FILTER

Ensure that the electricity and gas supply to the fire unit is isolated.

Remove the two fixing screws that secure the fire top panel to the chassis and lift the panel at the front to release it from the fire.

Remove the cover that shields the micro switch and light switch electrical connections by releasing the single retaining screw and drawing the cover forward.

Remove the control knob by pulling it from the spindle.

Undo the screw securing the bezel. From the inside of the chasis depress the two upper retaining barbs and ease the bezel outwards.

Disconnect the two electrical connections from the micro switch.

Release the thermocouple from the gas control tap by unscrewing the small retaining nut.

Release the gas pipes that are connected to the gas tap by unfastening the compression nuts.

NOTE:- The small diameter pipe is the pilot feed pipe. The pilot filter is situated in the gas tap at the end of this pipe.

On reassembly ensure that the new pilot filter supplied with the replacement tap is fitted.

Remove the gas tap retaining nut and withdraw the gas tap from the fire.

If the pilot filter has not already been removed, it can be removed at this stage.

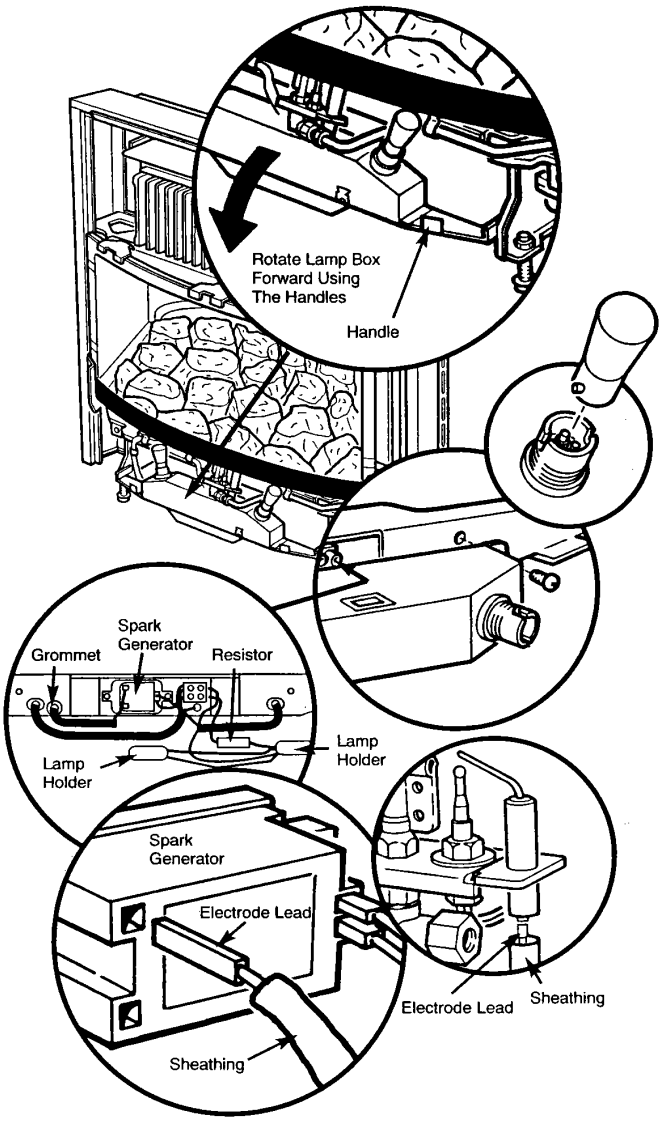

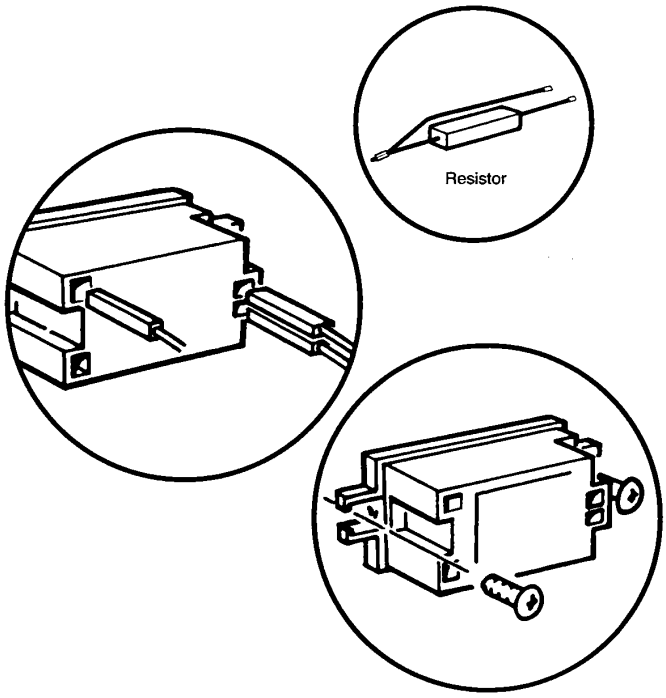

ELECTRODE LEAD, RESISTOR OR SPARK GENERATOR

To replace any of these components it is necessary to gain access to the inside of the lamp box.

The lamp box, which is clipped at the top and hinged at the bottom is rotated forward to lay flat. Use the handles provided.

Remove the bulbs.

Remove the two screws that secure the top half of the lamp box in place and bring it forward to expose the spark generator and resistor.

To change the electrode lead:-

Remove the spade connector that is attached to the spark generator and the spade connector that is connected to the electrode.

Remove the lead and its sheathing from the retention clips.

On entering the lamp box, the sheathing goes through a grommet. The grommet can be removed and the sheathing brought clear of the fire with it.

The old electrode lead is now withdrawn from the sheathing and replaced by the new one.

Fix the spade connector to the electrode and re-route the sheathing back to the lamp box, securing it in the clips from which it was previously removed. Refit the grommet and fix the spade connector to the spark generator. Replace the lamp box top.

To change the resistor:-

Note which terminals the resistor leads are connected to.

Disconnect the resistor leads from the terminals and pull the resistor out of the clip that retains it.

Refit the new resistor in the reverse order from which the old one was removed. Replace the lamp box top.

To change the spark generator:-

Disconnect the electrode lead and the electrical wiring from the spark generator.

Remove the two screws that secure the spark generator and use them to secure the new one in place.

Reconnect the electrical wiring and the electrode lead. Replace the lamp box top.

SHORT PARTS LIST – Page 29

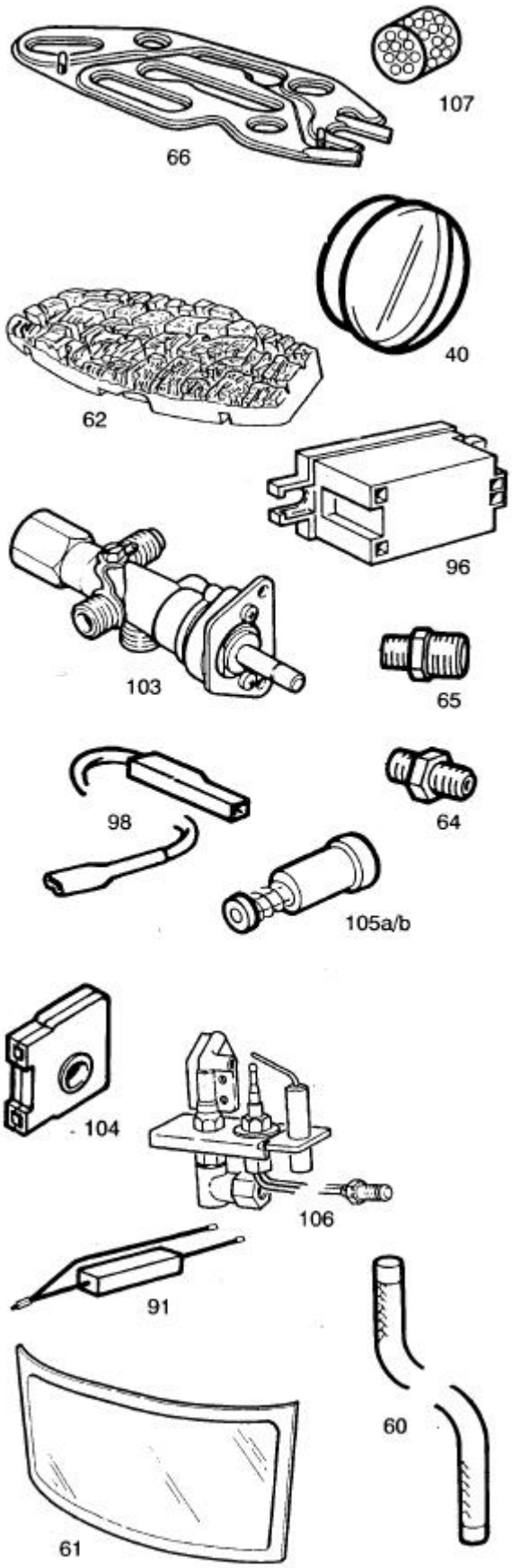

Key No.	G.C. No.	Description	Manufacturers Part No.
61	156 232	Glass and Frame Assy	233864
40	156 233	Knob Fire Control	233466
60	156 063	Rope Seal	226876
106	156 301	Pilot Assembly	234099
103	E01 -562	Kit - Tap - Gas Control	239411
105a	384 248	Electro Magnetic Unit	082462
105b	E01 -617	Electro Magnetic Unit *	239413
104	364 997	Micro Switch Assy	232333
66	156 235	Burner - Special	232435
62	E01 -124	Coal Bed	238964
65	379 784	Front Fire Injector F06	233460
64	386 807	Rear Fire Injector F02	226910
96	E01 -948	Spark Generator	240257
98	156 237	Electrode Lead	233704
91	386 129	Resistor & lead assy 68D	228955
107	205 723	Pilot Filter	082412

*Alternative part-see - page 25

spares & parts online IBASIS.CO.UK

Fault Finding – Page 30

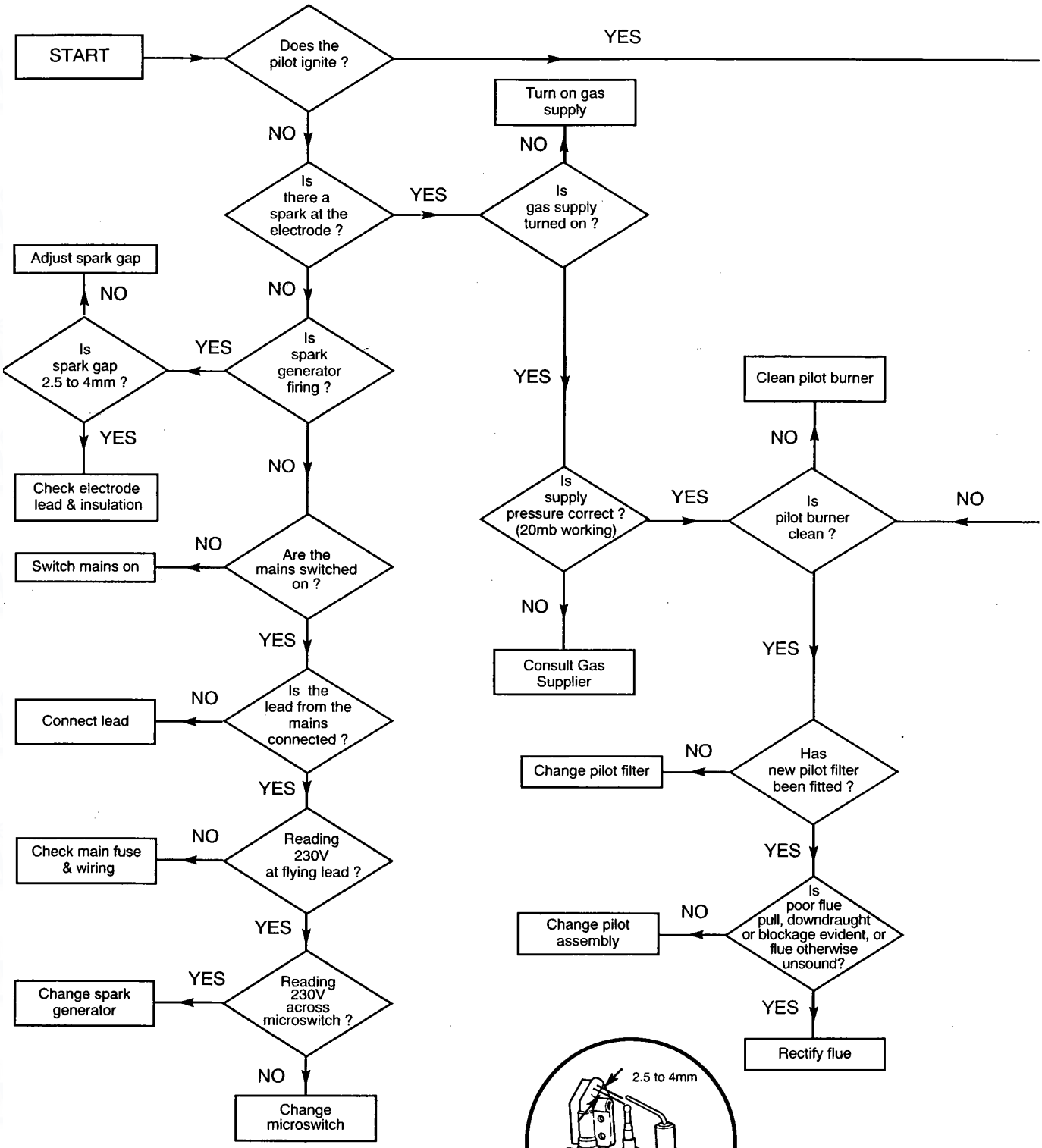

The thermocouple cannot be changed as an individual component.The complete assembly must be replaced in the event of one or other component failure(s).
Only use a Genuine Baxi Spare Part.

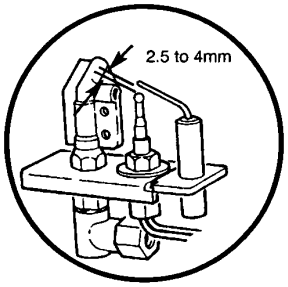

Spark Gap

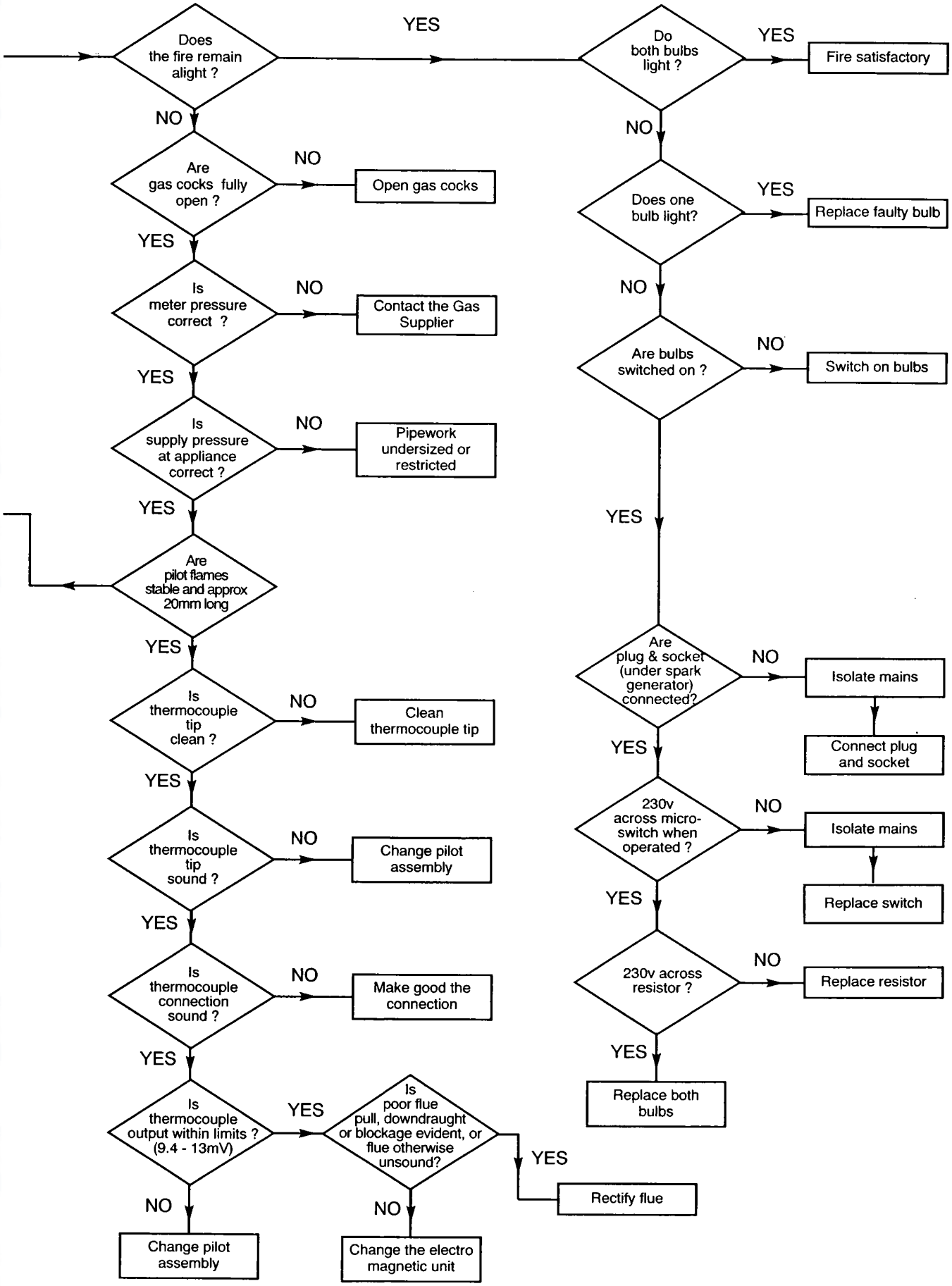
Does the fire remain alight ?
YES
NO
Are gas cocks fully open ?
NO
Open gas cocks
YES
Is meter pressure correct ?
NO
Contact the Gas Supplier
YES
Is supply pressure at appliance correct ?
NO
Pipework undersized or restricted
YES
Are pilot flames stable and approx 20mm long
YES
Is thermocouple tip clean ?
NO
Clean thermocouple tip
YES
Is thermocouple tip sound ?
NO
Change pilot assembly
YES
Is thermocouple connection sound ?
NO
Make good the connection
YES
Is thermocouple output within limits ? (9.4 - 13mV)
YES
Is poor flue pull, downdraught or blockage evident, or flue otherwise unsound?
YES
Rectify flue
NO
Change pilot assembly
NO
Change the electro magnetic unit
Do both bulbs light ?
YES
Fire satisfactory
NO
Does one bulb light?
YES
Replace faulty bulb
NO
Are bulbs switched on ?
NO
Switch on bulbs
YES
Are plug & socket (under spark generator) connected?
NO
Isolate mains
Connect plug and socket
YES
230v across micro-switch when operated ?
NO
Isolate mains
Replace switch
YES
230v across resistor ?
NO
Replace resistor
YES
Replace both bulbs

It is important that the existing installation is correct and that the flue is performing satisfactorily. Any remedial work necessary should be completed before the new appliance is commissioned. Please read the Important Information section on page 4.

WARNING: Renewal firefronts are fitted with an Atmospheric Sensing Device (A.S.D.). If they are installed in conjunction with a boiler NOT fitted with an A.S.D. (i.e. 401, 552, 45/3 & 57/3), under adverse flue conditions the boiler WILL NOT shut down.

NOTE: A permanent live is required for correct operation of the firefront.

Additional Installation Instructions

Bermuda RG3 Renewal G.C.N° 37 075 06A

The kit supplied with Renewal appliances provides all the necessary components to fit a Baxi Bermuda RG3 Renewal firefront to the following Bermuda Boilers.

The Renewal Fires may be used with the following Boilers:

Bermuda 401	G.C.N° 44 077 49
Bermuda 552	G.C.N° 44 077 50
Bermuda 45/3 M	G.C.N° 44 077 61
Bermuda 45/3 E	G.C.N° 44 077 60
Bermuda 57/3 M	G.C.N° 44 077 63
Bermuda 57/3 E	G.C.N° 44 077 62
Bermuda 45/4 M	G.C.N° 44 077 71
Bermuda 45/4 E	G.C.N° 44 077 73
Bermuda 57/4 M	G.C.N° 44 077 72
Bermuda 57/4 E	G.C.N° 44 077 74

Existing Fire

REMOVING THE EXISTING FIRE

Isolate the gas and electrical supply, including any permanent live, to the combined appliance. Remove the controls cover panel from the front of the fire.

Remove the tap control knob. Disconnect the electrical socket from the fire plug if fitted. Remove the screws securing the outercase to the innercase. Lift off the outercase.

Turn the gas service tap to the “Boiler only” position by turning ¼ turn clockwise.

Remove the radiants if fitted.

Disconnect the supply pipe at the fire inlet.

Remove any screws securing the fire to the wall. Pull the fire forward until the flue spigot is clear of the boiler hood and lift away.

Remove and discard the fire supply pipe from the service gas tap. Disconnect and discard any electrical wiring between the boiler input terminal and the fire.

Boiler Modification

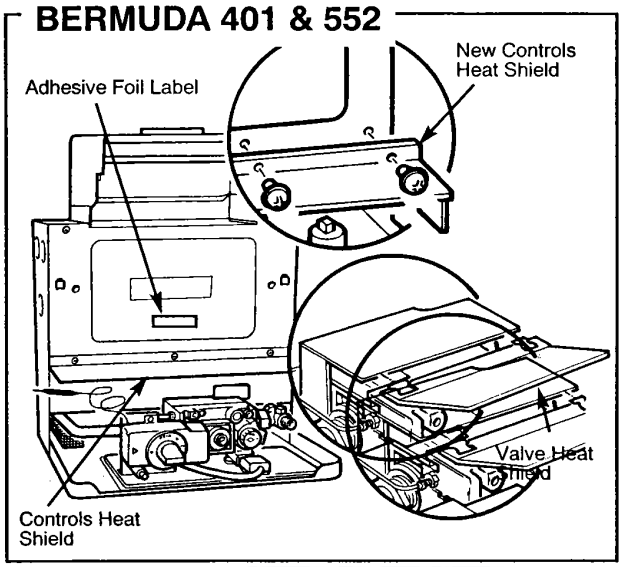

NOTE: It is important at this stage to fit the controls heat shield supplied with the fire unit to the boiler front panel.

Remove and discard the controls heat shield provided with the boiler and fit the new controls heat shield using the screws previously removed.

Fit the additional valve heat shield in position over the gas valve by engaging the two clips and pushing home as shown above.

Check the data badge on the back boiler. If the boiler internal wiring is not depicted, take the foil label from the kit and attach it below the data badge on the boiler front door.

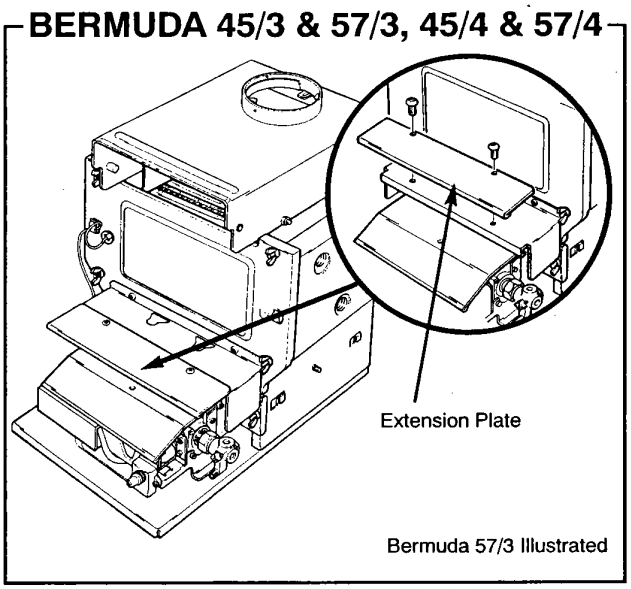

If a radiant firefront has been installed previously it will be necessary to unscrew and remove the extension plate from the boiler controls heat shield. Once removed this item can be discarded.

If the fire is wall mounted remove and discard the existing support frame. (Bermuda 401 only) Retain the two support brackets. These will be needed in wall mounting the renewal fire.

If the fire is hearth mounted ensure that the base of the builders opening and the front hearth are at the same level.

Refer to “Site Requirements” (page 6) and prepare the Fire Support Plate - Bermuda 401 & 552 wall surface to the dimensions specified.

WALL FIXING
Two wall fixing plates are supplied in the Renewal Kit, one for Bermuda 401/552 and one for Bermuda 45/3, 57/3, 45/4 & 57/4.

BERMUDA 401 & 552
Take the fire support plate from the fire unit packaging and loosely attach it beneath the boiler base protruding Fire Support Plate - Bermuda 45/3, 57/3 & 45/4, 57/4 from the fireplace opening using the M5 Nuts and screws provided. Use the centre group of holes at each side.

NOTE: If the fire is being used with a Bermuda 401 boiler unit, the support brackets from the previous plate must be fitted before the fire support plate can be fixed in place.

Push the support plate backwards until it touches the surround or wall face and tighten the screws to lock it in position.

BERMUDA 45/3 57/3 45/4 & 57/4
Take the fire support plate from the fire unit packaging and loosely attach it above the boiler base protruding from the fireplace opening using the screws provided. Use the slots at each side.

Push the support plate backwards until it touches the surround or wall face and tighten the screws to lock it in position.

WIRING
When connecting the firefront wire to the plug on the boiler base tray refer to pages 7-10 of these instructions.

FIRE SUPPLY PIPE
Two fire supply pipes are supplied in the Renewal Kit, one for Bermuda 401 & 552 and one for Bermuda 45/3, 57/3, 45/4 & 57/4. The smaller (6mm) diameter one is for Bermuda 45/3, 57/3, 45/4 & 57/4 installations.

TO CONTINUE FITTING THE FIREFRONT REFER TO THE INSTALLATION CHAPTER OF THESE INSTRUCTIONS.

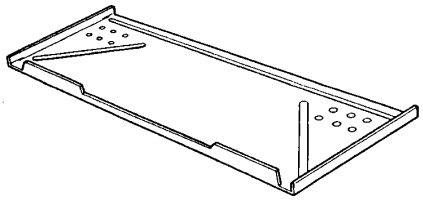

Fire Support Plate - Bermuda 401 & 552

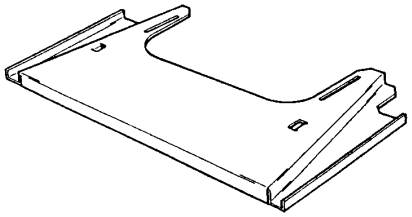

Fire Support Plate - Bermuda 45/3, 57/3 & 45/4, 57/4

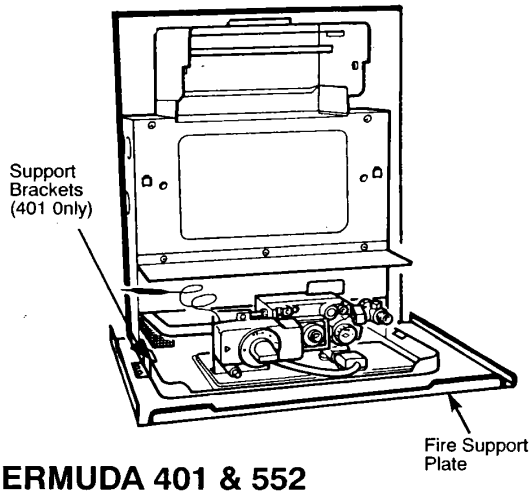

BERMUDA 401 & 552

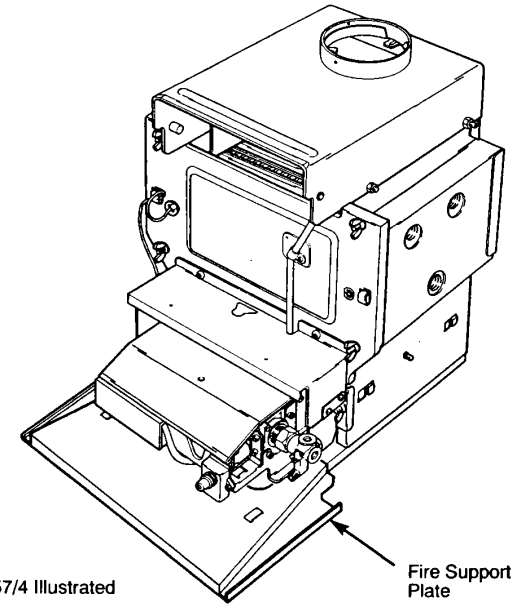

Bermuda 57/4 Illustrated

BERMUDA 45/3 & 57/3, 45/4 & 57/4

Click here for Helplines