Baxi Bermuda SL3

Fireside Gas Central Heating Unit

Comp No. 237883 - Issue 4 – 1/00

Installation and Servicing Instructions

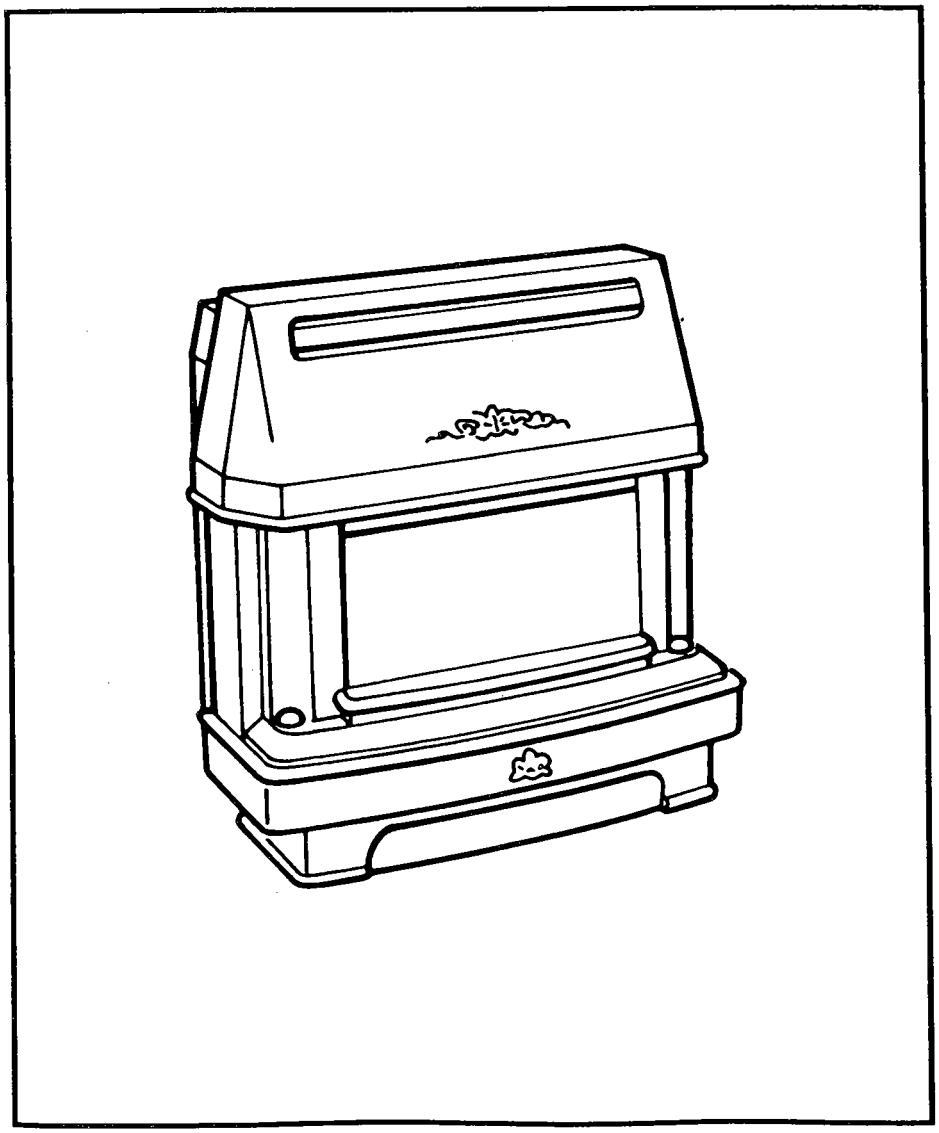

BAXI

spares & parts online IBASIS.CO.UK

Natural Gas

Baxi Bermuda SL3
G.C.No 37 077 60

For use with the following boilers:

Bermuda 45/4 M
G.C.No 44 077 71
Bermuda 45/4 E
G.C.No 44 077 73
Bermuda 57/4 M
G.C.No 44 077 72
Bermuda 57/4 E
G.C.No 44 077 74

Renewal

Baxi Bermuda SL3 Renewal
G.C.No 37 075 02A
For use with the following boilers:

Bermuda 401	**Bermuda 45/4 M**
G.C.No 44 077 49	**G.C.No** 44 077 71
Bermuda 552	**Bermuda 45/4 E**
G.C.No 44 077 50	**G.C.No** 44 077 73
Bermuda 45/3 M	**Bermuda 57/4 M**
G.C.No 44 077 61	**G.C.No** 44 077 72
Bermuda 45/3 E	**Bermuda 57/4 E**
G.C.No 44 077 60	**G.C.No** 44 077 74
Bermuda 57/3 M	
G.C.No 44 077 63	
Bermuda 57/3 E	
G.C.No 44 077 62	

Propane Gas

Baxi Bermuda SL3 Propane
G.C.No 37 077 70

For use with the following boiler:
Bermuda 553 Propane
G.C.No 44 077 75

B.S. Codes of Practice

STANDARD	SCOPE
B.S. 6891	Gas Installation.
B.S. 5546	Installation of hot water supplies for domestic purposes.
B.S. 5871	Installation of gas fires, convectors and fire/back boilers.
B.S. 5440: Part 1	Flues
B.S. 5440: Part 2	Air Supply
B.S. 6798	Installation of gas fired hot water boilers.
B.S. 5449: Part 1	Forced circulation hot water systems.

INTRODUCTION

This unit is the gas fire section of the Bermuda SL3 central heating boiler and gas fire. The heat input is 5.70kW (19,450 Btu/h) and the fire is available for use with Gas Type G20 (Natural Gas) at 20mbar or Gas Type G31 (Propane). The fire is controlled by a knob positioned on the right hand side of the case. Ignition is by piezo spark to the pilot (Fig 13). For details of Propane appliances see back page.

The control knob has six positions giving a choice of four output rates.

POSITION ●	-	THE FIRE IS OFF.
POSITION ★🔥	-	IGNITION/PILOT.
POSITION 1	-	THE FIRE IS ON LOW.
POSITION 2	-	THE FIRE IS ON MEDIUM.
POSITION 3	-	THE FIRE IS ON MEDIUM/HIGH.
POSITION 4	-	THE FIRE IS ON HIGH.

The artificial coal bed is illuminated by two concealed lamps. These lamps are operated by a switch adjacent to the control knob.

Baxi is a BS-EN ISO 9001
Accredited Company

spares & parts online IBASIS.CO.UK

These instructions must be read in conjunction with the separate instructions for the boiler section

INSTALLATION

The appliance is suitable for installation only in G.B. & I.E. and should be installed in accordance with the rules in force. For Ireland install in accordance with I.S. 813 “Installation of Gas Appliances”.

The Installation must be carried out by a CORGI Registered installer or other competent person and be in accordance with the relevant requirements of the GAS SAFETY (Installation and Use) REGULATIONS, the BUILDING REGULATIONS (Scotland) (Consolidation), the LOCAL BUILDING REGULATIONS, the CURRENT I.E.E. WIRING REGULATIONS and bye laws of the LOCAL WATER UNDERTAKING. It should also be in accordance with the relevant BRITISH STANDARD CODES OF PRACTICE.

SITE REQUIREMENTS

The principal site requirements are determined by the boiler but the following details are essential for the correct installation of the fire:

Fireplace opening: (Fig.1)

Width	406mm (l6in)	MIN 584mm (23in) MAX
Height	560mm (22in)	

Wherever possible always make the fireplace opening to the maximum dimensions.

Hearth: If the fire is to be hearth mounted, the hearth must be at least 13mm (½ in) thick non-combustible material. It must be at least 326mm (12 13/16 in) deep x 897mm (35 5/16 in) wide, centrally placed about the fireplace opening and at the same level as the base of the builders opening. The top surface of the hearth should be a minimum of 50mm (2 in) above floor level and must be level with the base of the opening. **On no account should the fire unit be fitted directly onto a combustible floor or carpet.**

Surround or Wall Finish: (Figs.1 and 2) The wall behind the fire must be non-combustible. The surround or wall finish must have a flat vertical area centrally placed about the opening measuring a minimum of 765mm (30 1/8 in) high by 765mm (30 1/8 in) wide. If a surround is fitted any gaps between it and the wall must be sealed and it must have a rating of l00ºC or higher.

Wall Fixing: (Fig.2) The bottom of the fire must be 100mm (4in) to 125mm (5in) above the floor level.

It is strongly recommended that the fireplace opening is made to the maximum dimensions.

A shelf may be fitted above the fire provided that it is not less than 76mm (3in) above the top of the fire and does not exceed 230mm (9in) in depth. The area between the shelf and the top of the fire must be non-combustible.

Ventilation: Ventilation air supply to BS 5440 Part 2 is required. The permanent ventilation area size requirements are:-

SL3 & 45/4 69.075 cm^2 (10.7 in^2)
SL3 & 57/4 89.685 cm^2 (13.9 in^2)

The permanent vent may be directly into the room containing the appliance. The vent may also be sited in another room provided an interconnecting vent is used. The vent must not be installed inside the builders opening. The vent should be sited following good practice for a habitable room. We recommend the use of the Stadium BM720 “Black Hole” ventilator which is available from your local merchant.

Important Information

This product contains Refractory Ceramic Fibres (R.C.F.) which are man-made vitreous silicate fibres. Excessive exposure to these materials may cause temporary irritation to eyes, skin and respiratory tract. Care must be taken when handling these articles to ensure the release of dust or fibres is kept to a minimum.

To ensure that the release of fibres from these articles is kept to a minimum, during installation and servicing it is recommended that a H.E.P.A. filtered vacuum is used to remove any dust, soot or other debris accumulated in and around the appliance. This should be performed before and after working on the installation.

It is recommended that any replaced item(s) are not broken up but sealed within heavy duty polythene bags and clearly labelled “R.C.F. waste”. This is not classified as “hazardous waste” and may be disposed of at a tipping site licensed for the disposal of industrial waste.

Protective clothing is not required when handling these articles but it is recommended that gloves are worn and the normal hygiene rules of not smoking, eating or drinking in the work area are followed and always wash hands before eating or drinking.

Warning: The addition of anything that may interfere with the normal operation of the appliance (e.g. FLUE DAMPERS, ECONOMISERS etc.). without the express written permission of Baxi Limited could invalidate the appliance warranty and infringe the GAS SAFETY (Installation and Use) REGULATIONS.

ELECTRICAL CONNECTIONS

The supply must be 230V ~ 50Hz 110W. The electrical supply to the fire is via a length of 3 core cable with 3 pin socket provided. The cable must be connected to the electrical plug and socket on the boiler base (Fig.4). These connections should be made when the boiler electrical connection is made as follows: (See also Boiler Installation Instructions).

Manual Controls Models

CONNECT THE BLUE WIRE TO THE TERMINAL MARKED ‘N’.
CONNECT THE BROWN WIRE TO THE TERMINAL MARKED ‘L2’.
CONNECT THE GREEN/YELLOW WIRE TO THE TERMINAL MARKED ⏚

Electronic Controls Models

CONNECT THE BLUE WIRE TO THE TERMINAL MARKED ‘N’.
CONNECT THE BROWN WIRE TO THE TERMINAL MARKED ‘L’.
CONNECT THE GREEN/YELLOW WIRE TO THE TERMINAL MARKED ⏚

A permanent live must be fitted to the remaining terminal in the socket marked L2’ or ‘L’. (See Boiler Instructions).

NOTE: Both the fire and the boiler must be supplied by the same isolating switch. 4 core input cable for connection to the boiler unit must not be less than 0.75mm² (24 x 0.2mm) PVC to IEC 53 code 227 (heat resistant).

Illustrated Wiring Diagram

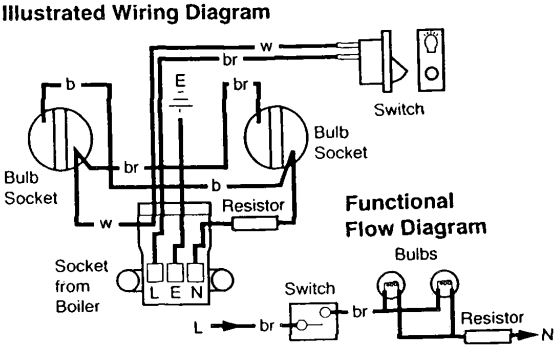

GAS SUPPLY

1. The gas supply is provided from the service tap on the boiler unit. A supply pipe is provided with the fire. This pipe has one flared end for connection to the fire and a plain end which is connected to the service tap by a nut and olive.
2. Dependent upon the position of the boiler relevant to the surround or wall finish face, it may be necessary to shorten the supply pipe. IF THE PIPE HAS TO BE SHORTENED CARE MUST BE TAKEN. The length of the supply pipe is determined as follows:
   (a) Measure the distance 'D' from the centre of the front positioning 'V mark on the boiler tray, back to the surround face or finished wall face (Fig.3).
   (b) FROM THE PLAIN END of the supply pipe cut off a length of pipe equal to the distance 'D' measured above. Take care to ensure that the cut is square and the pipe is free from burrs and swarf.

   ALTERNATIVELY

   (c) The amount of pipe required to be cut off can be determined by holding the PLAIN END of the pipe against the surround or finished wall face, marking the pipe at the position of the centre of the front positioning 'V mark on the boiler tray.
3. After threading the steel flare nut on the above pipe, connect the plain end to the service tap with the remaining nut and olive. It is important to ensure that the flared end of the pipe:
   (a) Faces to the right.
   (b) Is parallel with the hearth or floor.
4. It is necessary to unscrew and remove the extension plate from the boiler controls heat shield. Once removed this item can be discarded (Fig.4).

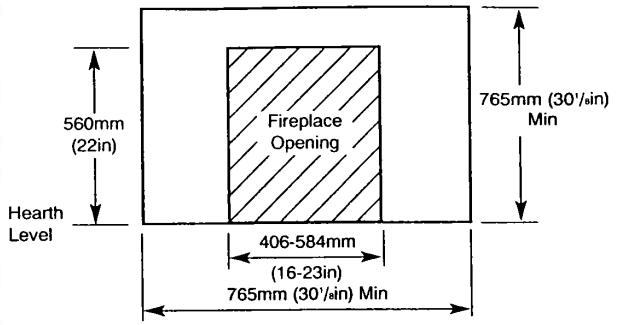

If the opening is being purposely prepared the maximum dimensions are strongly recommended

Fig. 1 Fireplace Opening

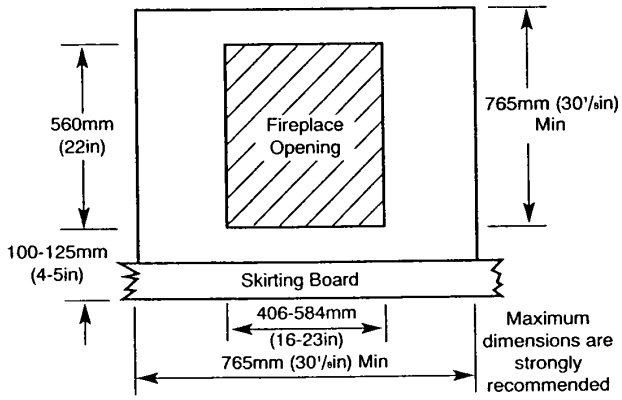

Fig. 2 Wall Fixing

Fitting the Fire

HEARTH FIXING

1. Fit the fire backing plate to the fire using the M5 x 8mm thread forming screws provided (Fig.5).

2. Locate the fire spigot into the draught diverter on the boiler. Push the fire backwards until the backing plate touches the surround or finished wall face. Adjust the feet to level the fire (Fig.6).

3. Mark the position of the most suitable pair of securing holes in the fire backing plate (Fig.5) and remove the fire. Drill and plug the wall with suitable plugs. Replace the fire and secure to the wall with suitable fixing screws.

4. Connect the supply pipe to the fire inlet connection.

WALL FIXING

1. Slide the fire support plate over the overhanging boiler base (Fig.4). Using the screws provided, loosely attach the plate using the slots at each side.

2. On electronic control boilers it will be necessary to remove the input plug from the controls. Push the support plate backwards until it touches the wall surface and tighten the screws to lock the frame in position. Locate the fire spigot into the draught diverter on the boiler. Push the fire backwards until the backing plate touches the finished wall face. Adjust the feet to level the fire (Fig.6).

3. Mark the position of the most suitable pair of securing holes in the fire backing plate (Fig.5) and remove the fire. Drill and plug the wall. Replace the fire and secure to the wall with the two fixing screws provided.

4.Connect the gas supply pipe to the fire inlet connection.

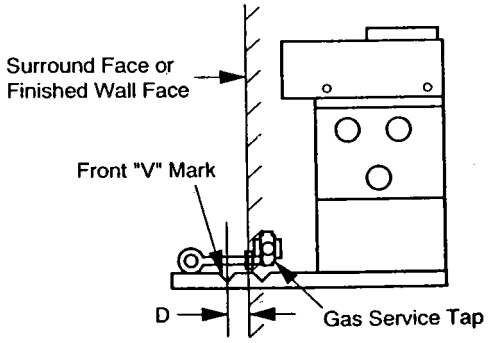

Fig. 3 Gas Supply Pipe

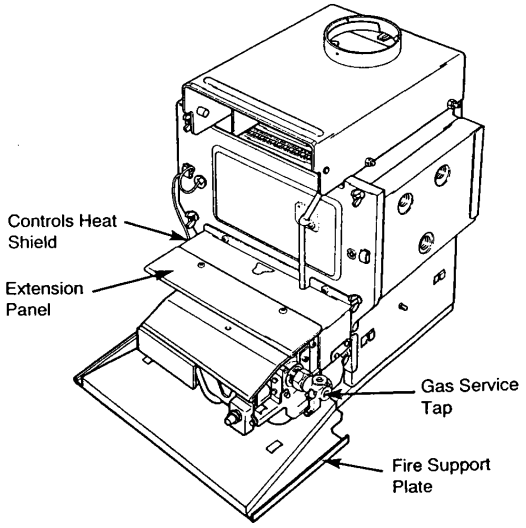

Fig. 4 Wall Fixing - Support Plate

Commissioning the Fire – Page 5

1. Remove the polystyrene fitting securing the coal bed (Fig.11) as follows:
   (a) Disengage the front panel retaining clamps and remove the glass front panel.
   (b) Remove the polystyrene fitting securing the coal bed.
   (c) Carefully remove the coal bed from its plastic bag.

CAUTION: The coal bed is extremely fragile and must be handled accordingly. Gloves should be worn and any inhalation of the dust should be avoided. Keep the coals away from children at all times. Please read the Important Information Section on page 3.

   (d) Replace the coal bed and glass front panel.

2. Remove the pressure test point sealing screw and connect a pressure gauge (Fig.6).

3. Turn on the gas service tap (at present supplying gas to the boiler only) fully anti-clockwise. The service tap is now supplying both the boiler and the fire (Fig.4).

4. Purge the air from the gas supply pipe and check for gas soundness (BS 6891).

5. To light the fire burner - fit the fire control knob, and ensure that it is fully clockwise. Push in and turn anti-s clockwise to operate the igniter. Repeat until the pilot lights. Continue to hold in the control knob for a further 15 seconds. Release slowly and the pilot should stay alight. If the pilot does not stay alight turn the control knob to the OFF position fully clockwise and repeat.

6. Check that the fire burner lights smoothly by pushing in the knob and turning fully anti-clockwise. Test for gas soundness with leak detection fluid.

7. Check the fire pressure with the control knob in position 3 fully anti-clockwise. The pressure should be 14.5mbar ±0.5mbar (5.8 in. wg. ± 0.2 in. wg.).

8. Turn the control knob clockwise to the OFF position (●). Remove the pressure gauge and refit the pressure test point sealing screw, ensuring a gas tight seal.

9, Test for clearance of flue products as follows:
   (a) Ensure that all doors and windows are closed.
   IMPORTANT NOTE: If there is an extractor or ceiling fan in the room or adjoining room then the spillage test must be performed with the fan turned on and any interconnecting doors between the fan and the appliance left open.
   (b) Turn on the fire (position 3 fully anti-clockwise).
   (c) After 5 minutes take a smoke match and insert it into the boiler draught diverter in the position shown (Fig.8). If the majority of the smoke is not drawn into the chimney spillage is indicated and the fire must be operated for a further 10 minutes before rechecking. If spillage is still evident the cause must be ascertained and rectified before continuing with commissioning.
   (d) Repeat with both fire and boiler alight, having run the boiler for 5 minutes.

10. Fit the case as follows:
   (a) Remove the control knob.
   (b) Lift the outercase over the heat exchanger and locate the two 'vee' notches in the top of the case into the 'vee' notches at the top of the inner case (Fig.5).
   (c) Secure the outercase to the inner case using the two securing screws provided (Fig.6).

11. Plug in the electrical supply to the case and fit the controls cover panel and control knob (Fig.13).

12. Check the operation of the light effect by operating the switch adjacent to the control tap (Fig.9).

13. Hand the user the User's Instructions, explain the operation of the boiler and fire and leave the unit set to suit their requirements.

14. Leave these instructions with the gas meter.

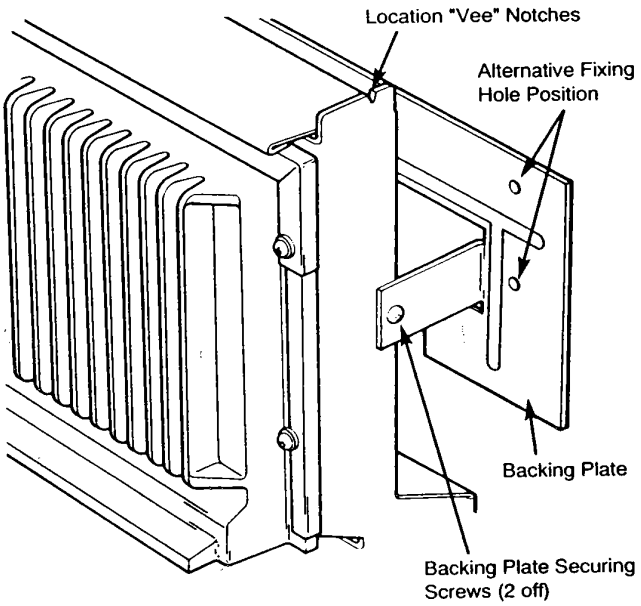

Fig. 5 Backing Plate

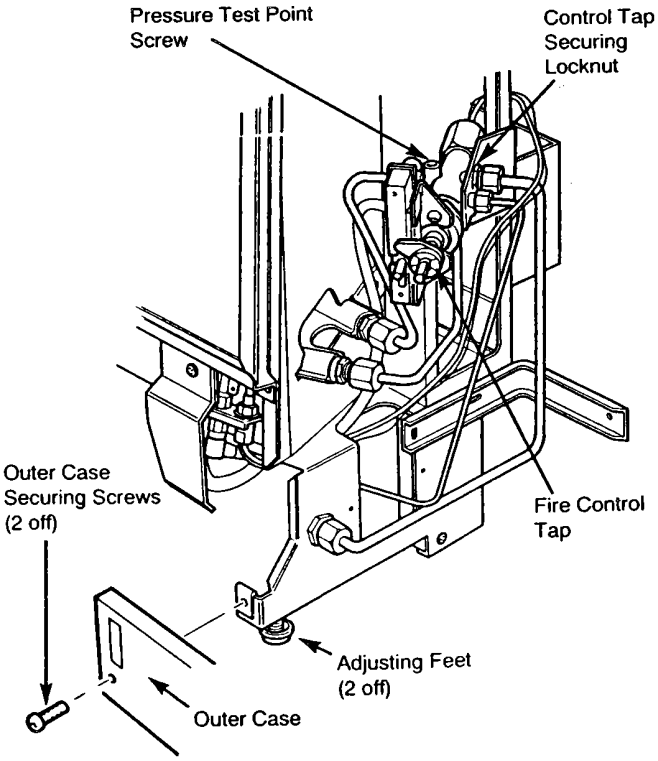

Fig. 6 Commissioning the Fire

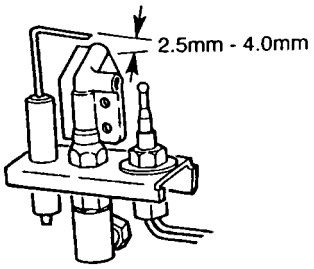

Fig. 7 Spark Gap

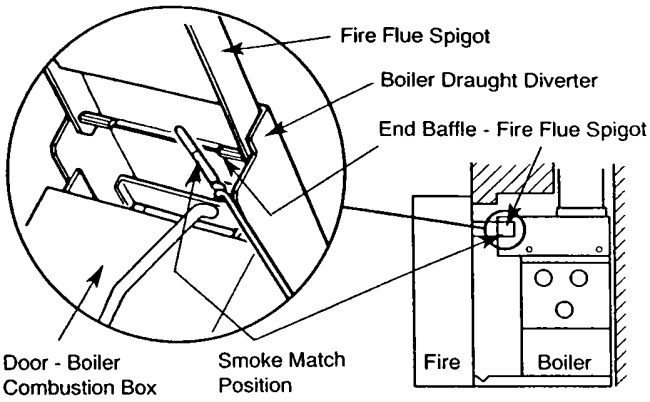

Fig. 8 Spillage Test

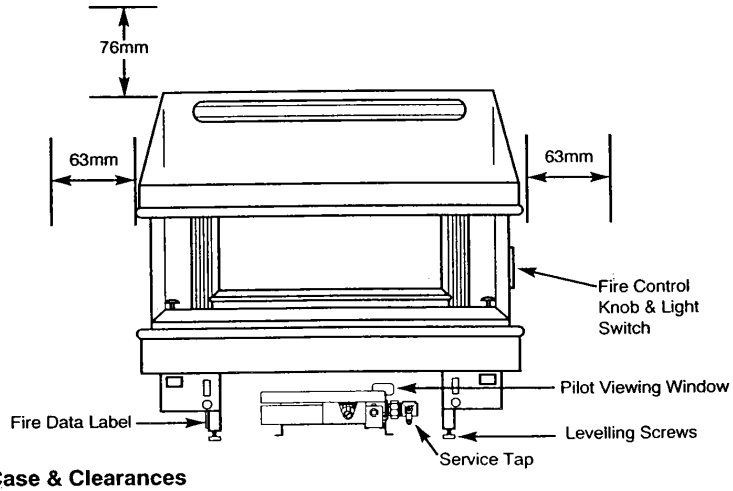

Fig. 9 Outer Case & Clearances

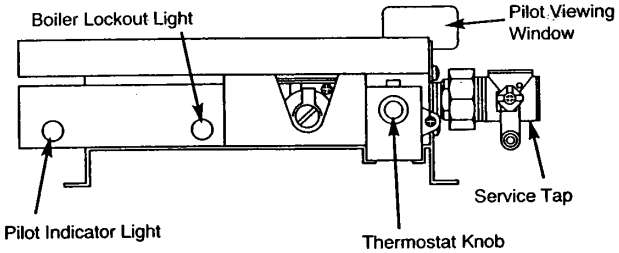

Electronic Controls Boiler

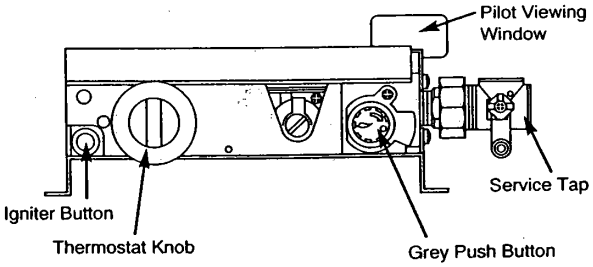

Manual Controls Boiler

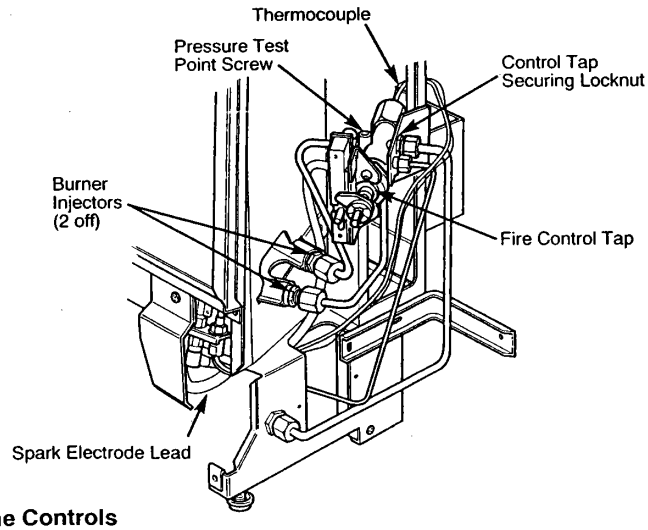

Fig. 10 The Controls

Servicing the Fire – Page 7

CAUTION: ISOLATE THE ELECTRICAL SUPPLY INCLUDING THE PERMANENT LIVE. TURN OFF THE GAS SUPPLY, ENSURE THAT THE FIRE IS COLD, TEST FOR GAS SOUNDNESS UPON RE-ASSEMBLY.

Please read the Important Information Section on page 3. Instructions 1-17 are for servicing to be carried out annually and should be followed in conjunction with the separate instructions for the boiler section.

1. Remove the controls cover panel under the front of the fire by grasping it firmly by its edges and pulling forwards.
2. Disconnect the 3 pin plug from the socket under the fire.
3. Remove the outercase as follows:
  (i) Pull off the control tap knob.
  (ii) Remove the 2 outercase securing screws (Fig.6).
  (iii) Remove the case by easing the lower edge forward and then lifting upward.
4. Turn off the gas service tap by turning fully clockwise (Fig.4).
5. Disconnect the fire supply pipe from the fire inlet and remove the 2 screws securing the backing plate to the inner case. Pull the fire forward until the fire spigot is clear of the boiler canopy and lift away.
6. Remove the glass front panel as follows: (Fig.11).
  (i) Ensure that the glass front panel is cold.
  (ii) Disengage the front panel retaining clamps and remove the glass front panel.
7. Remove the coal bed by carefully lifting it away from the locating pins (Fig.11).

CAUTION: The coal bed is extremely fragile and must be handled accordingly. Gloves should be worn and any inhalation of the dust should be avoided. Keep the coals away from children at all times.

8. Remove the burner as follows: (Figs.10 and 11).
  (i) Disconnect the compression nuts from the injectors.
  (ii) Remove the 2 screws securing the burner, and remove the burner out over the support bar.
  (iii) Using a soft brush remove all deposits from the top of the burner and the burner ports.
9. Remove and clean or replace the injectors as necessary. Do not use a pin or wire for cleaning purposes.
10. Clean any lint or debris from the pilot aeration hole. Inspect the pilot, thermocouple and electrode assembly for deterioration and replace if necessary. No adjustment of the A.S.D. pilot assembly is possible. The A.S.D. should not be altered to prevent it operating correctly or bypassed in any way. If the A.S.D. has to be replaced only use a Genuine Baxi Spare Part.
11. Replace the parts in reverse order of dismantling, make sure that:
  (i) The spark gap is as in Fig. 7.
  (ii) The coal bed is correctly fitted over its locating pins.
  (iii) The glass front panel sealing rope is replaced if it is in anyway damaged.
  (iv) The glass front panel is replaced if it is in anyway damaged or cracked.

NOTE: THIS IS A HEAT RESISTANT GLASS AND MUST NOT BE REPLACED BY ORDINARY GLASS

12. After servicing the boiler, fit the fire to the boiler and refit the screws securing the fire backing plate to the inner case. Connect the fire supply pipe to the inlet adapter.
13. Turn the service tap ON by turning fully anti-clockwise. (Gas to boiler and fire). Check for gas soundness.
14. Temporarily fit the control knob and light the fire. Check that the gas pressure is correct. (See Commissioning the Fire.)
15. Test for clearance of flue products as follows: See paragraph 9 (Commissioning the Fire).
16. Refit the outercase, control knob, 3 pin plug, case securing screws and controls cover plate.
17. Re-check that the ignition is satisfactory.

Changing Components – Page 8

CAUTION: ISOLATE THE ELECTRICAL SUPPLY INCLUDING THE PERMANENT LIVE, TURN OFF THE GAS SUPPLY, ENSURE THAT THE FIRE IS COLD, AFTER REPLACING ANY COMPONENTS ALWAYS TEST FOR GAS SOUNDNESS.

Please read the Important Information Section on page 3.
Replace all components in the reverse order of dismantling. If necessary re-light the boiler pilot.
Remove the outercase and turn off the gas service tap as described in 1 - 4 of 'Servicing the Fire'.
The following components can be removed as described below:

1. GAS CONTROL TAP/FFD (Fig.12)

(a) To grease the tap proceed as follows: Pull off the plastic cap and disconnect the spark electrode lead from the piezo unit. Undo the two screws and washers securing the niting plate to the tap body. Remove the piezo unit complete with the gas tap spindle and spring. Remove the plug and apply a suitable grease sparingly (Excessive grease may block the gasways).

On re-assembling care must be taken to ensure that both the plug and spring are in place.

(b) To exchange the component: (Fig. 10). Pull off the plastic cap and disconnect the spark electrode lead from the piezo unit. Disconnect the four pipes at the gas tap. Disconnect the thermocouple from the gas tap. Remove the 3 screws securing the gas tap bracket to the inner case and remove the complete assembly. Remove the locknut holding the gas tap to the bracket or innercase and remove the gas tap.

On re-assembly ensure that the spark electrode lead is correctly fitted and that the plastic cap is pushed on to the piezo unit.

2. GLASS FRONT PANEL (Fig.11)

(a) Ensure that the glass front panel is cold.
(b) Disengage the front panel retaining clamps and remove the glass front panel.

NOTE: THIS IS A HEAT RESISTANT GLASS AND MUST NOT BE REPLACED BY ORDINARY GLASS

On re-assembly ensure that:
The glass front panel sealing rope is replaced if it is in anyway damaged.

3. SEALING ROPE (Glass Front Panel) (Fig.11)
Remove the glass front panel as described above. Carefully pull off the sealing rope from the retaining barbs on the combustion chamber. On re-assembly ensure that the sealing rope is securely fitted onto the retaining barbs.

4. COAL BED (Fig.11)
Remove the glass front panel as described above. Remove the coal bed by carefully lifting it away from the locating pins. On re-assembly ensure that the coal bed is correctly located over the locating pins.

CAUTION: The coal bed is extremely fragile and must be handled accordingly. Gloves should be worn and any inhalation of the dust should be avoided. Keep the coals away from children at all times.

5. BURNER (Figs.10& 11)

(a) Remove the glass front and coal bed as described above.
(b) Disconnect the compression nuts from the injectors and remove the injectors.
(c) Remove the two screws securing the burner and draw the burner out over the support bar.

6. PILOT/A.S.D. ASSEMBLY (Fig. 12a)
WARNING: The A.S.D. pilot assembly must not be adjusted in any way. The A.S.D. must not be altered so that it will not operate or be bypassed in any way. The thermocouple cannot be changed as an individual -component. The complete assembly must be replaced in the event of one or other component failure(s). Only use a Genuine Baxi Spare Part.

Undo the screw retaining the pilot shield and remove the shield.
Pull back the sleeve and disconnect the lead from the electrode.
Undo the nut on the pilot feed pipe.
Remove the screw holding the assembly to the bracket.
Undo the thermocouple from the gas tap. Remove the assembly from the fire.
On re-assembly, shape the thermocouple in a similar manner to the original.

7. ELECTRO-MAGNET UNIT (Figs 10 & 12)

(a) Remove the gas tap as explained in 1(b).
(b) Remove the electro-magnet retaining nut and withdraw the electro-magnet unit.

8. PIEZO UNIT (Fig.12)
Pull off the plastic cap and disconnect the spark electrode lead from the piezo unit. Undo the tabs on the rear of the piezo unit and remove. Replace the piezo unit twisting the tabs to retain it firmly in position. Re-connect the spark electrode leads and re-fit the plastic cap.

9. LIGHT SWITCH
Caution: Ensure electrical supply is isolated. Pull off the two flag terminals from the switch. Press together the retaining arms on the rear of the switch and remove the switch. Replace the switch and terminals, see illustrated wiring diagram.

10. RESISTOR

(a) Check that the electrical supply is isolated.
(b) Remove the two screws securing the light bulb cover and lift upwards.
(c) Remove the clip securing the resistor to the cover and disconnect the 2 wires.
(d) Replace the resistor and reassemble in reverse order.

Appliance Details – Page 9

BERMUDA SL3 (see page 6, Fig.9 for clearances)	Height - 706mm (to hearth) Width - 696mm Depth - 317mm Weight - 34kg (unpacked)
HEAT INPUT	5.70kW (19,450 Btu/h)
HEAT OUTPUT	3.6gkW (12,590 Btu/h)
GAS GROUP	G20 (Natural Gas)
INJECTOR SIZE	230 F11
SETTING PRESSURE (Cold)	14.5± 0.5mbar (5.8 ± 0.2in wg)
THERMOCOUPLE OUTPUT	9.4 - 1 3mV

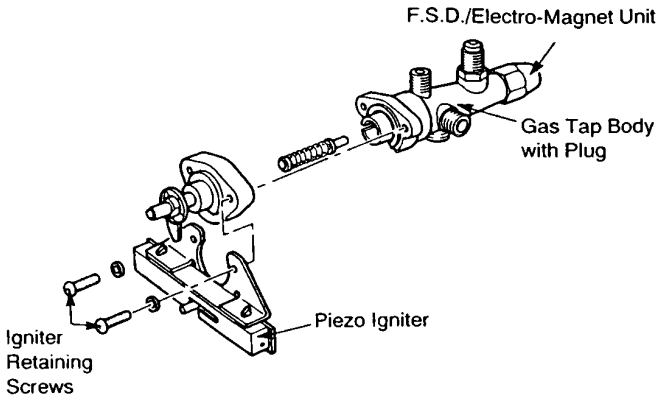

Fig. 12 Gas Control Tap/Flame Failure Device

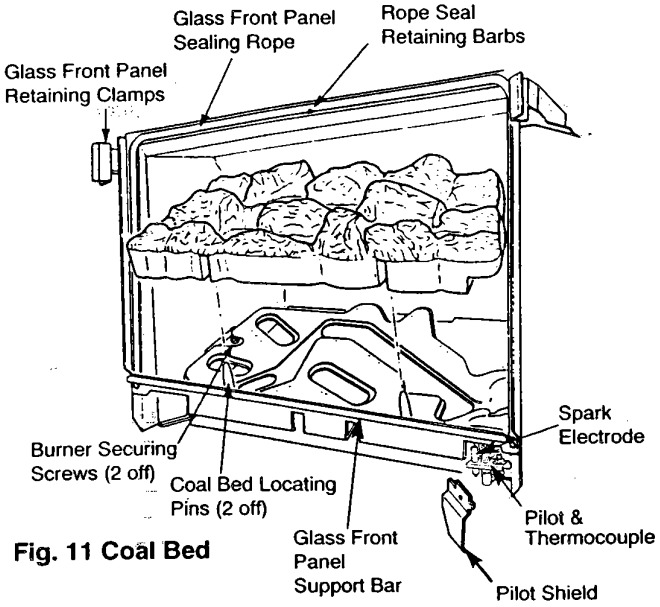

Fig. 11 Coal Bed

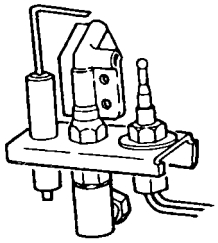

Fig. 12a Pilot/A.S.D. Assembly

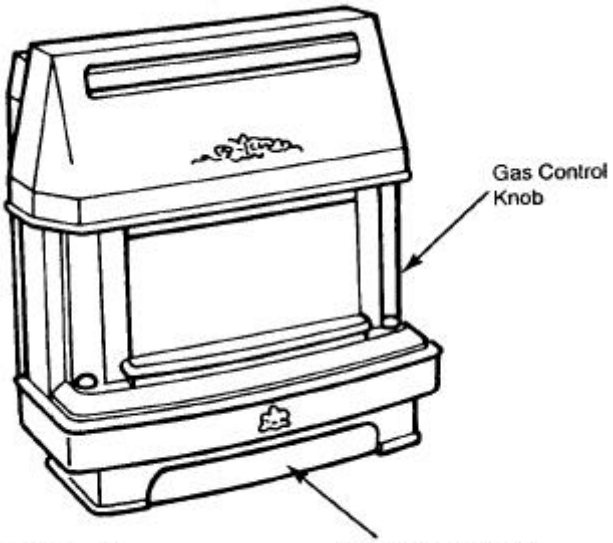

Fig. 13 The Fire

ault Finding Chart - Page 10 - 11

AXI BERMUDA SL3 Gas Type G20 (Natural Gas)

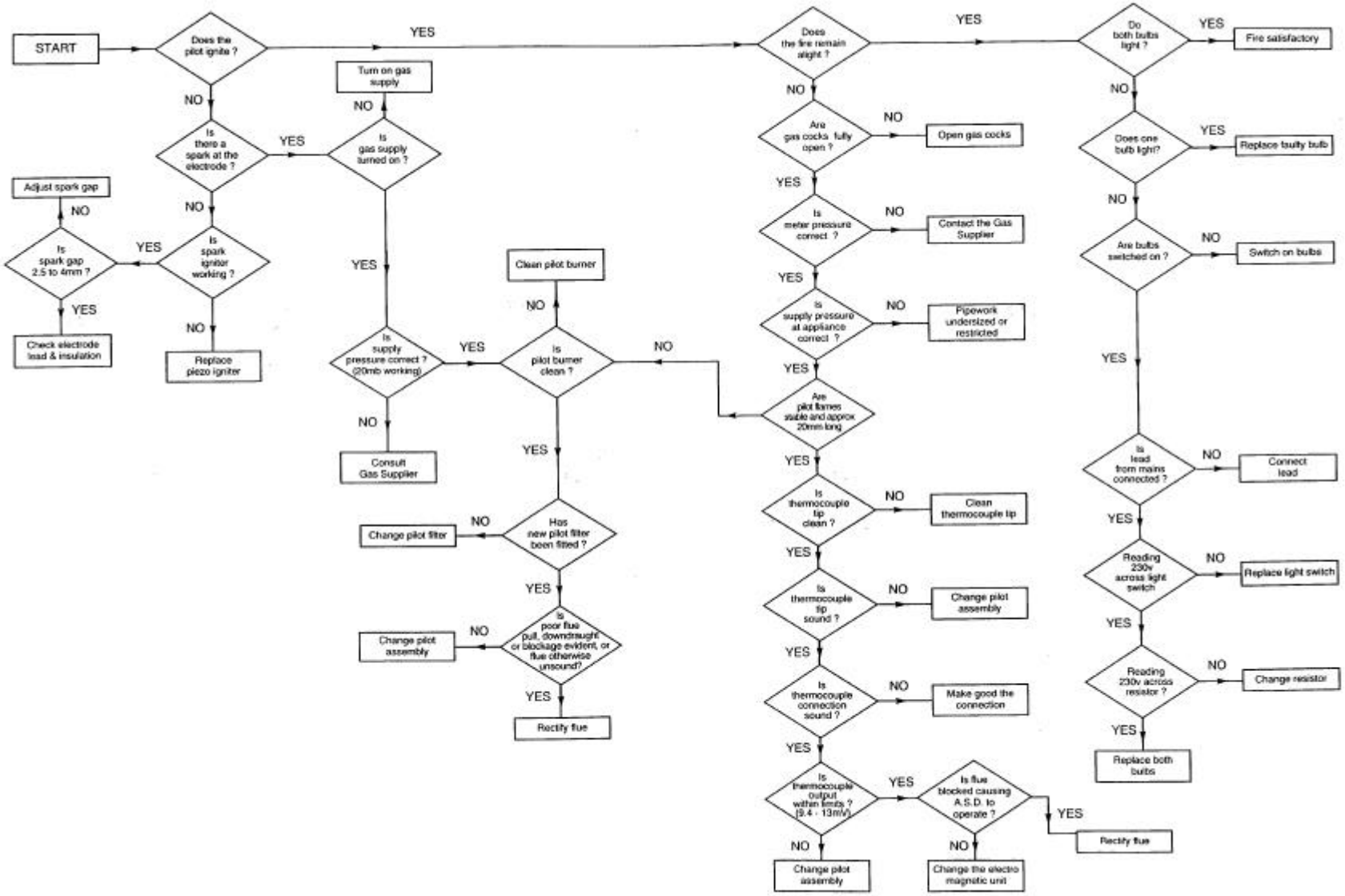

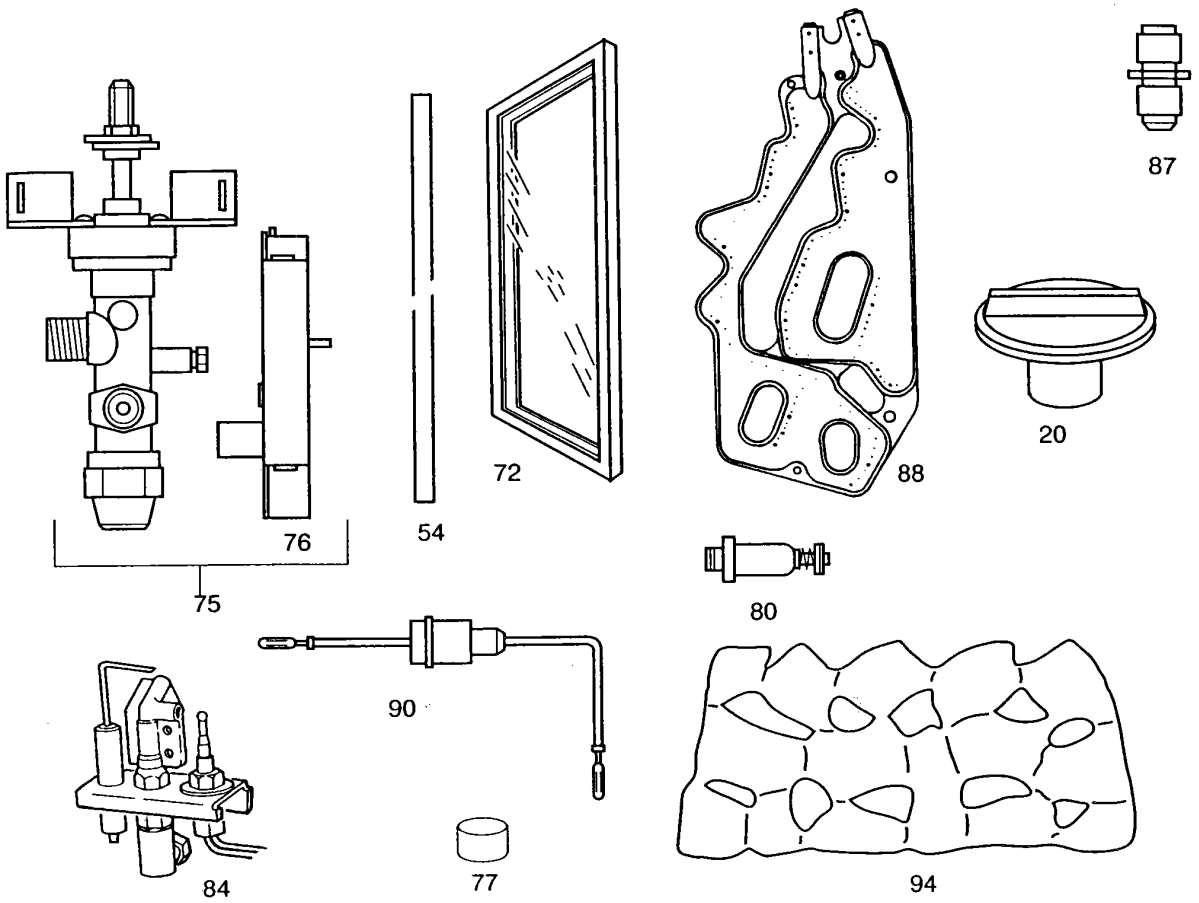

BAXI BERMUDA SL3
B.G.C. No 37 077 60

Key No	Description	G.C. No	Manufact'rs Part No
54	Seal - Glass Frame	155 747	043111
72	Glass & Frame Assembly	155 758	040955
20	Knob - Gas Tap Control	156 430	234544
75	Flame Failure Device/Gas Tap Concentric TE/SA 809	378 916	238966
76	Piezo Unit	393 734	042941
80	Encapsulated Unit Concentric TE/41 8	384 248	082462
87	230 F11 Injector	381 879	092133
88	Burner – Aeromatic Baxi Special	155 949	043210
90	Lead - Electrode	378 911	236209
94	Coal Bed	156 429	235149
77	Pilot Filter	205 723	082412
84	Pilot / A.S.D.Assembly	378 914	236204

Renewal Firefront – Page 13

It is important that the existing installation is correct and that the flue is performing satisfactorily. Any remedial work necessary should be completed before the new appliance is commissioned. Please read the Important Information Section on page 3.

WARNING: When a renewal firefront is installed with a Bermuda 401, 552, 45/3 or 57/3 which does not have an Atmospheric Sensing Device filled the combined appliance will not shut down under adverse flue conditions. (When the fire is used without the boiler on, the Atmospheric Sensing Device will operate).

NOTE: A permanent live is required for correct operation of the firefront.

Additional Installation Instructions

Bermuda SL3 Renewal G.C.No 37 075 02A

The kit supplied with Renewal appliances provides all the necessary components to fit a Baxi Bermuda SL3 Renewal firefront to the following Bermuda Boilers.

The Renewal Fires may be used with the following Boilers:

Bermuda 401	G.C.No 44 077 49
Bermuda 552	G.C.No 44 077 50
Bermuda 45/3 M	G.C.No 44 077 61
Bermuda 45/3 E	G.C.No 44 077 60
Bermuda 57/3 M	G.C.No 44 077 63
Bermuda 57/3 E	G.C.No 44 077 62
Bermuda 45/4 M	G.C.No 44 077 71
Bermuda 45/4 E	G.C.No 44 077 73
Bermuda 57/4 M	G.C.No 44 077 72
Bermuda 57/4 E	G.C.No 44 077 74

Existing Fire – Page 13

REMOVING THE EXISTING FIRE

Isolate the gas and electrical supply, including any permanent live, to the combined appliance. Remove the controls cover panel from the front of the fire.

Remove the tap control knob. Disconnect the electrical socket from the fire plug if fitted. Remove the screws securing the outercase to the innercase. Lift off the outercase.

Turn the gas service tap to the “Boiler only” position by turning ¼ turn clockwise.

Remove the radiants if fitted.

Disconnect the supply pipe at the fire inlet.

Remove any screws securing the fire to the wall. Pull the fire forward until the flue spigot is clear of the boiler hood and lift away.

Remove and discard the fire supply pipe from the service gas tap. Disconnect and discard any electrical wiring between the boiler input terminal and the fire.

Boiler Modification

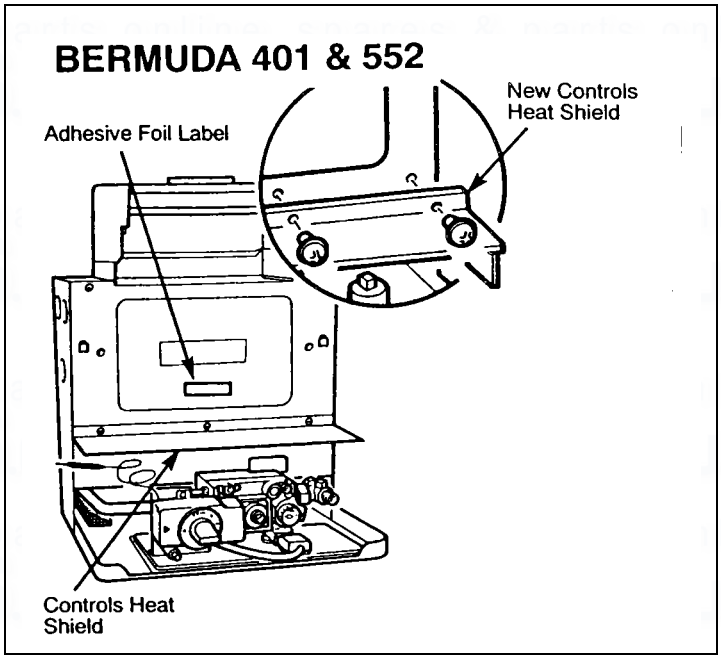

NOTE: It Is Important at this stage to fit the controls heat shield supplied with the fire unit to the boiler front panel.

Remove and discard the controls heat shield provided with the boiler and fit the new controls heat shield using the screws previously removed.

Check the data badge on the back boiler. If the boiler internal wiring is not depicted, take the foil label from the kit and attach it below the data badge art the boiler front door.

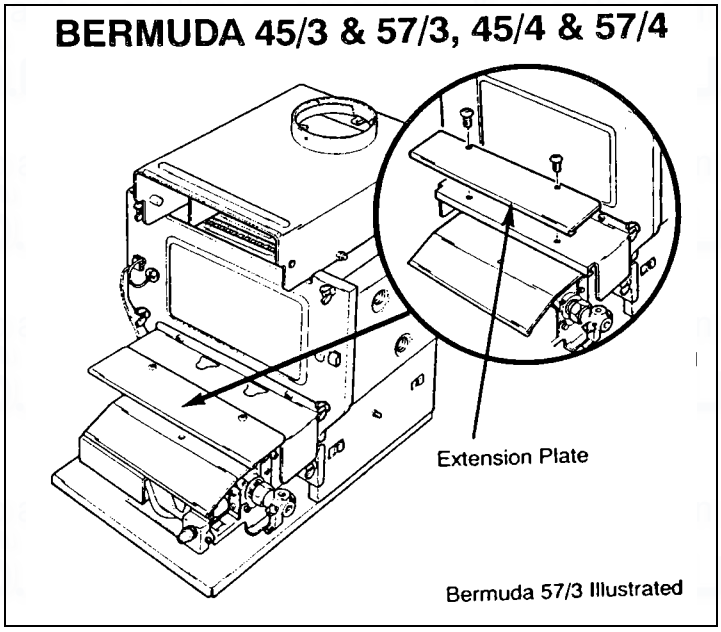

If a radiant firefront has been installed previously it will be necessary to unscrew and remove the extension plate from the boiler controls heat shield. Once removed this item can be discarded.

If the fire is wall mounted remove and discard the existing support frame (Bermuda 401 only). Retain the two support brackets. These will be needed in wall mounting the renewal fire.

If the fire is hearth mounted ensure that the base of the builders opening and the front hearth are at the same level.

Refer to “Site Requirements” (page 3) and prepare the wall surface to the dimensions described.

WALL FIXING

Two wall fixing plates are supplied in the Renewal Kit, one for Bermuda 401/552 and one for Bermuda 45/3, 57/3. 45/4 & 57/4.

BERMUDA 401 & 552

Take the fire support plate from the fire unit packaging and loosely attach it beneath the boiler base protruding from the fireplace opening using the M5 Nuts and screws provided. Use the centre group of holes at each side.

NOTE: If the fire is being used with a Bermuda 401 boiler unit, the support brackets from the previous plate must be fitted before the fire support plate can be fixed in place.

Push the support plate backwards until it touches the surround or wall face and tighten the screws to lock it in position.

BERMUDA 45/3 & 57/3, 45/4 & 57/4

Take the fire support plate from the fire unit packaging and loosely attach it above the boiler base protruding from the fireplace opening using the screws provided. Use the slots at each side.

Push the support plate backwards until it touches the surround or wall face and tighten the screws to lock it in position.

WIRING

When connecting the firefront wire to the plug on the boiler base tray refer to page 3 of these instructions.

FIRE SUPPLY PIPE

Two fire supply pipes are supplied in the Renewal Kit, one for Bermuda 401 & 552 and one for Bermuda 45/3 & 57/3, 45/4 & 57/4 The smaller (6mm) diameter one is for Bermuda 45/3 & 57/3, 45/4 & 57/4 installations.

TO CONTINUE FITTING THE FIREFRONT REFER TO THE INSTALLATION CHAPTER OF THESE INSTRUCTIONS.

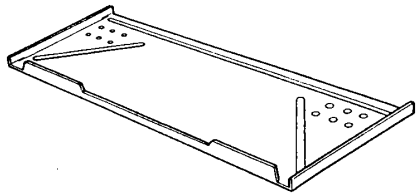

Fire Support Plate - Bermuda 401 & 552

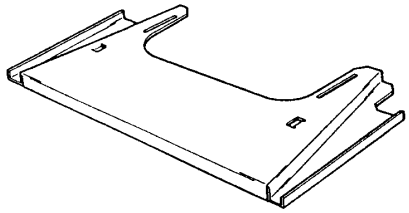

Fire Support Plate - Bermuda 45/3 & 57/3

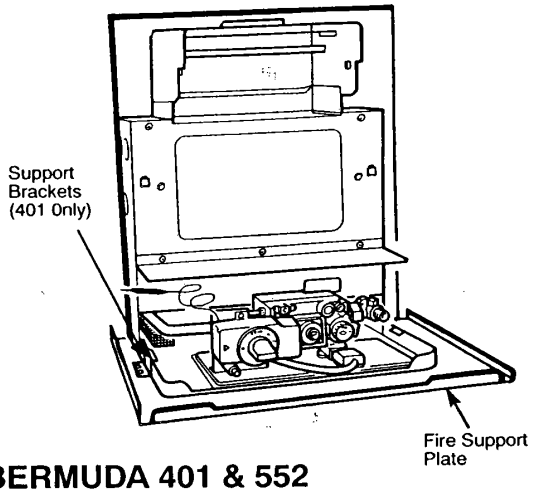

BERMUDA 401 & 552

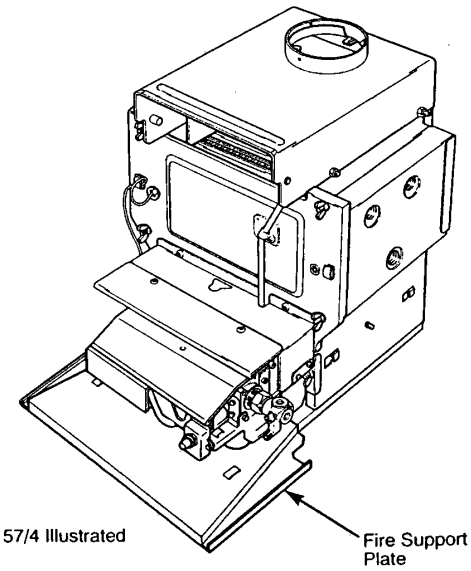

BERMUDA 45/3 & 57/3, 45/4 & 57/4

The following spares components differ from Natural Gas models.

Bermuda SL3 Propane

Description	G.C.N°	Manufact'rs Part N°
Flame Failure Device/Gas Tap Concentric TE/SA 916	E01-143	237100
Injector - Fire Propane - P 100	378 856	092089
Burner - Aeromatic - Propane	E01-145	237209
Pilot / A.S.D. Assembly	E01-152	237810
Coal Bed - Propane	E01-144	237221
Pin Coal Bed Locating/Burner Securing	156 097	092125

Click here for Helplines

Propane Cat II 2H3P

Supplementary Instructions

BERMUDA SL3 PROPANE
G.C.N0 3707770

GASTYPE G31

This section details the differences between Natural Gas and Propane models.

Propane firefronts are only suitable for use with Bermuda 553 Propane Back Boiler appliances. The• instructions supplied with the back boiler contain details of gas supply requirements and electrical connections.

All site requirements and installation details can be found earlier in this booklet.

NOTE: When removing the burner it is necessary to remove the right hand retaining screw and the left hand coal bed retaining pin which also retains the burner.

Propane appliances can be converted to operate on Natural Gas if required. A conversion kit. is available, Baxi Part N'~ 247065.

Heat Input	5.64kW (19,243 Btu/h)	
Gas Group	G31 (Propane)	
Injector Marking	P 100	
Supply Pressure	37.0mbar	14.8in wg
Setting Pressure (Cold)	35.0 ± 1.7mbar	14.0 ± 0.7in wg