Baxi Bermuda SP3/VP3

Please leave these instructions with the User.

Fireside Gas Central Heating Unit

Comp N° 237568 Iss 7 - 5/00

Installation and Servicing Instructions

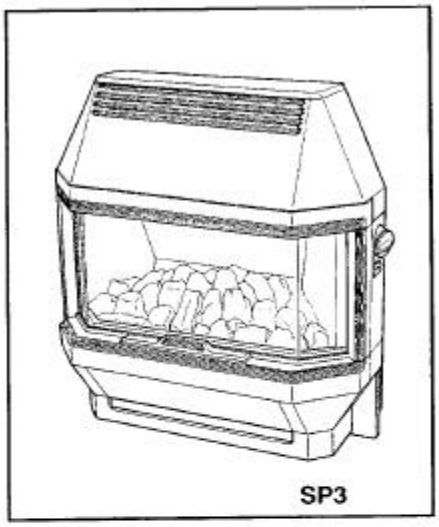

BAXI

Natural Gas
Baxi Bermuda SP3
G.C.No. 37 077 63

Baxi Bermuda VP3
G.C.No. 37 077 62

For use with the following boilers:

Baxi Bermuda 45/4 M
G.C.No. 44 077 71
Baxi Bermuda 45/4 E
G.C.No. 44 077 73
Baxi Bermuda 57/4 M
G.C.No. 44 077 72
Baxi Bermuda 57/4 E
G.C.No. 44 077 74

Propane Gas
Baxi Bermuda VP3 Propane
G.C.No. 37 077 72

For use with the following boiler:

Baxi Bermuda 553 Propane
G.C.No. 44 077 75

Renewal
Baxi Bermuda SP3 Renewal
G.C.No. 37 075 05A

Baxi Bermuda VP3 Renewal
G.C.No. 37 075 04A

For use with the following boilers:

Baxi Bermuda 401
G.C.No. 44 077 49
Baxi Bermuda 552
G.C.No. 44 077 50
Baxi Bermuda 45/3 M
G.C.No. 44 077 61
Baxi Bermuda 45/3 E
G.C.No. 44 077 60
Baxi Bermuda 57/3 M
G.C.No. 44 077 63
Baxi Bermuda 57/3 E
G.C.No. 44 077 62
Baxi Bermuda 45/4 M
G.C.No. 44 077 71
Baxi Bermuda 45/4 E
G.C.No. 44 077 73
Baxi Bermuda 57/4 M
G.C.No. 44 077 72
Baxi Bermuda 57/4 E
G.C.No. 44 077 74

Baxi UK Limited is one of the leading manufacturers of domestic heating products in the UK.

Our first priority is to give a high quality service to our customers. Quality is built into every Baxi product - products which fulfil the demands and needs of customers, offering choice, efficiency and reliability.

To keep ahead of changing trends, we have made a commitment to develop new ideas using the latest technology - with the aim of continuing to' make the products that customers want to buy.

Baxi is also the largest manufacturing partnership in the country. Everyone who works at the company has a commitment to quality because, as shareholders, we know that satisfied customers mean continued success.

We hope you get a satisfactory service from Baxi. If not, please let us know.

CE

Baxi is a BS-EN ISO 9001
Accredited Company

CONTENTS – Page 3

Introduction	**PAGE 4**
Technical Data	**PAGE 5**
Site Requirements	**PAGE 6**
	Fireplace Opening Ventilation Hearth Mounting Wall Fixing
Installation	**PAGE 7-13**
	Initial Preparation Electrical Connections Gas Supply Fitting the Fire
Commissioning the Fire	**PAGE 14-16**
	Spillage Detection
Fitting the Outer Case	**PAGE 17-18**
	Bermuda VP3 Bermuda SP3
Annual Servicing	**PAGE 19-23**
	Cleaning the Pilot / A.S.D. Assembly Cleaning the Burner / Injectors
Changing Components	**PAGE 24-31**
	Glass Frame Frame Sealing Rope Coal Bed Burners and Injectors Light Switch Electrode Lead Spark Generator Resistor Pilot / ASD Assembly Electro-Magnetic Unit Control Tap and Micro-switch
Fault Finding	**PAGE 32-33**
Short Parts List	**PAGE 34**
Propane - IMPORTANT	**PAGE 35**
Read this section before installing propane appliances	Supplementary Instructions Burner Removal Burner Replacement
Renewal Firefront	**PAGE 36-37**
	Supplementary Kit Instructions Existing Fire Boiler Adaptation

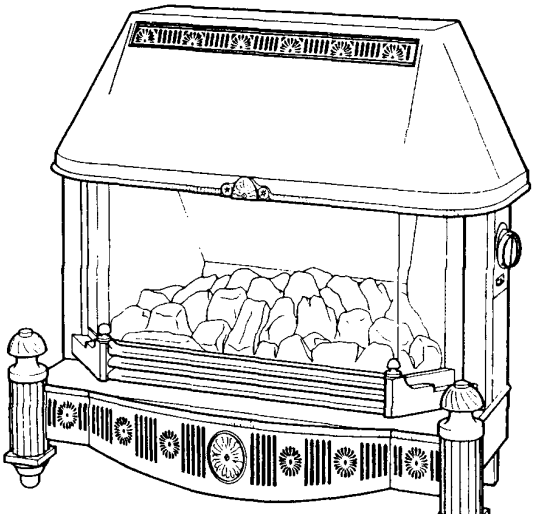

Baxi Bermuda VP3
G.C.N° 37 077 62

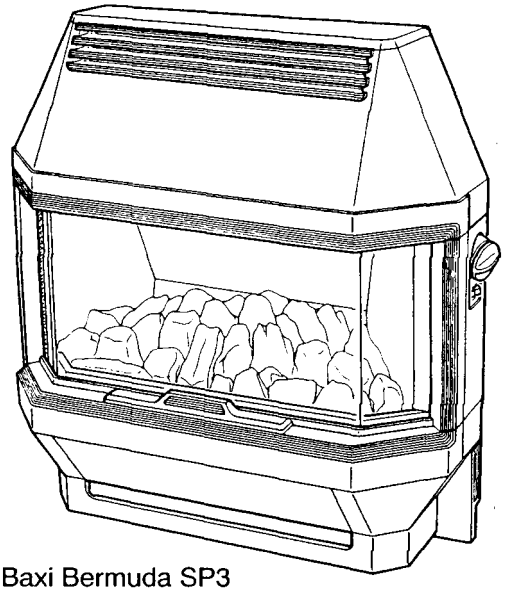

Baxi Bermuda SP3
G.C.N° 37 077 63

NOTICE

DISCOLOURATION OF WALL SURFACES

Most heating appliances generate warm air convection currents and transfer heat to any wall surface against which they are situated.

Some soft furnishings (such as blown vinyl wallpapers) may not be suitable for use where they are subject to temperatures above normal room levels and the manufacturer's advice should be sought before using this type of wall covering adjacent to any heating appliance.

The likelihood of wall staining from convected air currents will be increased in environments where high levels of cigarette smoke or other contaminants exist.

Description

The Baxi Bermuda VP3 and Baxi Bermuda SP3 are combined gas fired central heating boiler and gas fire units, designed for installation in a living room. These boilers and fires are designed to be used on Natural Gas
(For propane see page 35).

The heat input of both fires at their maximum setting is 5.74kW (19,600 Btu/h) with an output of 3.52kW (12,000 Btu/h). Electronic ignition is provided to light the main burner. The fires are controlled by a control knob positioned on the right hand side of the case.

This control knob has six positions giving a choice of five output settings.

Position.	● - OFF
Position	★🔥 - IGNITION/PILOT
Position	1 - LOW
Position	2 - MEDIUM
Position	3- MEDIUM/HIGH
Position	4- HIGH

The artificial coal bed may be illuminated by concealed bulbs as and when required. The light effect is operated by a switch situated below the control knob. It may be used whether the fires are ON or OFF.

Installation

The appliance is suitable for installation only in G.B. & I.E. and should be installed in accordance with the rules in force. For Ireland install in accordance with I.S. 813 "Installation of Gas Appliances". The installation must be carried out by a CORGI Registered Installer or other competent person and be in accordance with the relevant requirements of the GAS SAFETY (Installation and Use) REGULATIONS, the BUILDING REGULATIONS (Scotland) (Consolidation), the LOCAL BUILDING REGULATIONS, the CURRENT I.E.E. WIRING REGULATIONS and bye laws of the LOCAL WATER UNDERTAKING. It should also be in accordance with the relevant BRITISH STANDARD CODES OF PRACTICE.

Important Information

This product contains Refractory Ceramic Fibres (R.C.F.) which are man-made vitreous silicate fibres. Excessive exposure to these materials may cause temporary irritation to eyes, skin and respiratory tract. Care must be taken when handling these articles to ensure the release of dust or fibres is kept to a minimum. To ensure that the release of fibres from these articles is kept to a minimum, during installation and servicing it is recommended that a H.E.P.A. filtered vacuum is used to remove any dust, soot or other debris accumulated in and around the appliance. This should be performed before and after working on the installation. It is recommended that any replaced item(s) are not broken up but sealed within heavy duty polythene bags and clearly labelled 'R.C.F. waste". This is not classified as "hazardous waste" and may be disposed of at a tipping site licensed for the disposal of industrial waste. Protective clothing is not required when handling these articles but it is recommended that gloves are worn and the normal hygiene rules of not smoking, eating or drinking in the work area are followed and always wash hands before eating or drinking.

TECHNICAL DATA – Page 5

Bermuda VP3 (Natural Gas)

Heat Input	High	Med-High	**Gas Connection**	The gas supply is provided from the service cock on the boiler unit.
kW	5.74	4.95		
Btu/h	19,600	16,900		
Heat Input	Med	Low		
kW	3.43	2.07	**Electricity Supply**	230V - 50Hz 3A 120W External fuse - 3A
Btu/h	11 700	7.100		
Heat Output	High			
kW	3.52			
Btu/h	12,000		**Controls**	Rotary gas tap with Atmospheric sensing device. Electronic ignition.
Setting Pressure	Cold			
mbar	12.8 ± 0.5			
in wg	5.12 ± 0.2		**Gas Rate** (after 10 mins)	0.57m^3/h (20.l9ft^3/h)
Thermocouple Output	9.4 - l3mv		**Lifting weight**	27.5 kg (60.6 lbs)
			Outercase Dimensions	Height 689mm Width 703mm Depth 337mm

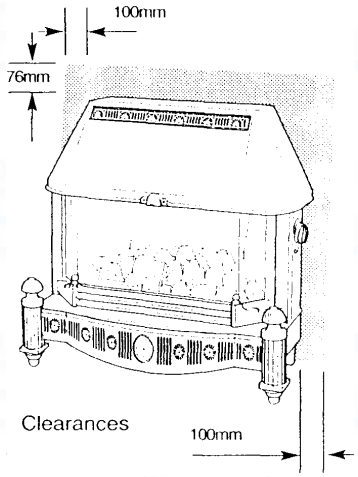

Bermuda SP3 (Natural Gas)

Heat Input	High	Med-High	**Gas Connection**	The gas supply is provided from the service cock on the boiler unit.
kW	5.74	4.95		
Btu/h	19,600	16,900		
Heat Input	Med	Low		
kW	3.43	2.07	**Electricity Supply**	230V - 50Hz 3A 120W External fuse - 3A
Btu/h	11 700	7.100		
Heat Output	High			
kW	3.52			
Btu/h	12,000		**Controls**	Rotary gas tap with Atmospheric sensing device. Electronic ignition.
Setting Pressure	Cold			
mbar	12.8 ± 0.5			
in wg	5.12 ± 0.2		**Gas Rate** (after 10 mins)	0.57m^3/h (20.19ft^3/h)
Thermocouple Output	9.4 - l3mv		**Lifting weight**	27.5 kg (60.6 lbs)
			Outercase Dimensions	Height 689mm Width 680mm Depth 323mm

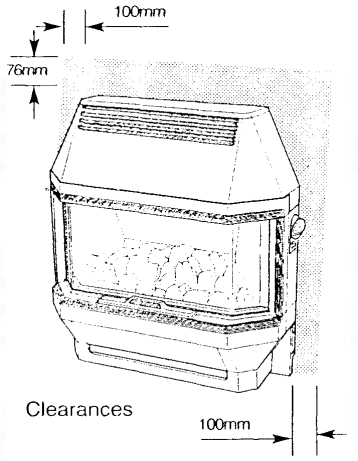

FOR PROPANE TECHNICAL DATA SEE PAGE 35.

B.S. Codes of Practice

WARNING

The addition of anything that may interfere with the normal operation of the appliance (e.g. FLUE DAMPERS, ECONOMISERS etc.) without the express written permission of BAXI UK LIMITED could invalidate the appliance warranty and infringe the GAS SAFETY (Installation and Use) REGULATIONS.

STANDARD	SCOPE
B.S. 6891	Gas Installation.
B.S. 5546	Installation of hot water supplies for domestic purposes.
B.S. 5871	Installation of gas fires, convectors and fire/back boilers.
B.S. 5440: Part 1	Flues.
B.S. 5440: Part 2	Air Supply.
B.S. 6798	Installation of gas fired hot water boilers.
B.S. 5449: Part 1	Forced circulation hot water systems.

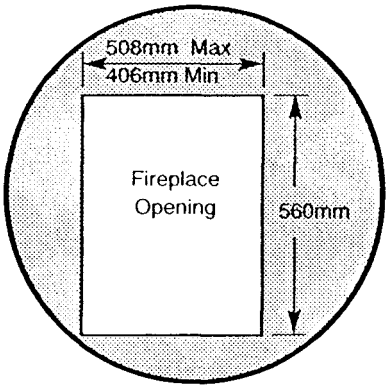

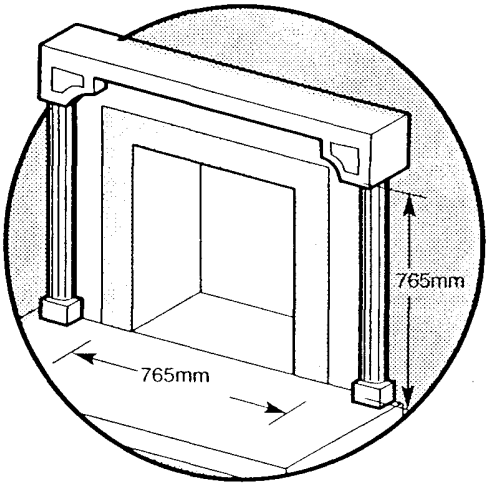

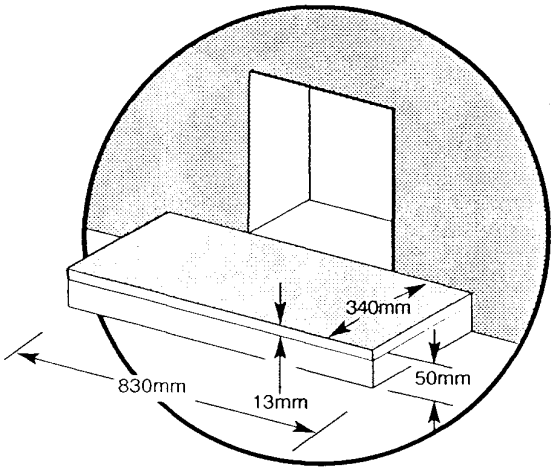

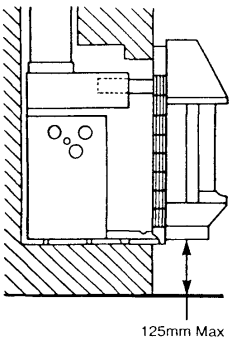

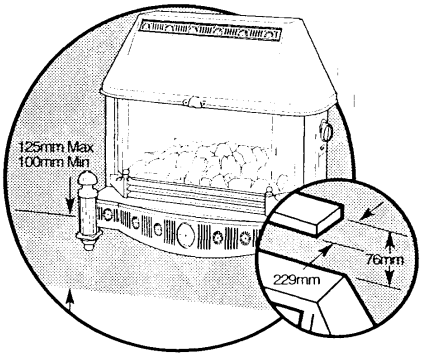

FIREPLACE OPENING

The principal site requirements are determined by the boiler unit, but the following details are essential for the correct installation of the fire unit:

Fireplace Opening:	Height:	560mm (22in)
	Width:	406mm (16in) min
		508mm (20in) max

NOTE: Where possible the fireplace opening should be made to the maximum width i.e. 508mm (20in). The wall behind the fire must be non-combustible.

If a fire surround is to be used, it must have a minimum rating of 100ºC. Any gaps between the wall and the surround must be sealed. The surround or wall must have a flat vertical surface, centrally fixed about the opening measuring a minimum of 765mm ($30^1/_8$ in) high by 765mm ($30\ ^1/_8$ in) wide.

VENTILATION

Ventilation air Supply to BS 5440 Part 2 is required. The permanent ventilation area size requirements are:

SP3/VP3 & 45/4 68.54cm^2 (10.62in^2)
SP3/VP3 & 57/4 89.15cm^2 (13.82in^2)

The permanent vent may be directly into the room containing the appliance. The vent may also be sited in another room provided an interconnecting vent is used. The vent must not be installed inside the builders opening. The vent should be sited following good practice for a habitable room.
We recommend the use of the Stadium BM720 'Black Hole' ventilator which is available from your local merchant.

HEARTH MOUNTING

If the fire unit is to be hearth mounted then the hearth must be of a non-combustible material at least 13mm (½ in) thick and measuring at least 340mm (13 $^3/_8$in) deep by 830mm (32 ¾ in) wide and fitted centrally about the fireplace opening. The top surface of the hearth should be a minimum of 50mm (2in) above floor level and must be level with the base of the builders opening. **On no account should the fire unit be fitted directly onto a combustible floor or carpet**.

WALL FIXING

NOTE: Whilst the Bermuda VP3 is intended to be hearth mounted, it may also be fixed to a wall.

If the fire unit is to be fixed to the wall then it is strongly recommended that the fireplace opening is made to the maximum width i.e. 508mm (20in).

A shelf may be fitted above the fire unit provided that it is not less than 76mm (3in) above the fire canopy and not more than 229mm (9in) in depth. The area between the shelf and the top of the fire must be non-combustible.

Initial Preparation

Unpack the fire unit by removing the polystyrene packing piece complete with fitments and placing to one side, then lift the fire from its box.

Electrical Connections

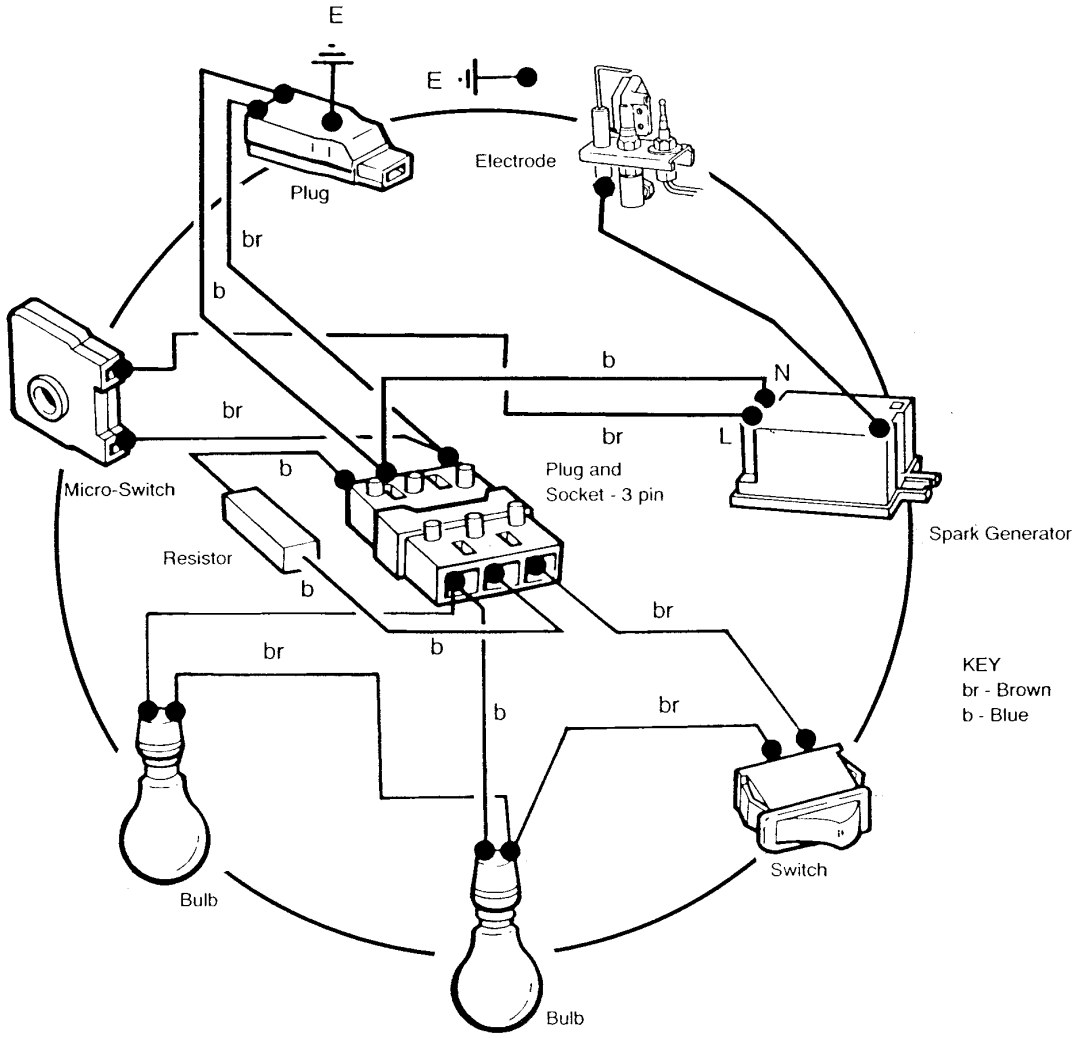

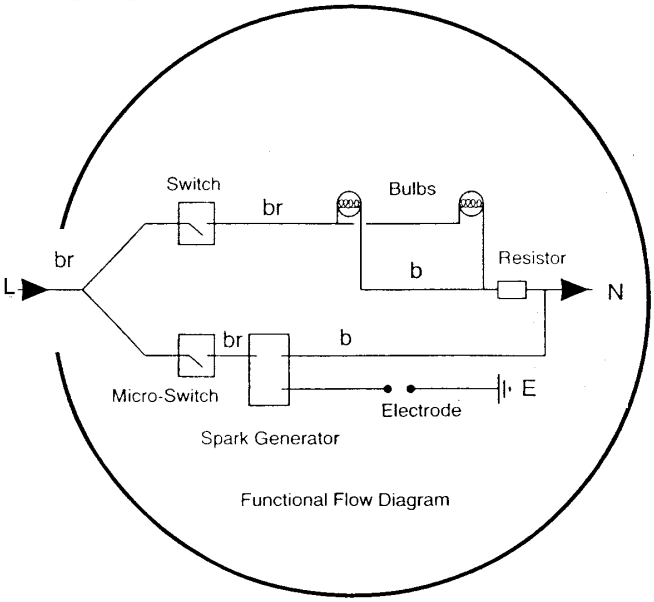

Functional Flow Diagram

Electricity is supplied to the fire unit via the plug-and-cable assembly provided with the appliance.

The cable must be connected to the plug and socket on the boiler base. This connection should be made at the same time as the boiler electrical connections.

NOTE: The method of connection to the electricity supply must facilitate complete electrical isolation of the appliance. Connection may be made via a fused double pole isolator with a contact separation of at least 3mm ($^{1}/_{8}$ in) in all poles and serving the appliance and systems control only (max. fuse rating 3 amp). A permanent electricity supply to the boiler is required.

WARNING

THIS APPLIANCE MUST BE EARTHED. 4 core input cable for connection to the boiler unit must NOT be less than 0.75mm^2 (24 x 0.2mm) PVC heat resistant to 70ºC grade 1 to BS 6500 table 15 or 16.

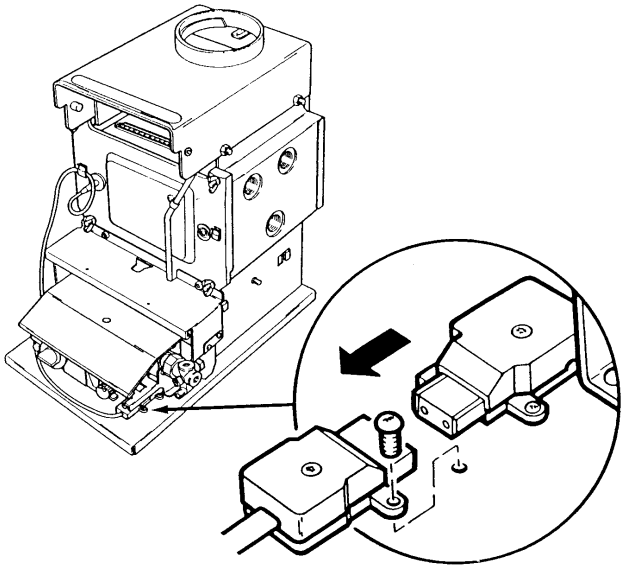

Manual Control Models

If the fire supply cable has not been fitted when wiring the boiler proceed as follows:

Isolate the electrical supply to the boiler including the permanent live.

Remove the boiler controls assembly as described in the boiler Installation and Servicing Instructions.

The socket should be wired as described in the boiler Installation and Servicing Instructions.

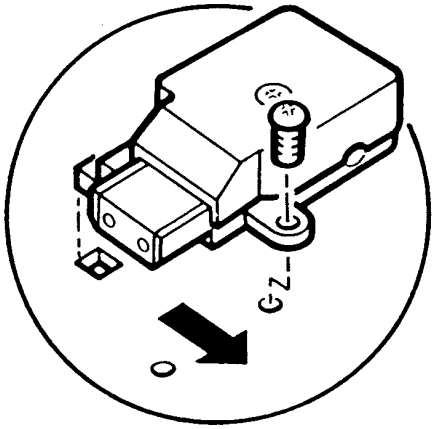

Remove the screw fixing the input socket to the boiler base. Slide the socket to the right, then lift to remove.

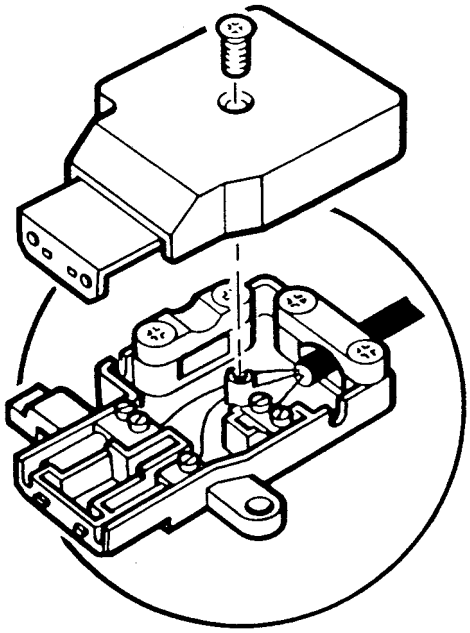

Remove the screw fixing the cover to the socket housing and remove the plastic cover, revealing the terminals and cable clamps and boiler wiring.

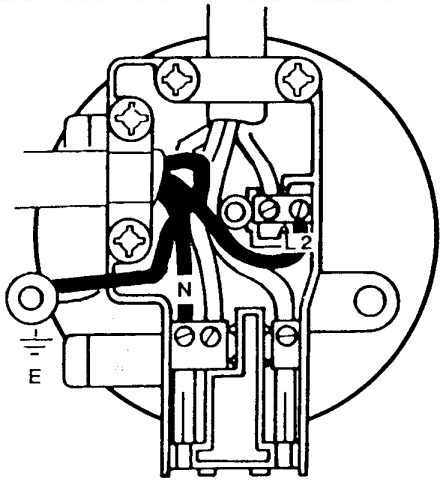

From the plug and cable connection supplied with the fire unit, the following connections should be made, making sure that the appropriate cable clamp is used to hold the cable firmly.

Connect the blue wire (neutral) to the remaining terminal marked ‘N’. Connect the brown wire (permanent live) to the remaining terminal marked ‘L2’. Route the green & yellow wire (earth) through the cut-out in the socket housing and connect it to the earth terminal.

The earth wire should be long enough so that the live and neutral wires will become taut before the earth wire if the cable is pulled.

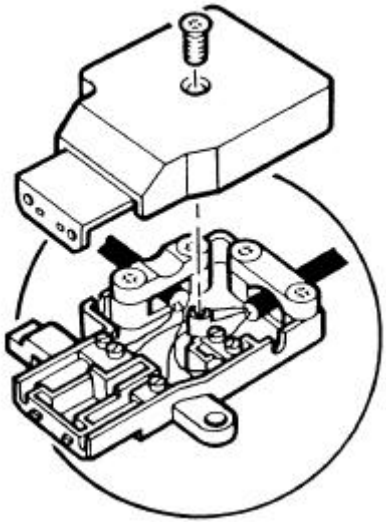

Refit the socket cover and fix in place with the screw.

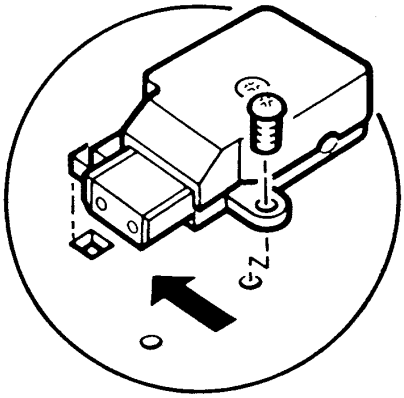

Refit the input socket assembly to the boiler base and fix in place with the securing screw.

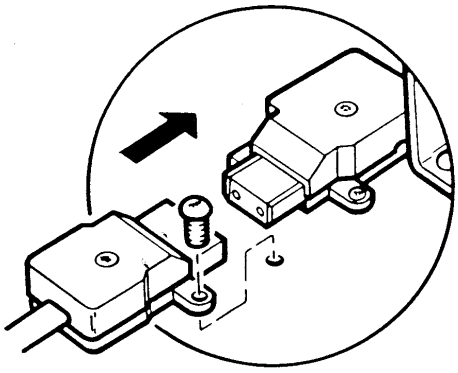

Reconnect the controls connection plug to the input socket and again, fix in place with the securing screw.

Clamp the input cable in place using the appropriate clip.

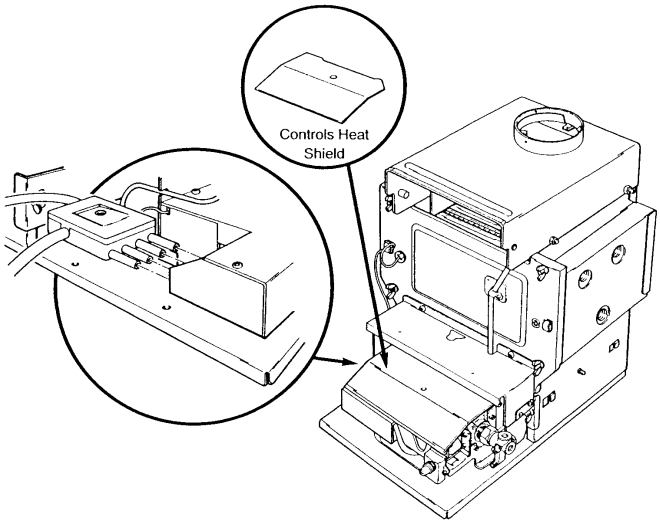

Electronic Controls Models

Remove the controls heat shield from its retaining clips.

Isolate the electrical supply to the boiler, including the permanent live.

Remove the electrical inlet socket from the PCB at the rear left hand side of the control box.

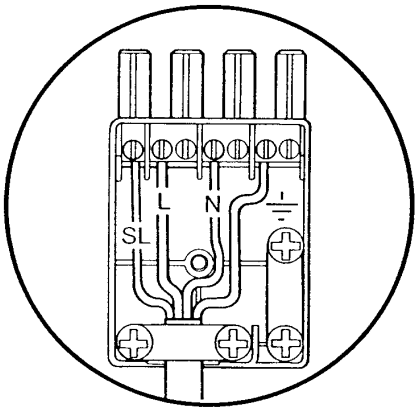

Remove the socket cover. The socket should be wired as described in the boiler Installation and Servicing Instructions.

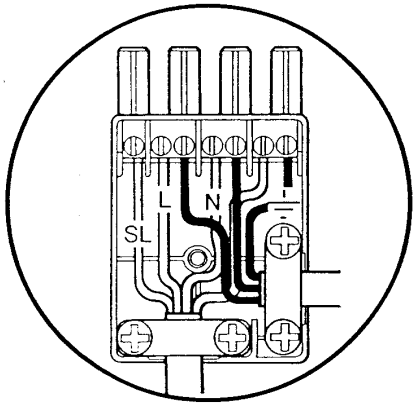

Remove the side cable clamp and connect the wire from the fire front kit as indicated:

Brown (live) to L
Blue (neutral) to N
Green and Yellow (earth) to ⏚

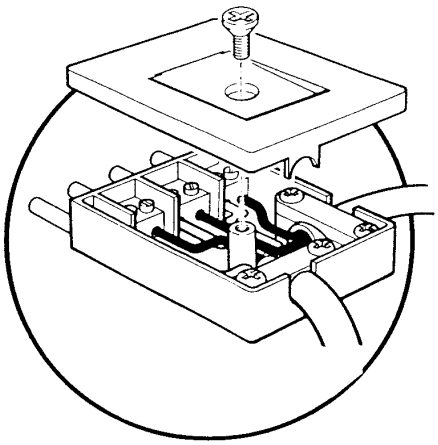

Refit the cable clamp ensuring that the outer insulation is securely held and refit the socket cover.

Ensure that all cables are routed away from the boiler casing and hood.

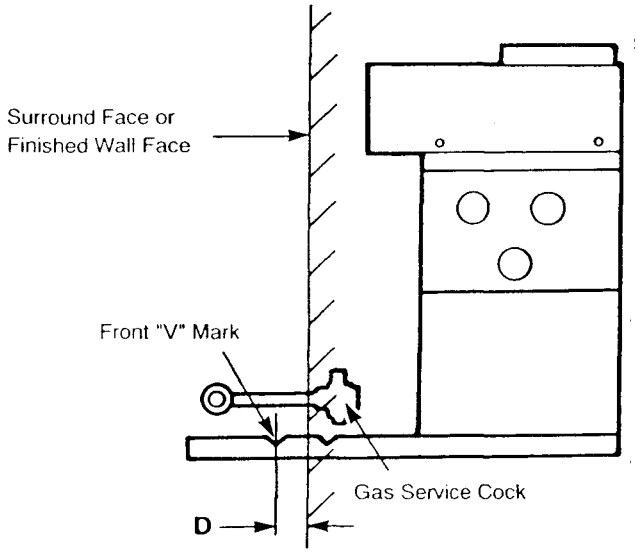

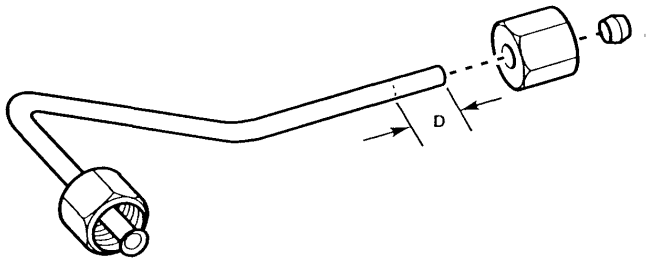

Gas Supply

The gas installation should be in accordance with BS 6891.

The gas supply to the fire unit is provided from the gas service cock on the boiler using the supply pipe supplied with the unit.

The pipe has one flared end (for connection to the fire) and a plain end (for connection to the gas service cock by a nut and olive).

It may be necessary to shorten the supply pipe depending upon the position of the boiler unit relative to the face of the wall or surround. If this is the case, then follow the following procedure, taking care to cut the supply pipe to the correct length.

Measure the distance from the centre of the front ‘V’ mark on the boiler base tray to the face of the wall or surround. Let this distance be known as distance ‘D’.

Mark off distance ‘D’ from the plain end of the supply tube, cut and dispose of the unwanted piece of tube. Care must be taken to ensure that the cut is square and that the pipe is free from burrs and swarf.

(An alternative method of determining the length of the supply pipe is to hold the plain end flush with the face of the wall or surround and mark the pipe at the position of the front V notch on the boiler base tray).

Thread the steel flare nut over the supply pipe, then fix the plain end to the gas service cock on the boiler using the nut and olive. Ensure that the flared end of the pipe faces to the right and is parallel with the hearth or floor, then fully tighten.

Fitting the Fire

HEARTH FIXING

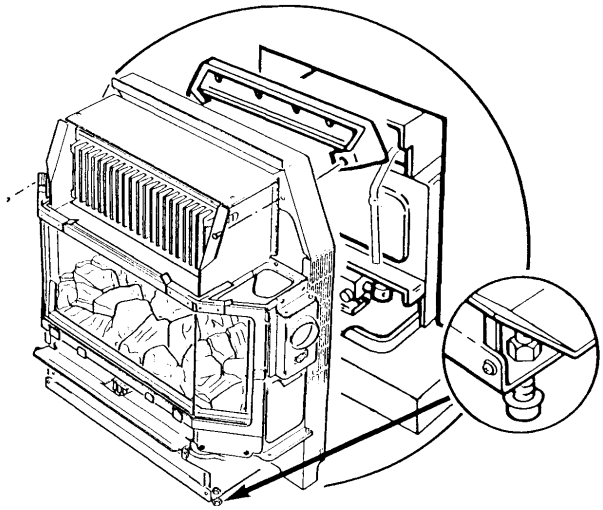

Take the backing plate and fix it to the fire unit with two of the $^{5}/_{8}$ in screws provided. Locate the flue spigot into the down-draught diverter on the boiler unit. Push the fire backwards until the backing plate touches the surround or wall face. Ensure that the down draught diverter bottom passes over the controls heat shield.

Level the fire by adjusting the front feet (check using a spirit level).

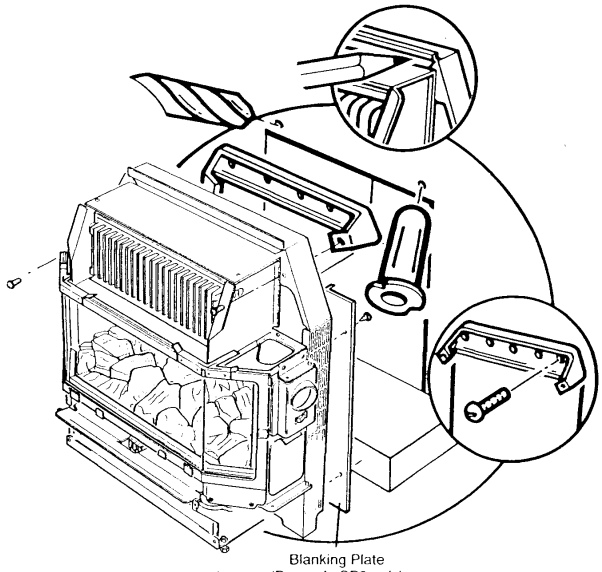

Blanking Plate
(Bermuda SP3 only)

Mark the positions of two suitable fixing holes in the backing plate. **NOTE: Where possible use the top corner fixing hole positions, otherwise space the fixing holes as far apart as possible.**

Remove the fire unit from the hearth and remove the backing plate from the fire chassis by removing the two screws holding it in position. Retain the screws.

Drill the fixing holes in the surround/wall face to accept suitable wall plugs.

Fix the backing plate in position on the wall using suitable screws.

NOTE: (For Bermuda SP3 only). Fit the two blanking plates in position using the $^{3}/_{8}$in screws provided.

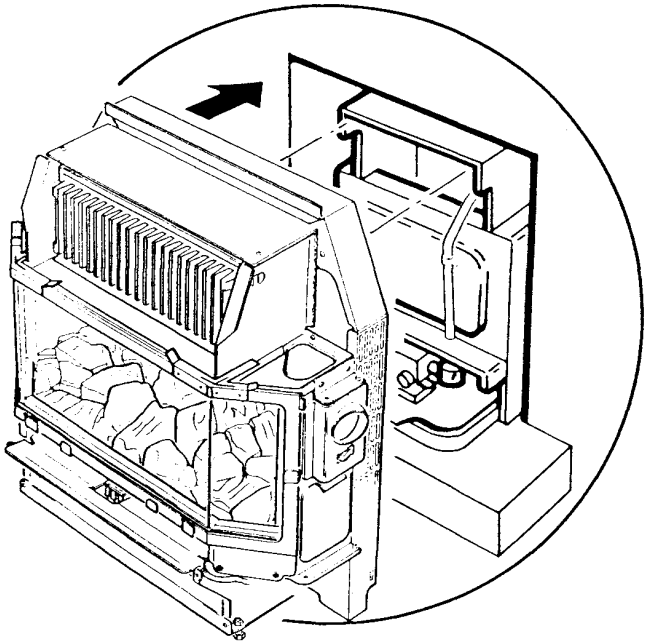

Relocate the flue spigot in the down draught diverter and push the fire backwards as far as possible. Secure the fire to the backing plate using the screws previously removed.

Connect the supply pipe to the fire inlet connection and tighten the flared joint.

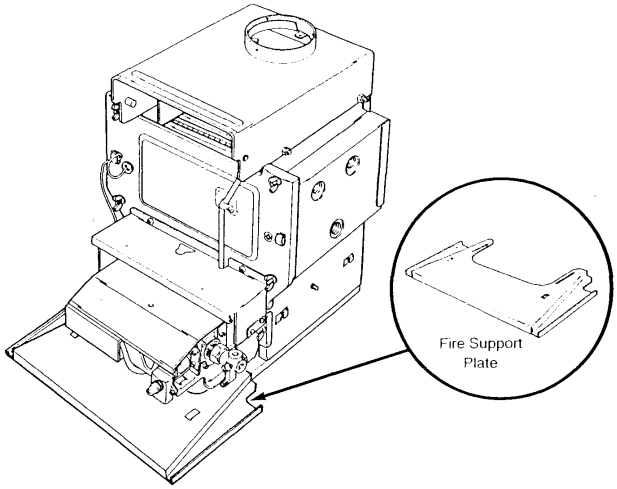

Wall Fixing

Taking the fire support plate from the fire unit packaging, place it above the boiler base protruding from the fireplace opening. (On electronic control boilers it will be necessary to remove the inlet plug from the controls). With the screws provided, loosely attach the plate to the boiler base using the slots at each side.

Push the support plate backwards until it touches the surround/wall face and tighten the screws to lock it in position.

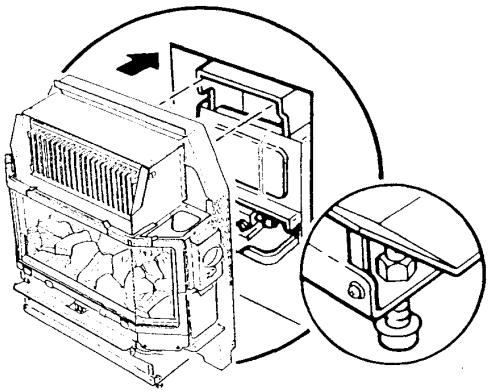

Take the backing plate and fix it to the fire unit with two of the $^{5}/_{8}$in screws provided. Locate the flue spigot into the down-draught diverter on the boiler unit. Push the fire backwards until the backing plate touches the surround or wall face.

Level the fire by adjusting the front feet (check using a spirit level).

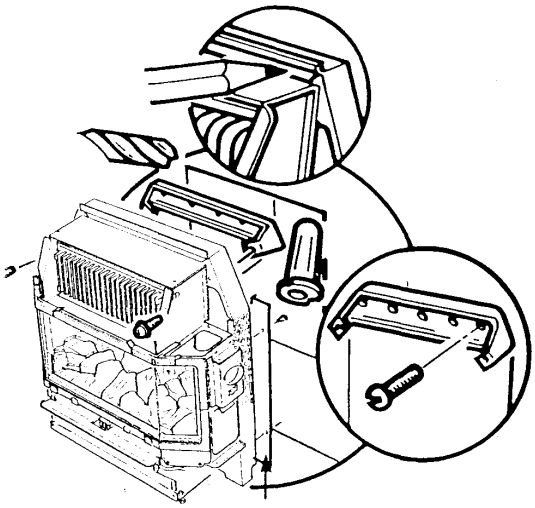

Blanking Plate
(Bermuda SP3 only)

Mark the positions of the available fixing holes in the backing plate. **NOTE: Where possible use the top corner fixing hole positions, otherwise space the fixing holes as far apart as possible.**

Remove the fire unit from the support plate and remove the backing plate from the fire chassis by removing the two screws holding it in position. Retain the screws.

Drill the fixing holes in the surround/wall face to accept suitable wall plugs.

Fix the backing plate in position on the wall using suitable screws.

NOTE: (For Bermuda SP3 only) Fit the two blanking plates in position using the $^{3}/_{8}$in screws provided.

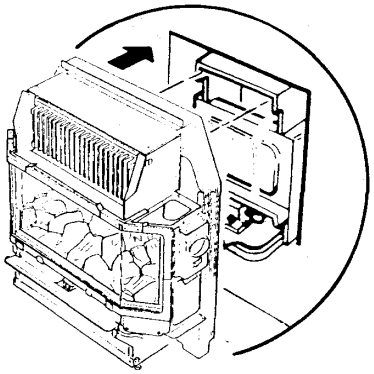

Relocate the flue spigot in the down-draught diverter and push the fire backwards as far as possible. Secure the fire to the backing plate using the screws previously removed

Connect the supply pipe to the fire inlet connection and tighten the flared joint.

COMMISSIONING THE FIRE – Page 14

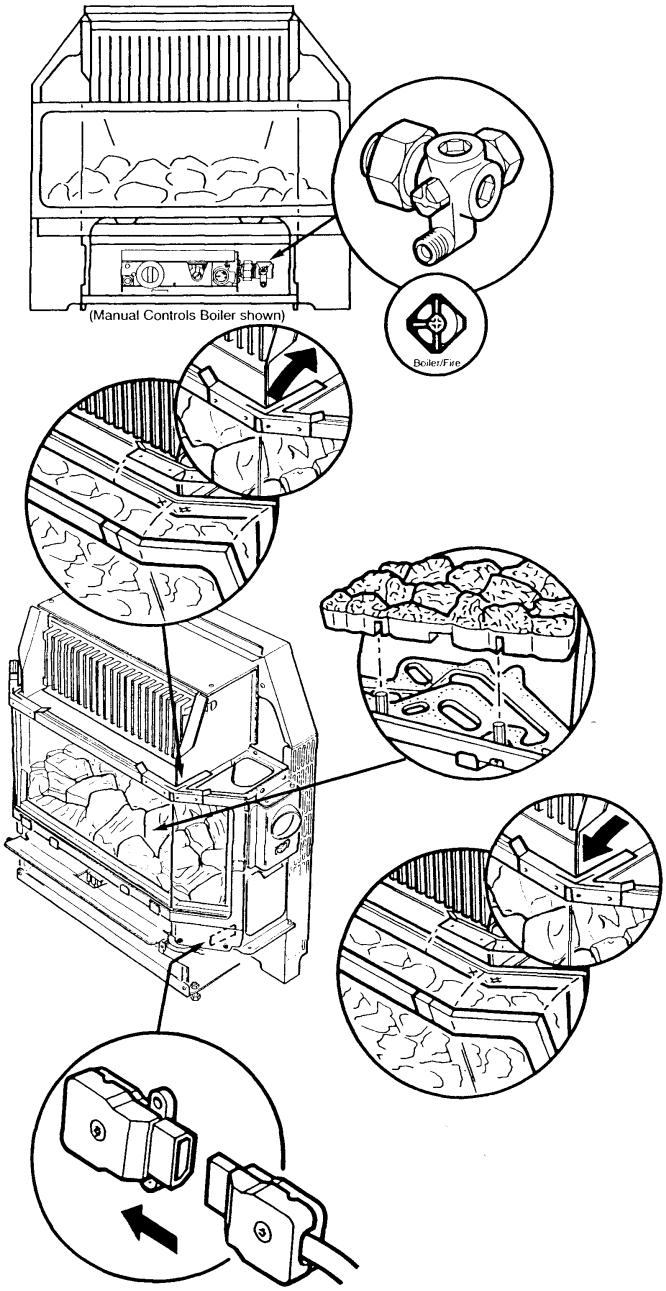

Turn the gas service cock to the boiler and fire position. Purge any air from the fire supply pipe. Check for gas soundness from the gas service cock to the fire inlet connection (BS 6891).

Remove the glass frame by disengaging the retaining clamps and lifting away. Remove the polystyrene packing piece securing the coal bed in position.

Lift the coal bed out and remove from its plastic bag. Carefully place it in position on the burner.

CAUTION: The coal bed is extremely fragile and must be handled accordingly. Gloves must be worn and any inhalation of the dust should be avoided. Keep the coals away from children at all times. Please read the Important Information section on page 4.

Remove any labels fixed to the glass frame assembly and clean both sides of the glass panels using a non abrasive cream cleanser, before replacing the glass frame.

Replace the glass frame and lock in place by engaging the retaining clamps.

Connect the electricity supply to the fire unit by fixing the plug in position.

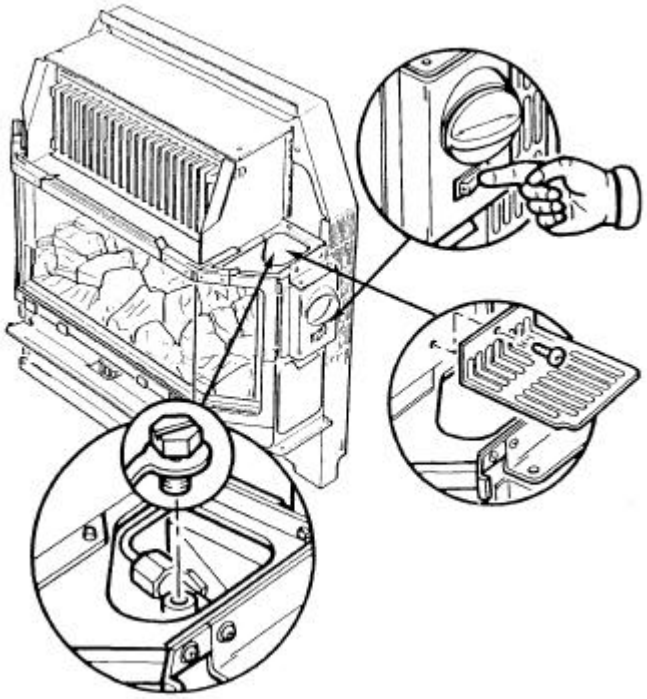

Check the electricity supply to the fire unit by switching on the illumination bulbs. If the bulbs light, switch off and continue with commissioning the fire. If the bulbs do not light, isolate the electricity supply and perform preliminary electrical system checks before proceeding i.e. earth continuity, polarity, resistance to earth etc.

Remove the electrical cover on the right hand side of the chassis by removing the fixing screw.

Release the pressure test point sealing screw and connect a pressure gauge in position.

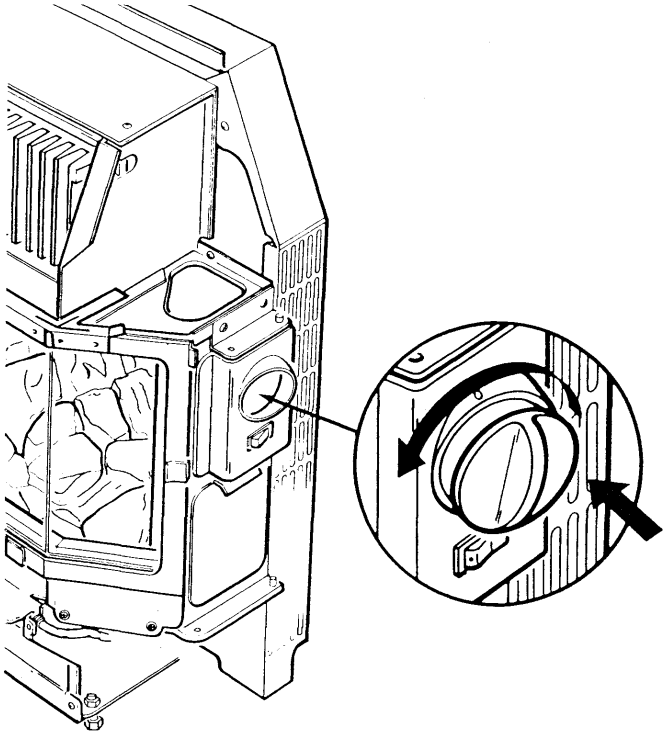

Push in the control knob, turn to the IGNITION position (★🔥) and hold in. Sparking will commence at the ignition electrode and the pilot will ignite.

Continue to hold the control knob in for a further 15 seconds then release. The sparking will stop and the pilot will stay alight. If the pilot does not stay alight, repeat the process after waiting for 2 minutes. (If the pilot still fails to remain alight, refer to the fault finding chart).

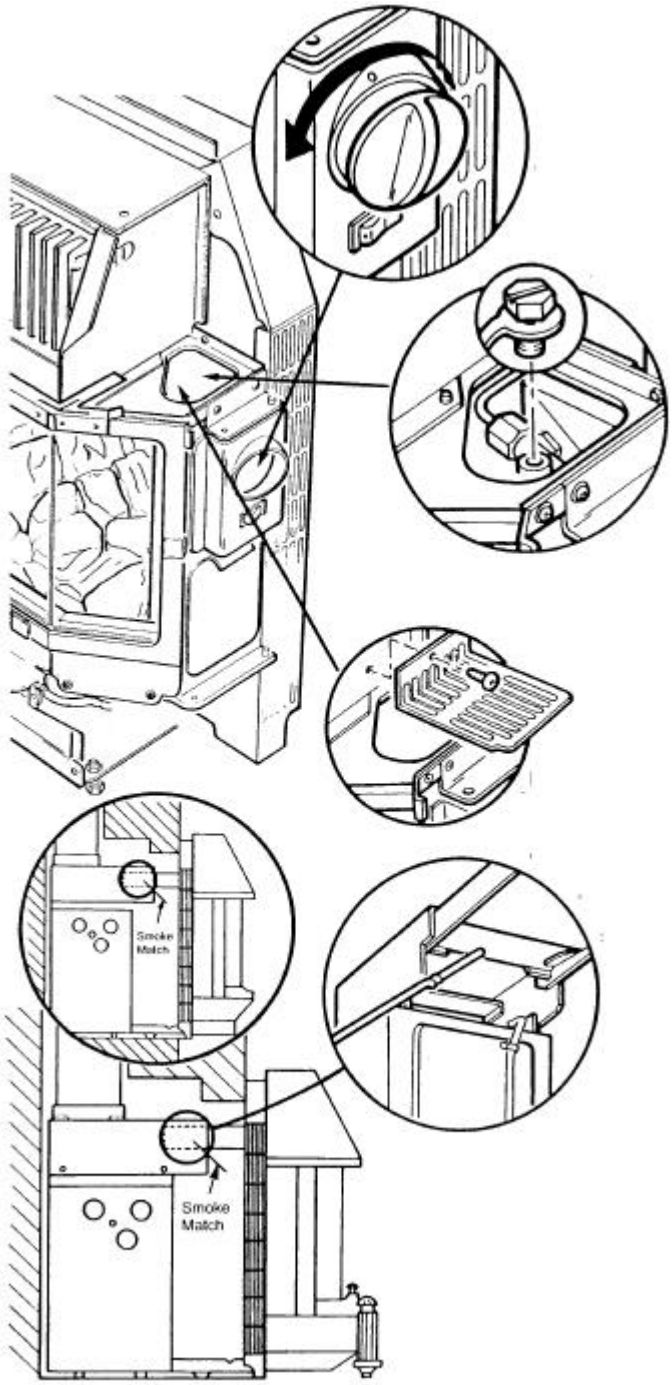

Check the setting pressure at position 4. No adjustment to the setting pressure is possible.

Turn the control knob to the 'OFF' (●) position.

Disconnect the pressure gauge and replace the pressure test point sealing screw, ensuring a gas-tight seal.

Refit the electrical cover.

SPILLAGE DETECTION

A test for clearance of flue products is only possible from the left hand side and must be made as follows: Ensure that all doors and windows in the room are closed. **(If there is an extractor fan or ceiling fan in the room or any adjoining room, the check for spillage must be performed with the fan turned on and any interconnecting doors open.)** Ignite the fire and turn to setting 4. After running for 5 minutes take a lighted smoke match and insert it into the boiler down-draught diverter as shown.

WARNING

CARE MUST BE TAKEN TO AVOID TOUCHING HOT PANELS AT THIS POINT.

If the majority of the smoke is not drawn into the chimney, then spillage of combustion products is indicated and further investigations must be carried out.

Repeat the procedure with both the boiler and the fire alight (the boiler having been alight for 5 minutes).

FITTING THE OUTER CASE – Page 17

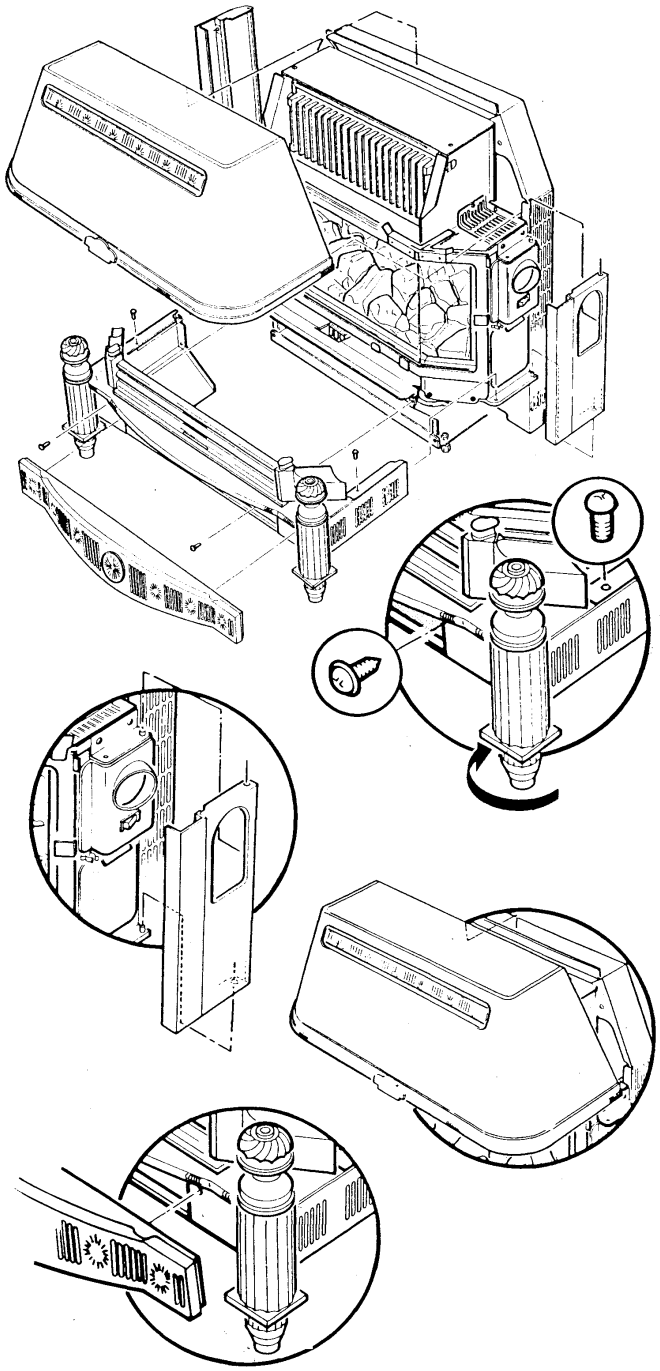

Bermuda VP3

Turn off the fire and fit the outer case components as follows:

Remove the fender front from the hearth assembly by pulling forward.

Engage the hearth assembly on the side ledges as shown and push home as far as possible. Adjust the feet to touch the fireplace hearth. Fix the hearth assembly in position using the two N° 8 x $^5/_8$in screws in the front and the two M4 x 8mm thread former screws in the sides.

Hang the left and right hand side doors on the fittings as shown and close the doors, ensuring that they lock in position.

Fix the canopy by lowering it into position over the top edge and then by gently easing the sides inwards, push home to lock in place.

Locate the fender front in position at the front of the hearth assembly and push home.

Instruct the user in the operation of the fire controls and hand over the user's instructions and installation instructions, **giving advice on the necessity of regular servicing.**

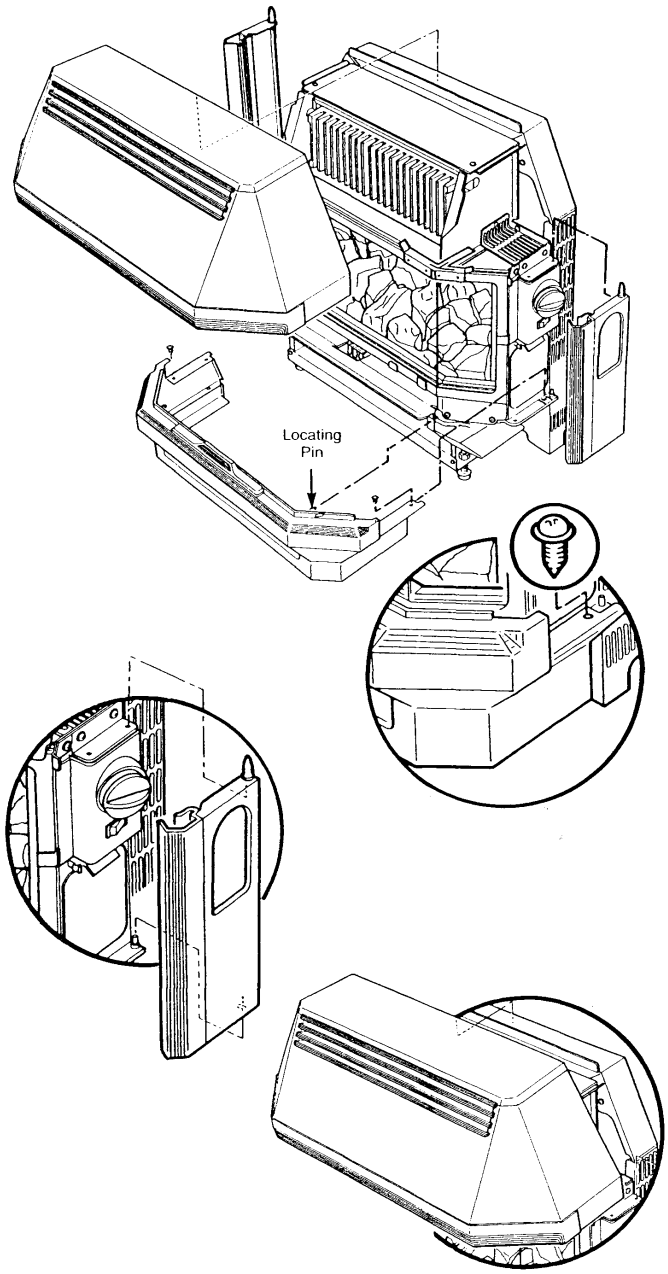

Bermuda SP3

Turn off the fire and fit the outer case components as follows:

Engage the hearth by guiding the locating pins through the holes in the innercase and sliding forward on the side ledges as far as possible. Fix the hearth in position using the two $^{3}/_{8}$ in screws in the sides.

Hang the left and right hand side doors on the fittings as shown, leaving them open.

Fix the canopy by guiding the bottom edge onto the door pins and then by tilting the back edge over the locating lip on the innercase. Close the doors ensuring they lock in place.

Instruct the user in the operation of the fire controls and hand over the user's instructions and installation instructions, **giving advice on the necessity of regular servicing.**

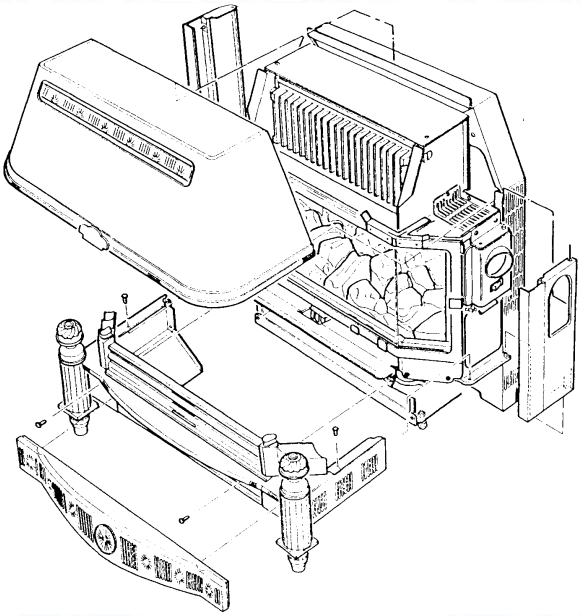

Bermuda VP3

For reasons of safety and economy, it is important to service both the fire and boiler units annually. Before servicing please read the Important Information section on page 4.

NOTE: Before attempting to service the appliance, ensure that the fire is COLD.

Important: It is possible that some soot may be deposited on the coals after use. This is acceptable providing it is not allowed to accumulate.

CAUTION: The coal bed is extremely fragile and must be handled accordingly. Gloves should be worn and any inhalation of the dust should be avoided. Keep the coals away from children at all times.

ISOLATE THE GAS AND ELECTRICITY SUPPLY TO THE BOILER AND FIRE UNITS INCLUDING THE PERMANENT LIVE.

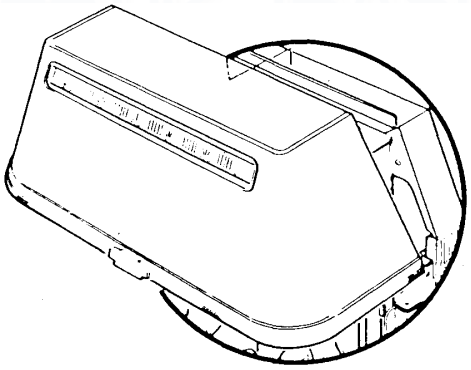

Remove the canopy by gently easing the sides inwards and pulling the bottom edge forward, then lift the canopy upwards and away from the locating lip.

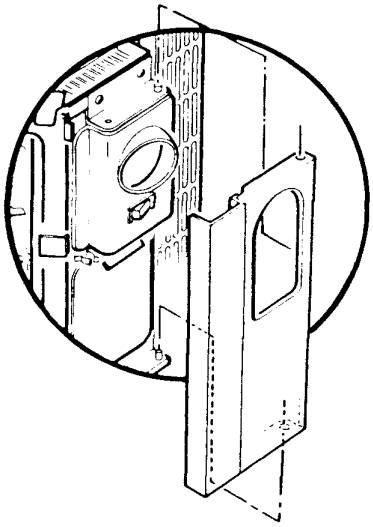

Remove the left and right hand side doors firstly by opening them and then lifting away from their mountings.

Remove the fender front by pulling forward.

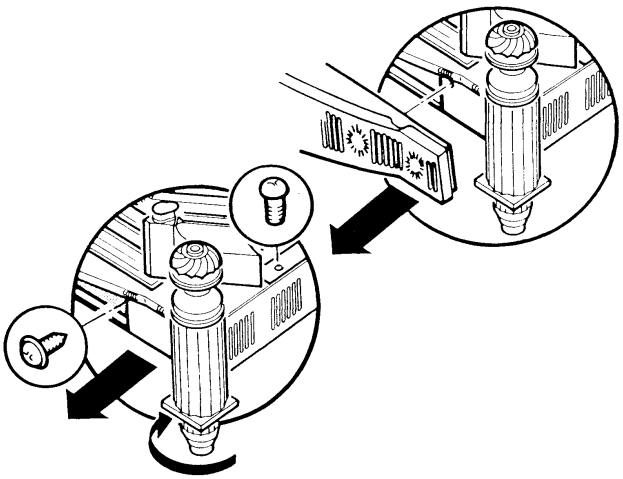

Remove the hearth assembly by removing the fixing screws and sliding it forward and away from the chassis.

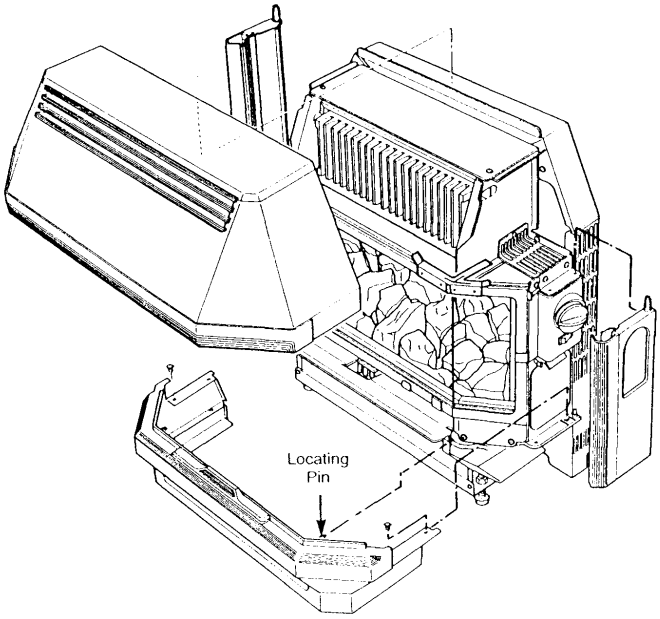

Bermuda SP3

For reasons of safety and economy, it is important to service both the fire and boiler units annually. Before servicing please read the Important Information section on page 4.

NOTE: Before attempting to service the appliance, ensure that the fire is COLD.

Important: It is possible that some soot may be deposited on the coals after use. This is acceptable providing it is not allowed to accumulate.

CAUTION: The coal bed is extremely fragile and must be handled accordingly. Gloves should be worn and any inhalation of the dust should be avoided. Keep the coals away from children at all times.

ISOLATE THE GAS AND ELECTRICITY SUPPLY TO THE BOILER AND FIRE UNITS INCLUDING THE PERMANENT LIVE.

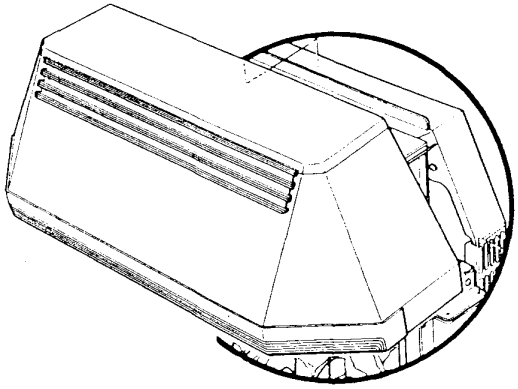

Remove the canopy firstly by opening the left and right hand side doors, then lift the canopy by the bottom edge upwards and away from the locating lip.

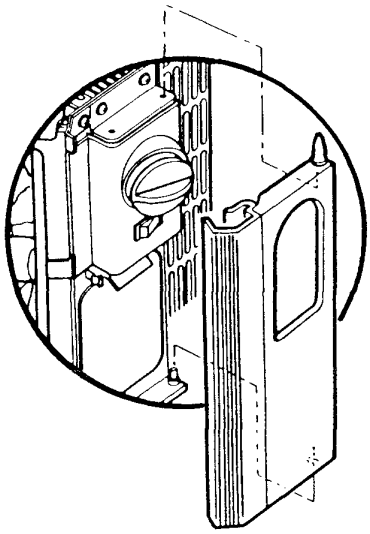

Remove the left and right hand side doors by lifting them from their mountings.

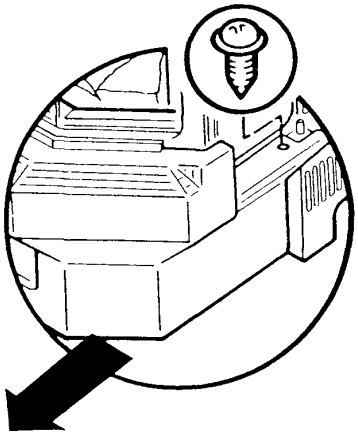

Remove the hearth by removing the fixing screws and sliding the hearth assembly forward and away from the chassis.

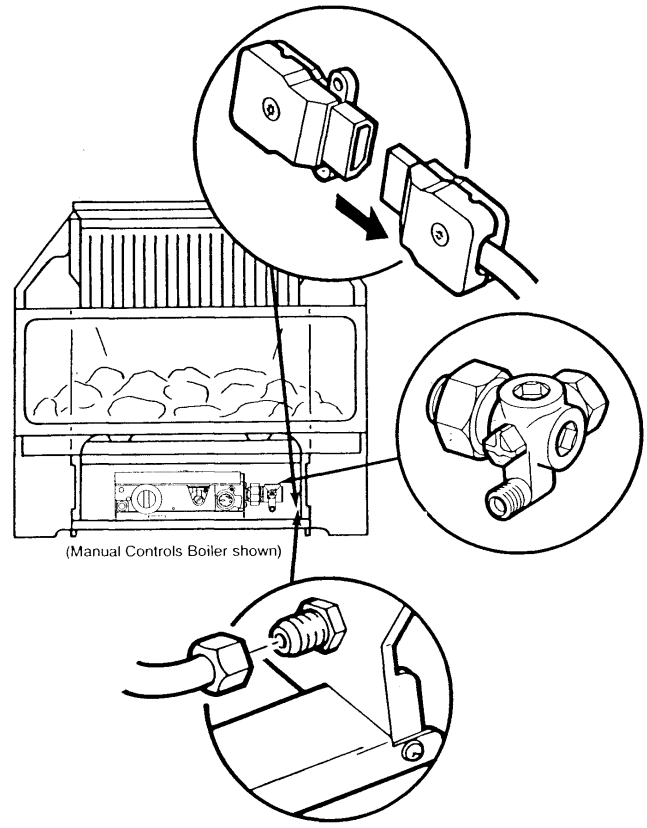

In order to service the boiler unit, the fire must be disconnected and removed at this point. Once disconnected the fire unit may be serviced separately from the boiler.

Disconnect the 3-pin plug from the socket beneath the fire.

Turn off the gas service cock by turning fully clockwise.

Disconnect the fire supply pipe from the fire inlet.

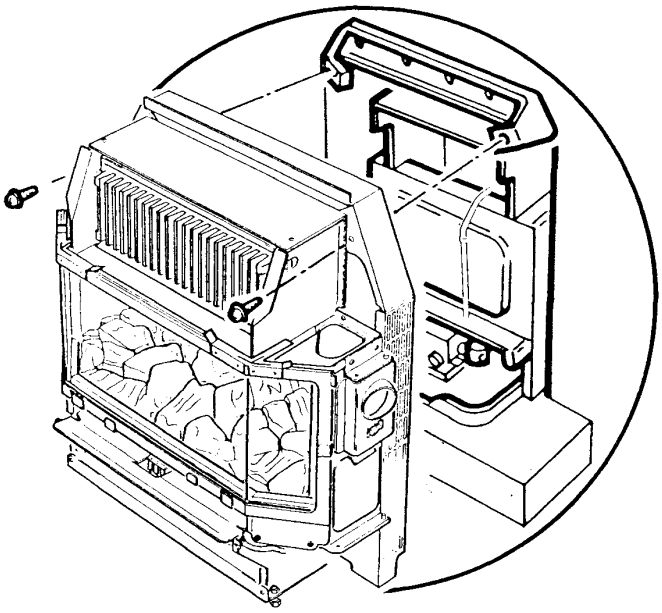

Remove and retain the two screws fixing the chassis to the backing plate. Pull the fire forwards until the flue spigot is clear of the boiler canopy and lift away.

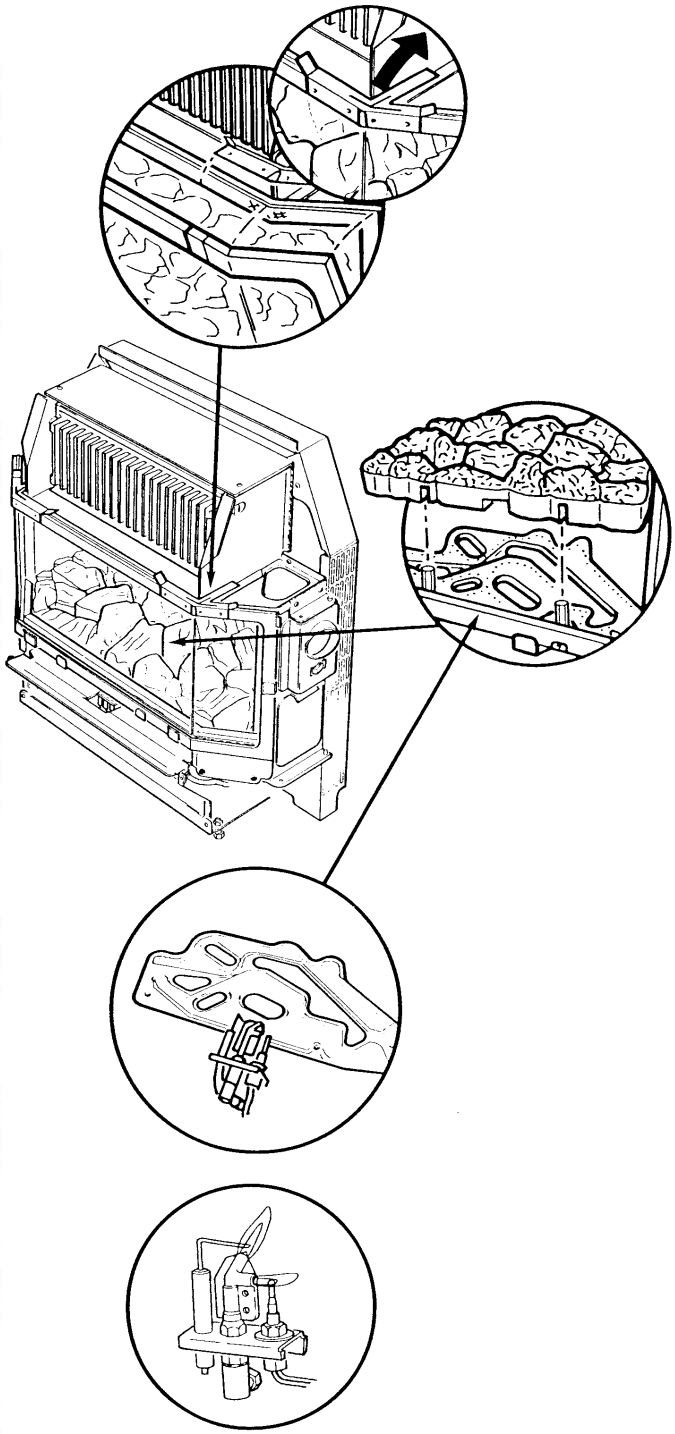

Ensuring that the glass frame is cold, disengage the retaining clamps and lift the frame away.

Remove the coal bed by carefully lifting away from the locating pins and place to one side.

Cleaning the Pilot / A.S.D. Assembly

WARNING: The A.S.D. pilot assembly must not be adjusted in any way.

The A.S.D. must not be altered so that it will not operate or be bypassed in any way.

Ensure that the pilot burner aeration hole is free from lint, debris etc.

If necessary clean the electrode and target, and check that the spark gap is 2.5 - 4.0mm.

The thermocouple cannot be changed as an individual component. The complete assembly must be replaced in the event of one or other component failure(s).

Only use a Genuine Baxi Spare Part.

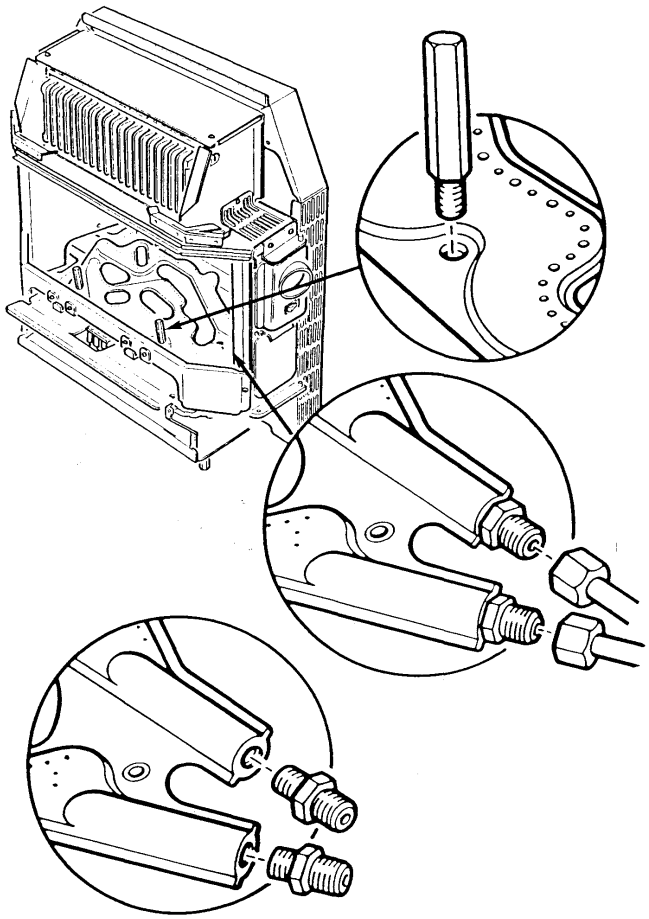

Cleaning the Burner / Injectors

Remove the burner as follows:

Remove the locating pins (these also secure the burner to its support brackets).

Disconnect the compression nuts from the injectors. Remove the burner from the fire.

Using a soft brush remove any dirt or debris from the top of the burner and ensure that the ports and aeration openings are free from obstruction.

Release and remove the injectors from the burner. Examine and clean carefully then replace.

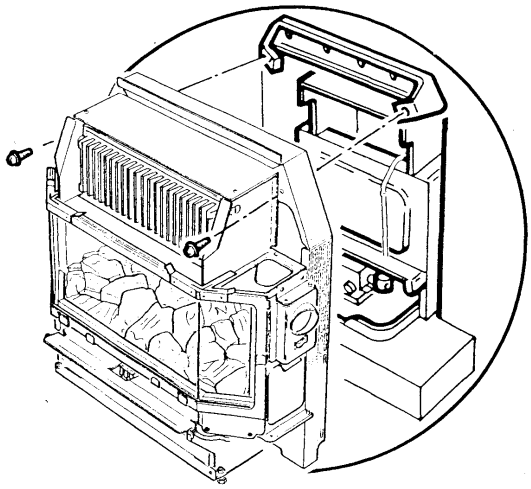

BEFORE RE-ASSEMBLING ALL COMPONENTS

Examine the glass frame, if the glass is in any way damaged, then it must be replaced.

NOTE: This is a heat resistant glass and must not be replaced by “ordinary” glass.

The glass may be cleaned with a non-abrasive cream cleansing agent if required.

Examine the glass frame sealing rope on the fire and replace it if in any way damaged.

Examine the coal bed and replace it if any major damage has occurred.

Re-assemble all components in reverse order, ensuring that the flue spigot is engaged into the boiler down-draught diverter. Make good all gas and electrical connections and check for gas soundness.

Re-commission the fire and boiler before use, then re-assemble the outercase components in the reverse order of dismantling.

CHANGING COMPONENTS – Page 24

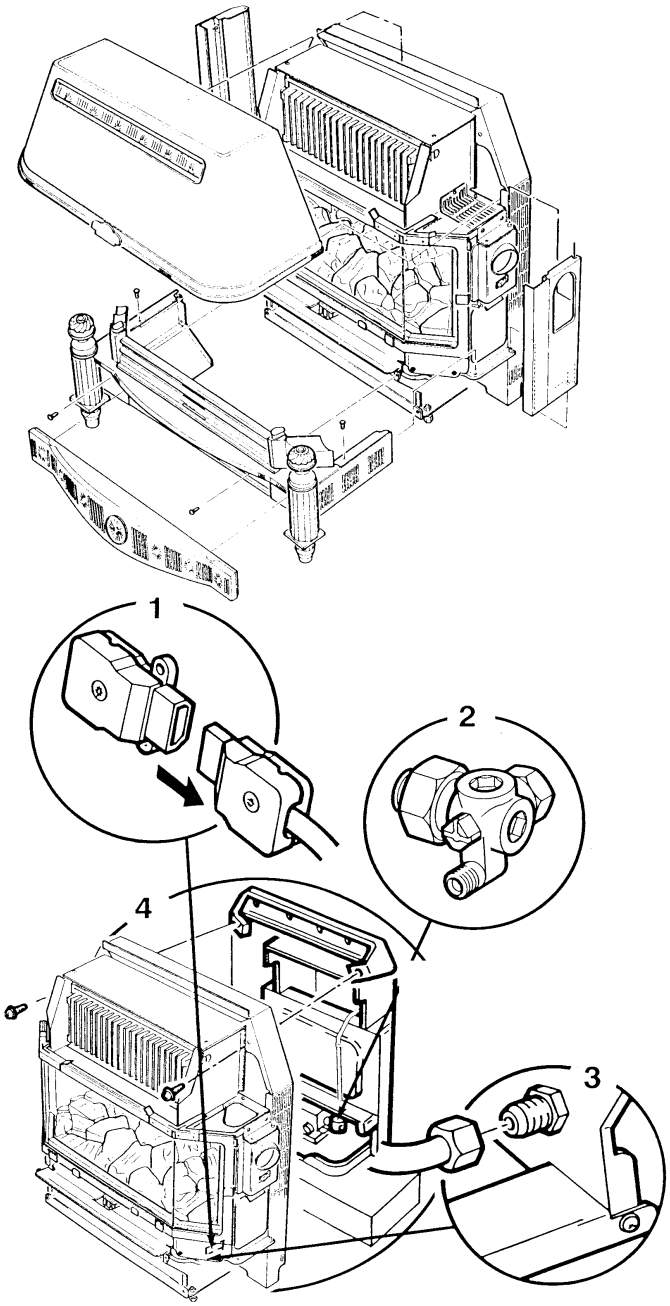

Bermuda VP3

When changing components ensure that the gas and electricity supplies (including the permanent live) are isolated before the work is started. Before changing any components please read the Important Information section on page 4.

After changing components, check for gas leaks and recommission.

To change the GLASS FRAME, FRAME SEALING ROPE, COAL BED, ELECTRODE, BURNER, INJECTORS and LIGHT SWITCH, remove the canopy and side doors as shown.

To change a LIGHT BULB refer to the User's Instructions for this appliance.

To change the ELECTRODE LEAD, SPARK GENERATOR and RESISTOR, remove the canopy, side doors, fender front and hearth assembly as shown.

To change the PILOT/A.S.D. ASSEMBLY, ELECTRO-MAGNETIC UNIT, CONTROL TAP and MICRO-SWITCH, remove the canopy, side door, fender front and hearth assembly. The fire must then be disconnected from the gas supply and removed from the fireplace to give access to the rear of the unit as follows:

1

Disconnect the 3-pin plug from the socket beneath the fire.

2

Turn off the gas service cock by turning fully clockwise.

3

Disconnect the fire supply from the fire inlet.

4

Remove and retain the two screws fixing the chassis to the backing plate. Pull the fire forwards until the flue spigot is clear of the boilercanopy and lift away.

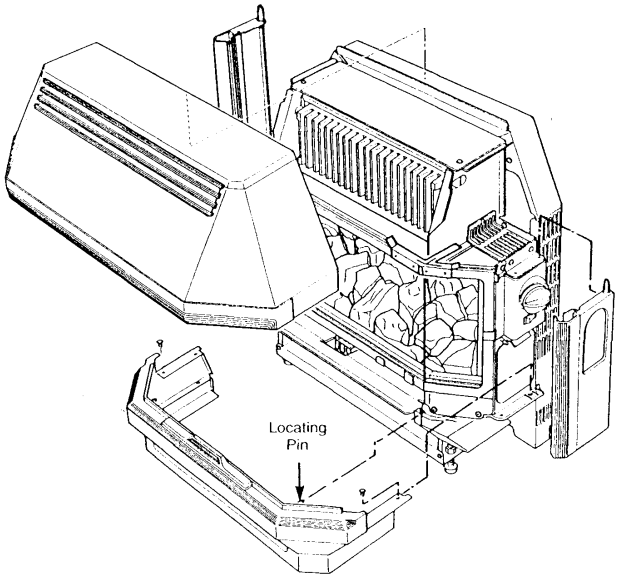

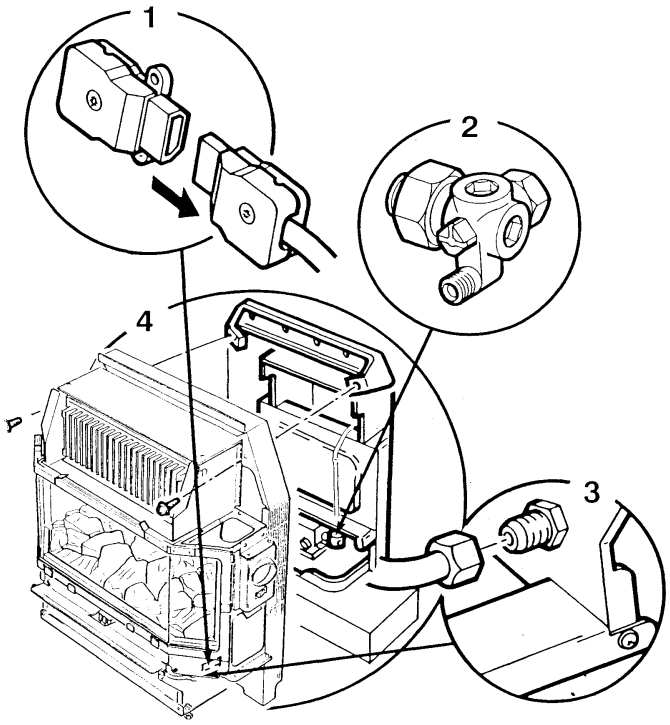

Bermuda SP3

When changing components ensure that the gas and electricity supplies (including the permanent live) are isolated before the work is started. Before changing any components please read the Important Information section on page 4.

After changing components, check for gas leaks and recommission.

To change the GLASS FRAME, FRAME SEALING ROPE, COAL BED, ELECTRODE, BURNER, INJECTORS and LIGHT SWITCH, remove the canopy and side doors as shown.

To change a LIGHT BULB refer to the User's Instructions for this appliance.

To change the ELECTRODE LEAD, SPARK GENERATOR and RESISTOR, remove the canopy, side doors and hearth as shown.

To change the PILOT/A.S.D. ASSEMBLY, ELECTRO-MAGNETIC UNIT, CONTROL TAP and MICRO-SWITCH, remove the canopy, side door and hearth. The fire must then be disconnected from the gas supply and removed from the fireplace to give access to the rear of the unit as follows:

1

Disconnect the 3-pin plug from the socket beneath the fire.

2

Turn off the gas service cock by turning fully clockwise.

3

Disconnect the fire supply from the fire inlet.

4

Remove and retain the two screws fixing the chassis to the backing plate. Pull the fire forwards until the flue spigot is clear of the boiler canopy and lift away.

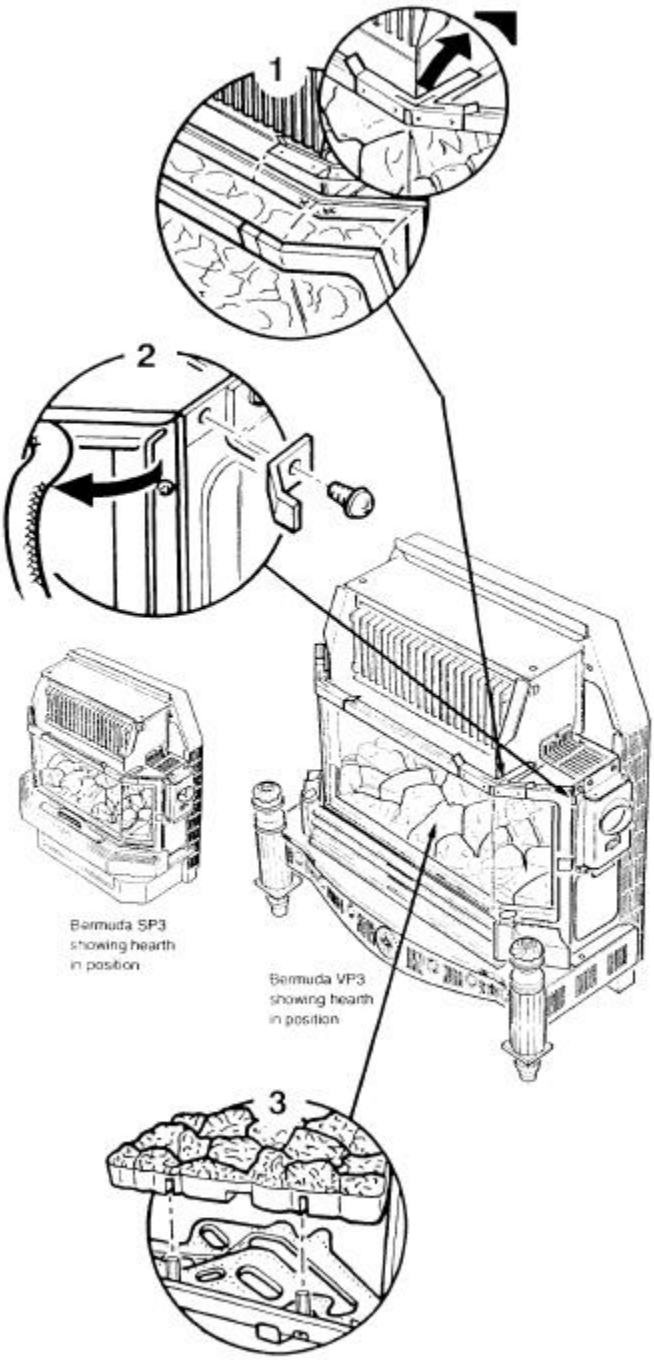

Glass Frame

1

Ensure that the glass panel is cold. Disengage the retaining clamps.

Lift the frame away.

Fix the new glass frame in position and engage the retaining clamps. Re-assemble the components in the reverse order to dismantling.

Frame Sealing Rope

1

Ensure that the glass panel is cold. Disengage the retaining clamps.

Lift the frame away.

2

Pull the old rope seal out of the locating channel and release the glass locating brackets.

Fit the new seal, starting at the centre, tuck well into the locating channel. Ensure that there is an equal amount of seal free at either end of the channel. Secure the glass locating brackets.

Fix the glass frame in position and engage the retaining clamps. Re-assemble the components in the reverse order to dismantling.

Check that the seal between the rope and the glass frame is good.

Coal Bed

1

Ensure that the glass panel is cold. Disengage the retaining clamps.

Lift the frame away.

3

Lift the coal bed away from the locating pins.

Carefully fit the new coal bed in position on the locating pins. Fix the glass frame in position and engage the retaining clamps. Re-assemble the components in the reverse order to dismantling.

CAUTION: The coal bed is extremely fragile and must be handled accordingly. Gloves should be worn and any inhalation of the dust should be avoided. Keep the coals away from children at all times. Please read the Important Information section on page 4.

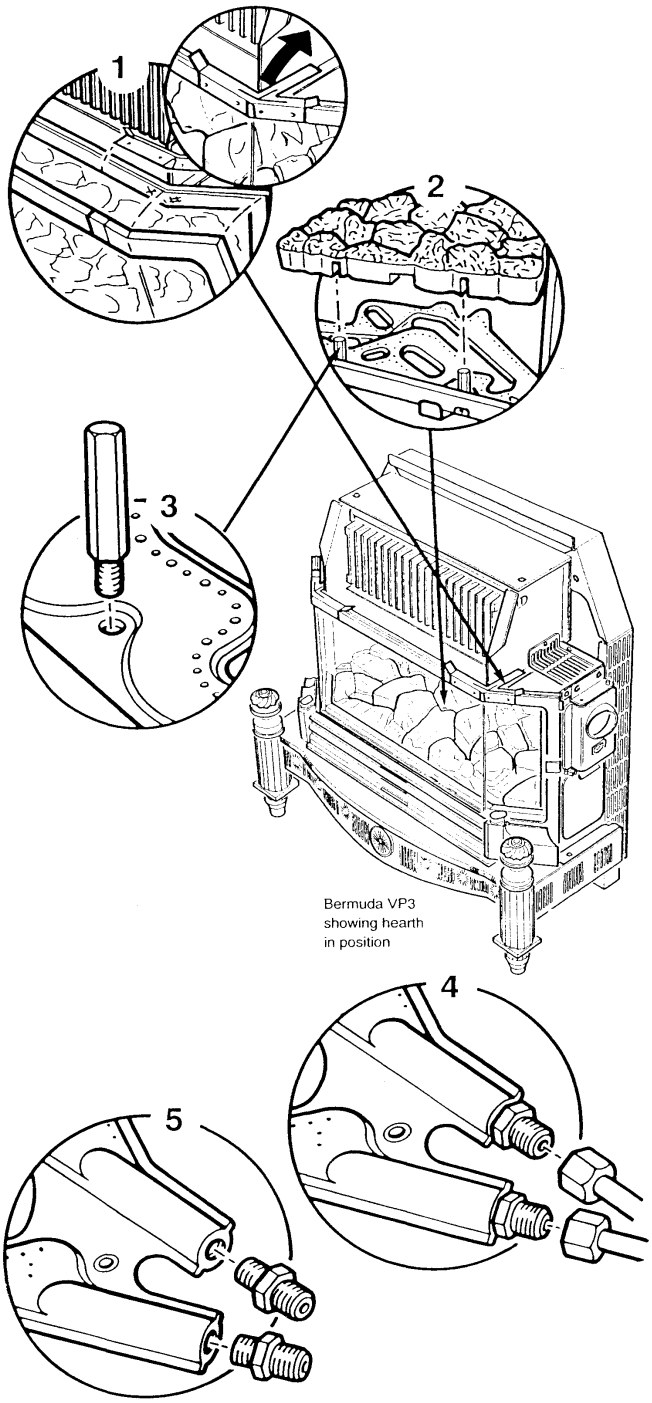

Bermuda VP3
showing hearth
in position

Burner and Injectors

1

Ensure that the glass panel is cold.
Disengage the retaining clamps and lift the frame away.

2

Lift the coal bed away from the locating pins and place to one side.

3

Remove the locating pins
securing the burner to its support brackets.

4

Disconnect the compression nuts from the injectors and carefully remove the burner to avoid damaging the pilot assembly.

5

Remove the injectors from the old burner and fit them into the new burner or if required fit new injectors (flat end in the burner) taking care not to over tighten them in their mountings.

Re-assemble the components in the reverse order to dismantling.

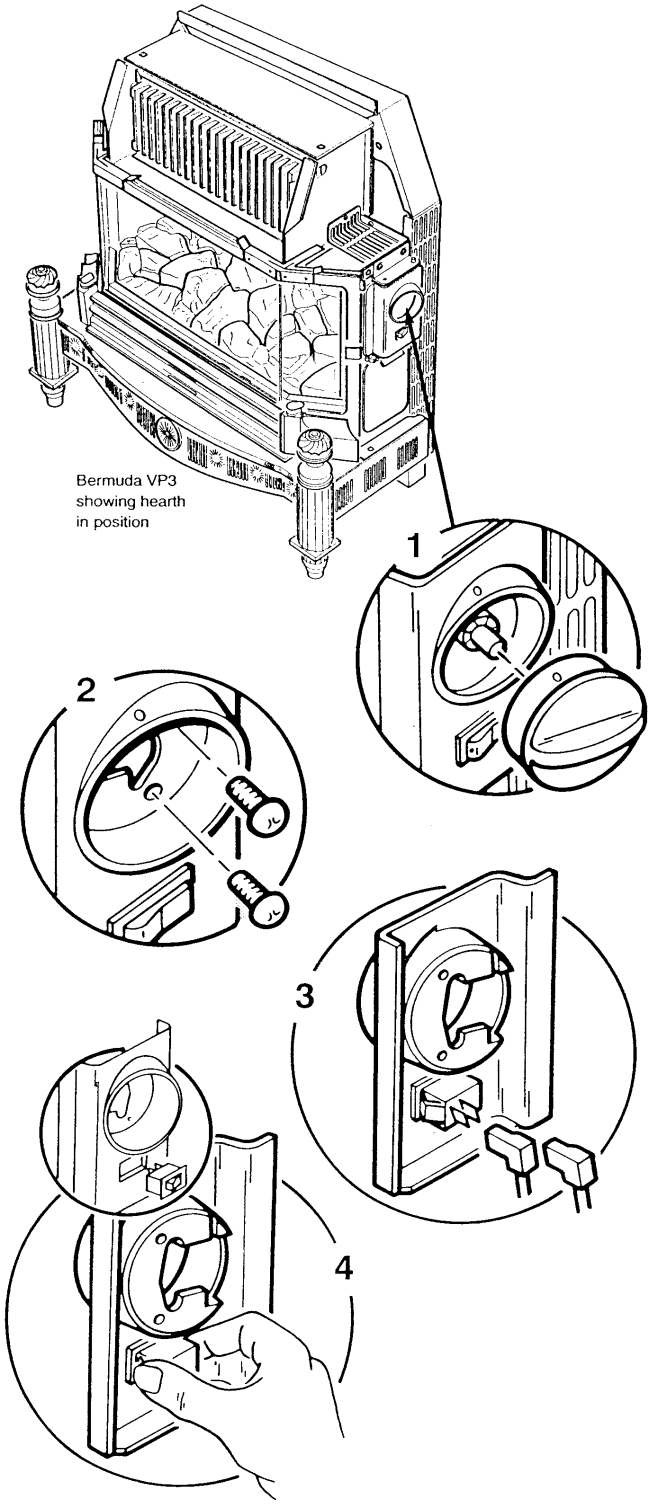

Ensure that the electricity supply to the fire unit is isolated.

1

Remove the control knob by pulling from the spindle.

2

Remove the two screws holding the bezel in place.

3

Note the orientation of the two electrical connections and disconnect from the switch. Remove the bezel.

4

Press together the retaining arms on the rear of the switch and remove from the bezel.

Fit the new switch in place, ensure that the orientation of the switch is correct. (i.e. with the ‘O’ symbol towards the front of the fire.) and make good the electrical connections.

Re-assemble the components in the reverse order to dismantling.

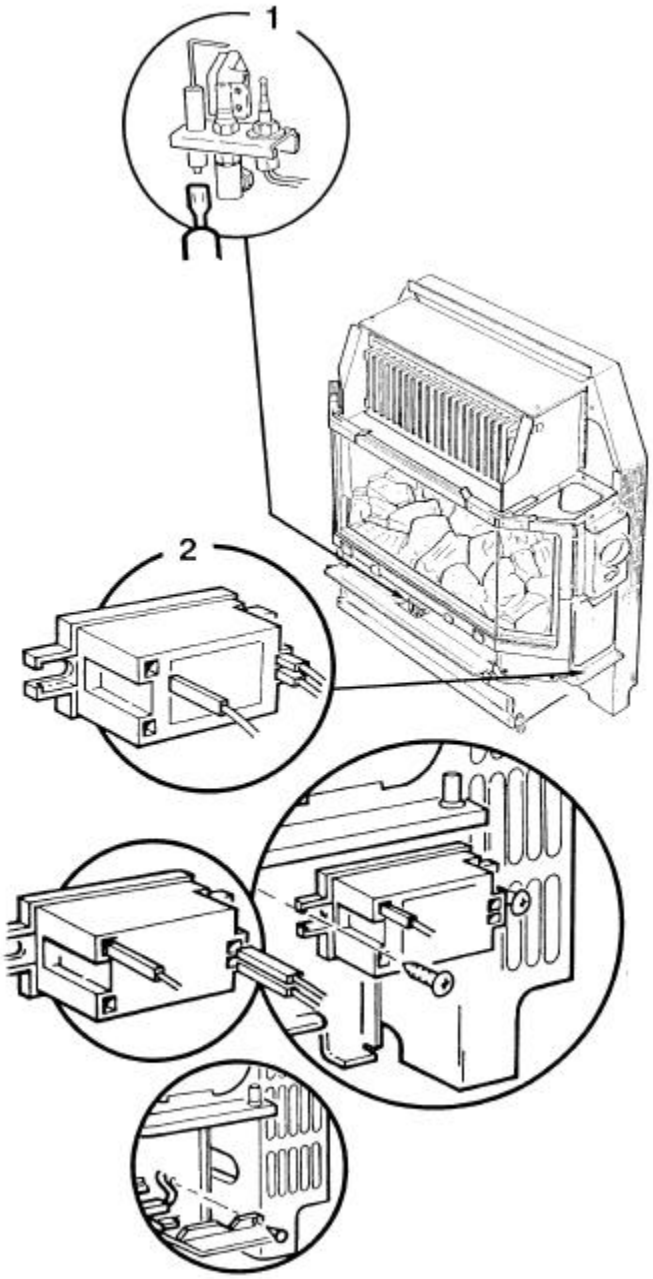

Electrode Lead

1

Remove the insulating sleeve from the body of the electrode. Disconnect the electrode lead from the electrode.

2

Disconnect the electrode lead from the spark generator.

Undo the screw holding the orange panel to the chassis. Lift the panel upwards and withdraw the sleeve and lead.

Thread the new electrode lead through the insulating sleeves. Fit the new electrode lead to the spark generator and electrode.

Re-assemble the components in the reverse order to dismantling.

Spark Generator

Remove the front screw holding the spark generator in place, and release the rear screw, enabling the generator to be removed. Disconnect the electrical connections and electrode lead.

Fit the new spark generator and re-assemble all components in the reverse order to dismantling.

Resistor

Remove the two screws securing the light shield bracket. Unclip the resistor from the side frame. Disconnect the two resistor wires from the terminal strip. Replace resistor and refit in reverse order.

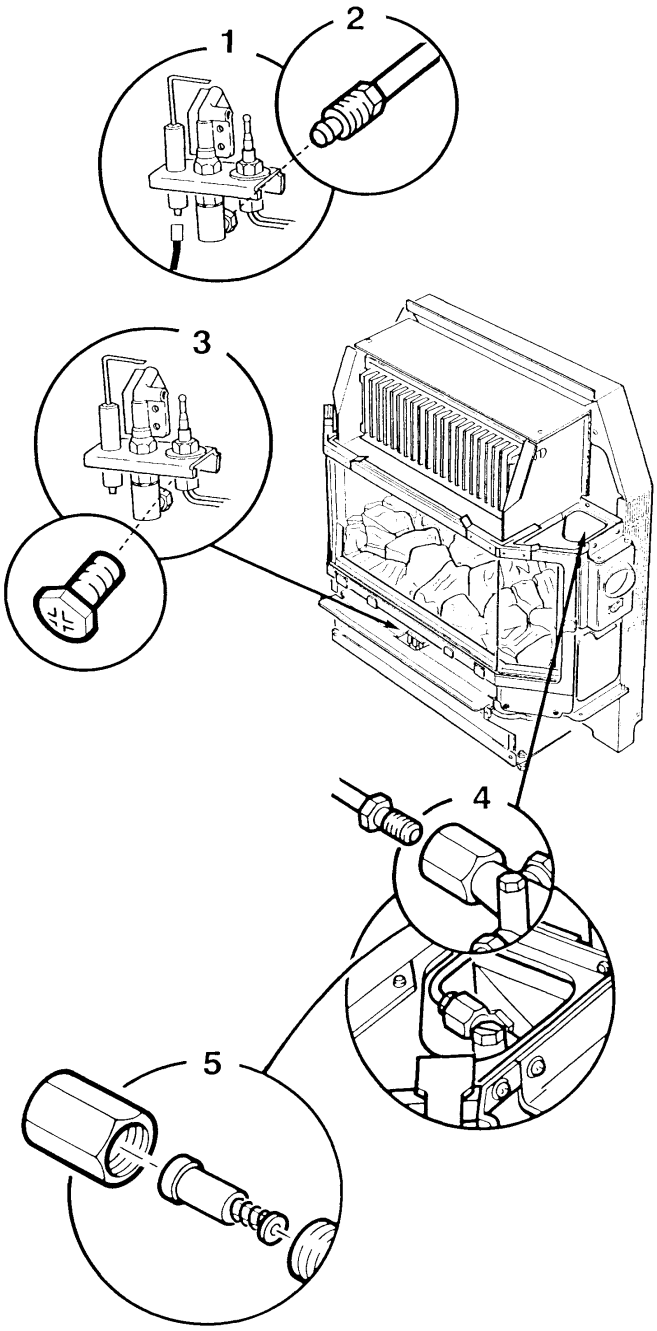

Pilot / ASD Assembly

WARNING: The Pilot / A.S.D. assembly must not be adjusted in any way.

The A.S.D. must not be altered so that it will not operate or be bypassed in any way.

The thermocouple cannot be changed as an individual component. The complete assembly must be replaced in the event of one or other component failure(s).

Only use a Genuine Baxi Spare Part.

1

Remove the lead from the electrode.

2

Undo the pilot feed pipe from the assembly.

4

Undo the thermocouple from the gas tap.

3

Remove the screws holding the pilot assembly bracket to the fire chassis. Unclip the thermocouple from the fire chassis. Withdraw the pilot assembly and bracket.

Remove the screw holding the assembly to the bracket.

Re-assemble all components in the reverse order to dismantling.

Electro-Magnetic Unit

4

Release the thermocouple from the control tap by unscrewing the retaining nut.

5

Release the Electro-Magnetic Unit retaining nut and remove the unit from the control tap. Fit the new Electro-Magnetic Unit and replace the retaining nut.

Fix the thermocouple in position taking care not to overtighten the retaining nut. Re-assemble all components in reverse order to dismantling.

Check for gas leaks.

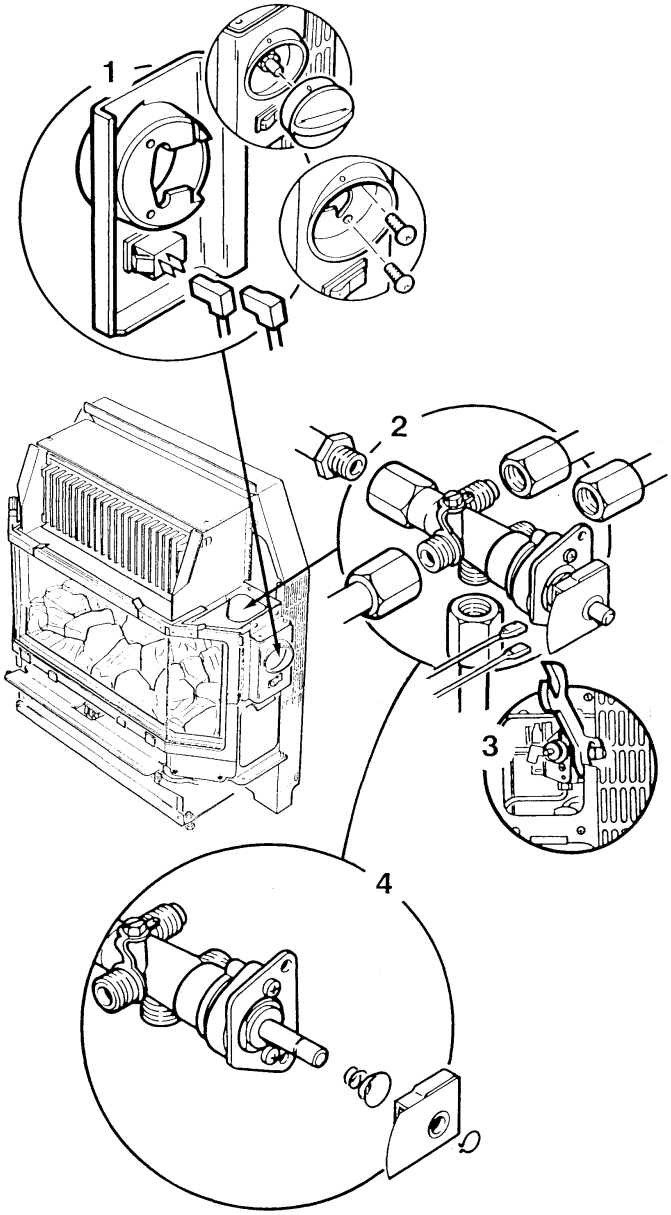

Control Tap and Micro-Switch

1

Remove the control knob by pulling from the spindle.

Remove the two screws holding the bezel in place.

Disconnect the two electrical connections from the light switch, taking note of their orientation. Remove the bezel.

2

Release the thermocouple from the control tap by unscrewing the retaining nut.

Disconnect the two electrical connections from the micro switch.

Release the nut-and-olive connections on the control tap body and disconnect the gas pipes from the control tap.

Disconnect the gas inlet at the control tap by releasing the compression fitting.

3

Release the locknut fixing the control tap to the chassis. Access to the locknut may be gained through the bezel location.

Withdraw the control tap from the fire.

4

At this point change the micro-switch if required by removing the circlip holding it in position on the control tap.

Fit the new micro-switch or the new control tap in reverse order.

Make good all gas and electrical connections. Temporarily reconnect electricity supply. Light the fire, turn off the electricity supply and check all joints for gas soundness. Turn the fire off. Re-assemble all components in reverse order to dismantling.

spares & parts online
IBASIS.CO.UK

FAULT FINDING – Page 32-33

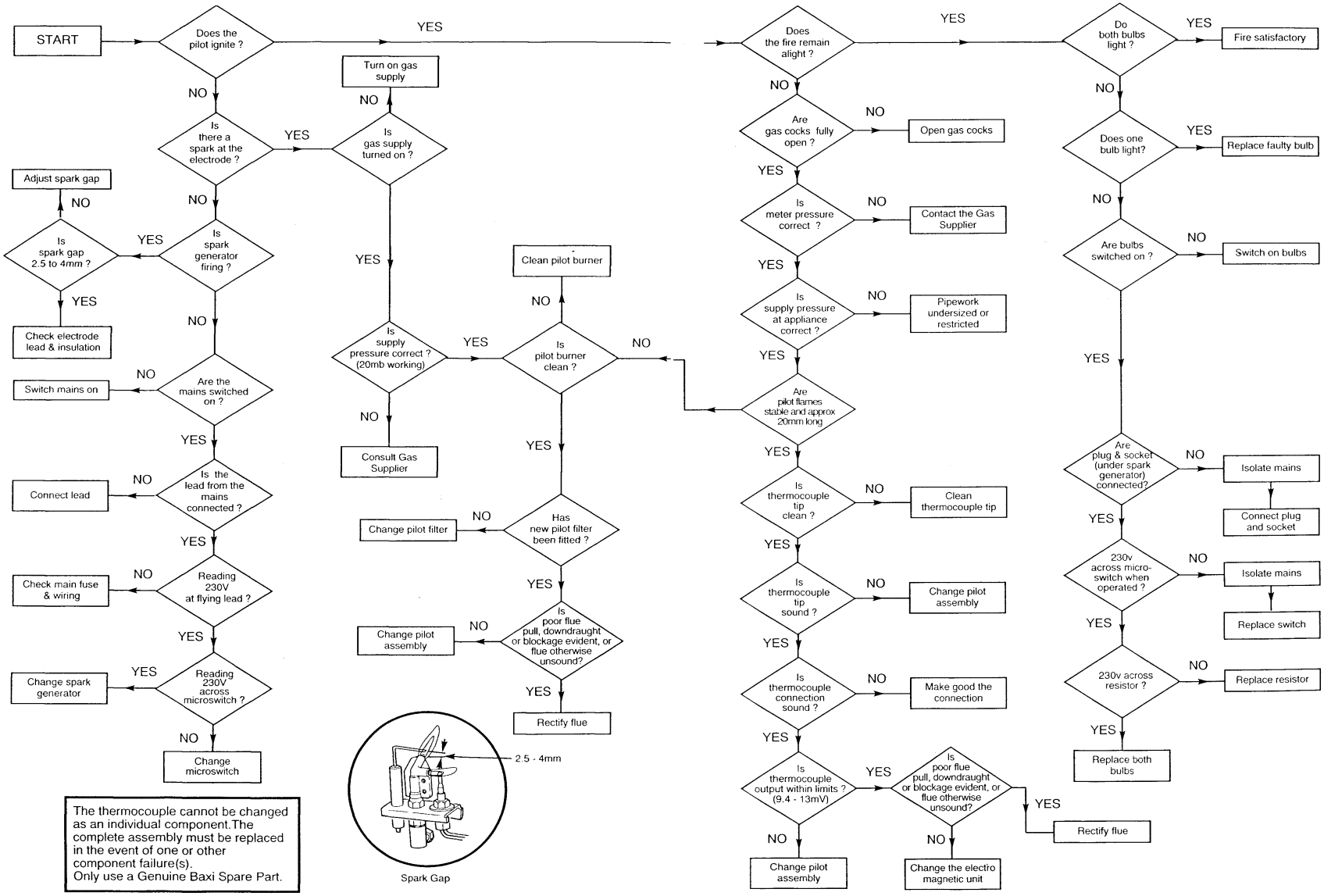

SHORT PARTS LIST – Page 34

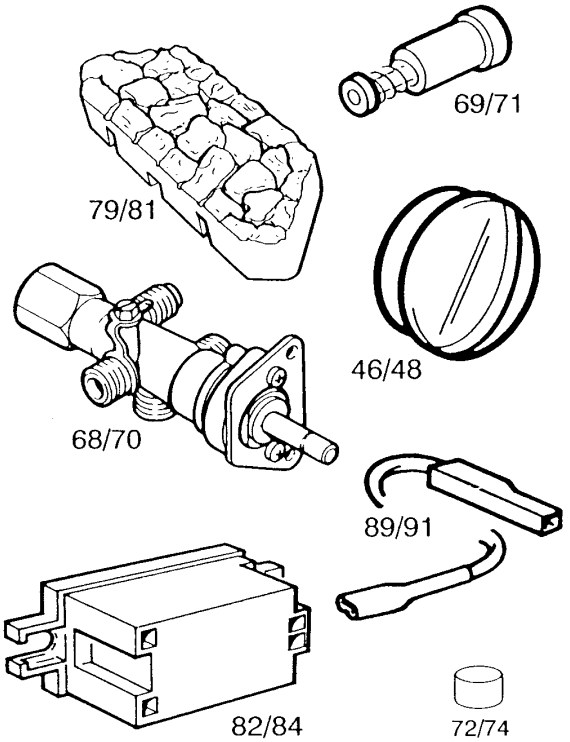

Key N°s SP3	VP3	G.C. N°	Description	Manufacturers Part N°
15	17	156 036	Glass and Frame Assy	225391
-	48	156 233	Knob Control SP3	233466
46	-	156 431	Knob Control VP3	236394
50	52	156 063	Seal Frame Glass Rope	226876
80	82	378 912	Pilot/A.S.D. Assembly	235601
68	70	156 300	Gas Tap	234098
69	71	E01 617	Electro Magnetic Unit	239413
70	72	156 095	Micro Switch Assy	227761
78	80	156 094	Burner	225400
79	81	156 432	Coal Bed	236103
81	83	397 681	Injector Burner FO2	226910
82	84	378 988	Spark Generator	233254
87	91	387 916	Electrode Lead (2.8mm)	236184
83	85	386 129	Resistor 68 Ω	228955
72	74	205 723	Pilot Filter	082412

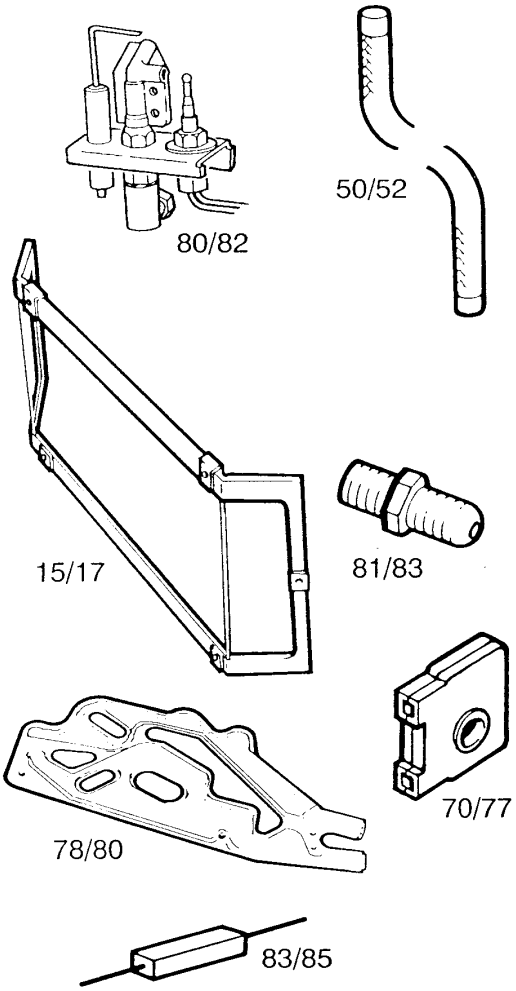

The following components are unique to the **VP3 PROPANE** appliance only:

Key N°s	G.C. N°	Description	Manufacturers Part N°
70	E00 855	Gas Tap (LPG)	237082
80	E00 857	Burner (LPG)	237433
81	E00 856	Coal Bed (LPG)	237432
83	387 857	Injector Burner (LPG)	228486
82	E00 858	Pilot/A.S.D. Assembly (LPG)	237079

spares & parts online IBASIS.CO.UK

PROPANE Cat II 2H3P – Page 35
Supplementary Instructions

Heat Input	High	Med-High
kW	6.05	5.34
Btu/h	20,642	18,220
Heat Input	Med	Low
kW	3.35	2.47
Btu/h	11,430	8,427
Heat Output		High
kW		3.63
Btu/h		12,385
Supply Pressure		
mbar	37	
in wg	14.8	
Setting Pressure		Cold
mbar		34.2 ± 1.5
in wg		13.7±0.6

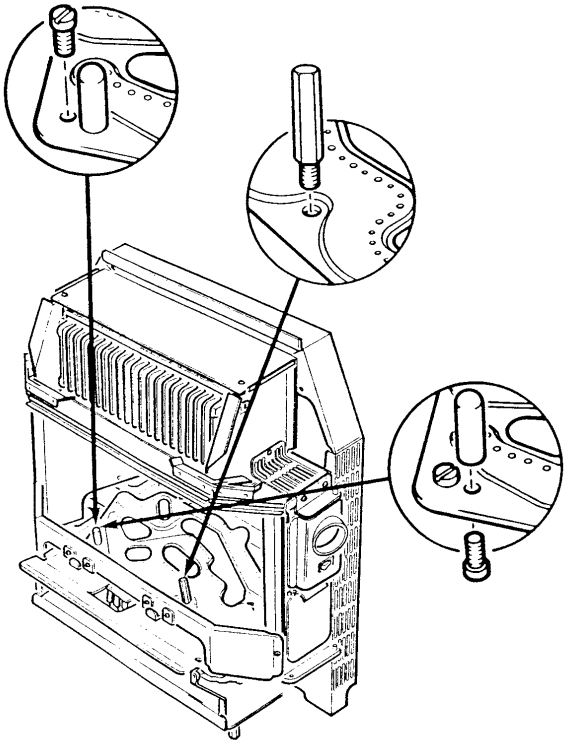

BERMUDA VP3 - G.C.N° 37 077 72
GAS TYPE G31

These supplementary instructions should be read in conjunction with the Fire Installation and Servicing Instructions and cover certain features unique to the Propane appliance.

This model to be used only with the Bermuda 553 Propane.

The Heat Input, Heat Output and Setting Pressures given in the Instructions Booklet do not apply to the Propane appliance. Refer to the table opposite.

Propane appliances can be converted to operate on Natural Gas if required.
A conversion kit is available, Baxi Part No 247064.

Burner Removal

(See page 27 and read instruction 4 in conjunction with the paragraph below.)

The left hand locating pin does not secure the burner to the support bracket. To remove the burner, unscrew the right hand locating pin and the set screw at the left hand side.

Burner Replacement

When replacing the burner remove the left hand locating pin from the old burner and refit to the new burner.

(See page 27 for re-assembling all components in the reverse order to dismantling.)

Renewal Firefront – Page 36

It is important that the existing installation is correct and that the flue is performing satisfactorily. Any remedial work necessary should be completed before the new appliance is commissioned. Please read the
Important Information section on page 4.

WARNING: Renewal firefronts are fitted with an Atmospheric Sensing Device (A.S.D.). If they are installed in conjunction with a boiler NOT fitted with an A.S.D. (i.e. 401, 552, 45/3 & 57/3), under adverse flue conditions the boiler WILL NOT shut down.

NOTE: A permanent live is required for correct operation of the firefront.

Additional Installation Instructions

Bermuda VP3 Renewal G.C.N° 37 075 04A
Bermuda SP3 Renewal G.C.N° 37 075 05A

The kit supplied with Renewal appliances provides all the necessary components to fit a Baxi Bermuda VP3 Renewal & Baxi Bermuda SP3 Renewal firefront to the following Bermuda Boilers.

The Renewal Fires may use with the following Boilers:

Bermuda 401	G.C.N° 44 077 49
Bermuda 552	G.C.N° 44 077 50
Bermuda 45/3 M	G.C.N° 44 077 61
Bermuda 45/3 E	G.C.N° 44 077 60
Bermuda 57/3 M	G.C.N° 44 077 63
Bermuda 57/3 E	G.C.N° 44 077 62
Bermuda 45/4 M	G.C.N° 44 077 71
Bermuda 45/4 E	G.C.N° 44 077 73
Bermuda 57/4 M	G.C.N° 44 077 72
Bermuda 57/4 E	G.C.N° 44 077 74

Existing Fire

REMOVING THE EXISTING FIRE

Isolate the gas and electrical supply, including any permanent live, to the combined appliance.

Remove the controls cover panel from the front of the fire.

Remove the tap control knob. Disconnect the electrical socket from the fire plug if fitted. Remove the screws securing the outercase to the innercase. Lift off the outercase.

Turn the gas service tap to the “Boiler only” position by turning ¼ turn clockwise.

Remove the radiants if fitted.

Disconnect the supply pipe at the fire inlet.

Remove any screws securing the fire to the wall. Pull the fire forward until the flue spigot is clear of the boiler hood and lift away.

Remove and discard the fire supply pipe from the service gas tap. Disconnect and discard any electrical wiring between the boiler input terminal and the fire.

Boiler Modification

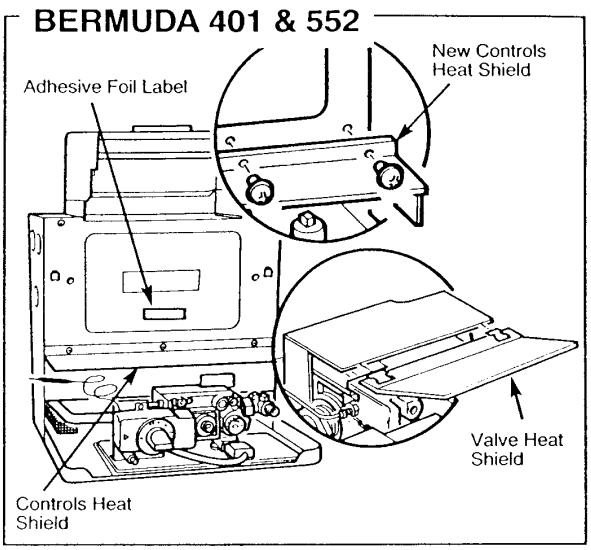

NOTE: It is important at this stage to fit the controls heat shield supplied with the fire unit to the boiler front panel.

Remove and discard the controls heat shield provided with the boiler and fit the new controls heat shield using the screws previously removed.
Fit the additional valve heat shield in position over the gas valve by engaging the two clips and pushing home as shown above.

Check the data badge on the back boiler. If the boiler internal wiring is not depicted, take the foil label from the kit and attach it below the data badge on the boiler front door.

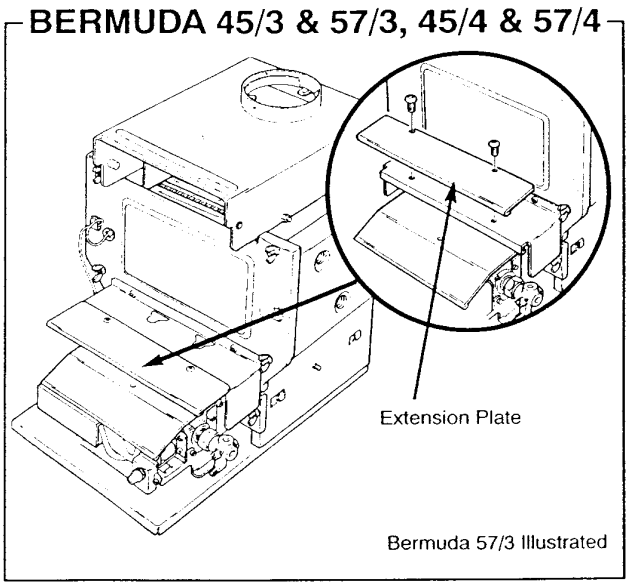

If a radiant firefront has been installed previously it will be necessary to unscrew and remove the extension plate from the boiler controls heat shield. Once removed this item can be discarded.

If the fire is wall mounted remove and discard the existing support frame (Bermuda 401 only). Retain the two support brackets. These will be needed in wall mounting the renewal fire.

If the fire is hearth mounted ensure that the base of the builders opening and the front hearth are at the same level.

Refer to “Site Requirements” (page 6) and prepare the wall surface to the dimensions specified.

WALL FIXING

Two wall fixing plates are supplied in the Renewal kit, one for Bermuda 401/552 and one for Bermuda 45/3, 57/3, 45/4 & 57/4.

BERMUDA 401 & 552

Take the fire support plate from the fire unit packaging and loosely attach it beneath the boiler base protruding from the fireplace opening using the M5 Nuts and screws provided. Use the centre group of holes at each side.

NOTE: If the fire is being used with a Bermuda 401 boiler unit, the support brackets from the previous plate must be fitted before the fire support plate can be fixed in place.

Push the support plate backwards until it touches the surround or wall face and tighten the screws to lock it in position.

BERMUDA 45/3 57/3 45/4 & 57/4

Take the fire support plate from the fire unit packaging and loosely attach it above the boiler base protruding from the fireplace opening using the screws provided. Use the slots at each side.

Push the support plate backwards until it touches the surround or wall face and tighten the screws to lock it in position.

WIRING

When connecting the firefront wire to the plug on the boiler base tray refer to pages 7-10 of these instructions.

FIRE SUPPLY PIPE

Two fire supply pipes are supplied in the Renewal Kit, one for Bermuda 401 & 552 and one for Bermuda 45/3, 57/3, 45/4 & 57/4. The smaller (6mm) diameter one is for Bermuda 45/3, 57/3, 45/4 & 57/4 installations.

TO CONTINUE FITTING THE FIREFRONT REFER TO THE INSTALLATION CHAPTER OF THESE INSTRUCTIONS.

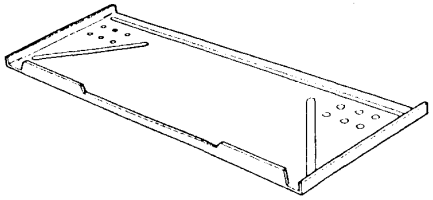

Fire Support Plate - Bermuda 401 & 552

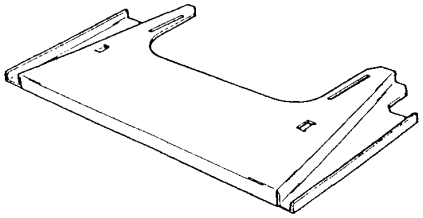

Fire Support Plate - Bermuda 45/3, 57/3 & 45/4, 57/4

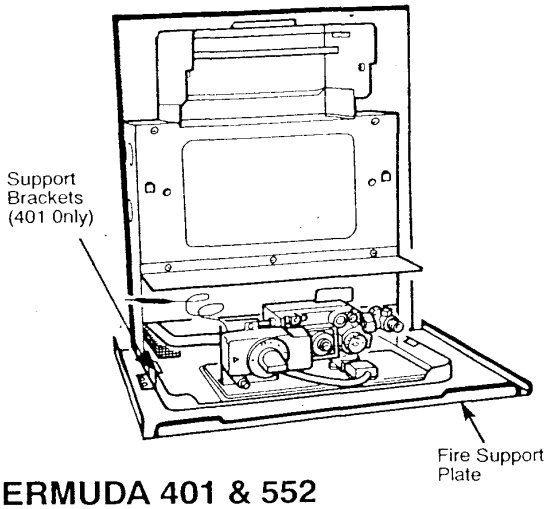

BERMUDA 401 & 552

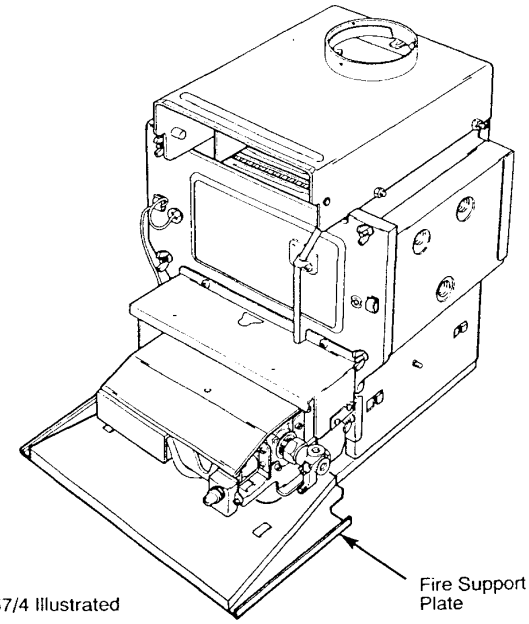

Bermuda 57/4 Illustrated

BERMUDA 45/3 & 57/3, 45/4 & 57/4