Please leave these instructions with the User.

Baxi Boston 2 OF

Floor Standing Open Flue
Gas Fired Central Heating Boilers
Natural Gas

Comp N° 235305 - Iss 8 - 4/00

Installation and Servicing Instructions

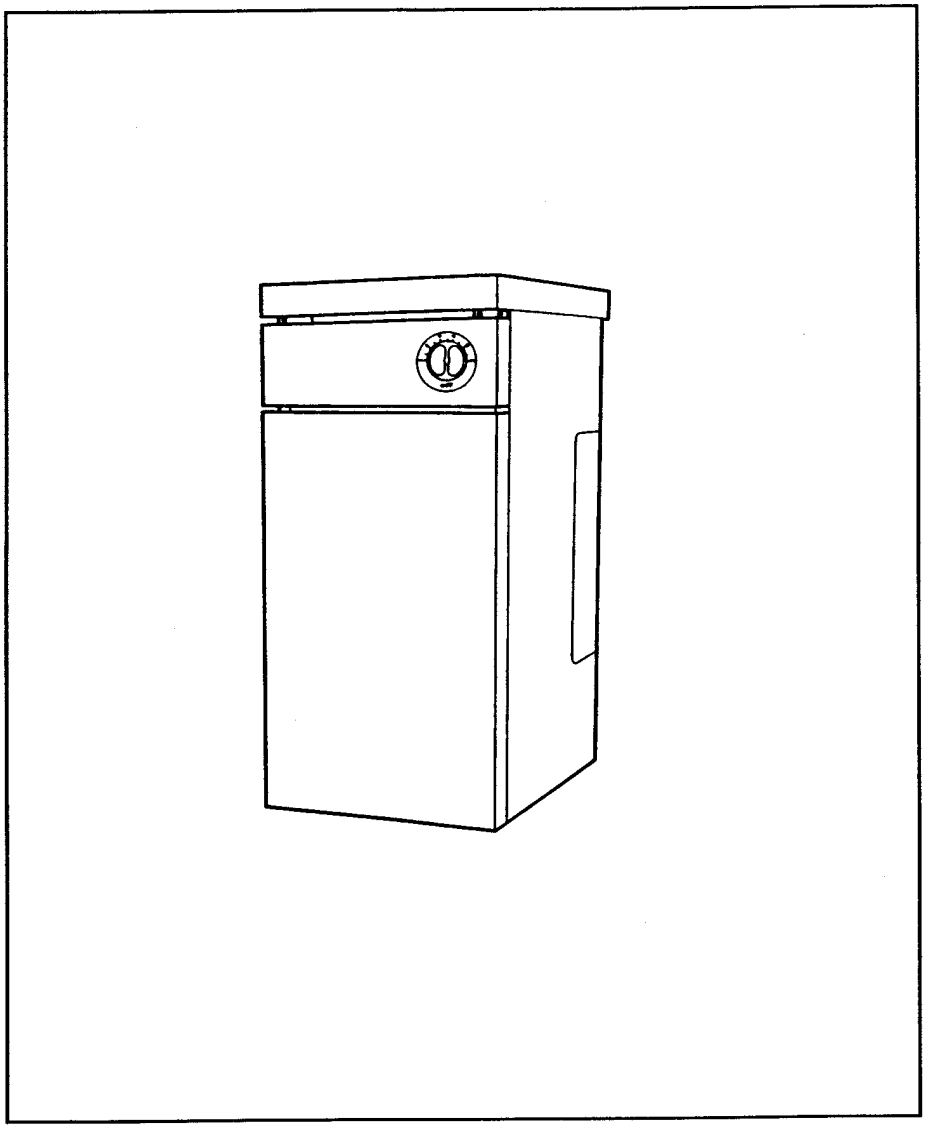

BAXI

spares & parts online IBASIS.CO.UK

Natural Gas

Baxi Boston 2 80 OF
G.C. N° 41 077 84

Baxi Boston 2 70 OF
G.C. N° 41 077 83

Baxi Boston 2 60 OF
G.C. N° 41 077 82

Baxi Boston 2 50 OF
G.C. N° 41 077 81

Baxi Boston 2 40 OF
G.C. N° 41 077 80

Baxi Limited is one of the leading manufacturers of domestic heating products in the UK.

Our first priority is to give a high quality service to our customers. Quality is built into every Baxi product - products which fulfil the demands and needs of customers, offering choice, efficiency and reliability.

To keep ahead of changing trends, we have made a commitment to develop new ideas using the latest technology - with the aim of continuing to make the products that customers want to buy.

Baxi is also the largest manufacturing partnership in the country. Everyone who works at the company has a commitment to quality because, as shareholders, we know that satisfied customers mean continued success.

We hope you get a satisfactory service from Baxi. If not, please let us know.

Baxi is a BS-EN ISO 9001
Accredited Company

INTRODUCTION

The Boston 2 OF is a range of Floor Standing Open Flue Boilers. There is a choice of outputs listed below:

BOILER TYPE	HEAT OUTPUT	
	kW	Btu/h
80 OF	20.81 to 23.45	71,000 to 80,000
70 OF	17.88 to 20.51	61,000 to 70,000
60 OF	14.95 to 17.58	51,000 to 60,000
50 OF	12.02 to 14.65	41,000 to 50,000
40 OF	9.08 to 11.72	31,000 to 40,000

The boilers share a common outer case within which there is adequate space to fit a central heating pump using standard fittings.

All appliances are designed for use on Gas Type G20 (Natural Gas) only, at supply pressure 20 mb.

Each appliance consists essentially of two components, namely:

1. COMBUSTION CHAMBER with heat exchanger, burner and controls.
2. OUTER CASE.

“Benchmark” Log Book

As part of the industry-wide “Benchmark” initiative all Baxi boilers now include an Installation, Commissioning and Service Record Log Book. Please read the Log Book carefully and complete all sections relevant to the appliance and installation. These include sections on the type of controls employed, flushing the system, burner operating pressure etc. The details of the Log Book will be required in the event of any warranty work. Also, there is a section to be completed at each subsequent regular service visit.

The boilers listed below meet requirements of Statutory Instrument ‘The Boiler (Efficiency) Regulations 1993 No 3083’ and therefore are deemed to meet the requirements of Directive 92/42/EEc on the efficiency requirements for new hot water boilers fired with liquid or gaseous fuels.

Boston 2 - 80 OF - G.C.N° 41 077 84
Boston 2 - 70 OF - G.C.N° 41 077 83
Boston 2 - 60 OF - G.C.N° 41 077 82
Boston 2 - 50 OF - G.C.N° 41 077 81
Boston 2 - 40 OF - G.C.N° 41 077 80

Type test for the purposes of Regulation 5 certified by:

NOTIFIED BODY 0086

Product/production certified by:

NOTIFIED BODY 0086

Installation Requirements - Page 3

GENERAL

The installation must be carried out by a Corgi Registered Installer or other competent person and be in accordance with relevant BS Codes of Practice, I.E.E. Regulations, Gas Safety Regulations, Building Regulations and by-laws of the Local Water Undertaking. References should be made to BS 6891, BS 6798, BS 5440 Pt 1 & 2, BS 5449, BS 5546 and BS 1363.

IMPORTANT INFORMATION

This product contains Refractory Ceramic Fibres (R.C.F.) which are man-made vitreous silicate fibres. Excessive exposure to these materials may cause temporary irritation to eyes, skin and respiratory tract. Care must be taken when handling these articles to ensure the release of dust or fibres is kept to a minimum. To ensure that the release of fibres from these articles is kept to a minimum, during installation and servicing it is recommended that a H.E.P.A. filtered vacuum is used to remove any dust, soot or other debris accumulated in and around the appliance. This should be performed before and after working on the installation. It is recommended that any replaced item(s) are not broken up but sealed within heavy duty polythene bags and clearly labelled “R.C.F. waste”. This is not classified as “hazardous waste” and may be disposed of at a tipping site licensed for the disposal of industrial waste. Protective clothing is not required when handling these articles but it is recommended that gloves are worn and the normal hygiene rules of not smoking, eating or drinking in the work area are followed and always wash hands before eating or drinking.

SITING

The boiler must be fitted on a suitable outside or inside wall with due considerations of the open flue requirements.

It should not be installed in a bathroom, bedroom or bed sitting room.

A new or existing cupboard or compartment used to enclose the boiler must be constructed specifically for this purpose.

Details of essential features of Cupboard / compartment design are given in BS 5440:2.

CLEARANCES

The minimum vertical areas required for the appliances depend on the appliance rating and its application. The details are given in Fig 5.

WORK TOPS	
ABOVE BOILER (ALL MODELS)	100mm (4 in)
SIDES	See Fig 5

VENTILATION

Detailed recommendations for air supply are given in BS 5440:2.

The following notes are intended to give general guidance. The room in which the open flue unit is situated requires an air vent which should be direct to outside or to a room which itself has an air vent direct to outside. Where the boiler is in a compartment with air vents direct to outside, the room containing the compartment does not require the provisions of additional ventilation.

The actual minimum effective area requirements of cupboard/compartment air vents are based upon the rated input of the appliance.

APPLIANCE	MINIMUM FREE AREA OF AIR VENT	
	cm²	in²
80 OF	102	16
70 OF	84	13
60 OF	74	11.5
50 OF	57	9
40 OF	39	6

We recommend the use of the Stadium BM729 “Black Hole” ventilator which is available from your local merchant.

Ventilation areas required:

APPLIANCE		HIGH LEVEL VENT AREA		LOW LEVEL VENT AREA	
		cm²	in²	cm²	in²
80 OF	Compartment vented to adjacent room	271	42	542	84
70 OF		232	36	464	72
60 OF		212	33	423	67
50 OF		176	27	353	55
40 OF		140	22	281	44
80 OF	Compartment vented to outside building	136	21	271	42
70 OF		116	18	232	36
60 OF		106	17	212	33
50 OF		88	14	176	27
40 OF		70	11	140	22

FLUE ARRANGEMENT

The 80, 70 OF are intended for connection with 125mm (5 in) flue tube. The 60, 50 and 40 OF are intended for connection with 100mm (4 in) flue tube.

For full information on flues refer to BS 5440, but the general requirements are as follows:

1) The flue should be kept as short and as warm as possible.
2) Give maximum possible vertical rise from the appliance before using any bends (preferably at least 600mm (24 in)). Avoid the use of right angled bends.
3) Terminate in an approved terminal preferably above ridge height but at least above the eaves of a pitched roof.
4) If Twin-wall type flue tubing is to be used the inner tubing of the boiler adaptor must not project into the draught diverter of the boiler. A boiler adaptor which meets this requirement is obtainable.
5) An existing brick chimney should be lined with acid and moisture resistant materials such as stainless steel flexible flue pipe. This is particularly important if the flue is above 6.5 metres (20 ft) in height and not wholly internal.
   WHETHER OR NOT THE CHIMNEY IS TO BE LINED IT MUST BE SWEPT THOROUGHLY BEFORE THE INSTALLATION.
6) Whatever type of flue is used it must be properly supported and not simply supported on the boiler.

Water Circulation Systems - Page 4

(see page 8)
The appliances are only suitable for connection to a cistern supply and can be used with:-

1) Open vented pumped domestic hot water and pumped central heating systems.

2) Gravity flow domestic hot water and pumped central heating systems.

(a) With 28mm pipes the minimum circulating head for gravity domestic hot water should not be less than 1m (3ft 3in) measured vertically from the flow connection on the boiler to the flow connection on the cylinder. At this head, the maximum horizontal distance measured along the run of the pipe should not exceed 3m (10ft). Greater horizontal distances and smaller pipe sizes are acceptable with suitably increased heads. Allowances must be made for pipe bends where necessary.

(b) If the above conditions are not easily met then pumped primaries should be used.

(c) Gravity flow and return pipes should be laid to maximum fall to avoid air locks.

The following points are of particular importance:

1) THE WATER SPREADER MUST BE FITTED TO THE PUMPED RETURN CONNECTION ON ALL SYSTEMS.
2) The appliances must not be used on sealed systems.
3) The system must be designed to avoid reverse circulation.
4) The static head must not exceed 30m (100ft) of water.
5) The boilers must only be used with an indirect cylinder when domestic hot water is required.
6) Drain points should be fitted at the lowest points in the system.
7) The system must be designed such that gravity circulation in the heating system does not take place when the pump is not running.
8) In systems using non-metallic pipework it is necessary to use copper pipe for the boiler Flow and Return. The copper must extend at least 1 metre from the boiler and include any branches.

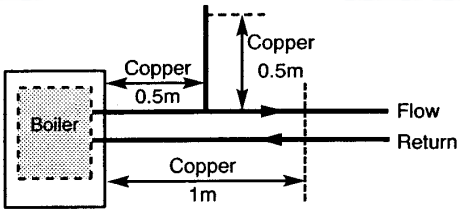

GAS SUPPLY

The gas connection is located at the bottom left hand side of the appliance and is Rc ½(½in B.S.P.T. internal). Ensure that the pipework from the meter to the appliance is of adequate size. Do not use pipes of a smaller size than the appliance gas connection.

ELECTRICAL SUPPLY

External wiring must be correctly earthed and polarised and in accordance with I.E.E. Regulations.

For wiring instructions see 'Electrical Connections'.

Treatment of Water Circulating Systems

For optimum performance after installation, this boiler and its associated central heating system must be flushed in accordance with the guidelines given in BS7593:1992 "Treatment of water in domestic hot water central heating systems".
This must involve the use of a proprietry cleanser, such as BetzDearborn's Sentinel X300 or X400, or Fernox's Superfloc. Full instructions are supplied with the products but for immediate information please contact BetzDearborn on 0151 420 9563, or Fernox on 01799 550811.
For long term protection against corrosion and scale, after flushing it is recommended that an inhibitor such as BetzDearborn's Sentinel X100, or Fernox's MB-1 or Copal is dosed in accordance with the guidelines given in BS7593:1992.
Failure to flush and add inhibitor to the system may invalidate the appliance warranty.

APPLIANCE DETAILS (all models)

HEIGHT	900mm (35 ½in)
WIDTH	395mm (15 ½in)
FORWARD PROJECTION FROM THE WALL	535mm (21 in).
BOILER TAPPINGS	4 x Rp1 (1 in BSP internal) and 1 x Rp ¾(¾in BSP internal)
ELECTRICAL SUPPLY	230V~50Hz - 3 amp fuse
GAS CONNECTION	RC ½(½in BSPT internal)
MAX. WORKING HEAD	30m (100ft)
THERMOCOUPLE OUTPUT	10 - 15mv

APPLIANCE	WEIGHT EMPTY	WATER CONTENT
80 OF 70 OF	95.8 kg (211 lbs)	7 litres (1.54 gallons)
60 OF 50 OF 40 OF	77.6 kg (171 lbs)	5.1 litres (1.12 gallons)

HYDRAULIC RESISTANCE CHARTS

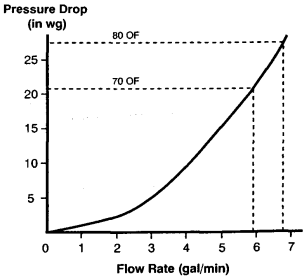

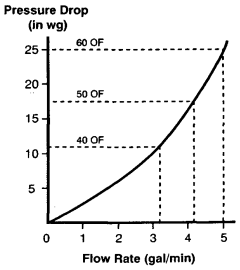

Fitting the Appliance - Page 5

PREPARATION

1) A sound and level floor which conforms to the requirements of the Local Authorities and Building Regulations must be provided.
2) Select the most suitable position for the boiler taking due account of any clearances required for the safe and proper functions of the boiler and its associated controls.
3) Manoeuvre the boiler into position so that the two spacer pips on the rear of the draught diverter touch the wall.
4) Connect the water flow and return pipes (see Boiler Connections).
5) Connect the flue pipe, making sure that the flue trim is placed in position before the final connection is made.
6) Complete the gas connection to the boiler.
7) Partially fit the outer case.
8) Connect the electrical supply (see Electrical Connections).
9) Complete the installation (see Commissioning the Unit).
10) Complete the assembly of the outer case.

BOILER CONNECTIONS (Fig 3)

The boilers have 5 water connections:

2 x Rp1 (1 in BSP internal) return connections.
2 x Rp1 (1 in BSP internal) flow connections.
1 x Rp ¾(¾in BSP internal) flow connection.

The 1 x Rp ¾(¾in BSP internal) flow connection is for use when the pump is fitted inside the outer case. For other installations this connection must be plugged.
THE WATER SPREADER MUST BE FITTED TO THE PUMPED RETURN CONNECTION ON ALL INSTALLATIONS. THE MARKS ON THE SPREADER MUST BE BETWEEN THE TWO MARKERS ON THE COMBUSTION CHAMBER (Fig 4).
WARNING: Overtightening of the water spreader may damage the heat exchanger. Do not apply excessive amounts of sealing tape to the thread of the spreader.
The spreader has one mark on the 80, 70 and has two marks on the 60, 50, 40.

When installing the pipework ensure that:

a) Suitable union fittings are used at the first joint of all boiler connections.
b) The pipework will run through the cutouts provided in the outer case (Fig 2).
c) Drain off points are provided as appropriate.
d) Pipe sizes are suitable for the system design.

Pump (Fig 1)

A suitable pump e.g. Grundfos UPS 15-50, 15-60 or equivalent Myson or Wilo with ball type isolating valves and 22mm compression fittings may be fitted inside the outer case.

The pump should be connected to the ¾in flow connection on the front of the heat exchanger using the following standard fittings.

A - 1 off - Elbow 3/4 BSP male x 3/4 BSP female
B - 1 off - Conex straight connector 3/4 BSP male x 22mm copper
C - 3 off - 22mm Yorkshire elbows
D - 1 off - when installing the 60, 50 and 40 60mm long - 22mm copper tube
D - 1 off - when installing the 80 and 70 92mm long - 22mm copper tube
E - 1 off - 100mm long - 22mm copper tube
F - 1 off - 145mm long - 22mm copper tube
G - 1 off - 42mm long - 22mm copper tube

The redundant flow connection(s) must be plugged.

Accuracy is important to avoid the pump and or pipework obstructing removal of the top panel of the combustion chamber, or fouling the top panel of the outer case.

OUTER CASE (Fig 6)

Assemble the outer case in the following manner:

1) Locate the RH side panel over the pegs at the RH side of the base and press downwards to secure. When fitting the panels if access is restricted the cutouts at the top of the back edge of the panels can be used to pass the case fixing brackets.
2) Secure the panel to the case fixing brackets with two of the six screws provided.
3) Repeat 1 & 2 with the LH side panel.
4) Secure the hinges of the facia panel to the two side panels using two of the six screws provided.
5) At this point the electrical connections to the facia panel can be made and the appliance can be commissioned. (See 'Electrical Connections' and 'Commissioning the Appliance').
6) Swing the facia panel upwards and secure to the side panels using the two screws retained to the control facia.
7) Lift trim clear of flue connection on the boiler and locate the top panel on the top of the side panels and press down to secure. Re-position the trim in the cutout on the top panel.
8) Hook the bottom edge of the front panel over the lugs on the base and swing the top edge back till the pegs at the top of the panel locate in the corresponding holes. Press to secure.

GAS CONNECTION (Fig 3)

Adapt the gas supply 15mm (½in BSP) within the outer case making the gas connection to the service tap provided.

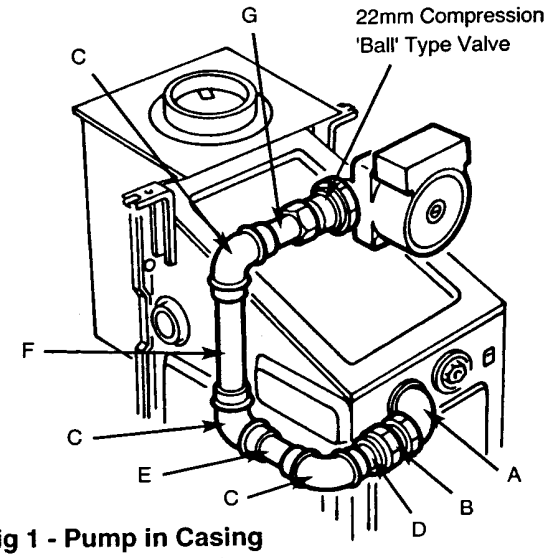

fig 1 - Pump in Casing

fig 2 - Outer Case

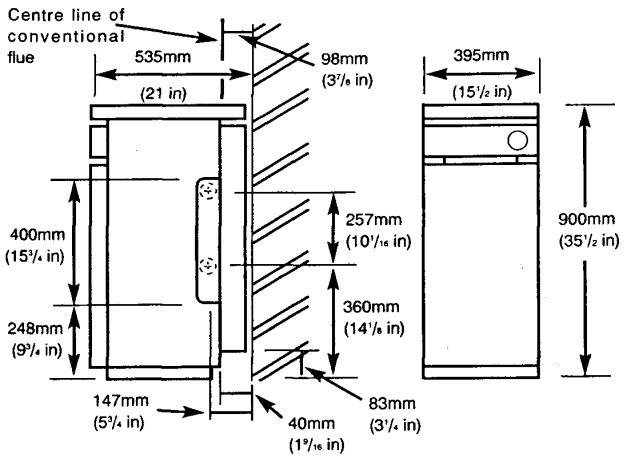

fig 3 - Boiler Connections

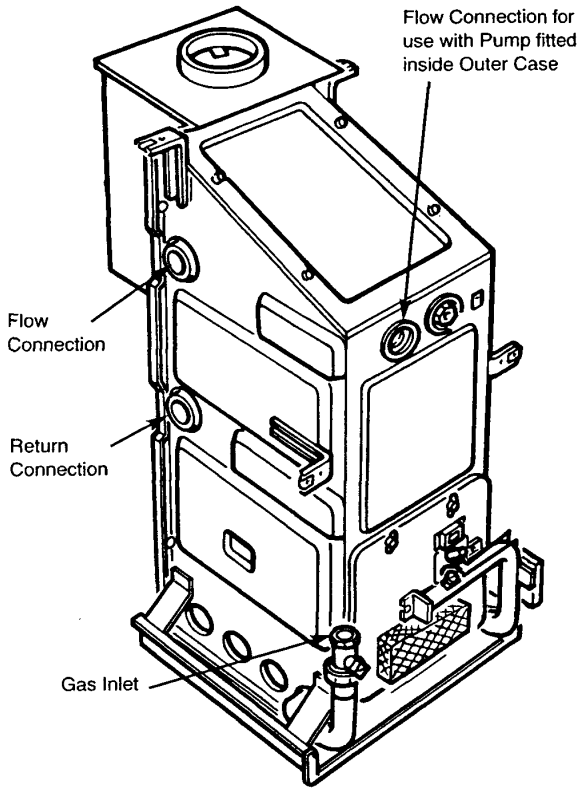

fig 4 - Spreader in Pumped Return Connection

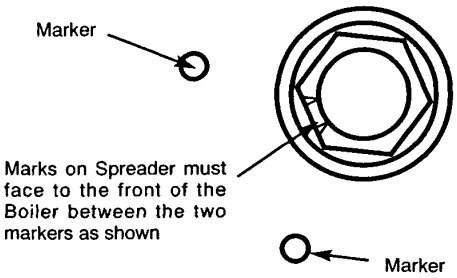

fig 5 - Clearances - Work Tops

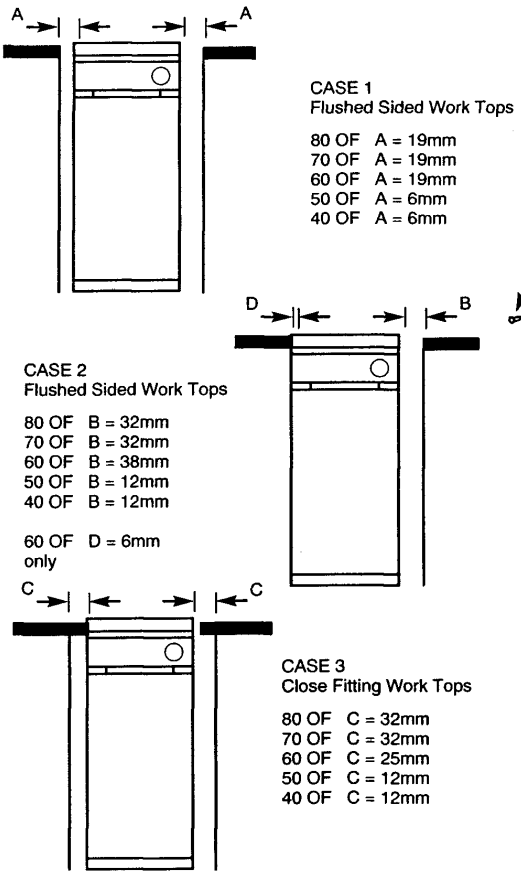

fig 6 - Outer Case Assembly

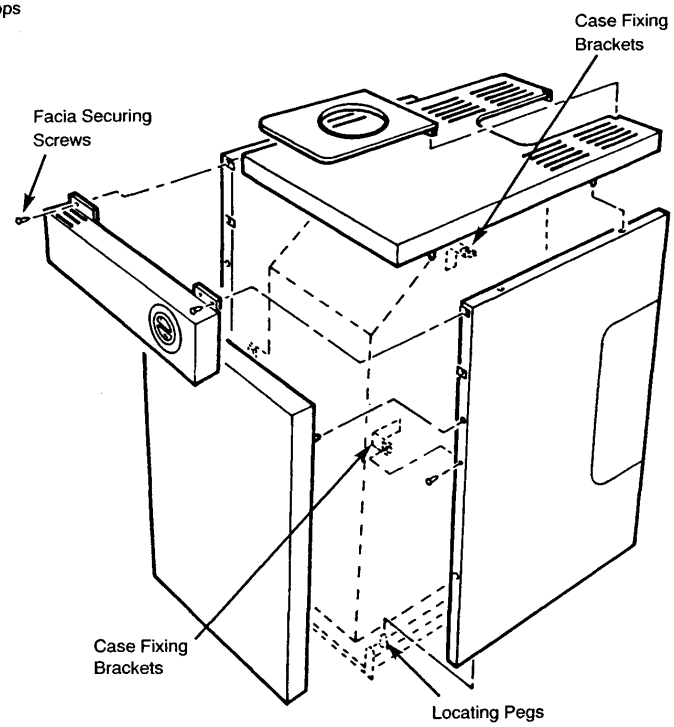

Electrical Connections - Page 7

THIS APPLIANCE MUST BE EARTHED

GENERAL

The mains supply required is 230V ~ 50 Hz fused at 3 amps. A double pole switch of contact separation of 3mm in all poles should be provided in the installation or an unswitched socket outlet should be used. All external wiring shall be correctly earthed and polarised and be in accordance with I.E.E. Regulations.

Electrical supply to controls

The recommended cable for connection to the appliance is 0.5mm^2 16/.20 PVC to IEC 53 Code 227 (heat resistant).

The input cable should be secured with the cable clips provided and be laid to avoid contact with hot surfaces.

The length of the supply conductors between the cable grip and the terminals must be such that the current carrying conductors become taut before the earthing conductor if the cable should slip out of the cable grip.

1) With the outer case assembled as in 'Outer Case' 1-4 remove the 2 screws securing the thermostat cover to the facia panel.
2) Fit the input cable to the terminal strip and clamp using the cable grip provided and clamp the incoming cable into the cable clips provided on the outer case side panel so as to avoid contact with the hot combustion box surfaces.
3) Connect the 2 green and yellow earth wires halfway down the appliance wiring harness to the combustion chamber earth point on the outer case support bracket.
4) Fit the socket at the end of the wiring harness to the plug attached to the burner feed pipe and clip the wire to the cable clips provided.
5) Refit the thermostat cover to the facia panel.
6) Push the thermostat phial into the thermostat pocket and clip the capillary behind the retaining clip (Fig. 8).

INTERNAL WIRING

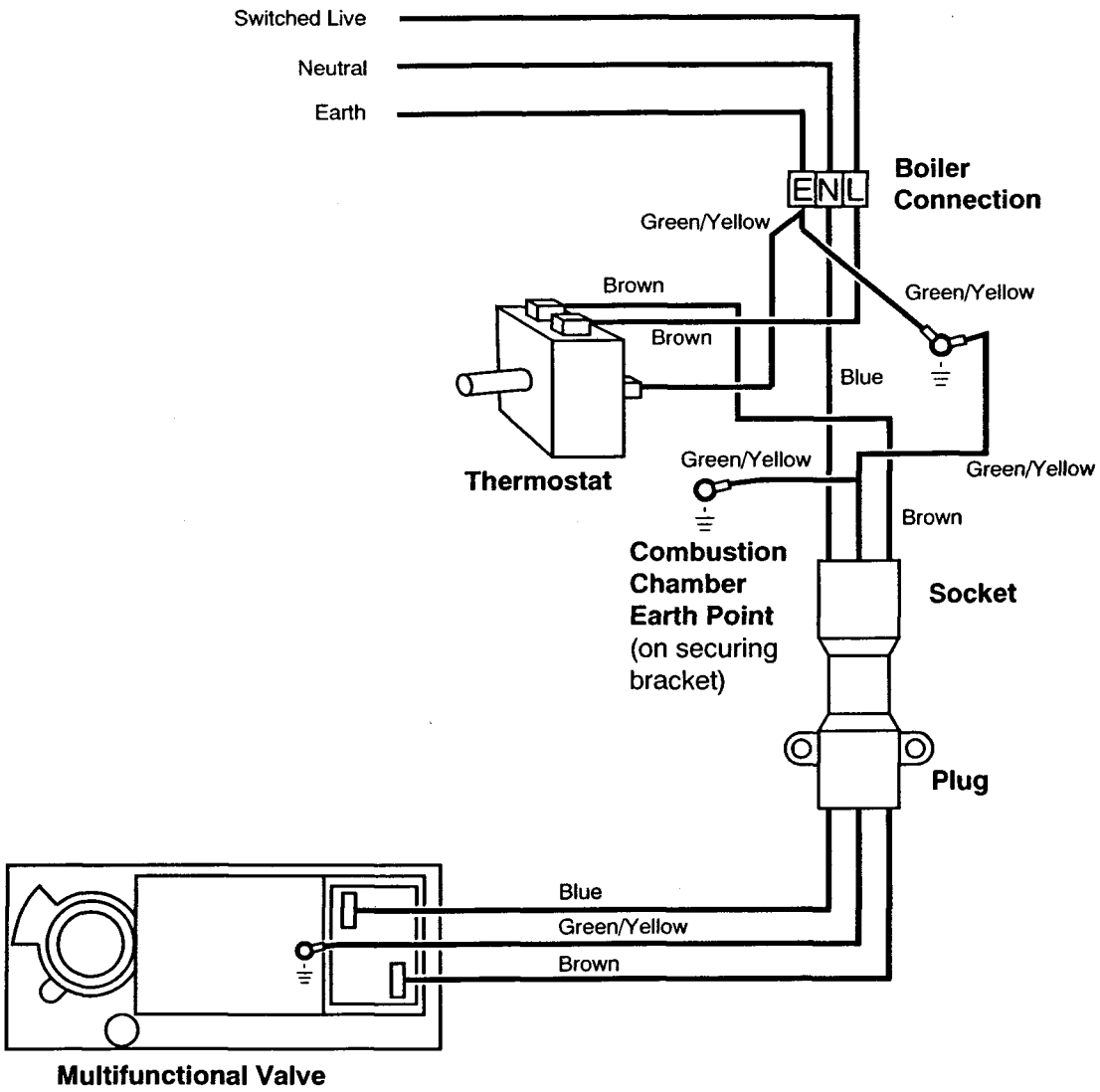

Notes for Guidance - Page 8

PIPE SIZING

a) The sizes of flow and return pipes from the boiler should be determined by normal methods according to the requirements of the system. Normally the pump should be set to give a 11°C (52°F) drop across the system with the gas rate of the boiler adjusted to the output required.

b) The open vent pipe must be a minimum of 22mm and must rise continuously to above the feed tank. The flow pipe from the boiler may form part of the open vent. No part of the open vent should contain a valve.

c) The 15mm cold feed pipe should not include a valve unless required by the local water authority.

DOMESTIC HOT WATER

An indirect cylinder must be used. If a self priming indirect type is employed it must be of adequate size and applied strictly in accordance with the cylinder manufacturers' instructions.

FUEL ECONOMY

Better fuel economy is achieved by exercising control of the boiler by means of a room thermostat and or a cylinder thermostat as appropriate.

ALLOWING THE BOILER TO CYCLE ON THE BOILER THERMOSTAT DOES NOT PRODUCE THE BEST RESULTS. SIMILARLY FOR ECONOMY AND BOILER PERFORMANCE THE SYSTEM SHOULD BE DESIGNED SO THAT GRAVITY CIRCULATION IN THE HEATING CIRCUIT DOES NOT TAKE PLACE WHEN THE PUMP IS NOT RUNNING.

IMPORTANT: Gravity Flow and Return connections must be taken from the same side of the boiler.

Fully Pumped System
(Diagrammatic)

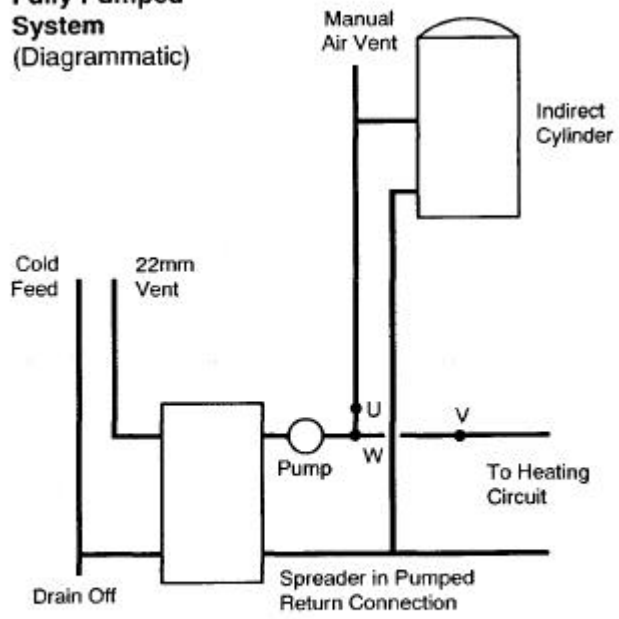

Gravity Domestic Hot Water
(Diagrammatic)

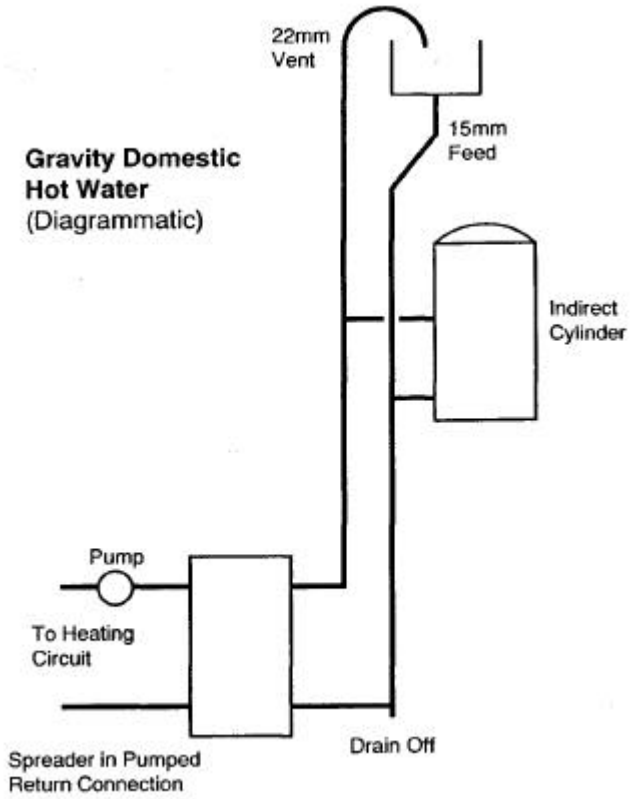

In both cases the cold feed pipe which is the neutral point of the system is shown directly behind the pump to avoid sub atmospheric pressure (air entrainment) in the system.

Commissioning the Unit - Page 9

Reference should be made to BS 5449: section 5 when commissioning the boiler and system.

Flush the whole system in accordance with BS 7593:1992. (See Treatment of Water Circulating Systems on page 4).

Check the system for leaks.

Turn the gas service cock fully anti-clockwise.

Purge the air from the gas service pipe in accordance with BS 6891 and test for gas soundness.

Turn the boiler thermostat to the OFF position.

Ensure that all external controls e.g. room thermostat, timer, etc., are calling for heat and turn on the mains electrical supply.

Remove the test point sealing screw and connect a pressure gauge.

Hold in the ON/OFF button on the gas control valve.

Press the piezo igniter button and release. Repeat until pilot lights. Hold in the grey ON/OFF button for a further 20 seconds and then release. The pilot light should then remain alight. If not, turn the grey button clockwise and wait 3 minutes before repeating the sequence.

The pilot flame should be without a yellow tip and be approximately 25mm (1 in) long.

Operate the burner by turning the boiler thermostat knob to the HIGH setting and check the operation of the flame failure device by turning the grey ON/OFF button clockwise. The burner and the pilot should extinguish.

Turn the boiler thermostat to the OFF position. Wait 3 minutes and re-light the pilot as previously described.

Operate the burner and allow the system to reach normal operating temperature. Make further checks for leaks and check the burner setting pressure, adjusting if necessary.

This is done by adjusting the throttle screw (red plastic surround) in either direction as required.

Remove the pressure gauge and tighten the pressure test point sealing screw.

The boiler and system should be run and then flushed and treated in accordance with BS 7593:1992 and the flushing agent/inhibitor manufacturers instructions. When all the air has been removed from the water circuit, the pump and radiators should be balanced to achieve the design temperature drop across the system.

Recheck the system for leaks.

Turn the boiler thermostat to the required setting.

Complete the assembly of the outer case as described in 'Outer Case' (Fig. 6).

9. Carefully read and complete all sections of the "Benchmark" Installation, Commissioning and Service Record Log Book that are relevant to the appliance and installation. The details of the Log Book will be required in the event of any warranty work. The Log Book must be handed to the user for safe keeping and each subsequent regular service visit recorded.

Instruct the user in the use of the unit. Please leave these instructions, the users instructions and the log book with the user.

NOTE: In the event of an electrical fault after the installation of the appliance, preliminary electrical system checks must be carried out (i.e. Earth continuity, polarity and resistance to earth).

Model	Maximum Input	Setting Pressure	Minimum Input	Setting Pressure	Injector Size
80 OF	29.86 kW (101,887 Btu/h)	15.7mbar (6.3 in wg)	27.13 kW (92,571 Btu/h)	12.6mbar (5.0 in wg)	6 x 1.8
70 OF	26.20 kW (89,398 Btu/h)	13.8mbar (5.5 in wg)	23.07 kW (78,718 Btu/h)	10.6mbar (4.3 in wg)	6 x 1.7
60 OF	22.50 kW (76,773 Btu/h)	16.2mbar (6.5 in wg)	19.41 kW (66,230 Btu/h)	11.4mbar (4.6 in wg)	6 x 1.55
50 OF	18.78 kW (64,100 Btu/h)	16.2mbar (6.5 in wg)	15.58 kW (53,195 Btu/h)	11.4mbar (4.6 in wg)	6 x 1.4
40 OF	14.95 kW (51,020 Btu/h)	15.2mbar (6.1 in wg)	11.69 kW (39,888 Btu/h)	9.7mbar (3.9 in wg)	6 x 1.3

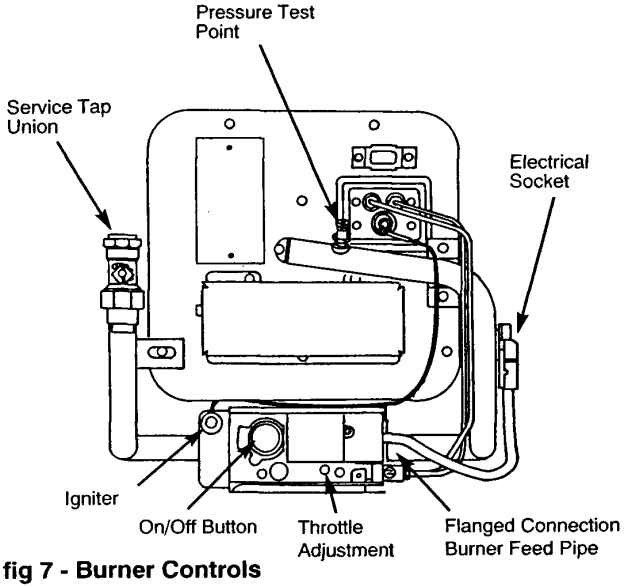

fig 7 - Burner Controls

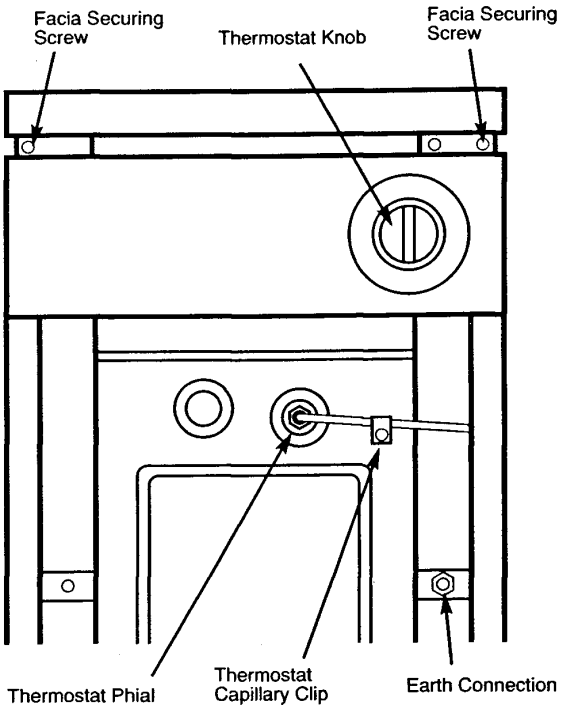

fig 8 - Boiler Thermostat

Servicing the Unit - Page 10

(See 'BOILER SERVICING GUIDE' label on the boiler)

Before servicing the appliance please read the Important Information section on page 3.

After servicing, complete the relevant section of the "Benchmark" Installation, Commissioning and Service Record Log Book. This should be in the possession of the user.

For economy and safety reasons, it is important to service the appliance regularly.

1) Turn off the electrical supply to the boiler.
2) Remove the front panel of the outer case by pulling forwards at the top and lifting upwards.
3) Lift trim on flue pipe connection clear of the top panel and remove the top panel of the outer case by pulling upwards.
4) Turn off the gas supply at the service tap and disconnect the union (Fig 7).
5) Disconnect the electrical socket by pulling upwards (Fig 7).
6) Remove the four wing nuts and carefully withdraw the burner and controls assembly. Remove the terminals from the thermocouple interrupter (Fig 12).
7) Release the two screws securing the front insulation assembly and remove the assembly (Fig 9).
8) Remove the four thumb screws securing the top inspection panel (Fig 10). Remove the retaining bracket and remove the casting baffles.
9) Clean the fins of the heat exchanger with a stiff bristle brush. Clean out any deposits that have collected in the bottom of the combustion box ensuring that the two air openings in the base are clear.
10) Remove any debris that may have collected under the combustion box.
11) Check all the insulation panels for damage, replace if necessary. Refit the front insulation panel, casting baffles and retaining bracket the top inspection panel.
12) Clean the burner as follows:
    a) Pull and release the lint arrester from the front of the combustion box panel held in position by two spring clips. This can be cleaned by thoroughly washing and then allowed to dry.
    b) Disconnect the burner by removing the 3 securing screws (Fig 11).
    c) Brush any deposits from the blades and ensure none of the ports are blocked. Clean any deposits from the venturi.
    d) Remove the injector from the inlet manifold, clean carefully and replace.
13) Clean the pilot as follows: Unscrew the pilot tubing nuts at both ends and remove the pilot tube. Remove and clean the pilot injector and clean the pilot shroud (Fig 12).
14) Re-assemble the pilot components and then the burner in reverse order of dismantling.
15) Refit the burner and controls assembly checking that the door seal is undamaged. Replace if necessary. Reconnect the T.T.B. terminals.
16) Reconnect the gas union at the service tap. Turn on the tap and check for gas soundness.
17) Refit the electrical socket and turn the thermostat to the OFF position.
18) Refit the outer case top panel.
19) Hold in the grey on/off button on the gas control valve (Fig 7). Press in the igniter button and release. Repeat until the pilot lights. Hold in the on/off button for a further 20 seconds and then release. The pilot should then stay alight.

    (IF THE PILOT FAILS TO REMAIN ALIGHT, TURN THE GREY ON/OFF BUTTON FULLY CLOCKWISE AND RELEASE, WAIT 3 MINUTES AND START AGAIN FROM 19.) The flame should be without a yellow tip and be approximately 25mm (1 in) long. No adjustment of the pilot flame is necessary as the pilot jet is sized to give the correct flame length at 20 mbar (8 in wg) inlet pressure.
20) Turn on the electricity supply to the boiler.
21) Remove the pressure test point screw (Fig 7). Connect a pressure gauge and operate the burner by turning the thermostat knob to its highest setting.
22) Check that the pressure corresponding to the range rated output is correct for the installation (see data label). If necessary adjust the appliance throttle (Fig 7).
23) Turn the boiler thermostat to the OFF position and refit the pressure test point screw.
24) Turn the boiler thermostat to its original setting.
25) Replace the outer case front panel.
26) Complete the relevant section of the "Benchmark" Installation, Commissioning and Service Record Log and hand it back to the user.

fig 9 - Insulation Combustion Box Door

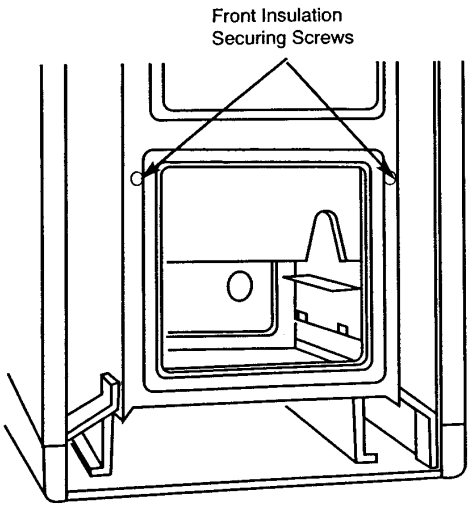

fig 10 - Baffle Securing Screws

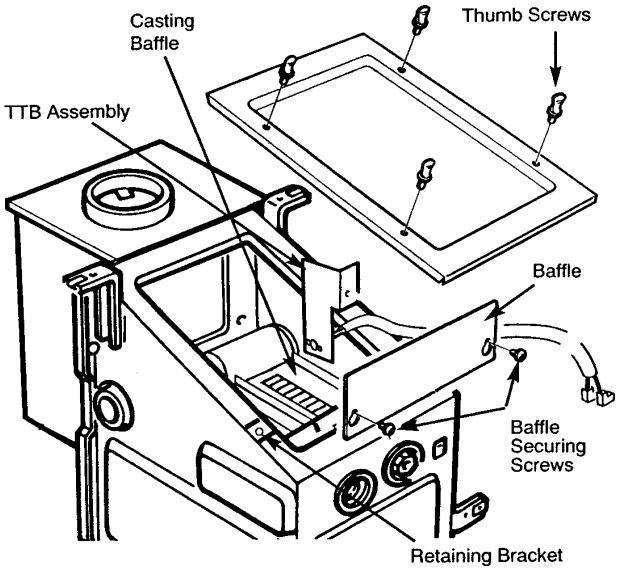

fig 11 - Door/Burner (60/50/40)

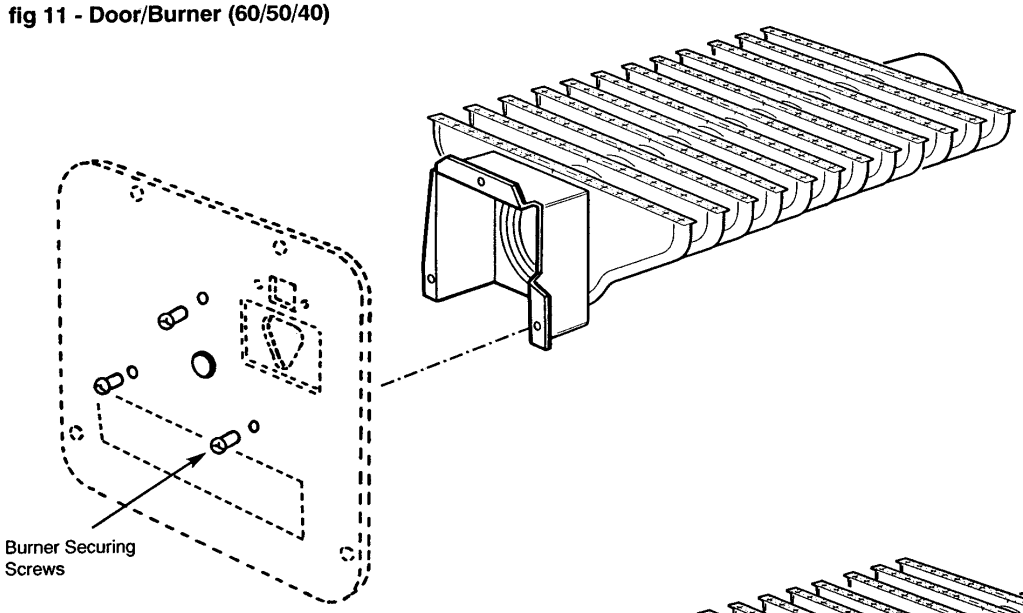

fig 11 - Door/Burner (80/70)

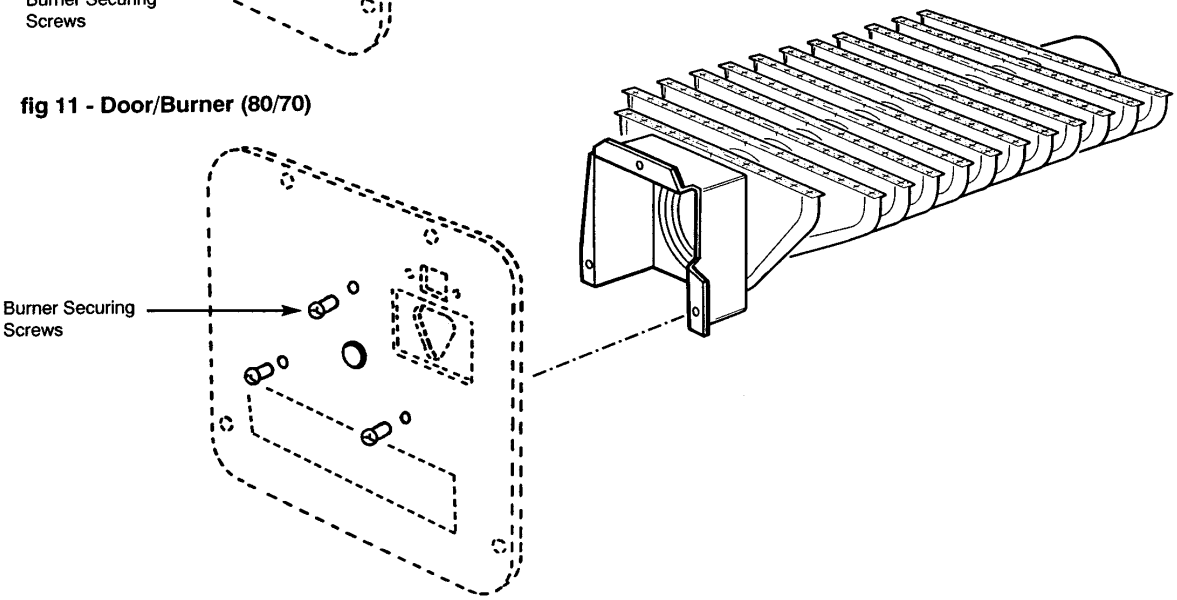

Changing Components - Page 12

When changing components ensure that electrical and gas supplies are isolated.

Before changing any components please read the Important Information section on page 3

THERMOCOUPLE

1) Remove the outer case front panel by pulling forwards at the top and lifting upwards.
2) Turn off the gas supply at the service tap or at the ON/OFF button on the gas valve.
3) Release the thermocouple nut at the side of the gas valve from the interrupter adaptor (Fig. 12).
4) Release the thermocouple nut at the pilot bracket.
5) Re-assemble in reverse order of dismantling.

THERMOCOUPLE RE-ROUTE DEVICE

1) Remove the burner and controls assembly as described in steps 1 to 6 - Servicing the Unit**.**
2) Remove valve heat shield.
3) Release thermocouple nut and interrupter device from the valve (Fig 12).
4) Disconnect the re-route nut.
5) Remove terminal cover and re-route device.
6) Re-assemble in reverse order of dismantling.

INJECTOR

1) Remove the burner and controls assembly.
2) Remove the burner securing screws and remove the burner (Fig 11).
3) Unscrew the injector from the feed pipe.
4) Re-assemble in reverse order of dismantling.

BURNER

1) Remove the burner and controls assembly.
2) Remove the burner securing screws and remove the burner (Fig 11).
3) Re-assemble in reverse order.

T.T.B. ASSEMBLY (Fig 12)

1) Disconnect the two terminals from the thermocouple interrupter on the valve.
2) Remove the leads from their clips on the boiler.
3) Remove the four screws securing the top inspection panel.
4) Slacken the R.H. baffle securing screw. **There is no baffle on 80 & 60 models.**
5) Lift the T.T.B. bracket upwards to disengage it from the screw.
6) Withdraw the complete assembly out through the combustion box.
7) Reassemble in reverse order of dismantling.

BOILER THERMOSTAT

1) Remove the outer case front panel by pulling forwards at the top and lifting upwards.
2) Remove the outer case top panel by pulling upwards.
3) Remove the two facia retaining screws (Fig 8) taking care not to lose the two spacer washers and allow the facia to swing forwards on its hinges.
4) Release the thermostat capillary from behind its retaining clip and remove the thermostat phial from the boiler (Fig 8).
5) Remove the screws securing the thermostat cover to the facia.
6) Disconnect the three spade electrical terminals from the thermostat.
7) Pull off the thermostat knob and remove the locknut securing the thermostat to the facia panel.
8) Re-assemble in reverse order of dismantling ensuring that the thermostat phial is replaced into the thermostat pocket.

GAS VALVE (Fig 12)

1) Remove the burner and controls assembly as described in steps 1 to 6 - **Servicing the Unit.**
2) Disconnect the thermocouple nuts at the valve and at the pilot bracket.
3) Disconnect interrupter adaptor.
4) Disconnect the pilot feed pipe at the valve and at the pilot bracket ensuring that the pilot injector is not misplaced.
5) Disconnect the electrode lead and remove the piezo unit.
6) Remove the screw securing the electrical terminal cover to the gas valve. Disconnect the electrical connections.
7) Remove the valve complete with the heat shield and inlet pipe by disconnecting the flanged burner feed pipe (Fig 7).
8) Disconnect the flanged inlet pipe. Retain the O rings for re-assembly but replace if damaged.
9) Remove the heat shield by undoing the retaining screws.
10) Release the thermocouple re-route nut and remove the re-route.
11) Individual sub components of the valve may be replaced as outlined by Honeywell instructions.
12) Re-assemble in reverse order of dismantling.

INSULATION IN COMBUSTION BOX

1) Remove the burner and controls assembly as described in steps 1 to 6 - Servicing the Unit**.**
2) Release the 2 screws securing the front insulation assembly and remove the assembly (Fig 9).
3) Remove the two screws and air guides securing the two side insulation panels (Fig 13) and carefully remove diagonally through the door opening.
4) Remove the two screws and washers securing the back panel insulation (Fig 13).
5) Remove the ceramic insulation pad from the front insulation assembly by bending the securing tabs.
6) 60, 50, 40 OF only - Remove the two sloping panels of insulation adjacent to the heat exchanger by removing four screws and washers. Ease out the bottom edge of the insulation panel and slide down (Fig 13).
7) Replace insulation as necessary and bend down securing tabs where applicable.
8) Re-assemble in reverse order of dismantling taking care not to damage the new insulation.

PIEZO UNIT (Fig 12)

1) Remove the burner and controls assembly as described in steps 1 to 6 - **Servicing the Unit.**
2) Disconnect the electrode lead at the piezo unit.
3) Remove the nut securing the piezo unit to the heat shield and remove the piezo unit.
4) Re-assemble in reverse order of dismantling.

SPARK ELECTRODE (Fig 12)

1) Remove the burner and controls assembly as described in steps 1 to 6 - **Servicing the Unit.**
2) Disconnect the electrode lead at the electrode.
3) Remove the nut securing the electrode and remove the electrode.
4) Re-assemble in reverse order of dismantling.

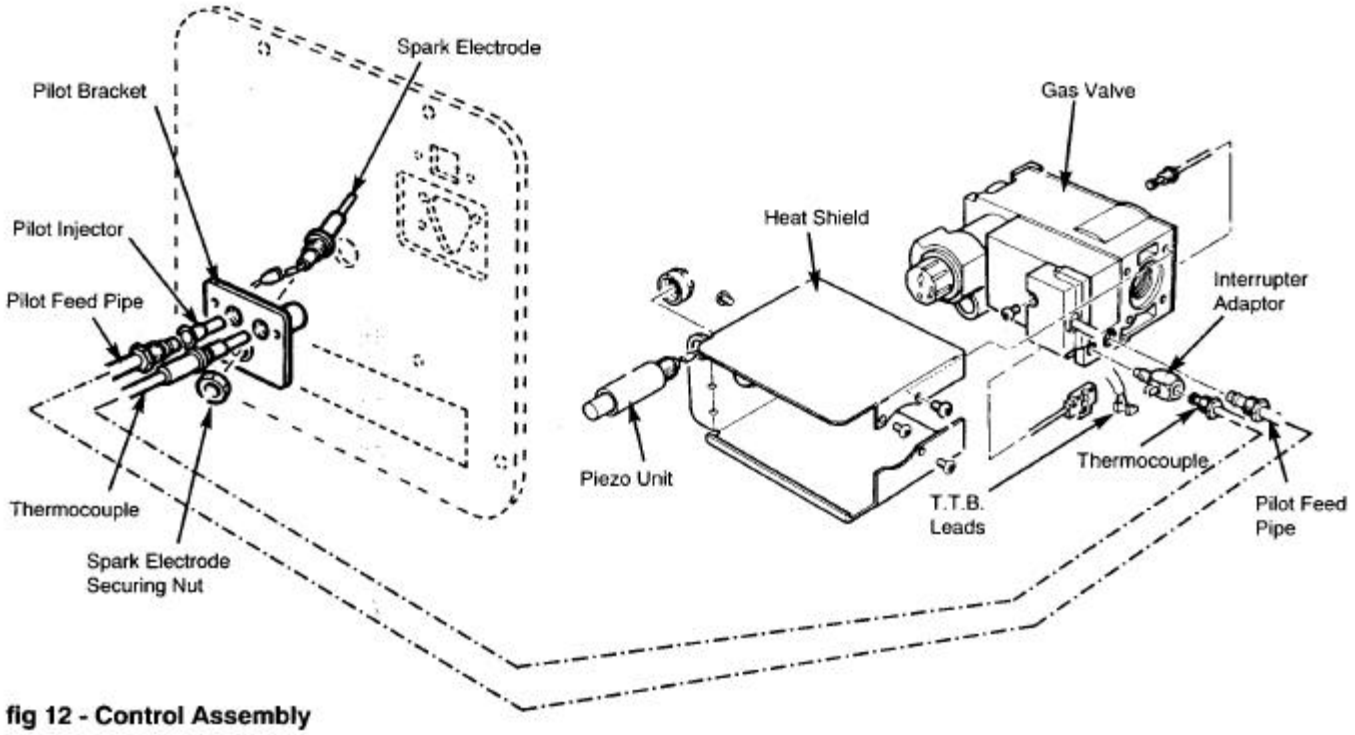

fig 12 - Control Assembly

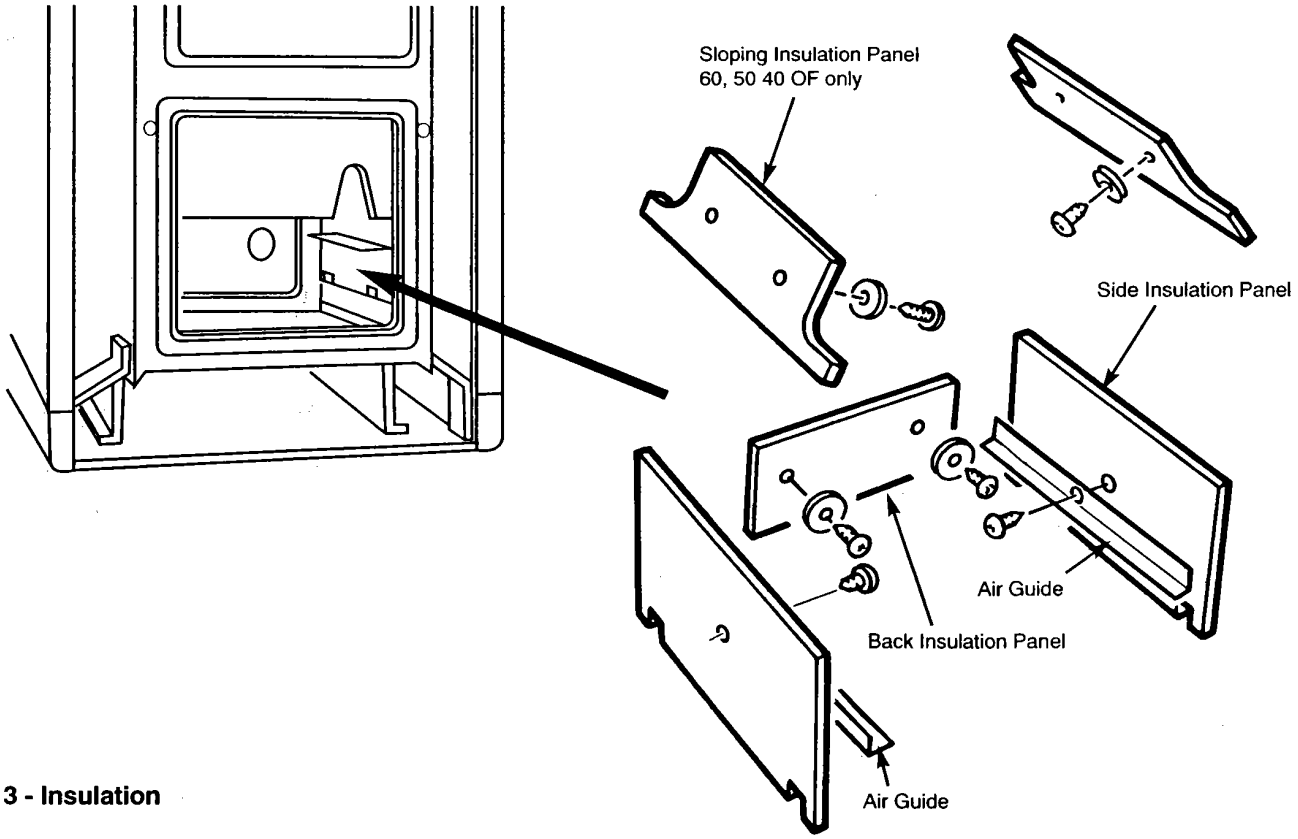

fig 13 - Insulation

Short Parts List - Page 14

BAXI BOSTON 2 - 80/70/60/50/40 OF
B.G.C. No 41 077 84/83/82/81/80

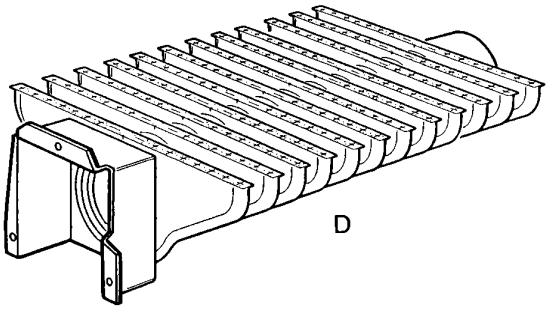

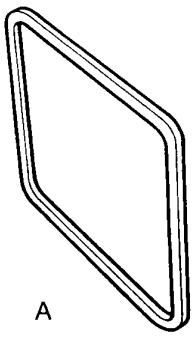

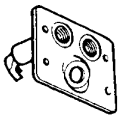

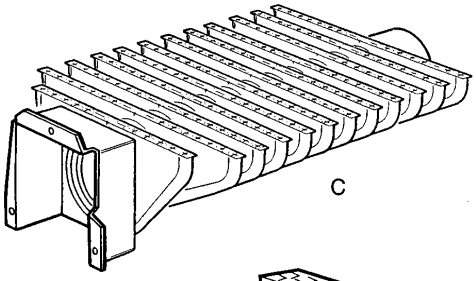

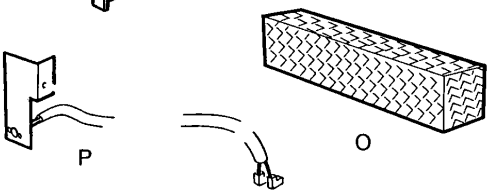

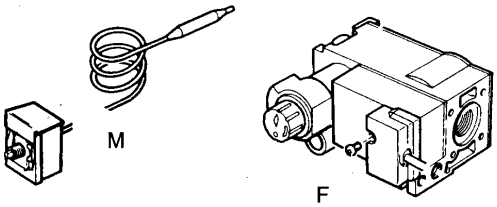

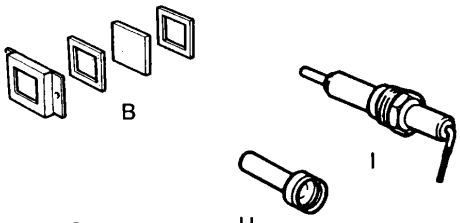

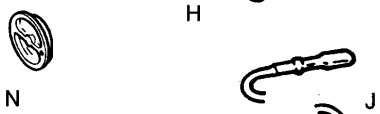

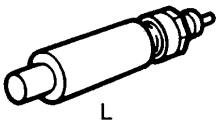

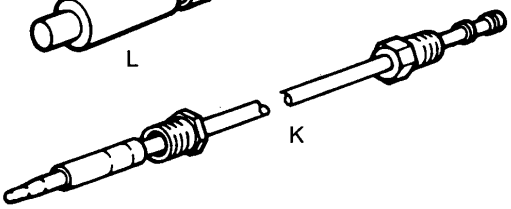

Model 60 50 40	80 70	Description	G.C. N°	Manufact'rs Part N°
Key N°				
A	A	Seal - Panel Door	364 260	112057
B	B	Kit - Sight Window	364 719	226114
	C	Burner - Boiler (70-80)	378 898	235262
D		Burner - Boiler (40-50-60)	378 899	234721
	E	Injector - Stereomatic (80 OF)	378 901	236246
	E	Injector - Stereomatic (70 OF)	378 902	236245
E		Injector - Stereomatic (60 OF)	364 330	112040
E		Injector - Stereomatic (50 OF)	364 331	112060
E		Injector - Stereomatic (40 OF)	364 332	112051
F	F	Valve - Control Honeywell V4600 T1037	379 810	233359
G	G	Burner - Pilot Honeywell Q349A 1059	170 580	236667
H	H	Injector - Pilot Honeywell 56/42 A	381 702	236107
I	I	Electrode - Pilot ignition Kigass E3356	387 852	102024
J	J	Lead - Electrode	183 628	042740
K	K	Thermocouple - 18" Honeywell Q3909 A	390 131	102005
L	L	Kit - Piezo Unit	183 936	040456
M	M	Thermostat – Kit Ranco	382 387	112025
N	N	Knob Thermostat	378 903	235303
O	O	Arrester Lint	364 340	110069
P(40,50)		T.T.B. Assembly (Black Sleeve)	170 560	236346
P(60,70,80)		T.T.B. Assembly (Red Sleeve)	170 561	236547

Click here for Helplines