Baxi Brazilia F5, F5S & F8S

Balanced Flue Gas Wall Heaters

Comp No. 243469 - Iss 1 - 6/99

Installation and Servicing Instructions

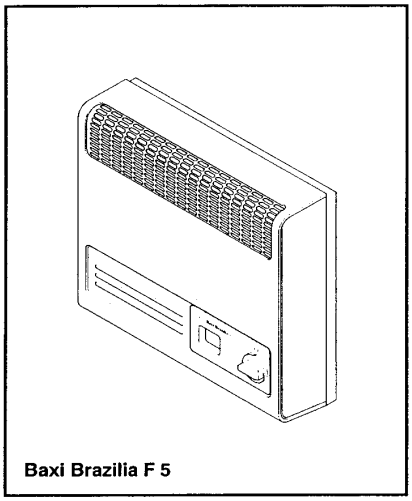

Baxi Brazilia F 5

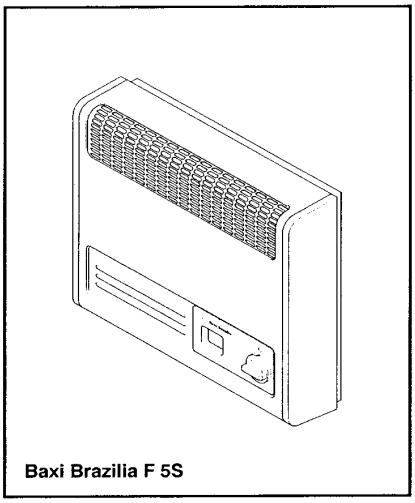

Baxi Brazilia F 5S

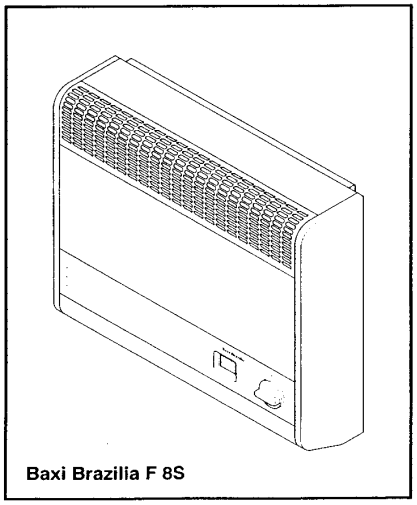

Baxi Brazilia F 8S

BAXI

Natural Gas

Baxi Brazilia F 5
G.C.No. 35 075 0lA

Baxi Brazilia F 5S Grey
G.C.No. 35 075 02A
Baxi Brazilia F 5S Mahogany
G.C.No. 35 075 02A
Baxi Brazilia F 5S Oak
G.C.No. 35 075 02A

Baxi Brazilia F 8S Grey
G.C.No. 35 075 03A
Baxi Brazilia F 8S Mahogany
G.C.No. 35 075 03A
Baxi Brazilia F 8S Oak
G.C.No. 35 075 03A

Propane

Baxi Brazilia F 5 Propane
G.C.No. 35 075 04A

Baxi Brazilia F 5S Grey Propane
G.C.No. 35 075 05A

Baxi Brazilia F 8S Grey Propane
G.C.No. 35 075 06A

Baxi Heating Ltd is one of the leading manufacturers of domestic heating products in the UK.

Our first priority is to give a high quality service to our customers. Quality is built into every Baxi product - products which fulfil the demands and needs of customers, offering choice, efficiency and reliability.

To keep ahead of changing trends, we have made a commitment to develop new ideas using the latest technology - with the aim of continuing to make the products that customers want to buy.

Baxi is also the largest manufacturing partnership in the country. Everyone who works at the company has a commitment to quality because, as shareholders, we know that satisfied customers mean continued success.

We hope you get a satisfactory service from Baxi. If not, please let us know.

For GB/IE only.

Baxi is a BS-EN ISO 9001
Accredited Company

Contents – Page 3

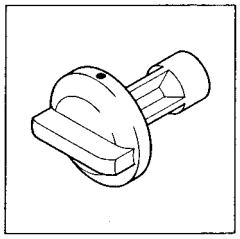

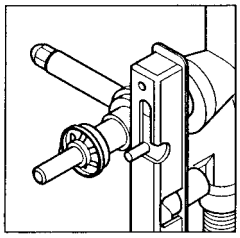

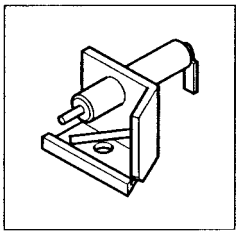

Section		Page
1.0	**Introduction**	4
2.0	**Technical Data**	5
3.0	**Site Requirements**	7
4.0	**Installation**	10
5.0	**Commissioning the Appliance**	11
6.0	**Annual ServIcing**	12
7.0	**Changing Components**	13
8.0	**Fault Finding**	15
9.0	**Short Parts List**	16

1.0 Introduction – Page 4

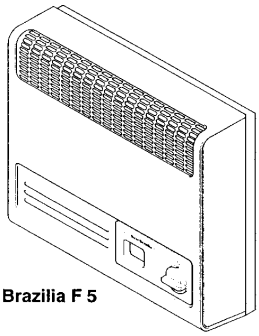

Baxi Brazilia F 5

Fig. 1

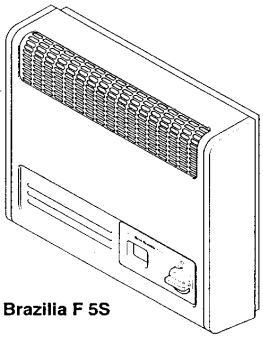

Baxi Brazilia F 5S

Fig. 2

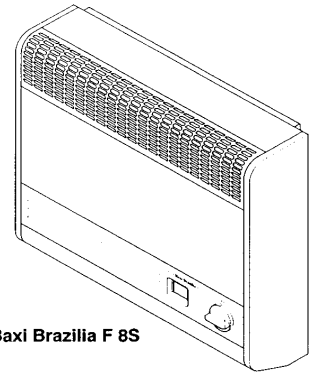

Baxi Brazilia F 8S

Fig. 3

1.1 Description

1. The Baxi Brazilia F is a range of room sealed gas convector appliances designed to be used with gas type G20 (Natural Gas) at supply pressure 20 mbar.

2. The Baxi Brazilia F range is also available for use with gas type G3t (Propane) at supply pressure 37 mbar. The procedure for installation, servicing etc. is the same for both Natural Gas and Propane models.

IMPORTANT: The appliance must only be used on its designated gas type. This is indicated on the data label.

3. The appliance provides warm air by natural convection and flueing is by means of a concentric balanced flue arrangement.

4. The appliance is controlled by a control knob which operates the ignition and alters the heat output. The control knob has five positions giving a choice of three output rates:

Position	**•**	**OFF**
Position	**I**	**LOW**
Position	**★**	**IGNITION**
Position	**II**	**MEDIUM**
Position	**III**	**HIGH**

1.2 Installation

1. The appliance is suitable for installation only in G.B. and I.E. and should be installed in accordance with the rules in force. For Ireland install in accordance with I.S.813 "**INSTALLATION OF GAS APPLIANCES".** The installation must be carried out by a CORGI Registered Installer or other competent person and be in accordance with the relevant requirements of **GAS SAFETY** (Installation and Use) **REGULATIONS** latest edition, the **BUILDING REGULATIONS** issued by the Department of the Environment, **BUILDING STANDARDS** (Scotland) (Consolidation) **REGULATIONS** issued by the Scottish Development Department and the **LOCAL BUILDING REGULATIONS**. Where no specific instructions are given, reference should be made to the relevant **BRITISH STANDARD CODES OF PRACTICE.**

2. This appliance must be installed in accordance with the manufacturers instructions and the rules in force.

3. Read the instructions before installing or using this appliance.

Notice

Discolouration of wall surfaces

Most heating appliances generate warm air convection currents and transfer heat to any wall surface against which they are situated.

Some soft furnishings (such as blown vinyl wallpapers) may not be suitable for use where they are subject to temperatures above normal room levels and the manufacturers advice should be sought before using this type of wall covering adjacent to any heating appliance.

The likelihood of wall staining from convected air currents will be
increased in environments where high levels of tobacco smoke or other
contaminants exist.

NOTE: All illustrations show F 55, unless otherwise indicated. The procedure for installation, commissioning, servicing etc. is the same for all Brazilia F models.

1.3 Important Information

This product Contains Refractory Ceramic Fibres (R.C.F.) which are man-made vitreous silicate fibres. Excessive exposure to these materials may cause temporary irritation to eyes, akin and respiratory tract. Care must be taken when handling these articles to ensure the release of dust or fibres is kept to a minimum. To ensure that the release of fibres from these articles is kept to a minimum, during installation and servicing it is recommended that a H.E.P.A. filtered vacuum is used to remove any dust, soot or other debris accumulated in and around the appliance. This should be performed before and after working on the installation. It is recommended that any replaced item(s) are not broken up but sealed within heavy duty polythene bags and clearly labelled R.C.F. waste". This is not classified as "hazardous waste" and may be disposed of at a tipping site licensed for the disposal of industrial waste. Protective clothing is not required when handling these articles but it is recommended that gloves are worn and the normal hygiene rules of not smoking, eating or drinking in the work area are followed and always wash hands before eating or drinking.

2.0 Technical Data – Page 5

F 5 & F 5S Natural Gas
Category of Appliance 1_{2H}
The appliance is set for Gas Type G20 at 20mbar.

Heat Input (gross)	High	Med	Low
kW	2.05	1.41	0.86
Btu/h	7,000	4,800	3,000

Heat Output (gross)	High	Med	Low
kW	1.5	0.98	0.57
Btu/h	5,100	3,350	1,950

Inlet Setting Pressure		Cold
	mbar	19.7 ± 0.75
	in wg	7.9 ± 0.3

Injector Size	CO_2
Nox Class	3
Gas Rate on HIGH	0.195 m^3/h (6.89 ft^3/h)
Gas Connection	R ¼ (¼ BSP external)
Ignition	Piezo Spark

Packed Weight	**5**	**5S**
	18kg (39.7 lbs)	18.4kg (40.6 lbs)

Dimensions	**5**	**5S**
Height	394mm	394mm
Width	426mm	450mm
Depth (from the wall)	126mm	128mm

Controls	Rotary gas tap allowing manual adjustment between low, medium and high output. Flame failure device.
Thermocouple Output	8-l3mv
Heat Exchanger	Cast Iron

F 8S Natural Gas
Category of Appliance 1_{2H}
The appliance is set for Gas Type G20 at 20mbar.

Heat Input (gross)	High	Med	Low
kW	3.06	2.21	1.27
Btu/h	10,440	7,540	4,333

Heat Output (gross)	High	Med	Low
kW	2.26	1.48	0.80
Btu/h	7,700	5,050	2,730

Inlet Setting Pressure		Cold
	mbar	19.25 ± 0.75
	in wg	7.7± 0.3

Injector Size	CO_1
Nox Class	2
Gas Rate on HIGH	0.29 m^3/h (10.28 ft^3/h)
Gas Connection	R ¼ (¼ BSP external)
Ignition	Piezo Spark

Packed Weight	**8S**
	24.4 kg (54 lbs)

Dimensions	**8S**
Height	430mm
Width	51 6mm
Depth (from the wall)	152mm

Controls	Rotary gas tap allowing manual adjustment between low, medium and high output. Flame failure device.
Thermocouple Output	8-l3mv
Heat Exchanger	Cast Iron

B.S. Codes of Practice

STANDARD	SCOPE
B.S. 68g1	Gas Installation.
B.S. 5440: Pt. 1	Flues.
B.S. 5871 Pt.1	Installation of fires, convector heaters

2.0 Technical Data – Page 6

F 5 & F 5S Propane
Category of Appliance I_{3P}
The appliance is set for Gas Type G31at 37mbar.

Heat Input (gross)	High	Med	Low
kW	2.05	1.41	0.86
Btu/h	7,000	4,800	3,000

Heat Output (gross)	High	Med	Low
kW	1.5	0.98	0.57
Btu/h	5,100	3,350	1,950

Inlet Setting Pressure		Cold
	mbar	36.5 ± 1
	in wg	14.6 ± 0.4

Injector Size	74	
Nox Class	3	
Gas Rate on HIGH	0.077 m^3/h (0.146 kg/h)	
Gas Connection	R ¼ (¼ BSP external)	
Ignition	Piezo Spark	
Packed Weight	**5** 18kg (39.7 lbs)	**5S** 18.4kg (40.6 lbs)
Dimensions Height Width Depth (from the wall)	**5** 394mm 426mm 126mm	**5S** 394mm 450mm 128mm
Controls	Rotary gas tap allowing manual adjustment between low, medium and high output. Flame failure device.	
Thermocouple Output	8-l3mv	
Heat Exchanger	Cast Iron	

F 8S Propane
Category of Appliance I_{3P}
The appliance is set for Gas Type G31 at 37mbar.

Heat Input (gross)	High	Med	Low
kW	3.06	2.21	1.27
Btu/h	10,440	7,540	4,333

Heat Output (gross)	High	Med	Low
kW	2.26	1.48	0.80
Btu/h	7,700	5,050	2,730

Inlet Setting Pressure		Cold
	mbar	36.5 ± 1
	in wg	14.6 ± 0.4

Injector Size	90	
Nox Class	2	
Gas Rate on HIGH	0.115 m^3/h (0.218 kg/h)	
Gas Connection	R ¼ (¼ BSP external)	
Ignition	Piezo Spark	
Packed Weight	**8S** 24.4 kg (54 lbs)	
Dimensions Height Width Depth (from the wall)	**8S** 430mm 516mm 152mm	
Controls	Rotary gas tap allowing manual adjustment between low, medium and high output. Flame failure device.	
Thermocouple Output	8-l3mv	
Heat Exchanger	Cast Iron	

B.S. Codes of Practice

STANDARD	SCOPE
B.S. 6891	Gas Installation.
B.S. 5440: Pt. 1	Flues.
B.S. 5871 Pt.1	Installation of fires, convector heaters

3.0 Site Requirements – Page 7

3.1 Location

1. The appliance must be fitted on a suitable outside wall to meet the requirements of the balanced flue arrangement.

2. For applications involving walls constructed from or comprising of combustible material, reference should be made to the requirements of B.S. 5871 and Building Regulations.

3. Building Regulations will require the flue duct to be separated from any combustible material within the wall by a non-combustible sleeve enclosing an annular air space of at least 25mm (1 in) around the flue duct.

4. If the outer face of the wall is combustible, a plate of metal (or other non-combustible material) should be fitted over the flue duct extending at least 50mm (2 in) around the terminal.

5. Further guidance on timber frame construction is given in the Institute of Gas Engineers UP7. “Guide for Gas Installations in Timber Framed Dwellings”.

IMPORTANT: LPG Models. This appliance must not be installed below ground in basements, cellars, etc. unless these are open to ground level on one side. For further guidance see BS 5871 Pt. 1.

3.2 Clearances

1. The appliance must be fitted on a vertical flat non-combustible wall. Any combustible wall coverings should be removed from within the area of the outer case.

2. Internally the appliance must not be fitted under a shelf or sill which has a projection of more than 150mm (6 in).

3. Curtains or a shelf must not be closer than 140mm (5 ½ in) (F 5 & 5S), 89mm (3 ½ in) (F 8S) from top of outer case.

4. The bottom of the outer case must be a minimum of 72mm (2 7/8 in) from the floor. Subject to this minimum dimension it is recommended that the appliance is fitted as close to the floor as possible for optimum distribution of heat.

5. Minimum side clearance form any wall or fixed furniture to the outer case is:

Left hand side:	45mm (1 ¾ in)
Right hand side:	57mm (2 ¼ in)

3.0 Site Requirements – Page 8

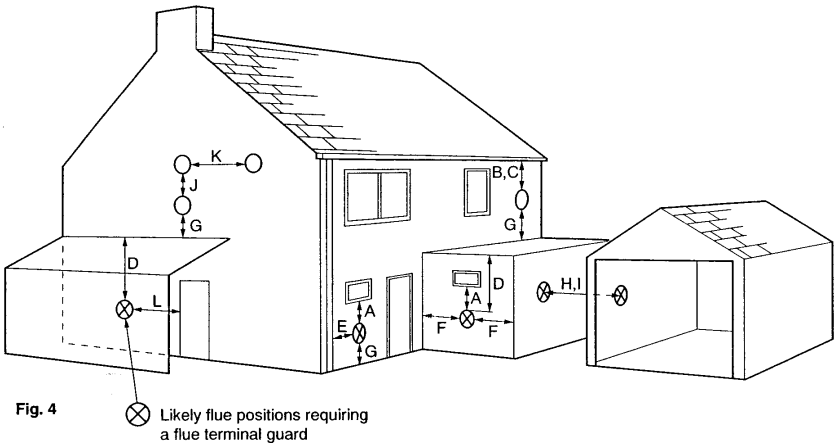

Fig. 4

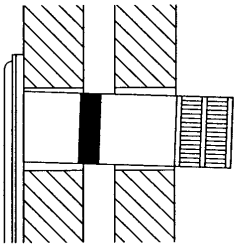

Fig. 6 (side view). Angle of drop shown exaggerated.

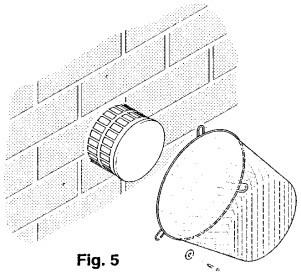

Fig. 5

	Terminal Position with Minimum Distance	(mm)
A	Directly below an openable window or other opening, e.g. an air brick.	300
B	Below gutters.	300
C	Below eaves, soil pipes or drain pipes.	300
D	Below balconies or car port roof	600
E	From vertical drain pipes and soil pipes.	75
F	From internal or external corners.	600
G	Above ground, roof or balcony level.	300
H	From a surface facing a terminal.	600
I	From a terminal facing a terminal.	600
J	Vertically from a terminal on the same wall.	1500
K	Horizontally from a terminal on the same wall.	300
L	For an opening in a car port (e.g. door, window) into a dwelling.	1200

WARNING: 520-610mm Flues are not suitable for Cat I_{3+} (Butane/Propane) appliances

Flue Option	Brazilia F Gas Categories					
	Propane Cat I_{3P}		Natural Cat I_{2H}		Butane/Propane Cat I_{3+}	
125mm-229mm (5in - 9in)	Part N° 225174	Part N° 243842	Part N° 225174	Part N° 243842	Part N° 225174	Part N° 243842
381mm-483mm (15in - 19in)	Part N° 225175	Part N° 243857	Part N° 225175	Part N° 243857	Part N° 225175	Part N° 243857
520mm-610mm (20½in - 24in)	Part N° 243849	Part N° 243848	Part N° 243849	Part N° 243848	Not Available	

3.3 Flue Position

1. The siting of the balanced flue terminal must meet the following conditions:

a. Where the flue terminal of the appliance is beneath any opening (that is to say, any part of a window capable of being opened, or any ventilation inlet or similar opening) no part of the terminal shall be within 300mm (1 ft), measured vertically from the bottom of the opening.

b. Where the flue terminal of the appliance is less than 2m (6 ft) above the level of any ground, balcony, flat roof or place to which any person has access and which adjoins the wall in which the flue terminal is situated, the terminal shall be protected by a guard.

c. The guard must be screwed to the wall over the flue terminal and be at least 50mm (2 in) clear of any part of the terminal. A suitable guard is available direct from Baxi Heating, Part No. 080266 (Fig. 5).

d. Not within. 300mm (1 ft) of ground level.

2. Fig. 4 shows the positioning of the flue terminal relative to buildings and other structures.

3. If the outer face of the outside wall is of combustible material (timber, etc.) a metal or other non-combustible material plate should be fitted round the flue terminal so that it extends not less than 50mm (2 in) around the terminal. A 179mm (7 in) square or a 230mm (9 in) diameter circular plate will meet the requirement.

4. The flue should run horizontally, or with a slight drop to the terminal, in order to prevent rain entry (Fig. 6).

3.4 Flue Dimensions

1. The standard appliance is supplied with flue ducting which is adjustable to accommodate wall thicknesses from 248 mm (93/a in) to 349mm (133h in).

2. Three further flue terminals are available as optional extras to suit the wall thicknesses indicated in the table opposite.

3.0 Site Requirements – Page 9

3.5 Ventilation

1. The appliance is room sealed and therefore requires no purpose built ventilation.

2. It is intended for use in habitable rooms, and must not be filled in cupboards or confined compartments.

3.6 Gas Supply

1. The inlet connection R ¼ (¼ BSP external) is located on the gas tap at the bottom right hand side of the appliance.

2. A gas service cock must be filled in the supply to the appliance with a disconnecting union between the service cock and the inlet connection.

NOTE: If the gas supply is run either to the left or right on leaving the appliance, at least the first 51mm (2 in) from the inlet connection must run vertically downwards to avoid the outer case fouling the gas supply.

4.0 Installation – Page 10

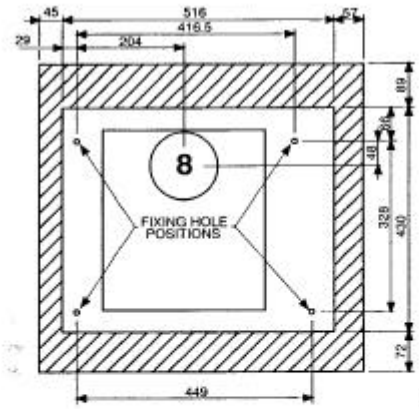

Fig. 7 (F 8S)

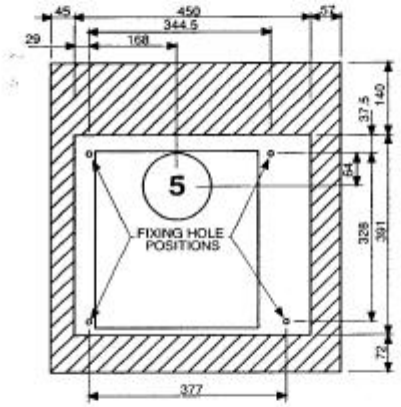

Fig. 8 (F 5 & F 5S)

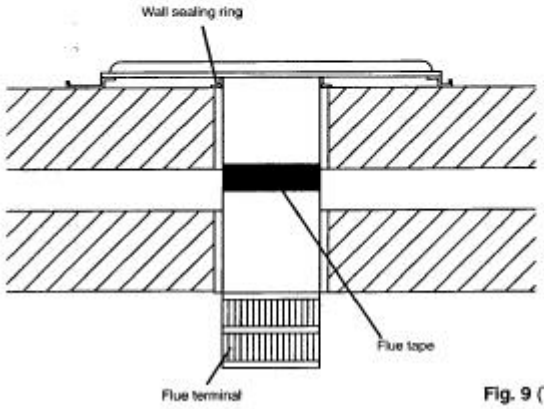

Fig. 9 (Top View)

4.1 Preparation

1. Ensure that the length of the flue ducting is suitable for the wall thickness.

2. Select a position for the appliance. Using the template supplied, mark the position of the flue ducting and the four fixing holes. Ensure that the template is vertical (Fig. 7 or 8 depending on model).

3. Cut a neat hole 127 - 140mm (5 - 5 ½ in) in the wall for the flue.
4. Drill and plug the wall at the four fixing holes using a 6mm (¼ in) drill.

4.2 Fitting the Appliance

1. Slide the flue duct and terminal assembly into the flue outlet at the rear of the appliance. Ensure that the flue duct spotwelds are not at the bottom.

2. To determine the flue length, measure the wall thickness and add 20mm (¾ in). Adjust the distance from the back of the airbox and the joint between the terminal and air duct to this dimension. Using the length of flue tape provided fix this dimension by taping up the joint between the flue duct assembly and the flue outlet.

3. Offer the appliance up to the wall pushing the terminal and flue ducting through the wall.

4. Ensuring that the appliance is level, secure it wall sealing ring to the wall using four suitable screws and washers. Check that the wall sealing ring is correctly positioned and seals against the wall

5. Ensure that the flue terminal protrudes sufficiently on the outside wall face (Fig. 9). Make good as appropriate.

6. Connect the gas supply incorporating a gas service cock and a disconnecting union between the service cock and the inlet connection.

7. Check for gas soundness (B.S. 6891).

5.0 Commissioning the Appliance - Page 11

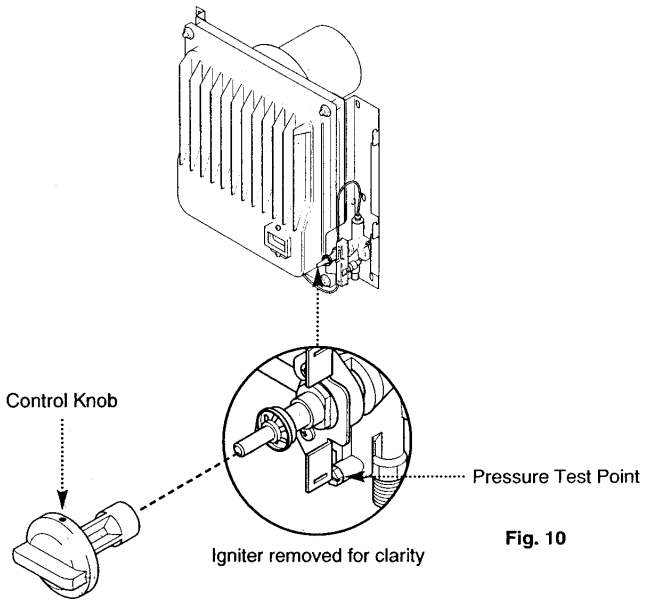

Fig. 10

N.G. Setting Pressure (Cold/High Rate)	
5 & 5S 19.7 ± 0.75mbar (7.9 ± 0.3in wg)	**8S** 19.25 ± 0.75mbar (7.7 ± 0.3in wg)

L.P.G. Setting Pressure (Cold/High Rate)	
5 & 5S 36.5 ± 1mbar (14.6 ± 0.4in wg)	**8S** 36.5 ± 1mbar (14.6 ± 0.4in wg)

Fig. 11

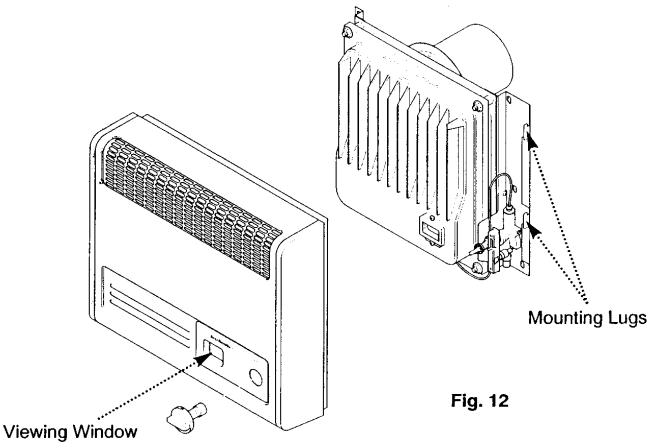

Fig. 12

5.1 Commissioning the Appliance

1. Turn on the gas service cock.

2. Fit the control knob onto the control tap spindle (Fig. 10).

3. Purge any air from the system.

4. Remove the pressure test point screw. Fit a pressure gauge to the pressure test point (Fig. 10).
Pressure Test Point

5. Push the control knob in and turn anticlockwise to the ignition (★) position. The main burner should light. Keep the control knob pushed in for 20 seconds. If the burner fails to remain alight repeat the procedure. Check that the gas supply is correct by measuring the pressure at the test point on the gas control tap.

6. No adjustment is provided on the appliance. If it is found that the test pressure is not within the tolerances given, consult the gas supplier.

7. Push in and turn the control knob back to the OFF position. Remove pressure gauge and replace the pressure test point screw.

8. Relight the appliance and check for gas soundness.

5.2 Fitting the Outer Case

1. Push in and turn the control knob back to the OFF position.

2. Remove the knob from the appliance by gently pulling the knob forward (Fig. 10).

3. Fit the outer case by locating the slots in the outer case rear strip onto the four mounting lugs on the wall brackets (Fig. 12).

4. Replace the control knob (Fig. 12).

5.3 Instructing the User

1. Explain how to ignite the appliance and alter the heat settings.

2. Show the position of the external gas service cock.

3. Instruct the user that the bottom and top of the case must never be obstructed in any way and emphasise that clothes etc must never be hung over the appliance to dry as this will cause overheating and possible damage.

4. Hand over the User's and Installation and Servicing Instructions and recommend that for reasons of safety and economy the appliance should be serviced annually by a competent person.

6.0 Annual Servicing – Page 12

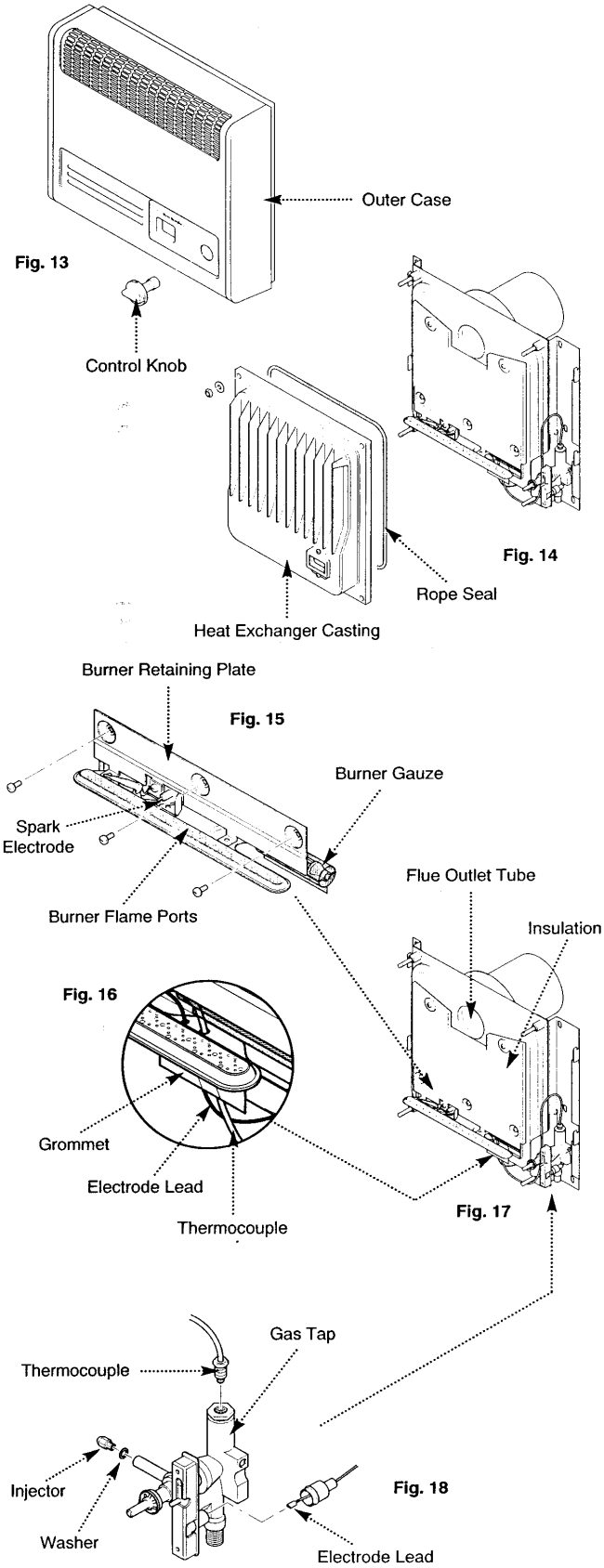

6.1 Servicing the Appliance

1. For reasons of safety and economy the appliance should be serviced annually
2. Before servicing please read Section 1.3 Important Information.
3. Turn off the gas supply and ensure that the appliance is cold.
4. Remove the control knob by pulling forward, then remove the case by easing upwards and forwards until it is clear of its retaining lugs (Fig. 13).
5. Undo the heat exchanger retaining nuts and washers (Fig. 14) and draw the casting forwards off the locating studs.

6. Remove the three screws holding the burner retaining plate to the airbox and undo the thermocouple nut from the gas tap (Fig. 15 & 18).

7. Ease the thermocouple and electrode lead from the rubber grommet (Fig. 16).
8. Disengage the burner from the injector and pull the electrode lead off the spark electrode (Fig. 15).

9. Check that the insulation is undamaged. Replace if necessary. **(8S only - Check that the aluminium foil is undamaged. Replace if necessary)** (Fig. 17).

10. Remove and clean the injector and sealing washer. The injector must not be cleaned with a needle or wire (Fig. 18). If the sealing washer is damaged it must be replaced.

11. Check that the flue outlet tube is clear (Fig. 17).

12. Brush away any dirt from the heat exchanger casting. If necessary clean the viewing window.

13. With a light brush carefully remove deposits from the spark electrode, burner flame ports and the burner gauze (Fig. 15).

14. Replace the rope seal in the heat exchanger casting if it is damaged in any way (Fig. 14). Also examine the thermocouple and replace if necessary.

15. Re-assemble the injector, washer and burner assembly in reverse order of dismantling. Ensure that the spark gap is correct ie. 3.5mm ± 0.5mm. Check that the burner is horizontal and correctly positioned on the injector with the gauze covering the primary aeration hole.

16. Check the gas pressure at the test point on the gas control tap. If the pressure is not within the tolerance, (see Section 2.0 Technical Data) the gas supply to the unit needs to be investigated.

17. Check that the burner ignition is satisfactory. Ensure that the thermocouple/electrode lead grommet is correctly positioned and re-fit the heat exchanger casting.

18. Check for gas soundness.

19. Fit the case and control knob and re-check that the ignition is satisfactory.

7.0 Changing Components – Page 13

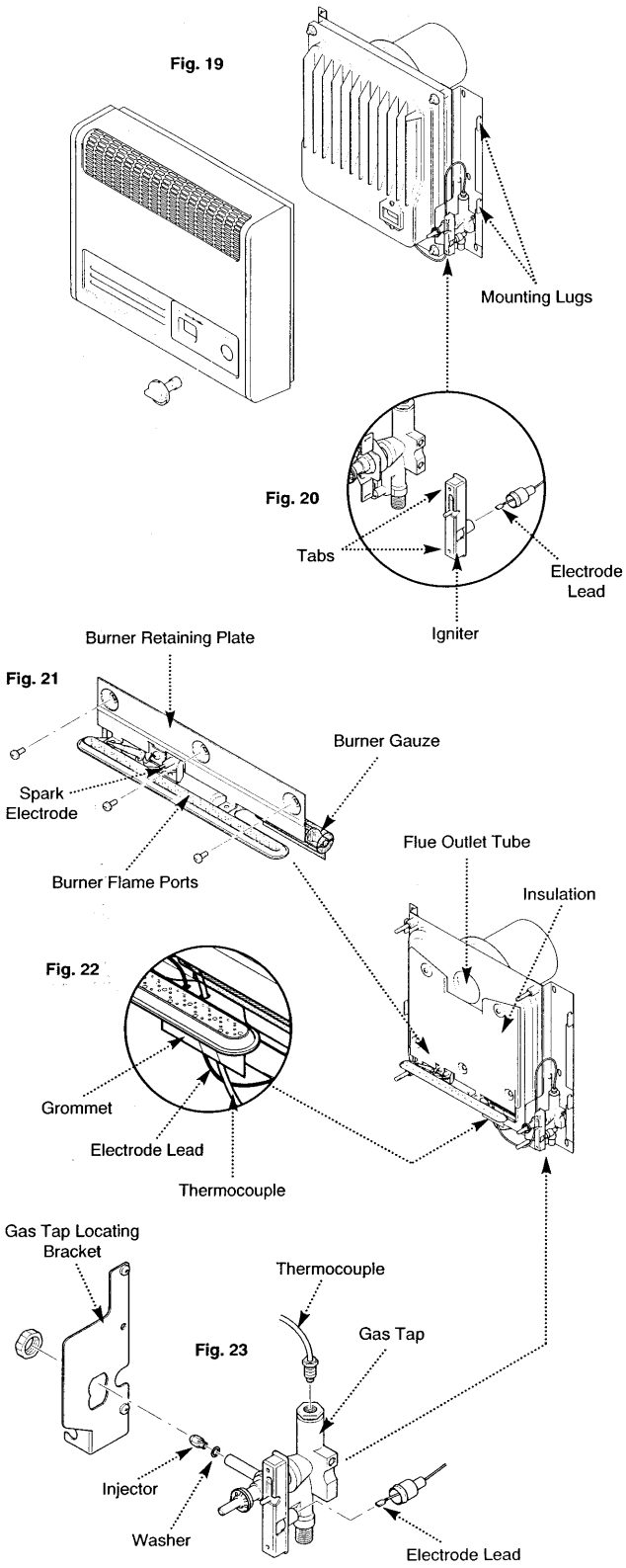

7.1 Changing Components

1. Before changing any components please read Section 1.3 Important Information.

2. Turn off the gas supply and ensure that the appliance is cold.

3.Remove the control knob by pulling forward, then remove the case by easing upwards and forwards until it is clear of its retaining lugs (Fig. 19).

4. After changing any components re-commission the appliance

7.2 Piezo Unit (Fig. 20).

1. Pull off the spark lead at the rear of the igniter.

2. Straighten the tabs securing the piezo unit to the tap retaining plate and remove.

3. Fit the new piezo unit and twist the tabs slightly to secure.

4. Replace all components in the reverse order of dismantling.

7.3 Gas Control Tap

1. Undo the heat exchanger retaining nuts and washers and draw the casting forwards off the locating studs.

2. Remove the three screws holding the burner retaining plate to the airbox and undo the thermocouple nut from the gas tap (Fig. 21 & 23).

3. Ease the thermocouple and electrode leads from the rubber grommet (Fig. 22).

4. Disengage the burner from the injector and pull the electrode lead off the spark electrode (Fig. 21).

5. Pull off the spark electrode lead at the rear of the igniter (Fig. 23).

6. Remove the supply pipe from the gas tap.

7. Undo the nut holding the gas tap to its retaining bracket, and disengage the tap from the bracket (Fig. 23).

8. Remove the injector and sealing washer. If the washer is damaged it must be replaced.

9. On re-assembly ensure that the airbox sealing grommet is correctly positioned and check for gas soundness.

7.0 Changing Components – Page 14

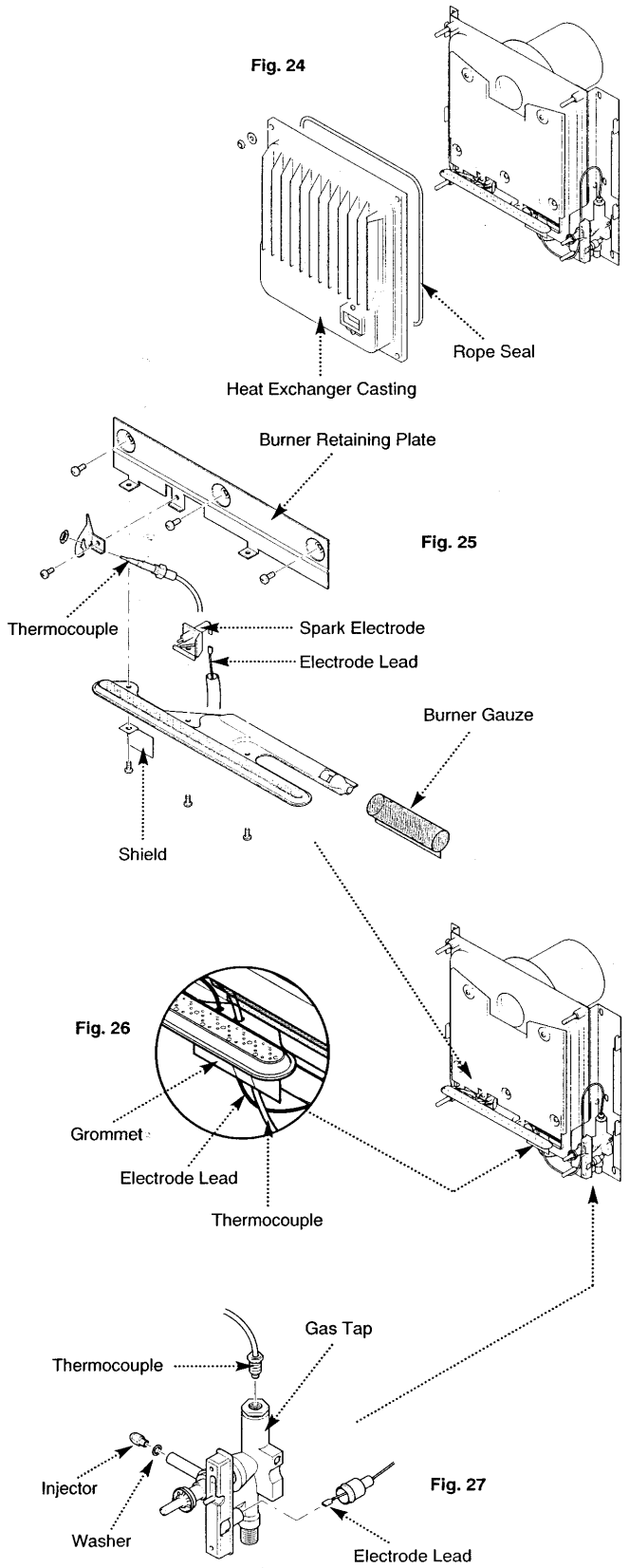

7.4 Burner

1. Undo the heat exchanger retaining nuts and washers and draw the casting forwards off the locating studs (Fig. 24).

2. Remove the three screws holding the burner retaining plate to the airbox, also remove the insulation and undo the thermocouple nut from the gas tap (Fig. 25 & 27).

3. Ease the thermocouple and electrode lead from the rubber grommet (Fig. 26).

4. Disengage the burner from the injector and pull the electrode lead off the spark electrode (Fig. 25).

5. Remove the intake gauze from the burner inlet and undo the screws securing the burner to its' retaining plate, noting the position of the shield at the left hand side (Fig. 25).

6. Undo the screw securing the spark electrode to the burner. Fit the electrode to the new burner (Fig. 25).

7. Fit the intake gauze to the burner inlet ensuring that it covers the primary aeration hole (Fig. 25).

8. Reassemble in reverse order of dismantling.

7.5 Injector

1. Remove the burner as described in sections 7.4.1 to 7.4.4.

2. Undo the injector and sealing washer, retaining the washer for use with the new injector. If the washer is damaged it must be replaced.(Fig. 27).

3. Reassemble in reverse order of dismantling.

7.6 Thermocouple

1. Remove the burner as described in sections 7.4.1 to 7.4.4.

2. Undo the nut retaining the thermocouple tip to the burner bracket and withdraw the thermocouple (Fig. 25).

3. Bend the new thermocouple in a similar manner to the one removed. Avoid any sharp bends.

4. On reassembly ensure that the airbox sealing grommet is correctly positioned.

8.0 Fault Finding – Page 15

Ensure all installation criteria have been satisfied before performing Fault Finding (e.g. flue terminal position).

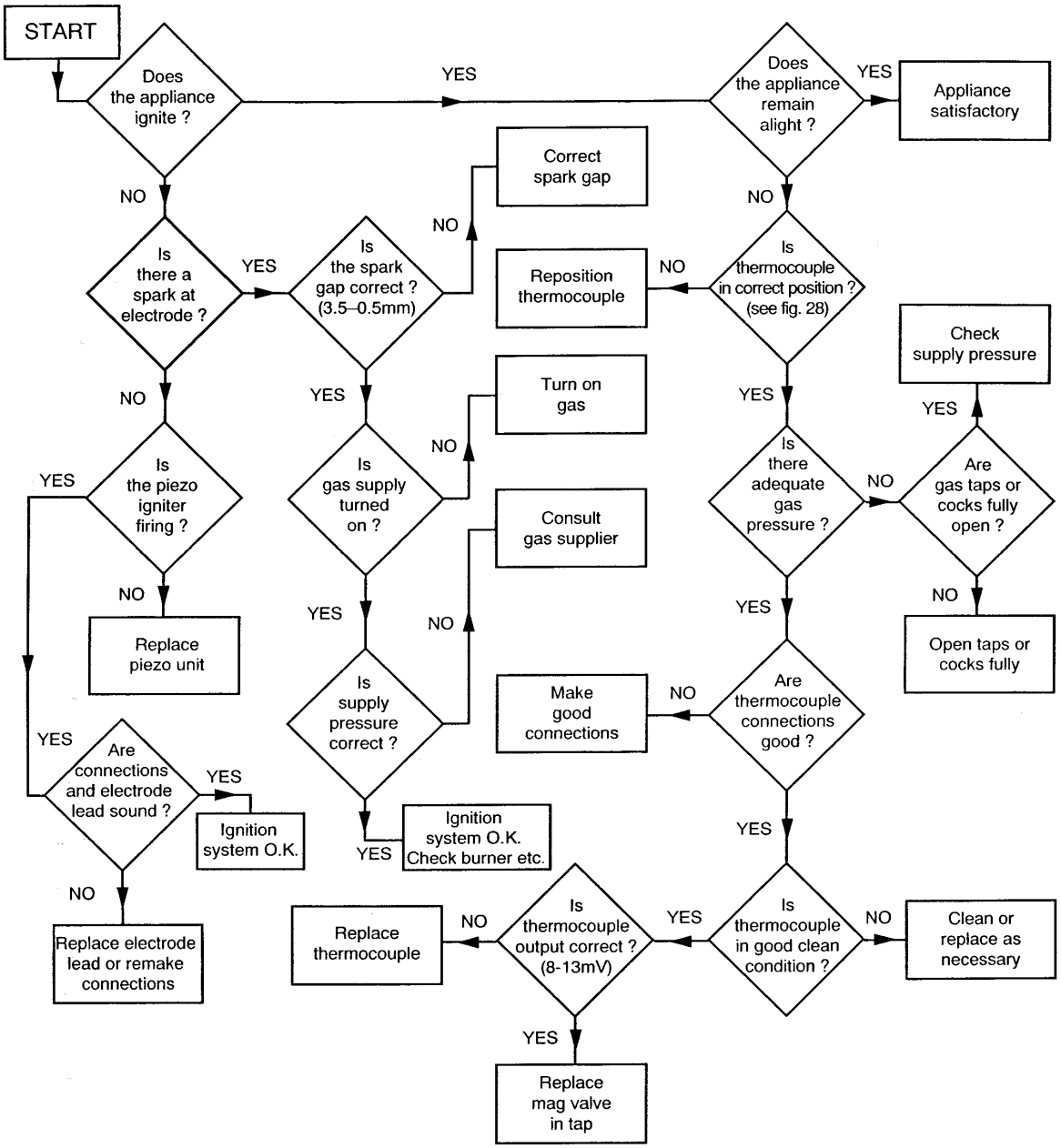

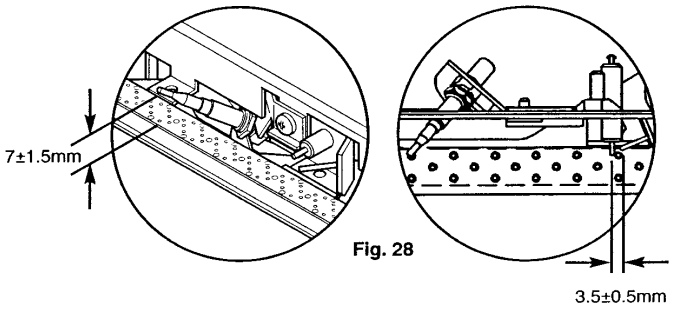

Fig. 28

9.0 Short parts list – page 16

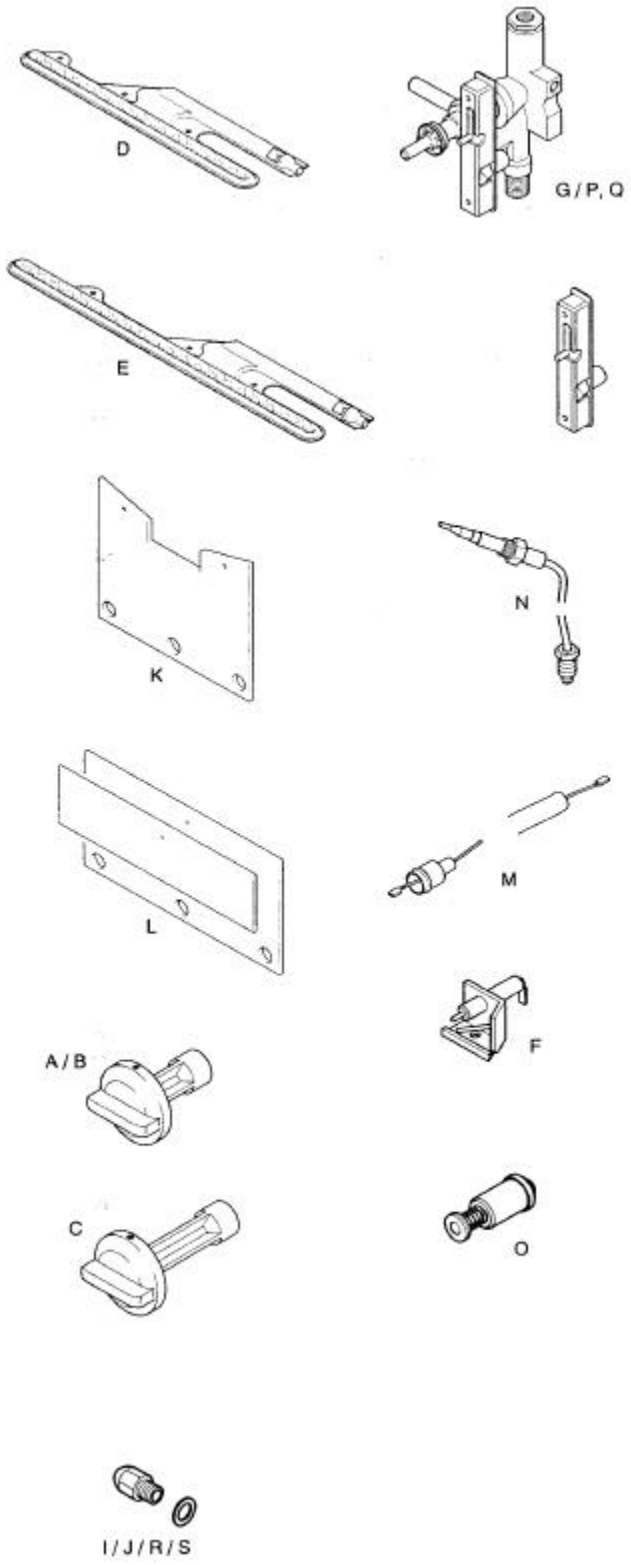

Key No.	G.C. No.	Description	Manufacturers Part No.
A	205890	Knob Control (5)	234632
B	205887	Knob Control (5S)	234637
C	205894	Knob Control (8S)	234643
D	205837	Burner (515S)	224041
E	205864	Burner (8S)	223963
F	205873	Electrode Spark	223940
G	E01357	Igniter/GasTap (5/5S)	243875
	E01358	Igniter/Gas Tap (8S)	243873
H	393734	Piezo Igniter/Generator	042941
I	381941	Injector (5/5S)	224047
J	381942	Injector (8S)	224104
K	205844	Insulation (5/5S)	224048
L	E01359	Insulation (8S)	243896
M	155654	Lead Electrode	043043
N	E01360	Thermocouple	243870
0	384248	Tap Mag Unit	082462
For	**LPG**	**Models only**	
P	E01361	Igniter/GasTap	243867
Q	E01362	Igniter/Gas Tap	243872
R	E01363	Injector (5/5S)	243867
S	E01364	Injector (8S)	243867

Click here for Helplines