Please leave these Instructions with the User.

Baxi Ebony Super

Gas Fire

Installation and Servicing Instructions

Baxi Ebony Super - **G.C.N°** 32 077 37

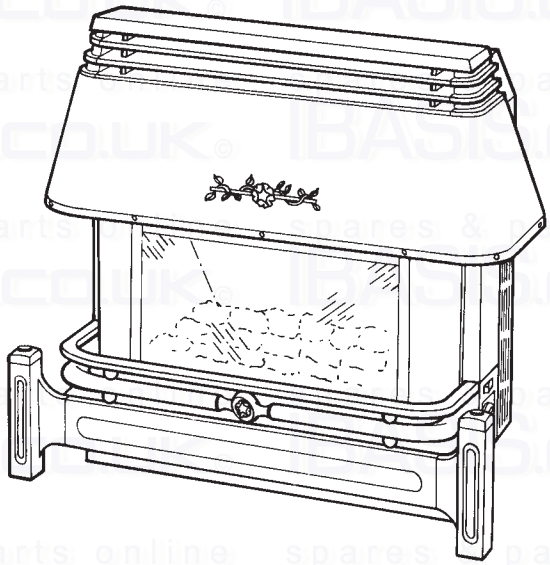

BAXI

spares & parts online IBASIS.CO.UK

Installation Instructions

INTRODUCTION

The Baxi Ebony Super is a hearth or wall mounted gas fired room heater with a flame and coal effect. Input at maximum setting is 5.42kW (18,500 Btu/h) corresponding to a net output of 3.47kW (11840 Btu/h) approx. The fire is available for use with Gas Type G20 (Natural Gas) at 20mbar. The fire is controlled by a control knob positioned on the right hand side of the case. Ignition is by a piezo spark to the burner.

The control knob has six positions giving a choice of four output rates:-

NATURAL GAS			PROPANE		
Position ●	-	OFF.	Position 2	-	Medium
Position ★🔥	-	Pilot.	Position 3	-	Medium High.
Position 1	-	Low.	Position 4	-	High.

The outer case has two concealed lamps to illuminate the artificial coal bed. This light effect is operated by a switch below the control knob. It may be used with or without the gas fire.

NOTICE

Discolouration of Wall Surfaces

Most heating appliances generate warm air convection currents and transfer heat to any wall surface against which they are situated.

Some soft furnishings (such as blown vinyl wallpapers) may not be suitable for use where they are subjected to temperatures above normal room levels and the manufacturer's advice should be sought before using this type of wall covering adjacent to any heating appliance.

The likelihood of wall staining from convected air currents will be increased in environments where high levels of cigarette smoke or other contaminants exist.

GENERAL

The installation must be carried out by a CORGI Registered Installer or other competent person and be in accordance with the relevant requirements of the GAS SAFETY (Installation and Use) REGULATIONS (as amended), the BUILDING REGULATIONS (Scotland) (Consolidation), the LOCAL BUILDING REGULATIONS and the CURRENT I.E.E. WIRING REGULATIONS. It should also be in accordance with the relevant BRITISH STANDARD CODES OF PRACTICE.

IMPORTANT INFORMATION

This product contains Refractory Ceramic Fibres (R.C.F.) which are man-made vitreous silicate fibres. Excessive exposure to these materials may cause temporary irritation to eyes, skin and respiratory tract. Care must be taken when handling these articles to ensure the release of dust or fibres is kept to a minimum.

To ensure that the release of fibres from these articles is kept to a minimum, during installation and servicing it is recommended that a H.E.P.A. filtered vacuum is used to remove any dust, soot or other debris accumulated in and around the appliance. This should be performed before and after working on the installation.

It is recommended that any replaced item(s) are not broken up but sealed within heavy duty polythene bags and clearly labelled “R.C.F. waste”. This is not classified as “hazardous waste” and may be disposed of at a tipping site licensed for the disposal of industrial waste.

Protective clothing is not required when handling these articles but it is recommended that gloves are worn and the normal hygiene rules of not smoking, eating or drinking in the work area are followed and always wash hands before eating or drinking.

SITE REQUIREMENTS

(a) **Fireplace or surround:** The fireplace or surround must be of non-combustible material and have a flat vertical area and an opening size to the dimension shown (Fig. 2). A shelf may be fitted above the fire provided that it does not exceed 150mm (6in deep) and is at least 100mm (4in) above the top of the fire. A clearance of 75mm (3in) is required at each side of the fire for access during servicing.

(b) **Fireplace opening:** At the height of the flue outlet the fireplace should have a minimum dimension of 100mm (4in) from the front face of the opening to the fireplace back brick (Fig. 3). There must be a minimum height of 250mm (10in) from the bottom of the catchment space to the base of the the flue spigot.

(c) **Hearth:** If the fire is to be hearth mounted the hearth must be of non-combustible materials, at least 13mm ($^1/_2$in) thick and measuring at least 326mm (12$^{13}/_{16}$in) deep and 750mm (29$^9/_{16}$in) wide (with the fireplace opening central). The top surface of the hearth should preferably be 50mm (2in) above the floor level. The floor behind the fire opening in the area of the closure plate rectangular cutout must be no higher than the finished hearth level. The fire must not be fitted directly on to a combustible floor or carpet.

(d) **Wall Fixing:** The fire may be fitted on to a suitable non-combustible wall so that the bottom of the rear legs is not less than 100mm (4in) above the finished floor level (Fig. 4).

FLUE (BS 5440: Part 1)

(a) **Existing chimneys:** A chimney which has previously been used to burn solid fuel MUST be swept before beginning the installation and any restrictions such as dampers or register plates must be removed. The chimney must be at least 310cm (10ft) in height and also meet the following requirements:

(i) It must NOT be cracked.
(ii) It must serve only one room.
(iii) It must not communicate with any void, space or any room other than that in which the fire is situated.
(iv) It must NOT be blocked by paper, rubble etc.
(v) It must have a positive updraught.
(vi) The cross sectional area of the flue must not be less than 120cm^2 (19in^2).

If there is no positive updraught DO NOT FIT THE FIRE and seek expert advice. Positive updraught can be detected by the use of a lighted match or smoke match (see relevant paragraph under INSTALLATION). Any underdraught vent or additional air supply openings that enter the fireplace must be completely sealed off.

(b) **Pre-cast flue:** The fire is suitable for fitting into properly designed and constructed pre-cast flues complying with the requirements of BS 1289 of at least 310cm (10ft) in height and having a flue way of at least 197mm x 67mm (7$^3/_4$in x 2$^5/_8$in) or equivalent cross sectional area.

NOTE: It must be ensured that any mortar between the blocks is not extruded into the flueway and that if raking blocks are used they must be fitted according to the manufacturer's instructions.

APPLIANCE DETAILS

Dimensions	Projection in room
Height	706mm ($27^{13}/_{16}$in)
Width	750mm ($29^{1}/_{2}$in)
Depth	326mm ($12^{13}/_{16}$in)
Input	High - 5.42kW (18,500 Btu/h)
	Low - 2.10kW (7,200Btu/h)
Output	High - 3.47kW (11,840 Btu/h)
Setting pressure (Cold)	14.1mbar ± 1.0mbar
	5.6in w.g. ± 0.4in w.g.
Gas	Natural Gas
Electrical (Main input)	230 volts ~ 50 Hz - 3A - 120W
Thermocouple (Output)	9.4 to 13mV
Resistor	68 ohms
Burner	Aerated - Duplex
Pilot Ignition	Piezo Unit - Spark Gap 2.5mm - 4.0mm
Weight	40kg (88lbs)
Height from hearth to top of flue spigot	489mm ($19^{1}/_{4}$in)
Tap	Duplex with rotary piezo and flame failure device operated by Oxy-pilot
Burner Injectors	230

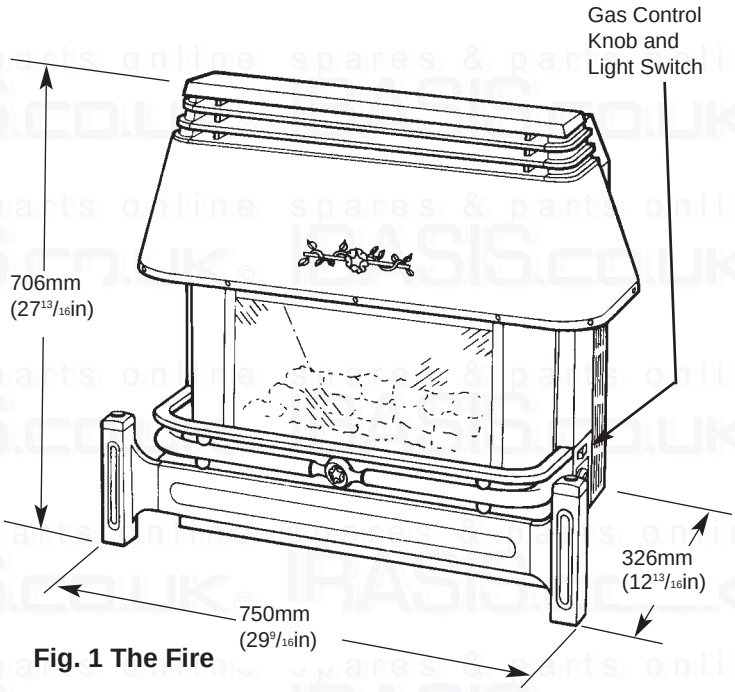

Fig. 1 The Fire

B.S. CODES OF PRACTICE

BS 6891	Gas Installation
BS 5871:Part 1	Installation of Gas Fires, Convectors and Fire/Back Boilers
BS 5440:Part 1	Flues
BS 5440:Part 2	Air Supply
BS 5258:Part 5	Fire Construction
BS 6332:Part 2	Fire Efficiency

ELECTRICAL CONNECTION

THIS APPLIANCE MUST BE EARTHED

ALL EXTERNAL WIRING BETWEEN THE APPLIANCE AND THE ELECTRICAL SUPPLY SHALL COMPLY WITH CURRENT I.E.E. REGULATIONS. The mains lead has the following specifications: 16/0.2mm - 3 core PVC covered - PVC insulated wire to BS 6500.

IMPORTANT: Mains lead wires:
Green and yellow - Earth
Blue - Neutral
Brown - Live

FOR THE MAINS PLUG USE A 3AMP FUSE. The appliance is supplied with approximately 3 metres of wire and a mains plug. A longer cable may be fitted as follows:

(a) Remove the socket and plug from the cable supplied.
(b) Re-assemble on the longer cable ensuring both socket and plug are wired correctly.

If a different mains plug is used from the one supplied with appliance proceed as follows:

The wire which is coloured green and yellow must be connected to the terminal in the plug which is marked by the letter 'E' or by the earth symbol ⏚ or coloured green or green and yellow. The wire which is coloured blue must be connected to the terminal which is marked with the letter 'N' or coloured black. The wire which is coloured brown must be connected to the terminal which is marked with the letter 'L' or coloured red.

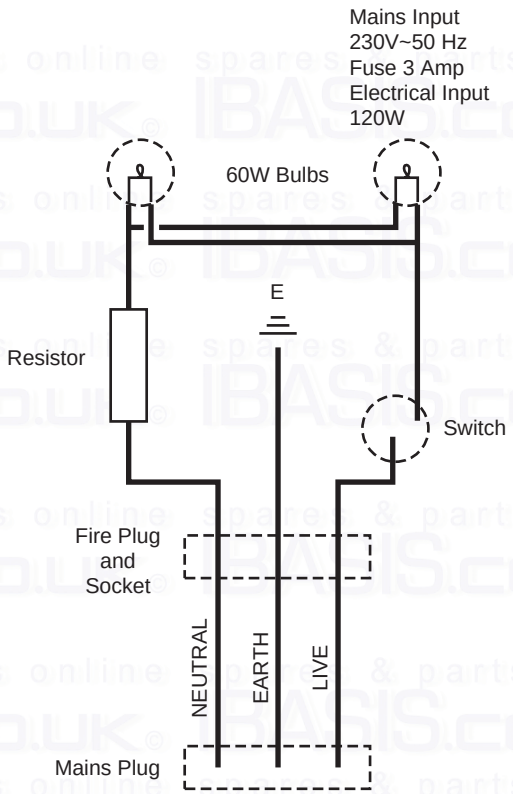

Installation

PREPARATION

(a) Where the closure plate is more than adequate in height to cover the fireplace opening, trim a minimum of 35mm ($1^3/_8$in) from the top of the closure plate to prevent the sealing tape being seen above the fire. Where the closure plate is inadequate to cover the fireplace opening completely or where it is required for the sake of appearance a NON-COMBUSTIBLE infill panel or surround may be used. The infill panel should be provided with a rectangular opening at least 508mm (20in) high by 305mm (12in) wide and must be securely fixed and sealed to the wall to prevent air leakage into the flue.

(b) Fit the closure plate centrally across the fire opening and seal all four edges but ensure that the ventilation hole at the bottom of the closure plate is not covered and that the floor behind the closure plate does not restrict the ventilation hole.

(c) Apply a lighted taper, match or smoke match to the flue spigot opening in the closure plate before fitting the fire. If there is a definite flow into the opening in the closure plate, proceed with the installation. If there is not a definite flow into the opening, pre-heat the chimney for a few minutes then re-check for the flue pull. If there is still no definite flow into the flue spigot opening in the closure plate the chimney may require attention. DO NOT FIT THE FIRE - SEEK EXPERT ADVICE.

HEARTH FIXING

Fireplace or Surround

(a) Fit the fire backing plate to the fire using the M5 x 8mm thread forming screws provided. The backing plate may be screwed to the wall for extra support if necessary (Fig. 6).

(b) Position the fire (minus the outer case) against the closure plate and determine the position of the gas connection.

(c) Adjust the feet to level the fire (Fig.7). Check that the fire is sufficiently stable.

WALL FIXING

(a) Fit the two wall mounting brackets using the four No. 8 x $^3/_8$in self tapping screws provided (Fig. 7).

(b) Fit the fire backing plate to the fire using the M5 x 8mm thread forming screws provided.(Fig. 6)

(c) Mark the position of the bottom two fixing screws then drill and plug the wall (Fig. 4).

(d) Fix two No. 8 x $1^1/_2$in screws into the wall leaving 3 - 4mm ($^1/_8$in - $^5/_{32}$in) clearance under the screw head then locate the fire onto the screws.

(e) Push the fire backwards until the fire backing plate touches the surround or finished wall face. Mark the position of the two lower securing holes in the fire backing plate (Fig. 6).

(f) Remove the fire then drill and plug the wall.

(g) Replace the fire then screw the fire back to the wall and tighten all four screws.

CONNECTING THE GAS SUPPLY

Rc$^1/_4$ ($^1/_4$in BSP internal taper).

NOTE: If a hole has to be cut in the closure plate for the gas supply pipe, seal the opening between the gas pipe and the closure plate, ensuring that the ventilation hole is kept clear.

(a) Make the gas connection to the union elbow.

(b) Fit the control knob and make sure that the tap is off. (Turn fully clockwise).

(c) Turn the gas on, check for gas soundness.

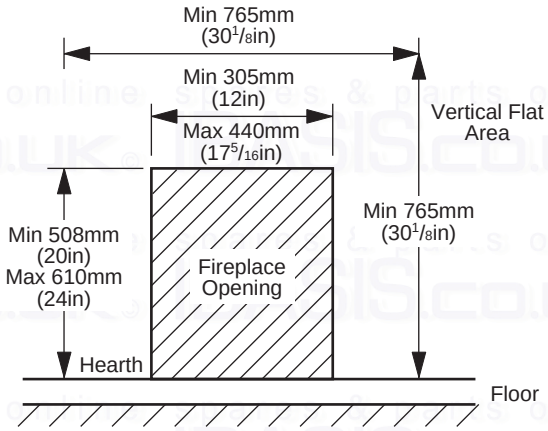

Fig. 2 Fireplace or Surround

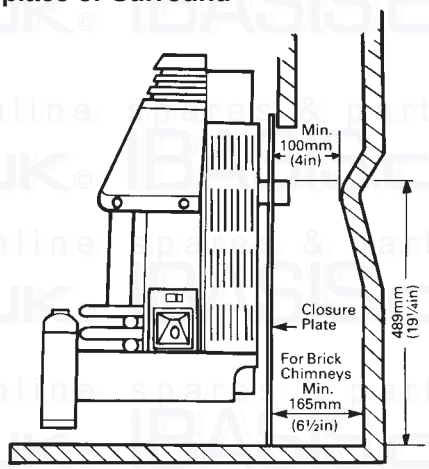

Fig. 3 Fireplace Opening

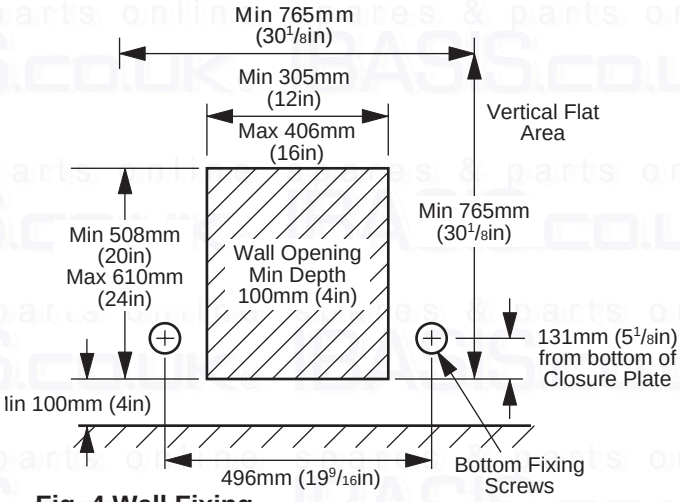

Fig. 4 Wall Fixing

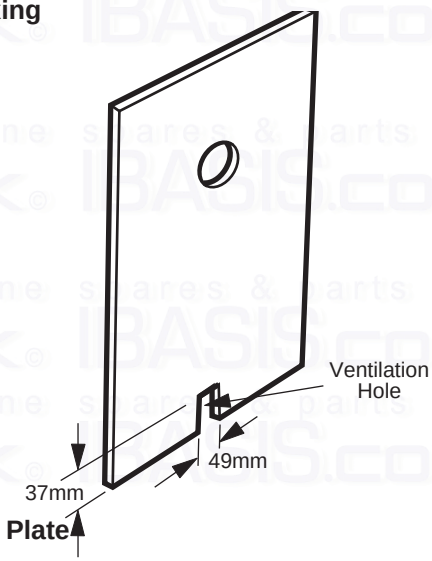

Fig. 5 Closure Plate

Commissioning the Fire

Check the gas pressure (Figs 7 and 11)

(a) Remove the packing securing the coal bed as follows:

(i) Slide the glass front panel retaining clamps sideways.
(ii) Lift the glass front panel bottom edge out of the locating channel and carefully remove the glass front panel.
(iii) Remove the packing securing the coal bed.
(iv) Carefully remove the coal bed and withdraw it from the plastic bag.
CAUTION: The coal bed is extremely fragile and must be handled accordingly. Gloves should be worn and any inhalation of the dust should be avoided. Keep the coals away from children at all times. Please read the Important Information Section on page 2.
(v) Replace the coal bed and glass front panel.

(b) Remove the pressure test point sealing screw from the control tap and connect a pressure gauge.

(c) **To light the fire burner:** Push in and turn the fire control knob anti-clockwise to the positive stop. The pilot which can be seen through the lower right hand gap between the coal should now light. If it fails to light turn the control knob to the 'OFF' position and repeat until lighting occurs. Continue to hold in the control knob for a further 15 seconds. Release slowly and the pilot should stay alight.

CAUTION: If the pilot does not light or stay alight or if the pilot flame goes out for any reason turn the control knob to the 'OFF' position and wait for 3 minutes before attempting to light the pilot again.

(d) Push in the control knob and turn fully anti-clockwise. Check that the ignition is satisfactory.

(e) Check the fire pressure with the control knob turned fully anti-clockwise. The pressure should be 14.1mbar ± 1.0mbar (5.6 in wg ± 0.4 in wg). No adjustment is provided on the fire. Turn the control knob to the 'OFF' (●) position. Remove the pressure gauge and refit the pressure test point sealing screw. Turn the fire on full again and check for gas soundness using a suitable leak detection fluid.

TEST FOR SPILLAGE

(a) Check that all four edges of the closure plate are sealed.
(b) After fitting the fire ensure that all doors and windows of the room are closed and they are not opened until the fire has been checked for clearance of products.
IMPORTANT NOTE: If there is an extractor or ceiling fan in the room or adjoining room then the spillage test must be performed with the fan turned on and any interconnecting doors between the fan and the appliance left open.
(c) Light the fire and leave on full rate for 5 minutes.
(d) The fire should be checked visually for the absence of spillage by holding a smoke match 50mm (2in) inside the draught diverter behind the fire ensuring that the smoke is drawn into the flue outlet (Fig.8). If there is any doubt repeat the test after a further 10 minutes. If spillage still persists the chimney may be faulty. The cause of the fault MUST be identified and corrected before leaving the fire installed. IF THE FAULT CANNOT BE CORRECTED, TURN OFF AND DISCONNECT THE GAS SUPPLY TO THE FIRE - SEEK EXPERT ADVICE.
(e) Remove the control knob.

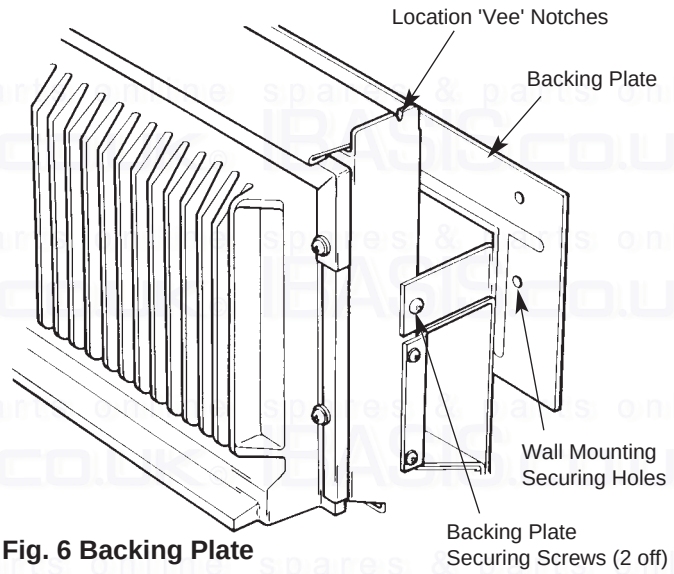

Fig. 6 Backing Plate

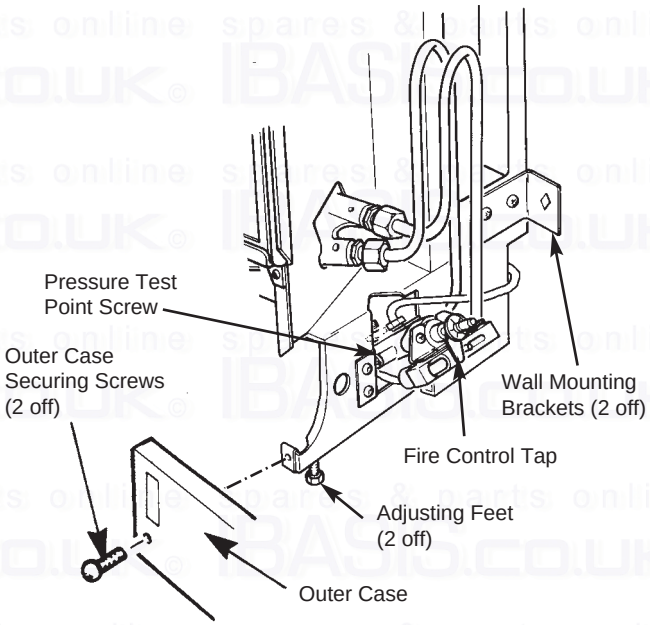

Fig. 7 Commission the Fire

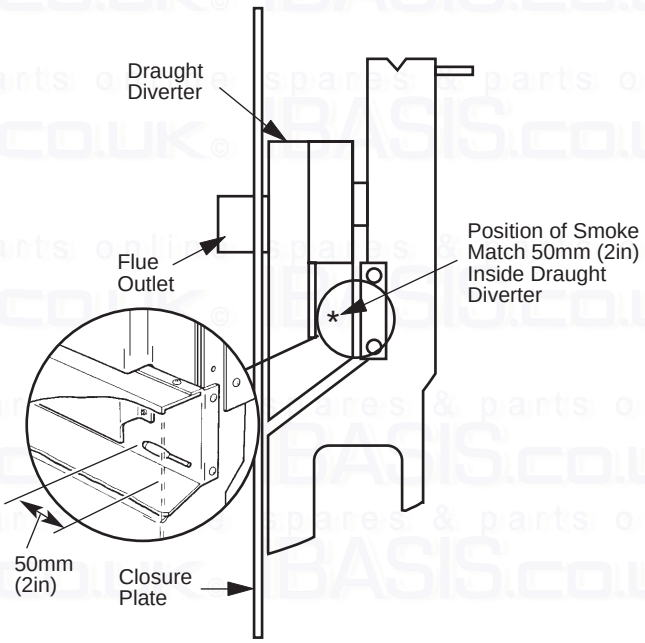

Fig. 8 Test for Spillage

Fit the Outer Case

(a) Fit the main electrical cable to the outer case. The cable can be routed to the left or right hand side of the case to suit the nearest adjacent electrical socket. Fit the cable in the pair of clips fixed on the outer case (2 each side). Use the 'P' clip in the pack, at the rear of the outer case (Fig. 9).

(b) Lift the outer case over the heat exchanger and locate the two 'vee' notches in the top of the case into the 'vee' notches at the top of the heat exchanger support legs (Fig. 6).

(c) Secure the outer case to the inner case using the two screws provided then locate the cover panel in the spring clips (Fig. 7).

(d) Fit the control knob and check the operation of the fire at all tap settings.

(e) Plug in the electrical supply, operate the switch below the control knob and check that the two 60W bulbs light, indicating that the circuit is live. In the event of an electrical fault after installation preliminary electrical system checks should be carried out for earth continuity, short circuits polarity and resistance to earth.

NOTE: For access to the lamps and glass front panel remove the reflector assembly complete by first lifting the assembly upwards and swinging its lower edge forward and downwards.

(f) Instruct the user in the use of the fire including the removal of the reflector assembly and the operation of the light effect. Stress the importance of regular servicing and hand over the user's instructions.

(g) Advise the user that any smells emitted from the appliance on initial lighting will quickly clear away with use.

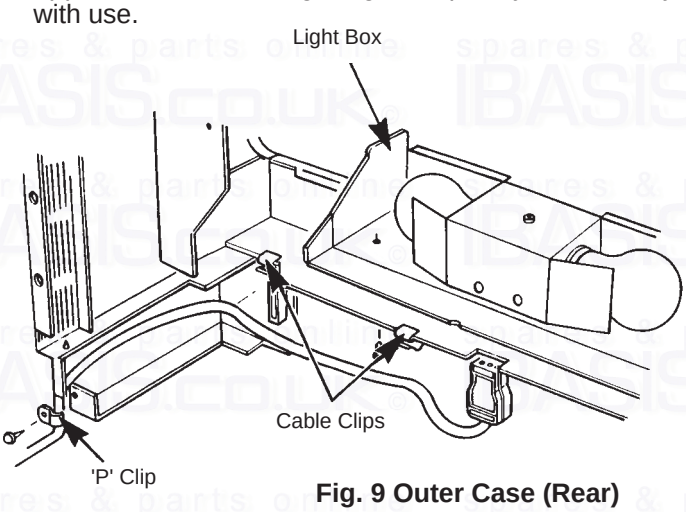

Fig. 9 Outer Case (Rear)

Servicing the Fire

Turn off the gas and withdraw the plug from the electrical supply before any servicing.

IMPORTANT

Always check for gas soundness before and after servicing the fire particularly gas carrying joints which may have been disturbed. At least once a year remove the fire and check behind the closure plate for any accumulation of rubble. Reseal the four edges of the closure plate and any opening between the closure plate and any rear entrance gas supply but ensure that the ventilation hole at the bottom of the closure plate is not covered. Before Servicing please read the Important Information Section on page 2.

IMPORTANT: It is possible that some soot may be deposited on the coals after use. This is acceptable proving it is not allowed to accumulate.

1. **Remove the outer case** (for access to all controls)
(a) Pull off the control knob.
(b) Remove the cover panel under the front of the fire by grasping it firmly by its side edges and pulling forwards.
(c) Remove the two case securing screws (Fig.7).
(d) Lift the case away from the heat exchanger.
2. **Remove the glass front panel** (Fig. 10)
(a) Ensure that the glass front panel is cold.
(b) Slide the glass front panel retaining clamps sideways.
(c) Lift the glass front panel bottom edge out of the locating channel and carefully remove the glass front panel.
3. **Remove the coal bed** (Fig. 10)
CAUTION: The coal bed is extremely fragile and must be handled accordingly. Gloves should be worn and any inhalation of the dust should be avoided. Keep the coals away from children at all times. Please read the Important Information Section on page 2.
(a) Lift the coal bed away from the locating pins.
4. **Remove the burner** (Figs. 10, 11 and 12)
(a) If fitted, remove the screw holding the pilot shield to the burner rail.
(b) Remove the screw holding the pilot assembly to it's bracket.
(c) Disconnect the compression nuts from the injectors.
(d) Remove the two screws securing the burner.
(e) Ease the pilot assembly forwards and slide the burner out above the glass locating channel.
(f) Using a soft brush remove all deposits from the top of the burner and burner ports.
(g) Remove the injectors from the end of the burner and clean or replace as necessary.

NOTE: During annual appliance servicing the pilot assembly should be inspected for damage to any of the component parts and any lint or debris should be carefully removed from the aeration hole.

5. **Replace the parts in the reverse order of dismantling.** Make sure that:
(a) The electrode sleeve is pulled up on the electrode and the electrode gap is correct (Fig. 12).
(b) The coal bed is correctly fitted over its locating pins.
(c) The glass front panel sealing rope is replaced if it is in any way damaged.
(d) The glass front panel is replaced if it is in any way damaged or cracked.

NOTE: This is heat resistant glass and must not be replaced by ordinary glass.

6. **Check the gas pressure.** Temporarily fit the control knob and light the fire. Check that ignition is satisfactory and the gas pressure is correct - see 'Commissioning the fire'.
7. **Test for spillage.** see 'Commissioning the fire'.
8. Refit the outer case, control knob, case securing screws, controls cover plate and plug in the electrical supply. Check the operation of the fire at all tap settings. Operate the switch below the control knob and check the operation of the lamps.

NOTE: If the pilot is persistantly extinguished the flue may be unsound and should be investigated immediately.

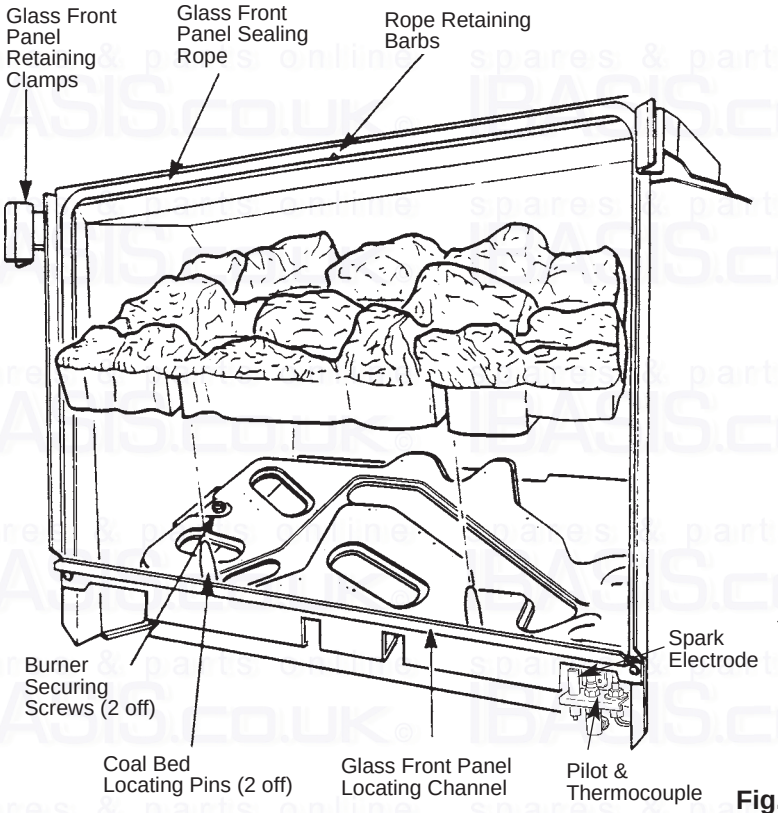

Fig. 10 Coal Bed

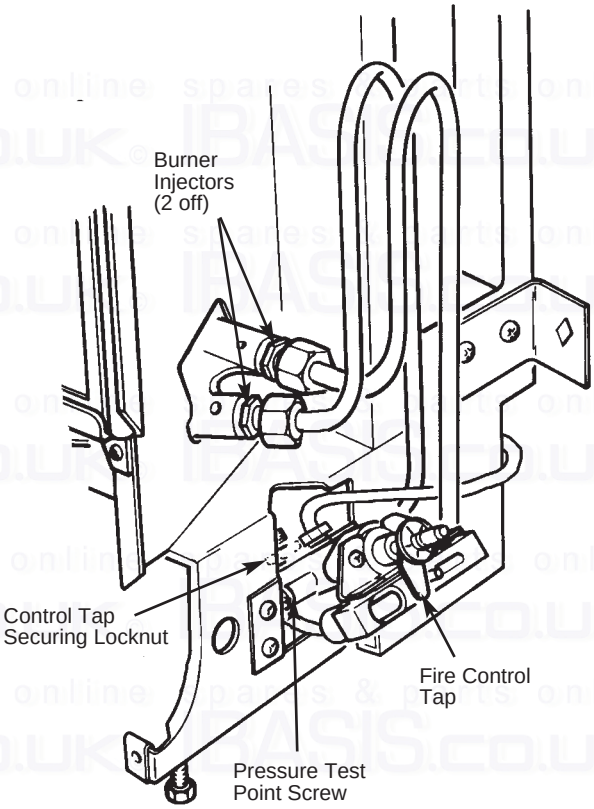

Fig. 11 The Controls

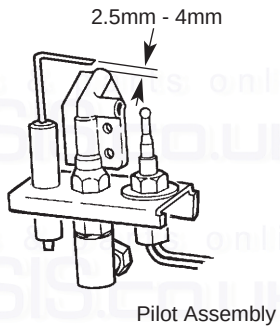

Fig. 12 Spark Gap

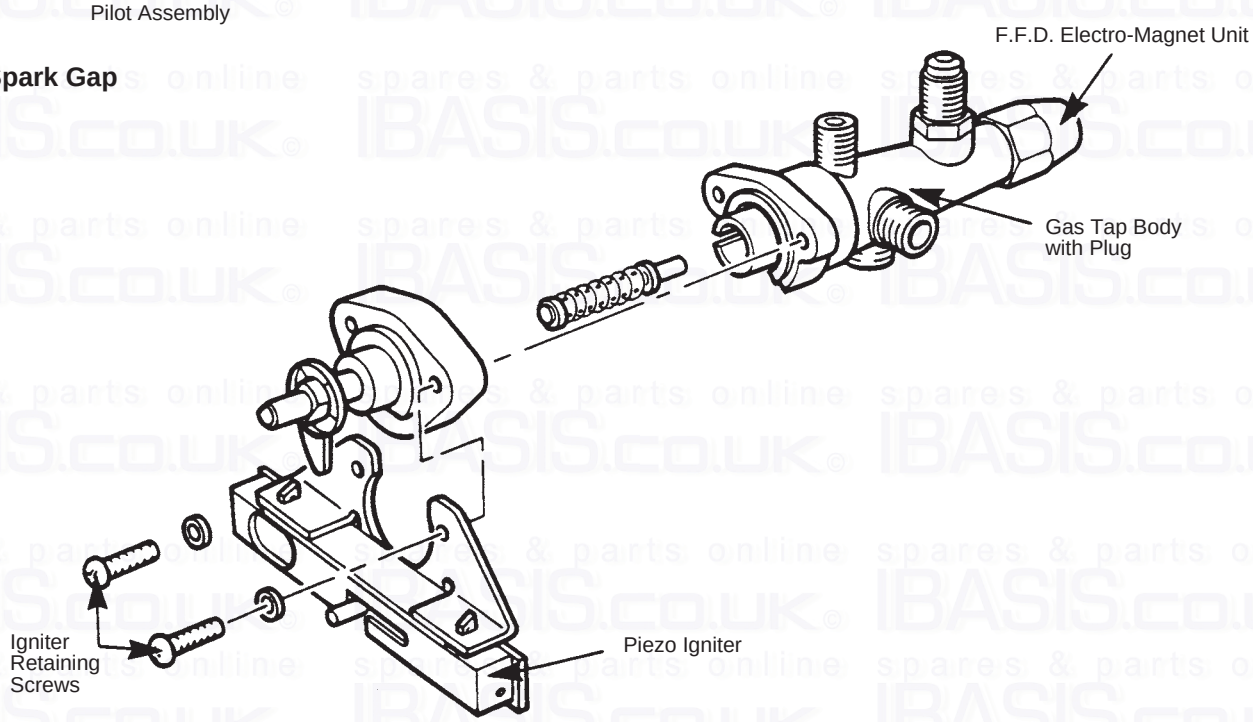

Fig. 13 Gas Control Tap & Flame Failure Device

Changing Components

Before changing any components please read the Important Information Section on page 2.

The following components can be removed as described below after first removing the outer case. Turn off the gas and withdraw the plug from the electrical supply before removing the outercase.

ENSURE THAT THE FIRE IS COLD

GAS CONTROL TAP (Flame Failure Device)

(a) **Greasing the tap plug** (Fig. 13). Pull off the plastic cap and then the spark electrode lead from the piezo unit and undo the two set screws and washers securing the niting plate to the tap body.

Remove the piezo unit complete with the gas tap spindle and spring. Now remove the plug and apply suitable grease sparingly, e.g. Kluber N322B. (Excessive grease may block the gasways). On re-assembling care must be taken to ensure that both the plug and spring are in place.

(b) **To exchange the component** (Fig. 11). (Disconnect the gas supply and remove the fire from the fireplace.) Pull off the plastic cap and disconnect the spark electrode lead from the piezo unit. Disconnect the four tubes at the gas tap. Disconnect the thermocouple from the gas tap. Remove the 3 screws securing the gas tap bracket to the inner case and remove the complete assembly. Remove the locknut holding the gas tap to the bracket and remove the gas tap.

On re-assembly ensure that the spark electrode lead is correctly fitted and that the plastic cap is pushed on the piezo unit. Ensure that the pilot filter supplied with the new tap is fitted.

GLASS FRONT PANEL (Fig . 10)

(a) Ensure that the glass front panel is cold.
(b) Slide the glass front panel retaining clamps sideways.
(c) Lift the glass front panel bottom edge out of the locating channel and carefully remove the glass front panel.

On re-assembly ensure that:

(a) The glass front panel sealing rope is replaced if it is in anyway damaged.
(b) The glass front panel is replaced if it is in anyway damaged or cracked.

NOTE: This is a heat resistant glass front and must not be replaced by ordinary glass.

COAL BED (Fig. 10)

Remove the glass front panel as described above. Remove the coal bed by lifting it carefully away from the locating pins.

CAUTION: The coal bed is extremely fragile and must be handled accordingly. Gloves should be worn and any inhalation of the dust should be avoided. Keep the coals away from children at all times. Please read the Important Information Section on page 2.

On re-assembly ensure that the coal bed is correctly located over the locating pins.

BURNER (Figs. 10, 11 and 12)

(a) Remove the glass front and coal bed as described above.
(b) If fitted, remove the screw holding the pilot shield to the burner rail.
(c) Remove the screw holding the pilot assembly to it's bracket.
(d) Disconnect the compression nuts from the injectors.
(e) Remove the two screws securing the burner.
(f) Ease the pilot assembly forwards and slide the burner out above the glass locating channel.
(g) Remove the injectors from the burner.

PILOT/THERMOCOUPLE/ELECTRODE ASSEMBLY (Fig. 12)

NOTE: The thermocouple cannot be changed as an individual component. The complete assembly must be changed in the event of one or other component failure(s).

(a) Disconnect the gas supply and remove the fire from the fireplace.
(b) Pull back the sleeve and disconnect the lead from the electrode.
(c) Undo the nut on the pilot feed pipe.
(d) Remove the screw holding the assembly to the bracket.
(e) Undo the thermocouple from the gas tap.
(f) Remove the assembly from the fire.
(g) On re-assembly, shape the thermocouple in a similar manner to the original.

ELECTRO MAGNETIC UNIT (Fig. 11 and 13)

(a) Remove the gas tap as explained in Gas Control Tap section (b).
(b) Remove the electro magnet retaining nut and withdraw the electro magnet unit.

PIEZO UNIT (Fig. 13)

(a) Pull off the plastic cap and disconnect the spark electrode lead from the piezo unit.
(b) Undo the tabs on the rear of the piezo unit and remove.
(c) Replace the piezo unit twisting the tabs to retain it firmly in position. Re-connect the spark electrode lead and re-fit the plastic cap.

RESISTOR

(a) Check that the mains lead is disconnected.
(b) Remove the screw securing the light bulb cover and lift upwards.
(c) Remove the clip securing the resistor to the cover and disconnect the 2 wires.
(d) Replace the Resistor and reassemble in reverse order.

LIGHT SWITCH

Pull off the two flag terminals from the switch noting their relative positions. Press together the retaining arms on the rear of the switch and remove from the bezel. Replace the switch and terminals.

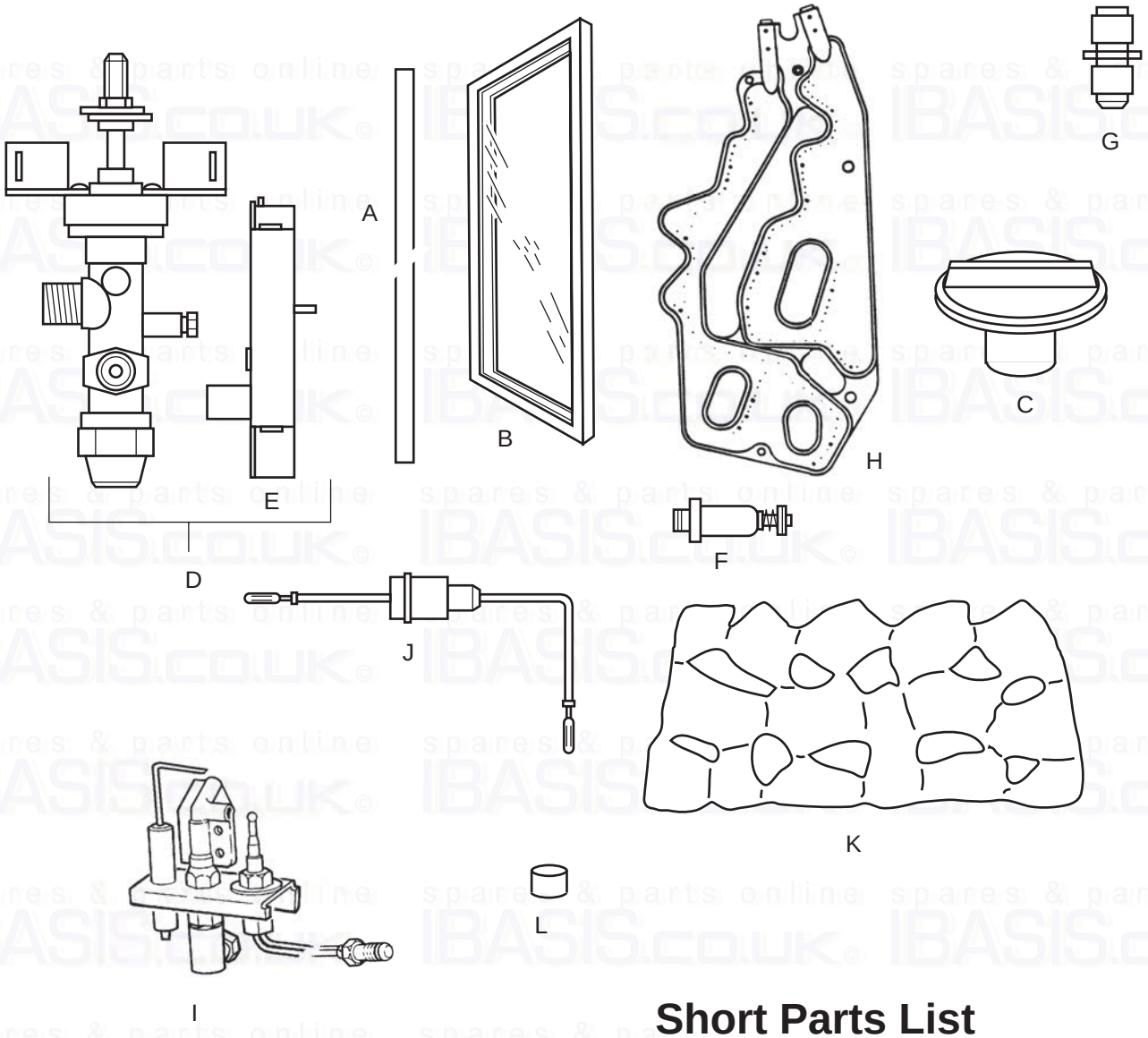

Short Parts List

BAXI EBONY SUPER
B.G.C. No 32 077 37

Key Nº	Description	G.C. Nº	Manufact'rs Part Nº
A	Seal - Glass Frame	155 747	043111
B	Glass & Frame Assembly	155 758	040955
C	Knob - Gas Tap Control	156 431	234551
D	Flame Failure Device/Gas Tap	E05 653	242512
E	Piezo Unit - Vernitron 66111	393 734	042941
F	Electro Magnet Unit	E01 617	239413
G	Injector F11 - Cat 18/230	381 879	092133
H	Burner - Aeromatic Baxi Special	155 949	043210
I	Oxy - pilot Assembly 350mm SIT OP 9402	378 914	236204
J	Lead - Electrode	378 915	236199
K	Coal Bed	156 429	235149
L	Filter - Pilot	205 723	082412

Fault Finding Chart

BAXI EBONY SUPER
Gas Type G20 (Natural Gas)

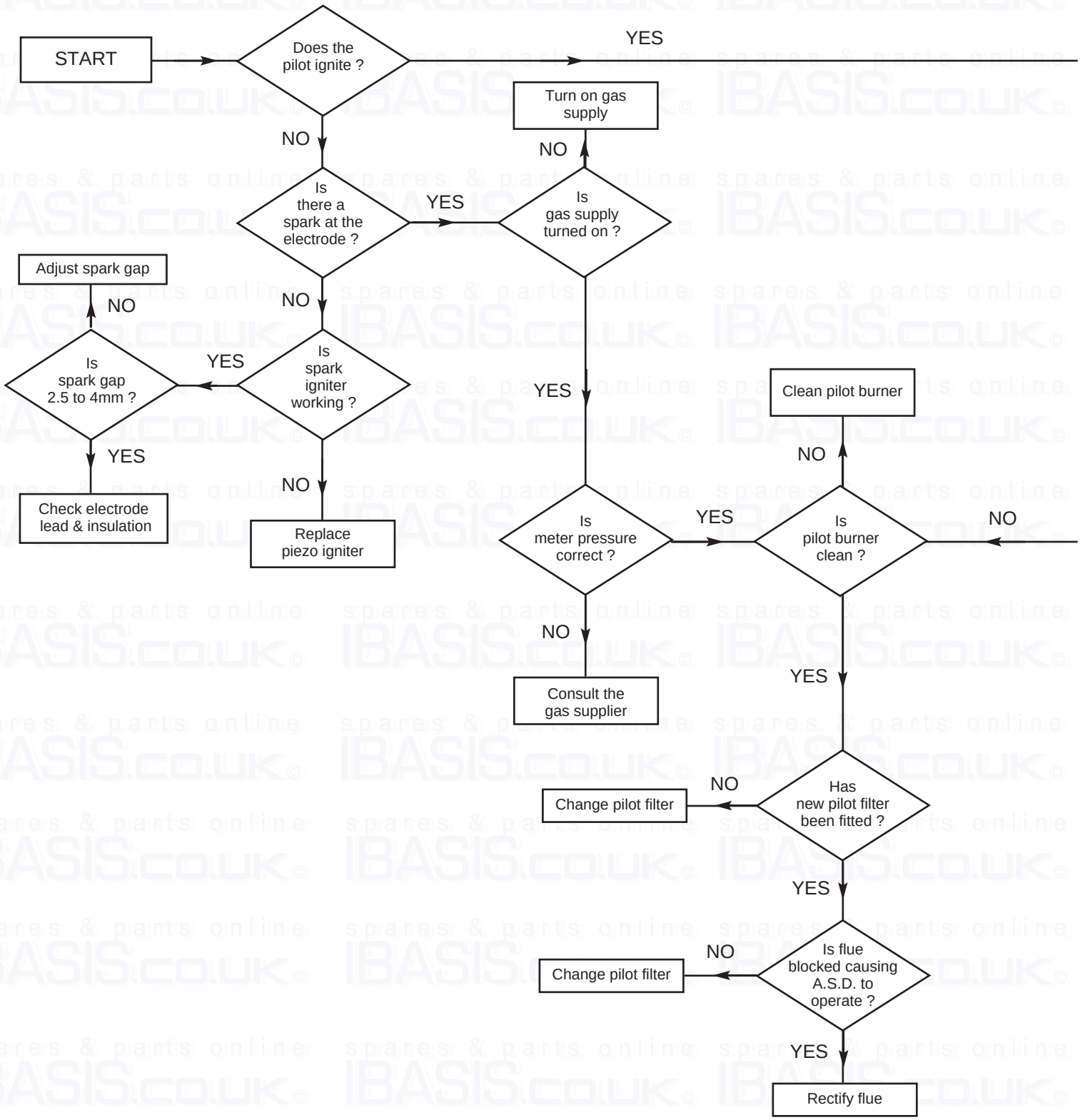

spares & parts online IBASIS.CO.UK

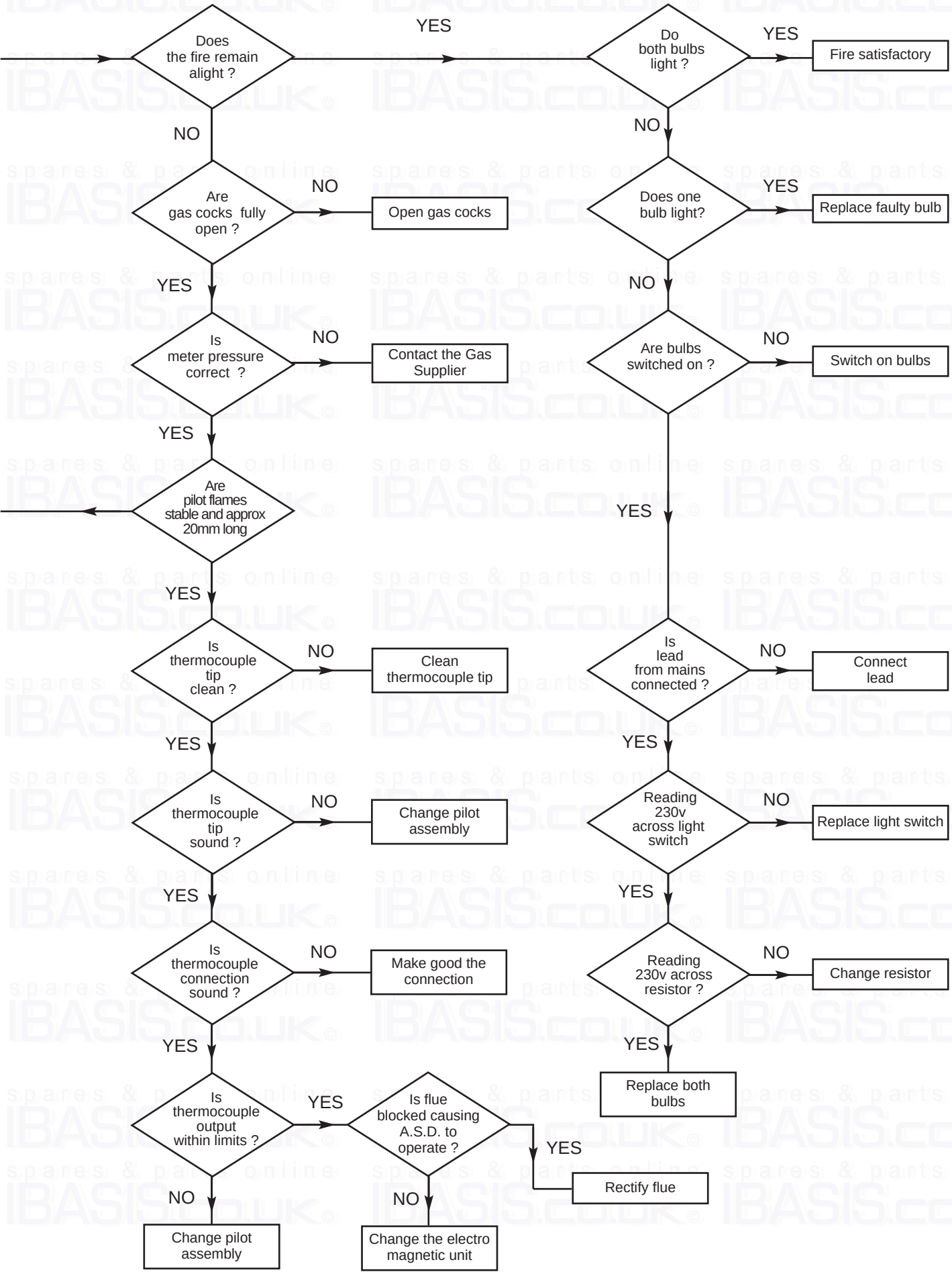
Does the fire remain alight ?
YES
Do both bulbs light ?
YES
Fire satisfactory
NO
Are gas cocks fully open ?
NO
Open gas cocks
YES
Is meter pressure correct ?
NO
Contact the Gas Supplier
YES
Are pilot flames stable and approx 20mm long
YES
Is thermocouple tip clean ?
NO
Clean thermocouple tip
YES
Is thermocouple tip sound ?
NO
Change pilot assembly
YES
Is thermocouple connection sound ?
NO
Make good the connection
YES
Is thermocouple output within limits ?
YES
Is flue blocked causing A.S.D. to operate ?
YES
Rectify flue
NO
Change pilot assembly
NO
Change the electro magnetic unit
NO
Does one bulb light?
YES
Replace faulty bulb
NO
Are bulbs switched on ?
NO
Switch on bulbs
YES
Is lead from mains connected ?
NO
Connect lead
YES
Reading 230v across light switch
NO
Replace light switch
YES
Reading 230v across resistor ?
NO
Change resistor
YES
Replace both bulbs

Comp Nº 236202 - Iss 5 - 10/00

spares & parts online IBASIS.CO.UK

After Sales Service
08706 096 096

Technical Enquiries
08706 049 049

BAXI

Baxi UK Limited
Brownedge Road
Bamber Bridge Preston
Lancashire
PR5 6SN
www.baxi.com