Please leave these instructions with the User

Baxi Genesis

Gas Fired Wall Mounted Combination Boiler
Natural Gas, Propane & Butane

Comp N°. 236463 - 10/96

Baxi Genesis 80 – G.C.N° 47 077 01
Baxi Genesis 96 – G.C.N° 47 077 02

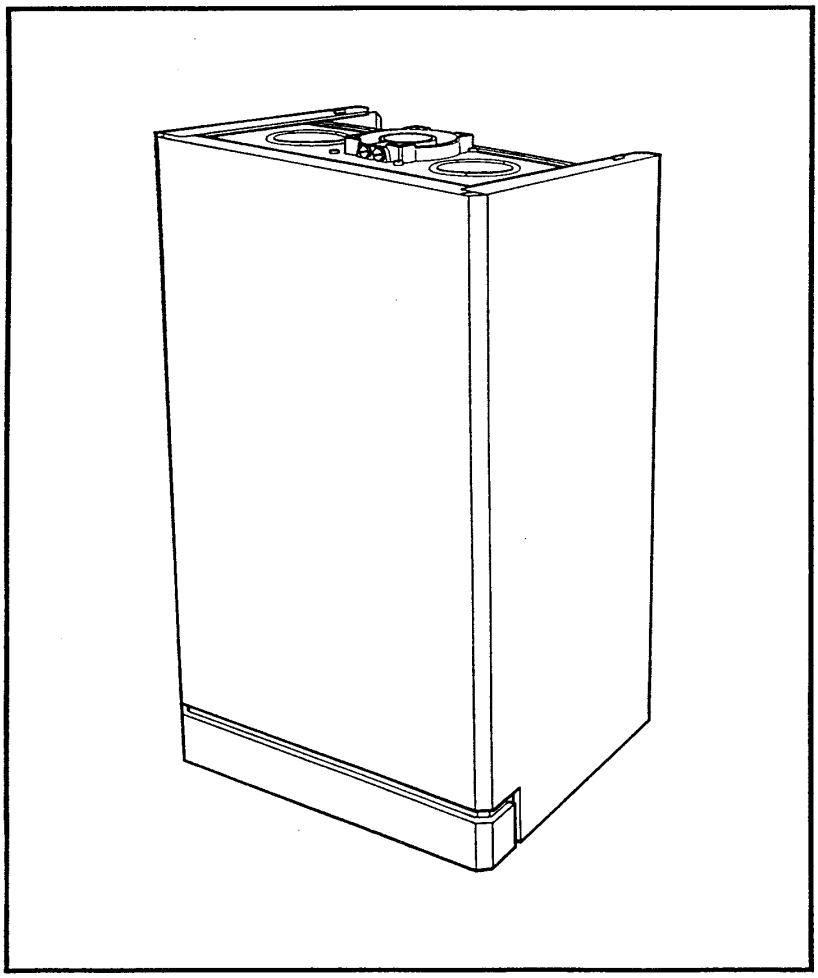

Installation and Servicing Instructions

BAXI HEATING

Baxi Heating Ltd is one of the leading manufacturers of domestic heating products in the U.K.

Our first priority is to give a high quality service to our customers. Quality is built into every Baxi product -products which fulfil the demands and needs of consumers, offering choice, efficiency and reliability.

To keep ahead of changing trends, we have made a commitment to develop new ideas using the latest technology - with the aim of continuing to make the products that customers want to buy.

Baxi is also the largest manufacturing partnership in the country. Everyone who works at the company has a commitment to quality because, as shareholders, we know that satisfied customers mean continued success.

We hope you get a satisfactory service from Baxi. If not, please let us know

Baxi is a BS-EN ISO 9002 Accredited Company

Contents – Page 3

Introduction PAGE 4
General Layout PAGE 5
Appliance Operation PAGE 6
Technical Data PAGE 7-8
General Dimensions & Fixings PAGE 9
System Details PAGE 10-12

Central Heating circuit
Bypass
System Control
System Filling & Pressurising
Pressure Vessel
Pressure Relief Valve
Domestic Hot Water Circuit
Showers
Hard Water Areas

Site Requirements PAGE 13-16

B.S. Codes of Practice
Clearances
Location
Ventilation of Compartments
Gas Supply
Electrical Supply
Flue
Terminal Guard

Installation PAGE 17-24

Initial Preparation
Flushing
Preparing the Boiler
Fitting the Boiler
Fitting the Flue
Making the Electrical Connections

Commissioning the Appliance PAGE 26
Servicing The Appliance PAGE 27
Changing Components PAGE 28-41

Pressure Switch
Fan
Gas Valve Solenoids
Domestic Hot Water Heat Exchanger
Heat Exchanger
Pump
PCB & Spark Generator
Thermistors
Safety Thermostat
Expansion Vessel
Pressure Relief Valve
Pressure Gauge
Flow Switches
Flame Sensing Probe
Spark Electrode
Injector Manifold
3-Way Valve
Water Filters
Automatic Air Vent
Flow Regulator

Fault Finding PAGE 42-50
Short Parts List PAGE 51

Introduction – Page 4

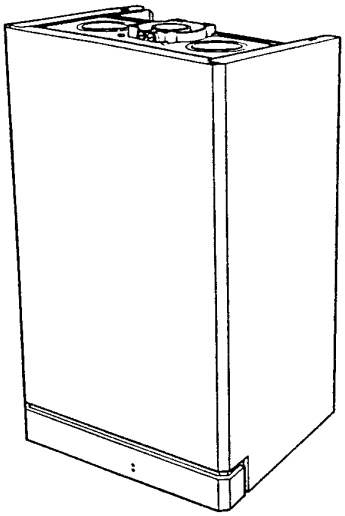

Description

The Baxi Genesis is a fully automatic gas fired wall mounted combination boiler. It is room sealed and fan assisted, and will serve central heating and mains fed domestic hot water.

Genesis 80
The boiler is preset to give a maximum output of 23.25 kW (79,347 Btu/hr) for both hot water and central heating modes.

Genesis 96
The boiler is preset to give a maximum output of 28.0 kW (95,555 Btu/hr) for both hot water and central heating modes.

It is designed for use on natural gas (G20). Using the conversion kit it can be used on LPG (Propane G31 or Butane G30).

The boiler is suitable for use only on fully pumped sealed heating systems. Priority is given to domestic hot water.

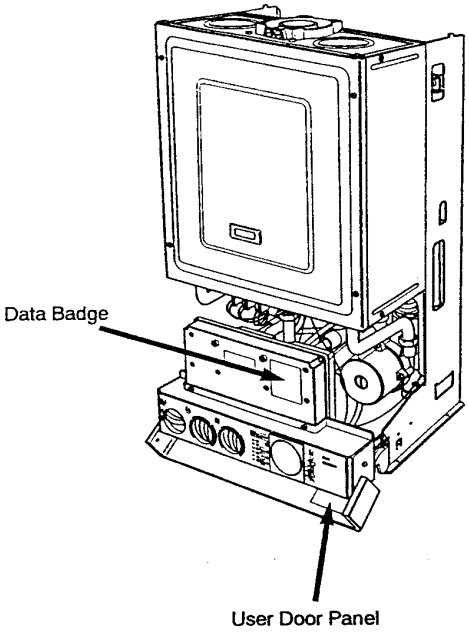

The appliance data badge is positioned on the electrical box behind the outer case.

A label on the user door panel gives details of the model, serial number and Gas Council number.

Optional Extras

KIT	PART No
Flue extension 1 M (Use two kits for 2M etc.)	236439
Flue Extension 0.25M	238605
Flue Extension 0.5M	238604
DHW Expansion Vessel Kit	238395
Wall liner/internal fixing	236441
Programmable room thermostat 24 hr.	236254
Programmable room thermostat 7 day	238326
Integral 7 day Electronic Timer Kit	238399
Integral 12 hr. AM/PM 8ectro-Mechanical Timer Kit	238398
80 LPG Conversion - Propane & Butane	235983
96 LPG Conversion - Propane & Butane	237474
Flue bend - 45º	236467
Flue bend - 90º	236466

Vertical Flue Equipment -
See Installer's Guide or Notes For Guidance

General Layout – Page 5

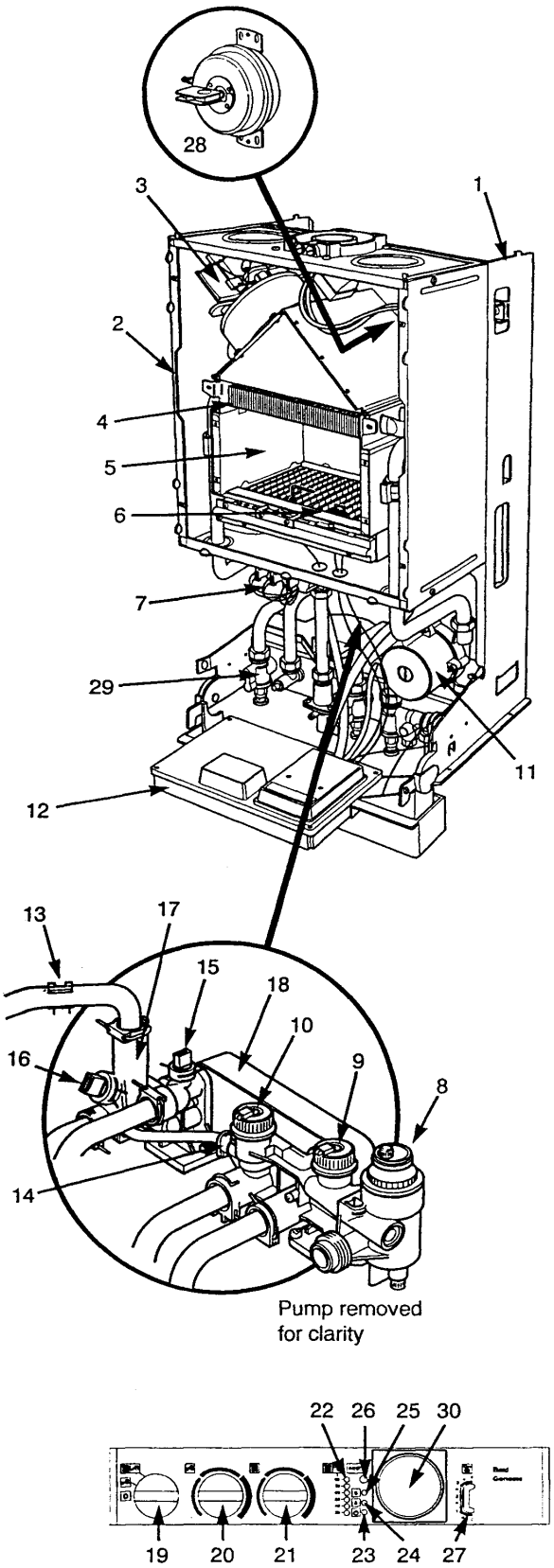

1	Chassis with Expansion Vessel
2	Combustion Box
3	Fan Assembly
4	Primary Heat Exchanger
5	Combustion Chamber
6	Burner Assembly and Electrodes
7	Gas Valve Assembly
8	Automatic Air Seperator and Vent
9	Flow Switch Heating Circuit
10	Flow Switch DHW Circuit
11	Circulation Pump
12	Electrical Box
13	Safety Thermostat
14	By-Pass Valve
15	DHW Thermostat Sensor
16	CH Thermostat Sensor
17	Three Way Valve
18	DHW Plate Heat Exchanger
19	Selector Switch On-Off
20	DHW Temperature Adjustment
21	Heating Temperature Adjustment
22	Heating Temperature Indicator
23	Green Light - Power On
24	Orange Light - Boiler On
25	Red Light - Flame Failure
26	Flame Failure Reset Button
27	Pressure Gauge
28	Pressure Switch
29	Isolating Valves
30	Optional Integral Timers

Appliance Operation – Page 6

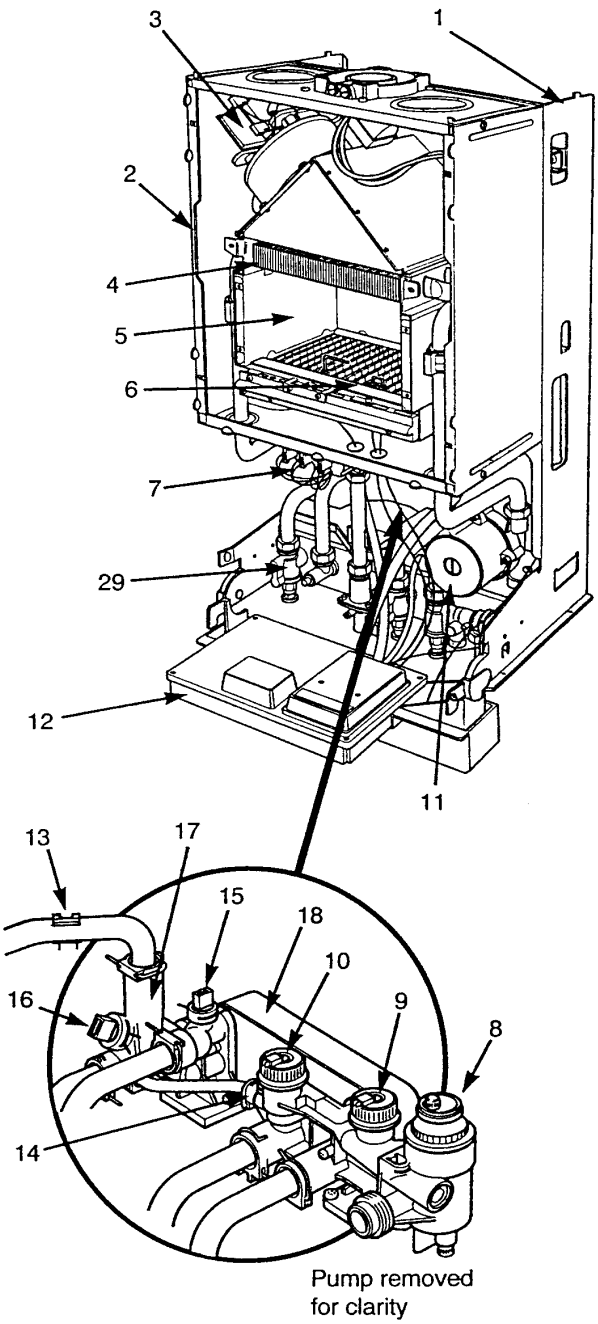

CENTRAL HEATING MODE

With a demand for heating the pump (11) circulates water through the primary circuit. At a flow rate of approximately 250 l/hr the central heating flow switch (9) operates, commencing the ignition sequence.

The main burner (6) ignites at 1/3 rate then switches to full gas rate. The gas valve (7) controls the gas rate “HIGH - LOW” to maintain the heating temperature measured by the thermostat sensor (16).

When demand is satisfied the burner is extinguished, the pump continues to run. The duration of each OFF cycle is 3 minutes before re-lighting automatically. Each ON cycle commences with a 45 second duration at third gas rate before switching to full rate if necessary.

On completion of a heating period the pump will continue to run for a period of 3 minutes (PUMP OVERRUN).

DOMESTIC HOT WATER MODE

Priority is given to hot water supply. A demand at a tap or shower will override any central heating requirement.

The flow of cold water will operate the DHW flow switch (10) which requests the 3 way valve (17) to change position to allow the pump (11) to circulate the primary water through the secondary DHW heat exchanger (18).

The appliance-will light automatically and the temperature of the domestic water is controlled by the thermostat sensor (15).

When the hot water demand ceases the burner will extinguish and for a period of 3 minutes the appliance remains ready in the DHW mode before returning to the central heating mode.

Technical Data – Page 7

GENESIS 80

Appliance Category	CAT II 2H 3+	
Heat Input C/H & DHW	Max	
kW	28.7	
Btu/h	97946	
Heat Output	Max	
kW	23.25	
Btu/h	79347	
Max Gas Rate	(natural gas) (After 10 Min)	
m³/h	2.74	
ft³/h	97	
Burner Pressure	(natural gas)	
	Max Rate	Min Rate
mbar	11.5 ± 0.5	1.5 ± 0.2
in wg	4.6 ± 0.2	0.6
Inlet Pressure	(natural gas)	
mbar	20	
in wg	8	
Burner Injector	(natural gas) 16 x 1.23mm Diameter	
Electrical Supply	230V~ 50Hz	
Power Consumption	150W	
Electrical Protection	IP 24	
External Fuse Rating	3A	
Internal Fuse Rating		
Fuse 1- 2AT 250V	To BS4265	
Fuse 2- 1.25AT 250V	To BS4265	

Flue Terminal Dimensions	Diameter	100mm
	Projection	70mm
Connections	All copper tails	
Gas Supply	-	22mm
Central Heating Flow	-	22mm
Central Heating Return	-	22mm
Cold Water Mains Inlet	-	15mm
DHW Flow	-	15mm
Pressure Relief Discharge	-	15mm
Outercase Dimensions		
Casing Height	-	850mm
Overall Height Inc Flue Elbow & Lower Cover	-	1050mm
Casing Width	-	440mm
Casing Depth	-	390mm
Clearances		
Both Sides	5mm Min	
Above Casing	170mm Min	
Below Casing	200mm Min	
Front	500mm Min (for Servicing)	
Front	5mm Min (in Operation)	

Weights	kg	lb
Packaged Boiler Carton	43.5	96
Packaged Flue Kit	7.1	15.6
Weight Empty	48.4	107
Installation Lift Weight	34.5	76

Central Heating Primary Circuit Pressures	bar	lb/in²
Safety Discharge	3	43.5
Max Operating	2.5	36.3
Min Operating	0.7	10
Recommended System Temperature Drop	11°C	20°F

DHW Circuit Pressures	bar	lb/in²
Max Operating	10	145
Min Operating	0.1	1.45
Min Operating Pressure at 9.5 l/min	0.5	7.25

Flow Rates	l/min	gal/min
DHW Flow Rate @ 30°c Rise	11.1	2.45
DHW Flow Rate @ 35°c Rise	9.54	2.1
Min Working DHW Flow Rate	2	0.44

Built In Bypass	l/h	gal/min
Min Circulation Rate (CH Primary Circuit) e.g. TRVs all closed	100	0.37

Pump
Available Head See graph below

Expansion Vessel	bar	lb/in²
Min Pre-charge Pressure	0.65	9.4
Nominal Pre-charge Pressure	0.7	10
	litre	gal
Max Capacity of CH System	125	28
Primary water content of boiler (unpressurised)	1.5	0.33

Temperatures
C.H. Flow Temp (adjustable) 35°C to 85°C max
D.H.W. Flow Temp (adjustable) 30°C to 60°C max

LPG Gases			
Propane and Butane			
Burner Injector 16 x 0.70mm diameter			
Burner Pressure		Max Rate	Min Rate
Propane	mbar	35.0	5.9
	in wg	14.0	2.4
Butane	mbar	26.7	4.3
	in wg	10.7	1.7
Inlet Pressures		Butane	Propane
	mbar	28	37
	in wg	11.2	14.8

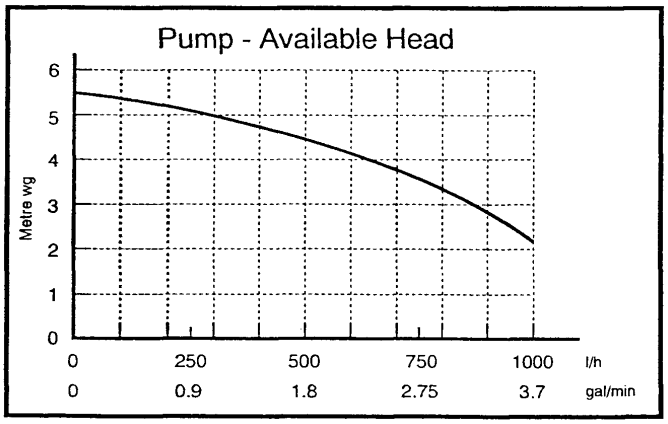

GENESIS 96

Appliance Category	CAT II $_{2H\,3+}$	
Heat Input C/H & DHW	Max	
kW	34.5	
Btu/h	11774	
Heat Output	Max	
kW	28.0	
Btu/h	95555	
Max Gas Rate	(natural gas) (After 10 Min)	
m³/h	3.29	
ft³/h	116	
Burner Pressure (natural gas)	Max Rate	Min Rate
mbar	13.1 ± 0.5	2.45 ± 0.2
in wg	5.2 ± 0.2	1.0
Inlet Pressure (natural gas)		
mbar	20	
in wg		
Burner Injector (natural gas) 16 x 1.28mm Diameter		
Electrical Supply	230V~ 50Hz	
Power Consumption	150W	
Electrical Protection	IP 24	
External Fuse Rating	3A	
Internal Fuse Rating		
Fuse 1- 2AT 250V	To BS4265	
Fuse 2- 1.25AT 250V	To BS4265	

Flue Terminal Dimensions	Diameter	100mm
	Projection	70mm
Connections		All copper tails
Gas Supply	-	22mm
Central Heating Flow	-	22mm
Central Heating Return	-	22mm
Cold Water Mains Inlet	-	15mm
DHW Flow	-	15mm
Pressure Relief Discharge	-	15mm
Outercase Dimensions		
Casing Height		850mm
Overall Height Inc Flue Elbow & Lower Cover		1050mm
Casing Width		440mm
Casing Depth		390mm
Clearances		
Both Sides	5mm Min	
Above Casing	170mm Min	
Below Casing	200mm Min	
Front	500mm Min (for Servicing)	
Front	5mm Min (in Operation)	
Weights	kg	lb
Packaged Boiler Carton	44.7	98.5
Packaged Flue Kit	7.1	15.6
Weight Empty	49.6	109.4
Installation Lift Weight	35.7	78.7
Central Heating Primary Circuit Pressures	bar	lb/in²
Safety Discharge	3	43 5
Max Operating	2.5	36 3
Min Operating	0.7	10
Recommended System Temperature Drop	11°C	20°F

DHW Circuit Pressures	bar	lb/in²
Max Operating	10	145
Min Operating	0.1	1.45
Min Operating Pressure at 11.5 l/min	0.83	12.0
Flow Rates	l/min	gal/min
DHW Flow Rate @ 30°c Rise	13.4	2.95
DHW Flow Rate @ 35°c Rise	11.5	2.53
Min Working DHW Flow Rate	2	0.44
Built In Bypass	l/h	gal/min
Min Circulation Rate (CH Primary Circuit) e.g. TRVs all closed	100	0.37
Pump		
Available Head	See graph below	
Expansion Vessel	bar	lb/in²
Min Pre-charge Pressure	0.65	9.4
Nominal Pre-charge Pressure	0.7	10
	litre	gal
Max Capacity of CH System	125	28
Primary water content of boiler (unpressurised)	1 7	0.37
Temperatures		
C.H. Flow Temp (adjustable)	35°C to 85°C max	
D.H.W. Flow Temp (adjustable)	30°C to 60°C max	

LPG Gases			
Propane and Butane			
Burner Injector 16 x 0.76mm diameter			
Burner Pressure		Max Rate	Min Rate
Propane	mbar	30.4	7.5
	in wg	12.2	3.0
Butane	mbar	24.0	5.8
	in wg	9.6	2.3
Inlet Pressures		Butane	Propane
	mbar	28	37
	in wg	11.2	14.8

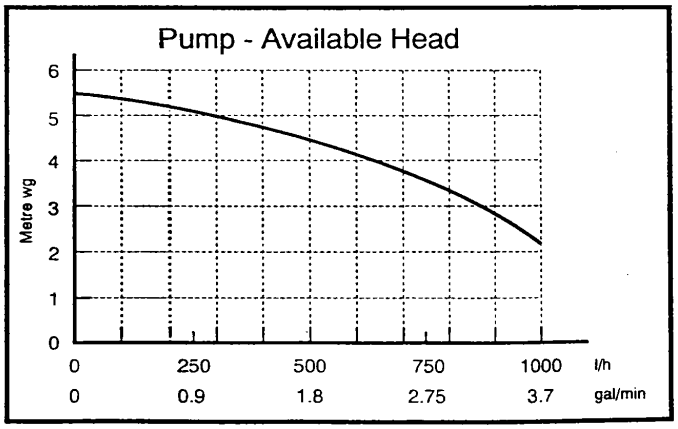

General Dimensions and Fixings – Page 9

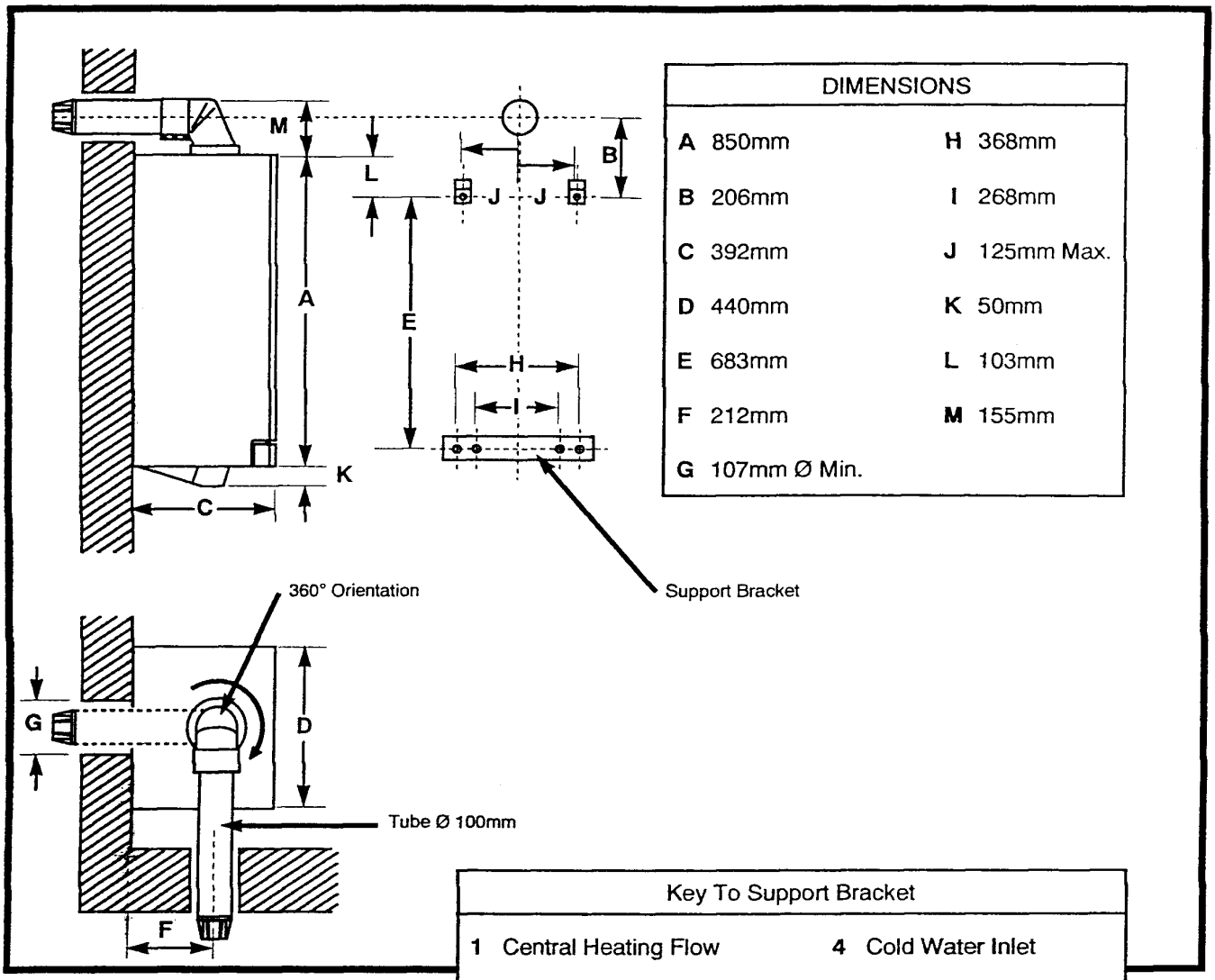

DIMENSIONS			
A	850mm	H	368mm
B	206mm	I	268mm
C	392mm	J	125mm Max.
D	440mm	K	50mm
E	683mm	L	103mm
F	212mm	M	155mm
G	107mm Ø Min.		

Key To Support Bracket			
1	Central Heating Flow	4	Cold Water Inlet
2	Domestic Hot Water Outlet	5	Central Heating Return
3	Gas Supply	6	Pressure Relief

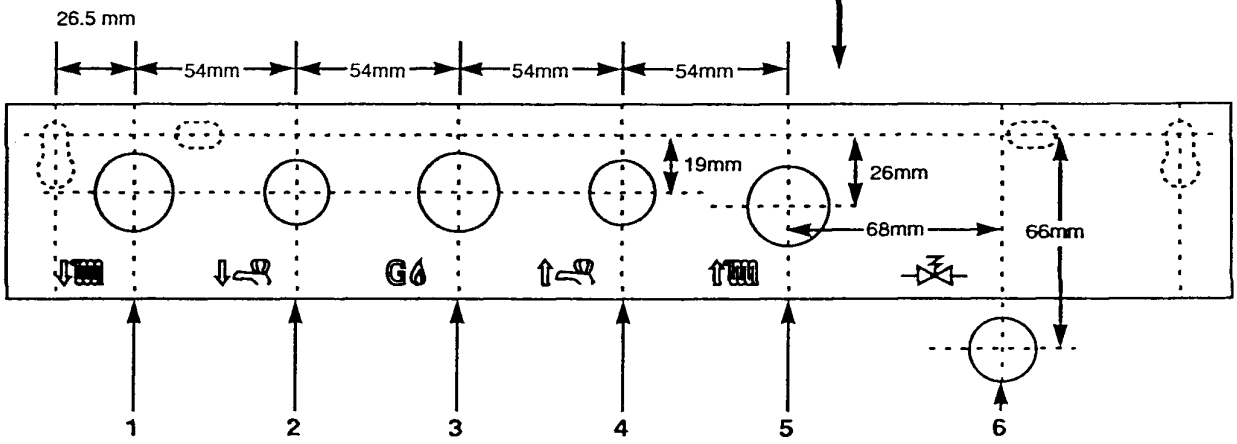

System Details – Page 10

The Genesis Combination Boiler is a 'Water Byelaws Scheme - Approved Product'.
To comply with the Water Byelaws your attention is drawn to the following installation requirements and notes (IRN).

1) IRN 001 - See text of entry for installation requirements and notes.
2) IRN 116- Byelaw 90 and 91.
3) IAN 302 - Byelaw 14.

Reference to the WRc publications, 'Water fittings and materials directory' and 'Water supply byelaws guide' give full details of byelaws and the IRNs.

Central Heating Circuit

The appliance is suitable for fully pumped **SEALED SYSTEMS ONLY.**

All systems should be thoroughly flushed prior to connection of the appliance. If the installation is on an existing sealed system, or a modified open system, it is particularly important to flush preferably using an appropriate descaling/flushing agent.

Where used, corrosion inhibitors, flushing agents/descalers should be approved and suitable for all system metals.

BYPASS

The appliance has an integral pre-set bypass, therefore no external bypass on the system is required. TRV's can be - used on all radiators.

SYSTEM CONTROL

Operation of the system under control of the boiler thermostat only does not produce the best results. The heating system should include a control system. This should comprise of at least a single channel timer.

Integral Single Channel Timer Kits are available as optional extras.

For optimum operating conditions and best economy the fitting of a programmable thermostat is recommended.

Programmable thermostats - the 'Baxi Genesis Controllers' are available as an optional extra.

SYSTEM DETAILS – Page 11

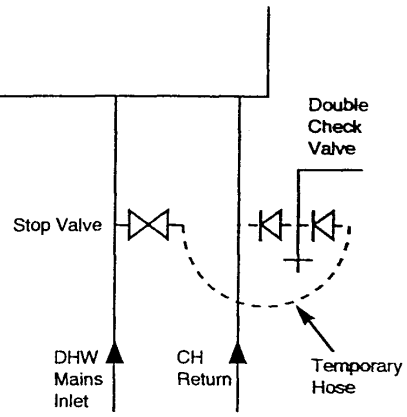

A filling point connection on the central heating return pipework must be provided to facilitate initial filling and pressurising and also any subsequent water loss replacement/refilling.

The filling method adopted must be in accordance with all relevant water supply byelaws using approved equipment.

Your attention is drawn to: IRN 302 and Byelaw 14.

Unvented primary circuits may be filled or replenished by means of a temporary connection between the circuit and a supply pipe provided a 'Listed' double check valve or some other no less effective backflow prevention device is permanently connected at the inlet to the circuit and the temporary connection is removed after use.

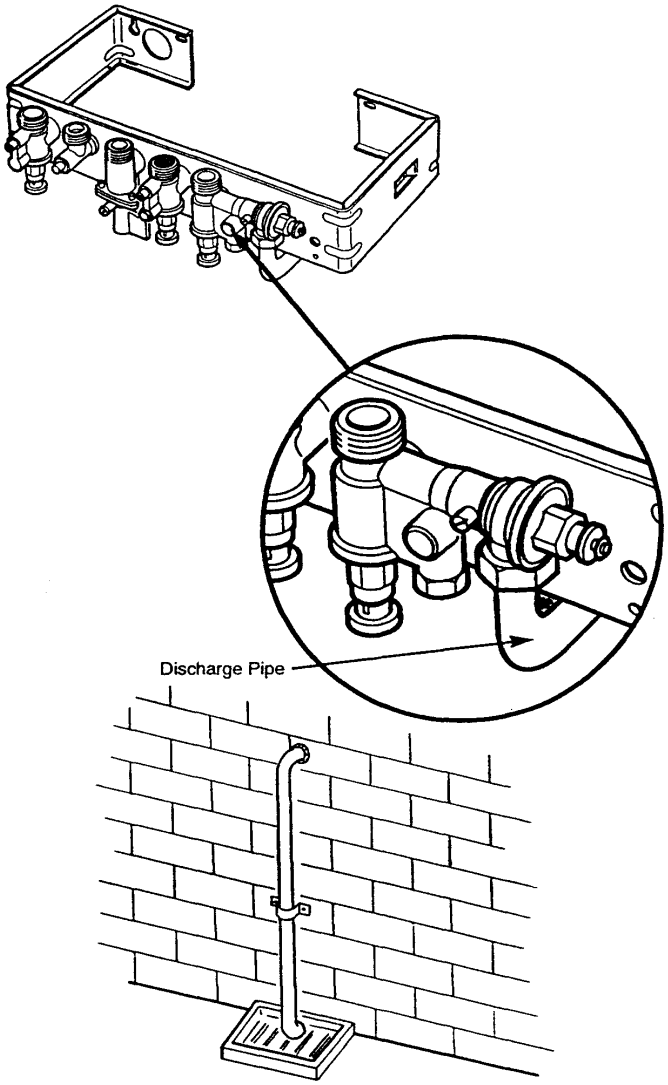

PRESSURE VESSEL
The appliance expansion vessel is pre-charged to 0.7 bar (10 lb/in^2). Therefore, the minimum cold fill pressure is 0.7 bar. The vessel is suitable for correct operation for system capacities up to 125 litres (27.5gal). For greater system capacities an additional expansion vessel must be fitted - refer to BS 7074 Pt 1.

PRESSURE RELIEF VALVE
The pressure relief valve is set at 3 bar, therefore all pipework, fittings etc should be suitable for pressures in excess of 3 bar.

The pressure relief discharge pipe should be not less than 15mm, run continuously downward, and discharge outside the building, preferably over a drain, and in such a manner that no hazard occurs to occupants or cause damage to wiring or electrical components.

The end of the pipe should terminate facing down and towards the wall.

THE DISCHARGE MUST NOT BE ABOVE A WINDOW, ENTRANCE OR OTHER PUBLIC ACCESS. CONSIDERATION MUST BE GIVEN TO THE POSSIBIUTY THAT BOILING WATER /STEAM COULD DISCHARGE FROM THE PIPE.

SYSTEM DETAILS – Page 12

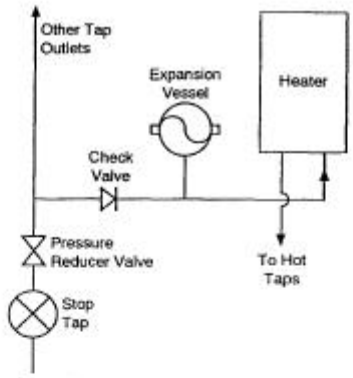

WATER FLOW DIAGRAM

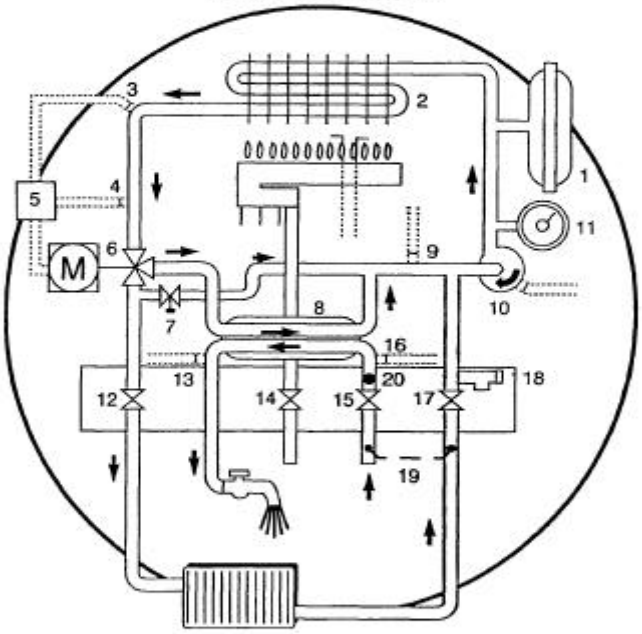

Key

1 Expansion Vessel
2 Primary Heat Exchanger
3 Safety Thermostat
4 CH Thermostat Sensor
5 Electrical Box
6 3 Way Valve
7 By-pass Valve
8 DHW Secondary Heat Exchanger
9 CH Flow Switch
10 Pump
11 Pressure Gauge
12 CH Flow Valve
13 DHW Thermostat Sensor
14 Gas Inlet
15 DHW Mains Inlet
16 DHW Flow Switch
17 CH Return Valve
18 Pressure Relief Valve
19 Filling Loop
20 Flow Regulator

Domestic Hot Water Circuit

All DHW circuits, connections, fittings etc should be fully in accordance with relevant standards and water supply bye-laws.

Your attention is drawn to: IRN 116 and Byelaw 90 and 91. Sealed primary circuits and / or secondary hot water systems shall incorporate a means for accommodating the thermal expansion of water to prevent any discharge from the circuit and / or system except in an emergency situation.

When the system includes any device which prevents water expanding back towards the supply (check valve, loose jumpered stopcock; water meter, water treatment device), then an expansion vessel must be fitted e.g. (Zilmet 160ml, R ½ 15bar).
To comply with Byelaw 91,a check valve must also be fitted on the supply as shown, to ensure efficient operation and also to prevent the reverse flow of hot water into the supply pipe.

IF THE HOT WATER EXPANSION IS NOT PROVIDED FOR, THEN HIGH PRESSURES CAN DEVELOP WHICH MAY RESULT IN DAMAGE TO FITTINGS AND DEVICES ON THE SYSTEM.

The appliance maximum working mains pressure is 10 bar (150 lb/in^2), therefore all pipework, connections, fittings etc should be suitable for pressures in excess of 10 bar: A pressure reducing valve must be fitted for pressures in any outlet fittings, such as a shower excess of 10 bar: The manufacturer of valve, may require a lower maximum pressure. The pressure reduction must take account of all fittings connected to the DHW system.

SHOWERS
If a shower control is supplied from the appliance it should be of the thermostatic or pressure balanced type. Thermostatic type shower valves provide the best comfort and guard against water at too high a temperature. Existing controls may not be suitable - refer to the shower manufacturers.

HARD WATER AREAS
If the area of the installation is recognised as a HARD WATER AREA then a suitable device should be fitted to treat the mains water supply to the appliance.

Site Requirements – Page 13

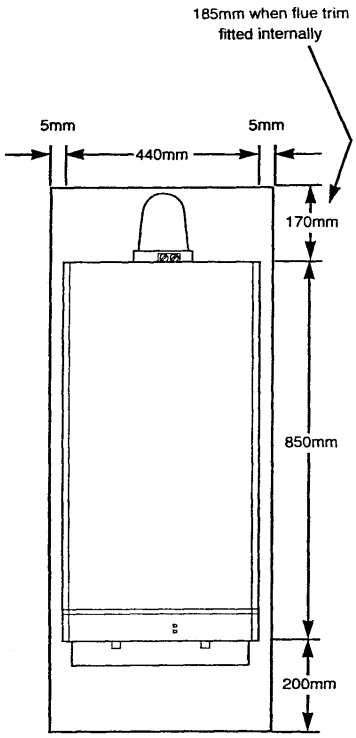

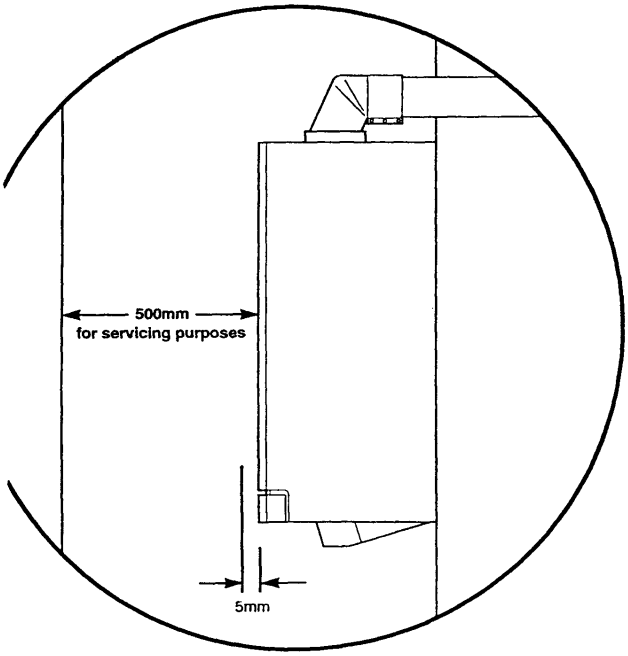

The installation must be carried out by a CORGI Registered Installer or other competent person and be in accordance with the relevant requirements of GAS SAFETY (Installation and Use) REGULATIONS, the BUILDING REGULATIONS (Scotland) (Consolidation), the LOCAL BUILDING REGULATIONS, the current I.E.E. WIRING REGULATIONS and the bye laws of the LOCAL WATER UNDERTAKING. (Where no specific instruction is given reference should be made to the relevant British Standard Codes of Practice.)

B.S. Codes of Practice

Standard	Scope
BS 6891	Gas Installation.
BS 5546	Installation of hot water supplies for domestic purposes.
BS 5449 Part 1	Forced circulation hot water systems.
BS 6798	Installation of gas fired hot water boilers.
BS 5440 Part 1	Flues.
BS 5440 Part 2	Air supply
BS 7074	Expansion vessels and ancillary equipment for sealed water systems.

WARNING

The addition of anything that may interfere with the normal operation of the appliance without the express written permission of Baxi Heating could invalidate the appliance warranty and infringe the GAS SAFETY (Installation and Use) REGULATIONS.

Clearances

A flat vertical area is required for the installation of the boiler.

These dimensions include the necessary clearances around the appliance for case removal, spanner access and air movement. Additional clearances may be required for the passage of pipes around local obstructions such as joists running parallel to the front face of the appliance.

Location

The appliance may be fitted to any suitable wall with the flue passing through an outside wall and discharging to atmosphere in a position permitting satisfactory removal of combustion products and providing an adequate air supply. The appliance should be fitted within the building unless otherwise protected by a suitable enclosure ie. garage or outhouse. (The appliance may be fitted inside a cupboard - see page 14).

If the appliance is fitted in a room containing a bath or shower reference must be made to the Current I.E.E. Wiring Regulations and Building Regulations. If the appliance is to be fitted into a building of timber frame construction then reference must be made to British Gas document DM2.

SITE REQUIREMENTS – Page 14

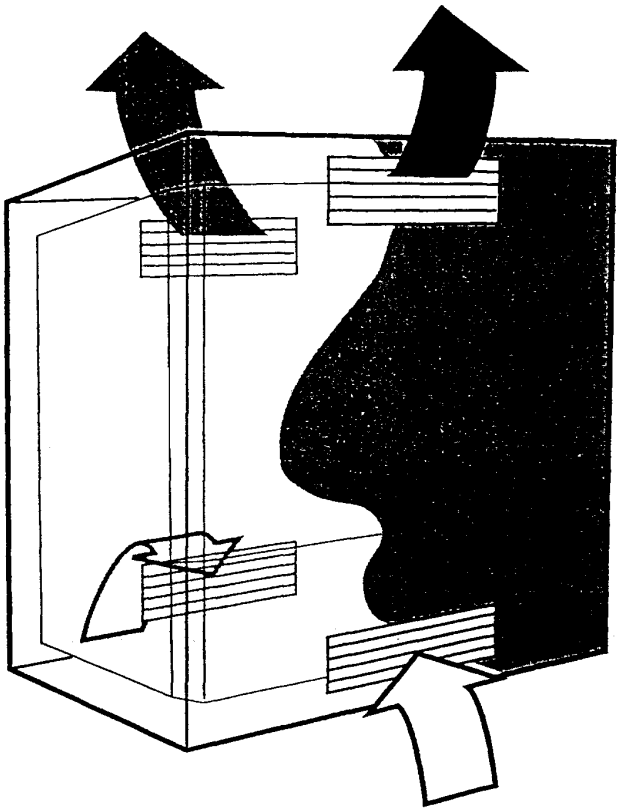

Ventilation of Compartments

Where the appliance is installed in a cupboard or compartment, air vents are required (for cooling purposes) in the cupboard or compartment at high and low level which may communicate with a room or direct to outside air.

Detailed recommendations for air supply are given in BS 5440: Part 2.

An existing cupboard or compartment may be used, provided that it is modified for the purpose. Recommendations for air supplies and details of -essential cupboard compartment design are given In BS 5440:Part2.

NOTE:-Both air vents must communicate with the same room or both be on the same wall to outside air.

Genesis 80

Position of Air Vent	Air from Room	Air direct from Outside
High	257cm^2 (39in^2)	128cm^2 (19.5in^2)
Low	257cm^2 (39in^2)	128cm^2 (19.5in^2)

Genesis 96

Position of Air Vent	Air from Room	Air direct from Outside
High	311cm^2 (48.2 in^2)	156cm^2 (24.1 in^2)
Low	311cm^2 (48.2 in^2)	156cm^2 (24.1 in^2)

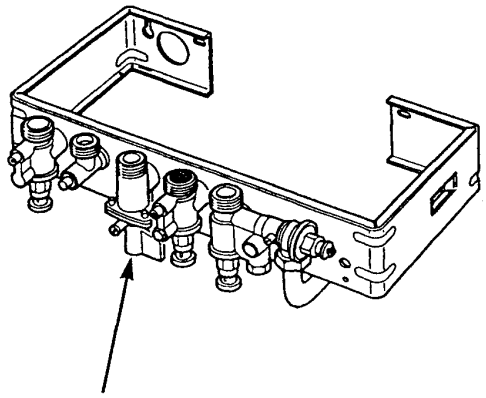

Gas Supply

The-gas installation should be in accordance with BS 6891.

The connection to the appliance is a 22mm copper tail located at the rear of the gas cock.

Ensure that the pipework from the meter to the appliance is of adequate size. Do not use pipes of a smaller diameter than the appliance gas connection.

Electrical Supply

External wiring must be correctly earthed, polarized and in accordance with current I.E.E. Wiring Regulations.

The mains supply is 230V - 50Hz fused at 3A.

NOTE:-The method of connection to the electricity supply must facilitate complete electrical isolation of the appliance.

Connection may be via a fused double-pole isolator with a contact separation of at least 3mm in all poles and servicing the appliance and system controls only.

SITE REQUIREMENTS – Page 15

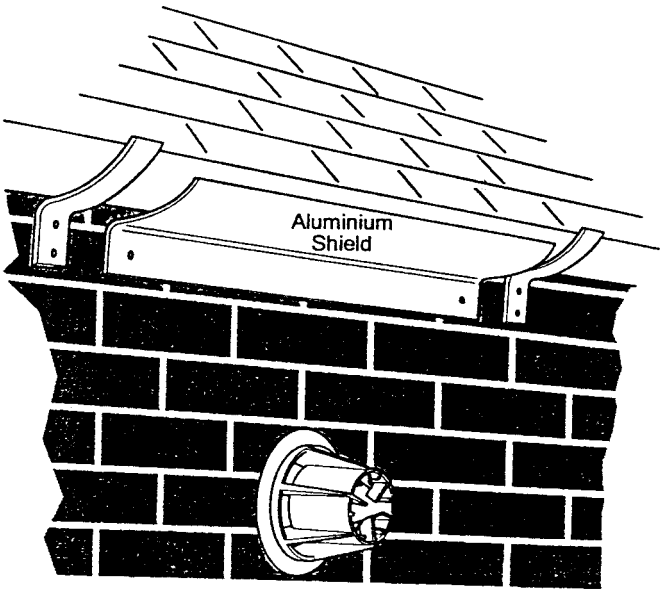

Flue

An internal fitting kit is available for installations where the flue terminal is inaccessible from the outside. -(Part No 236441). This is available from merchants or direct from Baxi free of charge.

The following guidelines indicate the general requirements for siting balanced flue terminals. Recommendations for flues are given in BS 5440 Pt.1.

If the terminal is fitted within 1 metre (39 in) of a plastic gutter, within 500mm (19 ½ in) of a painted eave or a painted gutter, an aluminium shield of at least 1 metre (39 in) long should be fitted to the underside of the gutter or painted surface. An air space of 5mm (3/16 in) should be left between shield and gutter.

If the terminal discharges onto a pathway or passageway, check that combustion products will not cause a nuisance and that the terminal will not obstruct the passageway.

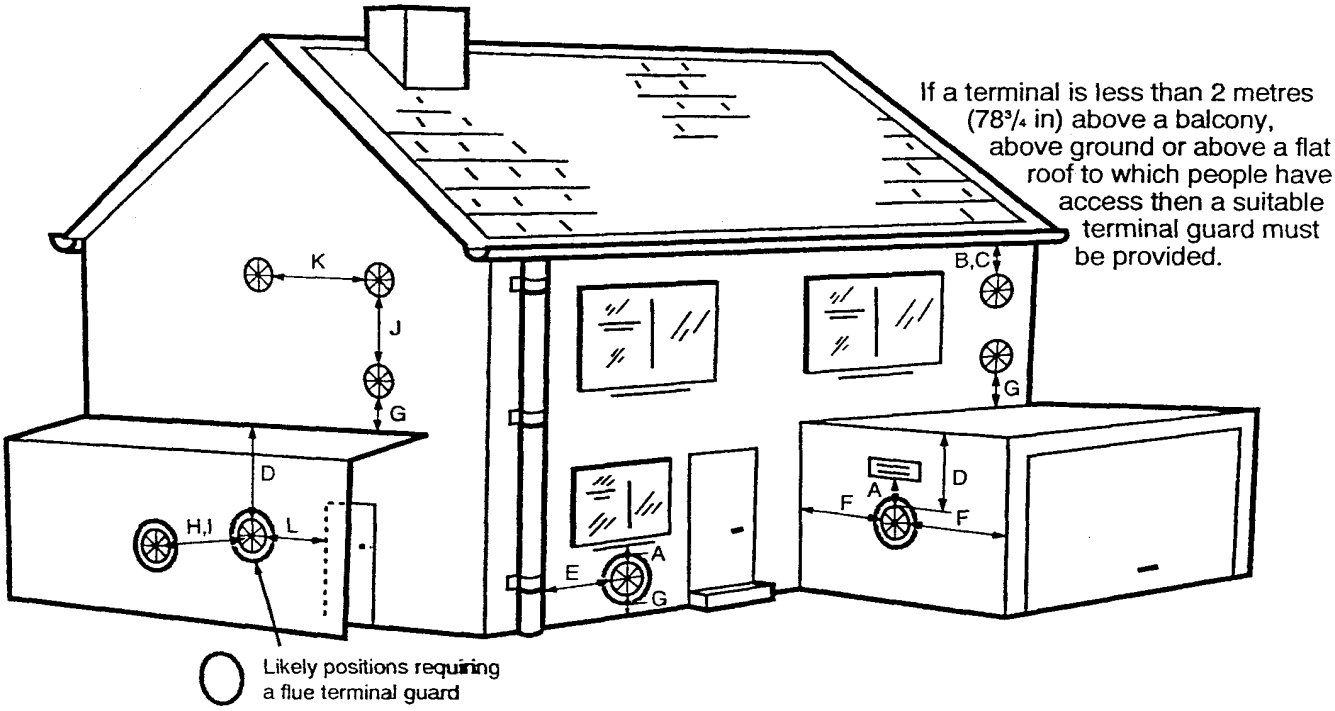

	Terminal Position with Minimum Distance	(mm)
A	Directly below an openable window or other opening. e.g. an air brick.	300
B	Below gutters.	25
C	Below eaves, soil pipes or drain pipes.	75
D	Below balconies or car port roof	200
E	From vertical drain pipes and soil pipes.	75
F	From internal or external corners.	25
G	Above ground, roof or balcony level.	300
H	From a surface facing a terminal.	600
I	From a terminal facing a terminal.	1200
J	Vertically from a terminal on the same wall.	1500
K	Horizontally from a terminal on the same wall.	300
L	For an opening in a car port (e.g. door, window) into a dwelling.	1200

SITE REQUIREMENTS – Page 16

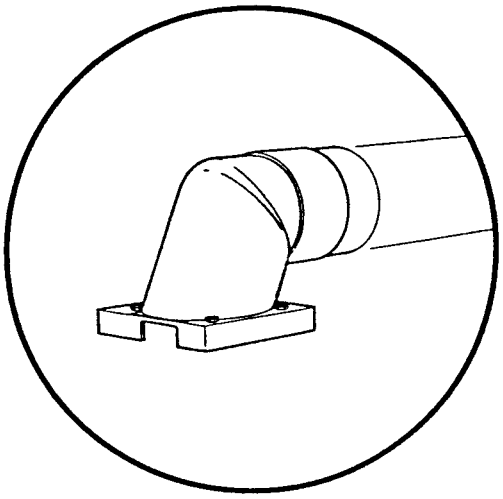

Flue Dimensions

The standard flue supplied with the appliance is suitable for use with flue lengths between 220mm (8 21/32in) and 610mm (24in).

TOTAL FLUE LENGTH PERMISSIBLE IS:
3 METRES MAX.

Terminal Guard

When codes of practice dictate the use of terminal guards, they can be obtained from most Plumbers and Builders Merchants nationwide.

When ordering a terminal guard, quote the appliance model number.

The guard manufacturers listed below can be contacted for terminal sizes and guard model numbers.

Tower Flue Components Ltd.,
Tower House,
Vale Rise,
Tonbridge,
Kent.
Tel: 01732 351555.

Quinnell, Barrett & Quinnell,
884 Old Kent Road,
London, SE15 1NL
Tel: 0171 639 1357.

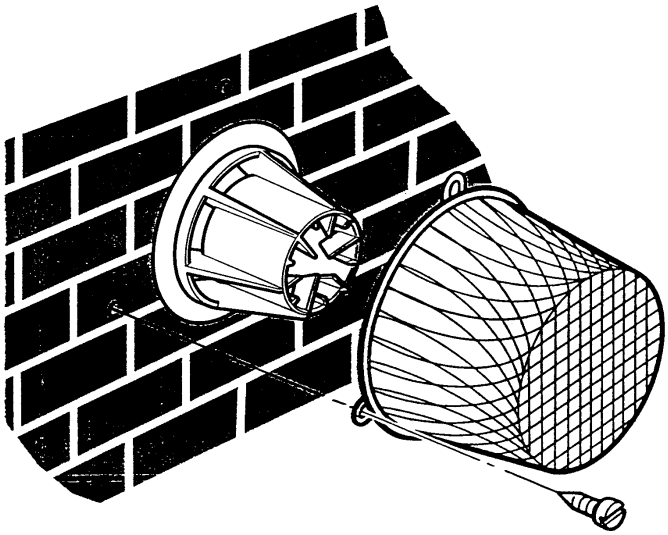

FIXING

The flue terminal guard should be positioned centrally over the terminal and fixed as illustrated.

Installation – Page 17

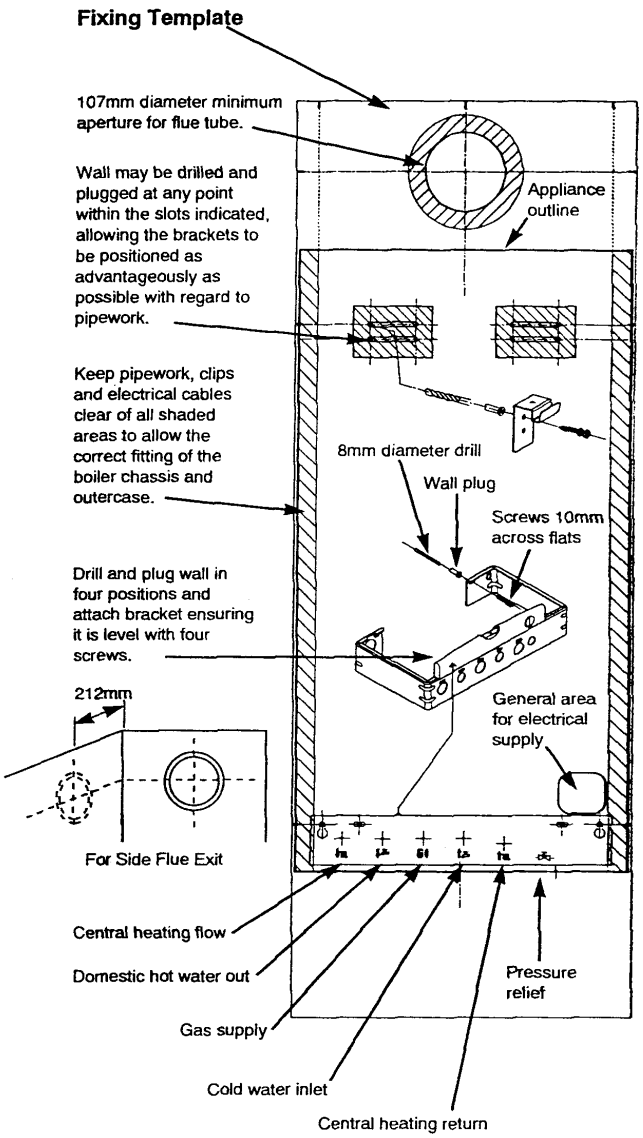

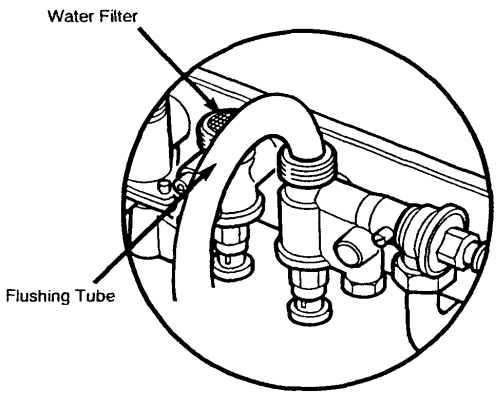

Initial Preparation

Remove the fixing template from the small carton.

After considering the site requirements (see page 13) position the template on the wall.

Mark the position of the fixing holes for the two hooks. Use the upper two holes where possible.

Mark the centre of the flue hole (rear exit). For side exit, mark as shown. If required, mark the position of the gas and water pipes. Remove the template.

Cut the hole for the flue (minimum diameter 107mm).

Drill and plug the wall as previously marked. Secure the two hooks to the wall.

Insert the two outer support bracket fixing screws, leaving them sufficiently proud to engage in the keyhole slots.

GENESIS 96 ONLY
Before fixing the support bracket to the wall remove the **blue** regulator unit from the inlet connection of the cold water isolating valve. Replace with the **red** regulator supplied in the contents kit (See page 41).

Attach the support bracket and ensuring it is level, secure to the wall.

Insert the two inner screws.

Connect the gas and water pipes to the valves on the support bracket using the copper tails supplied. Ensure the sealing washers are fitted correctly. **(The rubber washer is for use on the gas connection only. The fibre washers are for the water circuit connections.)**

Connect a pressure relief discharge pipe to the safety valve tail routed to discharge safely outside the property.

The symbols for each connection are embossed on the support bracket.

Flushing
Flush thoroughly (see system notes). There is a plastic tube in the contents kit to aid flushing.

Insert in to valve outlet as shown.

Fit the water filter supplied in the kit to the cold water inlet valve.

INSTALLATION – Page 18

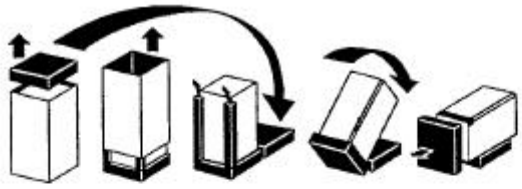

Preparing The Boiler

Follow the sequence depicted on the carton to unpack the boiler.

Remove the lower cover poly bag assembly and contents kit before laying the boiler on its back supported by the polystyrene block.

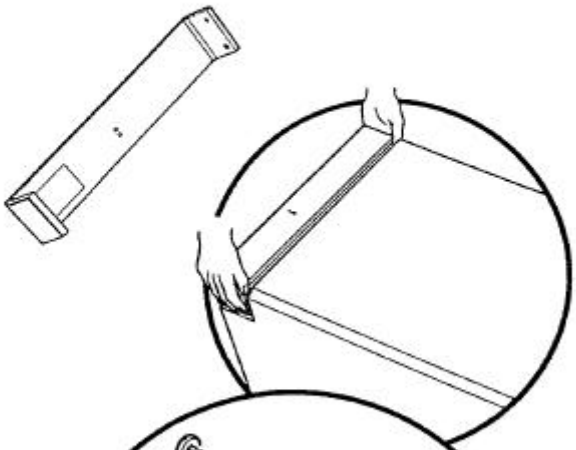

Hinge down the lower door panel and spring off.

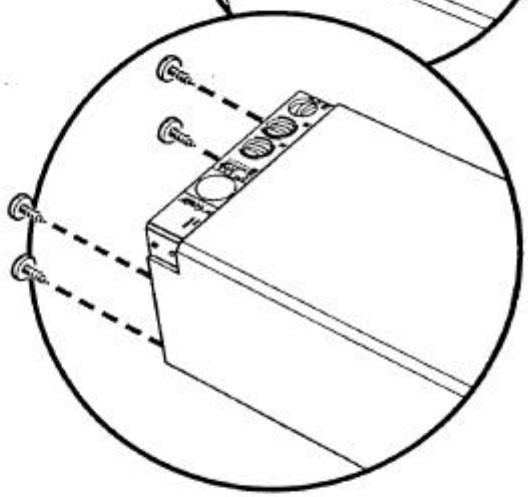

Remove the four securing screws, slide and lift away the outer case.

Remove the sealing plugs from the copper bends.

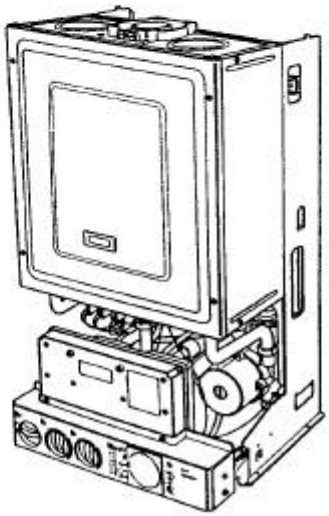

Stand the boiler on its base on the carton sleeve.

Note: A small amount of water may drain from the boiler in the upright position.

INSTALLATION – Page 19

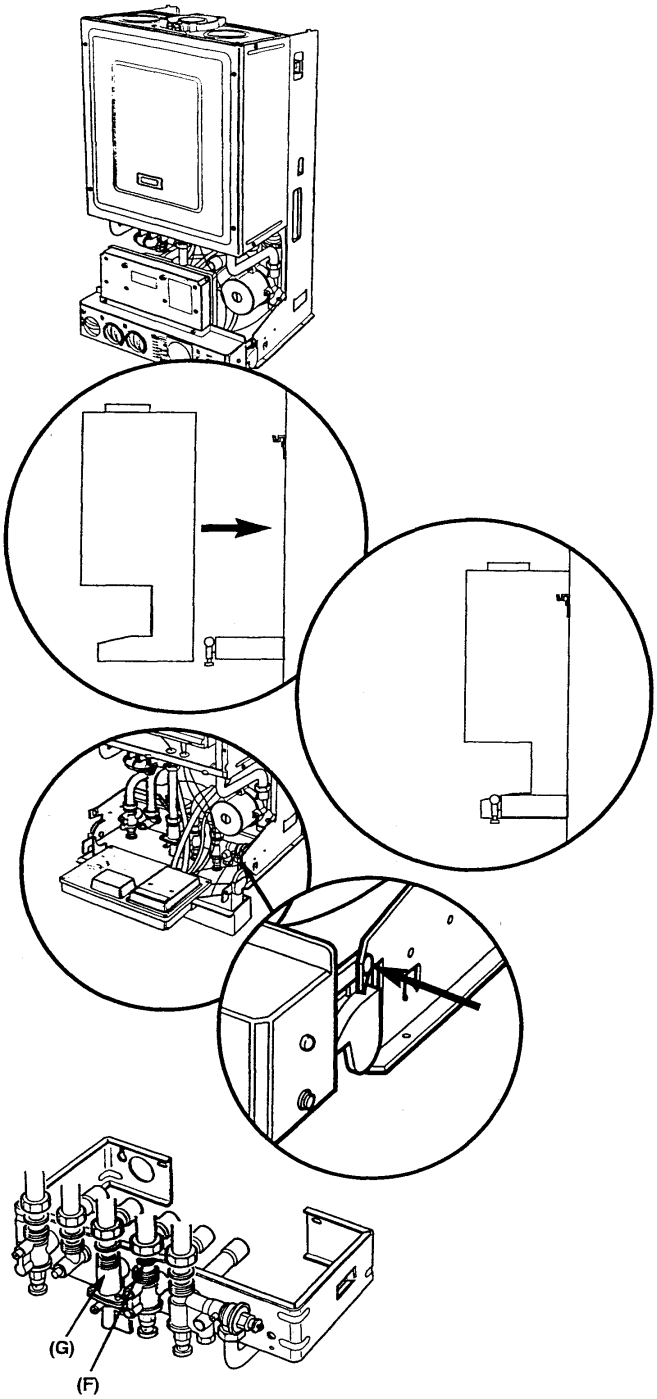

Fitting The Boiler

Lift the boiler using the lower edge of the combustion box and the hand holds in the chassis.

Place boiler on the support bracket, slide back then lift to engage on top hooks.

Hinge down the electrical box to gain access to the connections between boiler and valves.

At both sides push in the two tabs - hinge box down by rotating.

Check the inlet water filter is fitted (F).

Make the gas connection first (G). This will centralise the boiler.

Insert the sealing washers between the valve outlet face and the flange on the copper bends. **The rubber washer is for use on the gas connection only. The fibre washers are for the water circuit connections.**

Tighten the connections.

spares & parts online IBASIS.CO.UK

Fitting The Flue – Page 20

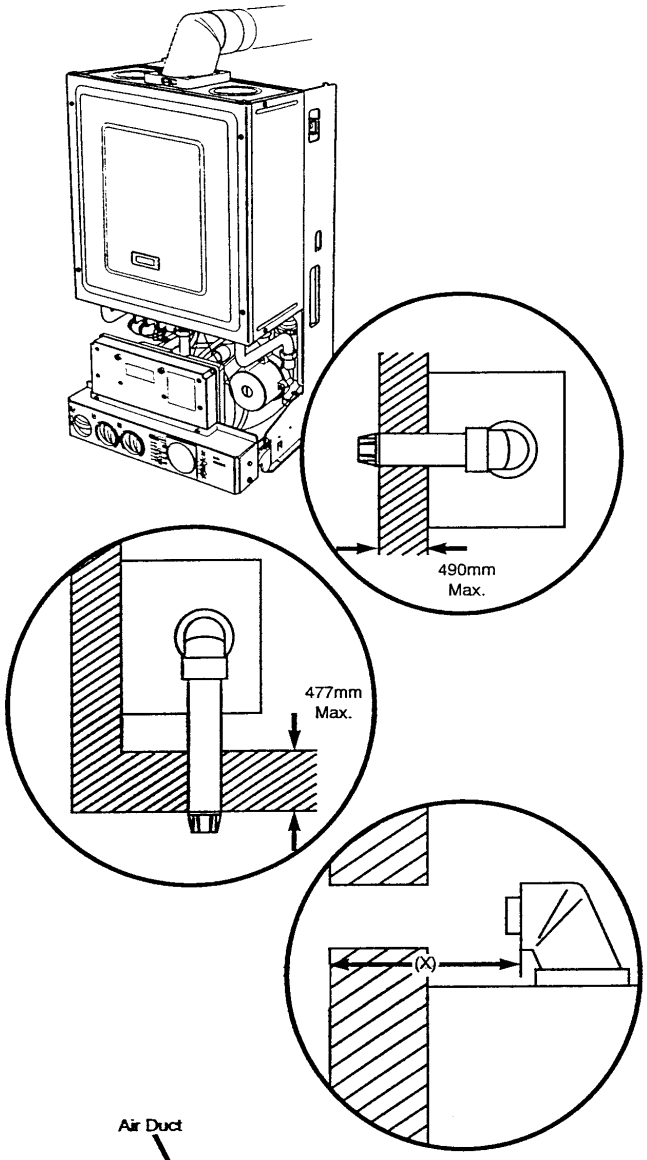

HORIZONTAL FLUE

The standard flue supplied with the appliance is suitable for lengths 220mm minimum to 610mm maximum.

Rear flue: maximum wall thickness - 490mm.

Side flue,
(left or right): maximum wall thickness - 477mm.

If fitting the optional Intel fitting kit, flue extension kit or elbows refer to the instructions provided with the kits.

Place the flue elbow on to the flue connection, with the outlets facing the wall opening.

Measure the distance from the outside wall face to the elbow. This is to be dimension (X)

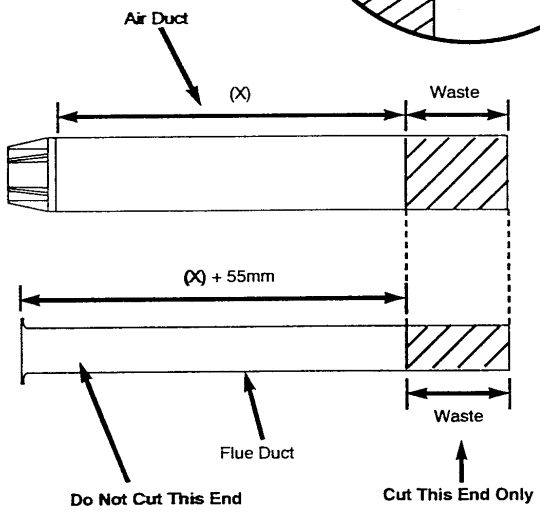

Mark dimension (X) on the plastic air duct measuring from the flue terminal as shown.

Measure the length of waste material from the air duct.

Take the aluminium flue duct and mark off this length. from the plain end. Do not cut the flared end.

The required dimension of the flue duct is (X)+55mm.

IMPORTANT:
Check your measurements before cutting.

Cut the ducts to size.

Fitting The Flue – Page 21

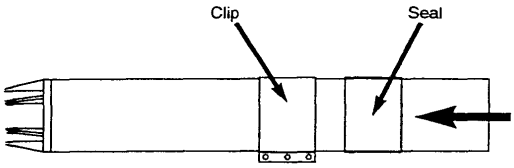

Slide the rubber seal and clip over the air duct.

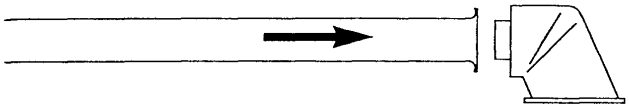

Engage the flared end of the flue duct onto the flue elbow.

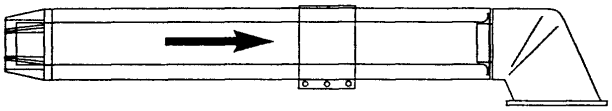

Insert the flue duct into the air duct and engage it in the terminal.

Slide the rubber sleeve over the joint between the air duct and elbow.

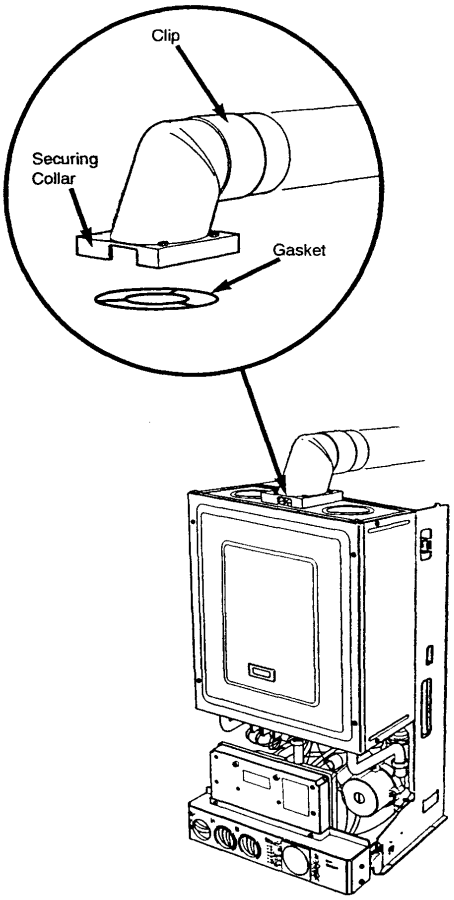

Align the clip over the rubber seal. For neatness the screws on the clip flange should be below the air duct if possible, providing they remain accessible.

Secure the clip.

Place the flue gasket on the boiler flue connection.

Slide the flue ducts through the hole in the wall.

Engage the elbow flange and collar on to the flue connection on top of the boiler. Align the cut-out in the collar with the two sampling points. Secure with the four screws.

Make good between the wall and air duct outside the building.

Fit the circular flue trim outside if required. Fit a terminal guard if necessary (see page 16).

VERTICAL FLUE

Only a flue approved with the Baxi Genesis can be used.

For information on vertical flues consult the Genesis Installer Guide or Notes for Guidance supplied with the vertical flue pack.

Making The Electrical Connections – page 22

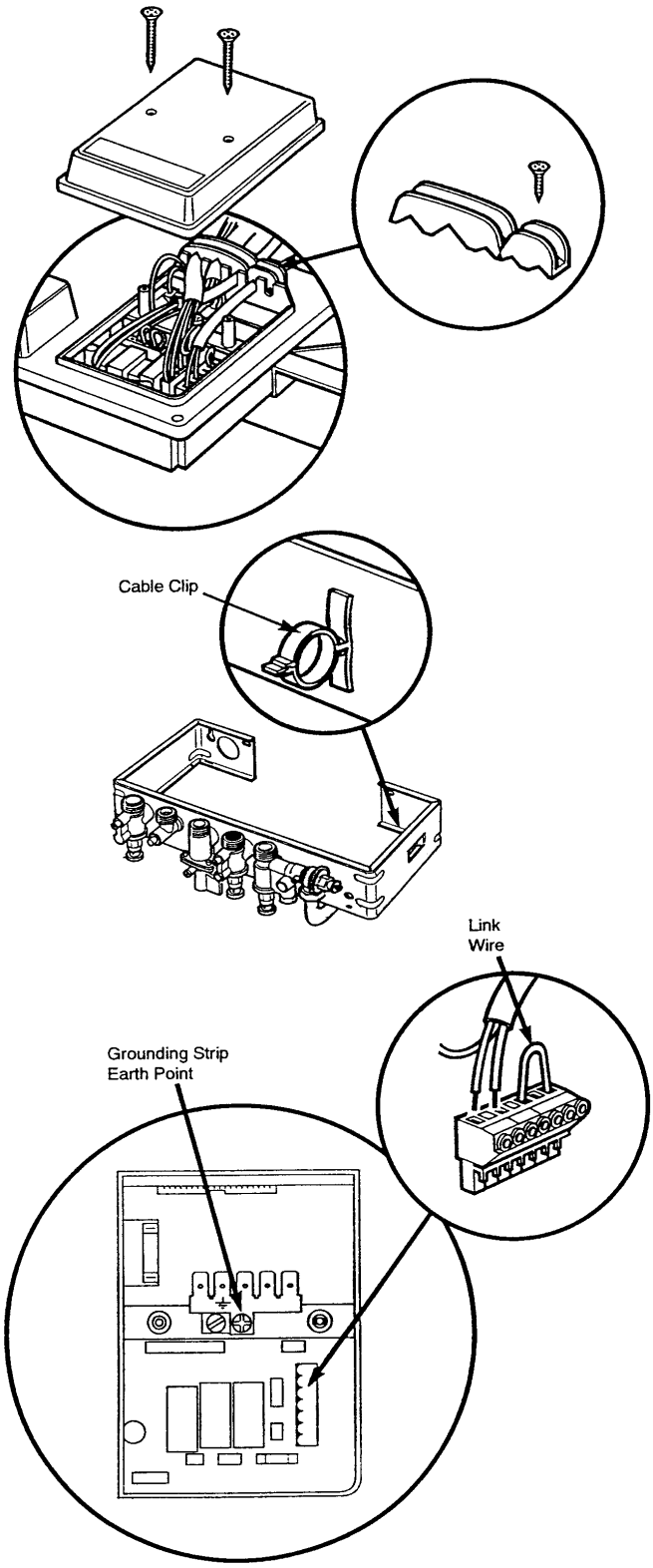

The electrical connections are on the right hand side of the unit.

Undo the screws securing the small cover and remove the cover.

Undo the screw securing the right hand cable clamp and hinge up.

If fitting an integral timer kit please refer to kit instructions at this stage, paying particular attention to voltage requirements.

Route the incoming electrical cable/s over the top edge of the support bracket. **This will prevent damage to the cables**.

Lay the cable/s through the cable clamp to gauge the length of cable required when the plug is connected.

Connect the (L) and (N) wires to the multipin plug, and the earth wire to the grounding strip earth point.

The incoming cable/s can be routed through the cable clip at the right hand side of the support bracket.

Check the electrical installation for earth continuity, short-circuits, resistance to earth-correct polarity and fuse failure.

CONNECTING AN EXTERNAL DEVICE

If a Baxi Genesis Controller (programmable thermostat) is fitted refer to the instructions supplied with it.

To connect an external timer or room thermostat, remove the link wire between terminals 1 & 2.

This connection delivers a low voltage switching signal to the external controls, therefore only devices having **voltage-free** switch contacts can be connected.

IMPORTANT: DO NOT CONNECT MAINS 230V TO TERMINALS 1,2 OR 3- DAMAGE TO THE P.C.B. WILL OCCUR.

Making The Electrical Connections – page 23

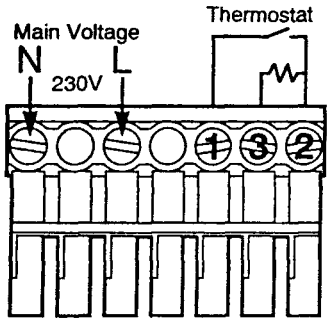

Fitting a Room Thermostat

A 2-wire or 3-wire **low voltage** thermostat can be fitted to the Genesis plug.

To fit a 2-wire thermostat, remove link, and wire the thermostat switch between positions 1 & 2.

To fit a 3-wire thermostat, remove link, and wire the thermostat switch between positions 1 & 2. The anticipator should be wired to position 3, as this provides a continuous 24V supply.

FITTING AN EXTERNAL TIMER

The external timer must have **voltage-free** switch contacts.

The timer switch must be connected between positions 1 & 2.

FITTING A FROST THERMOSTAT

The frost thermostat must have **voltage-free** switch contacts.

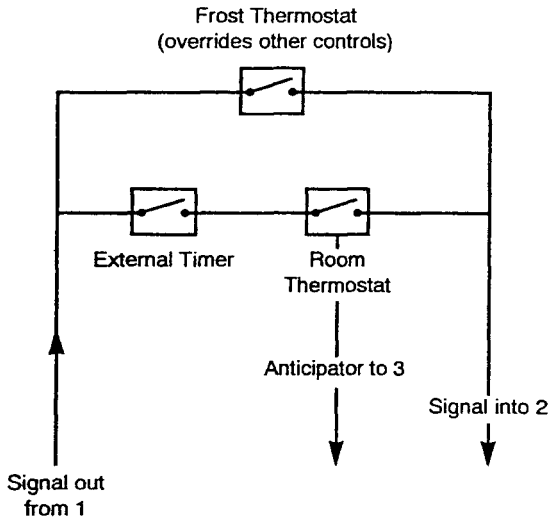

All switching components must have voltage-free contacts.

If room and frost Thermostats, and an external timer are to be incorporated in the control system they should be wired as shown.

Connect the multipin plug into the socket on the power board.

Secure the incoming cable/s with the cable damp and replace the cover.

Schematic Wiring Diagram – Page 24

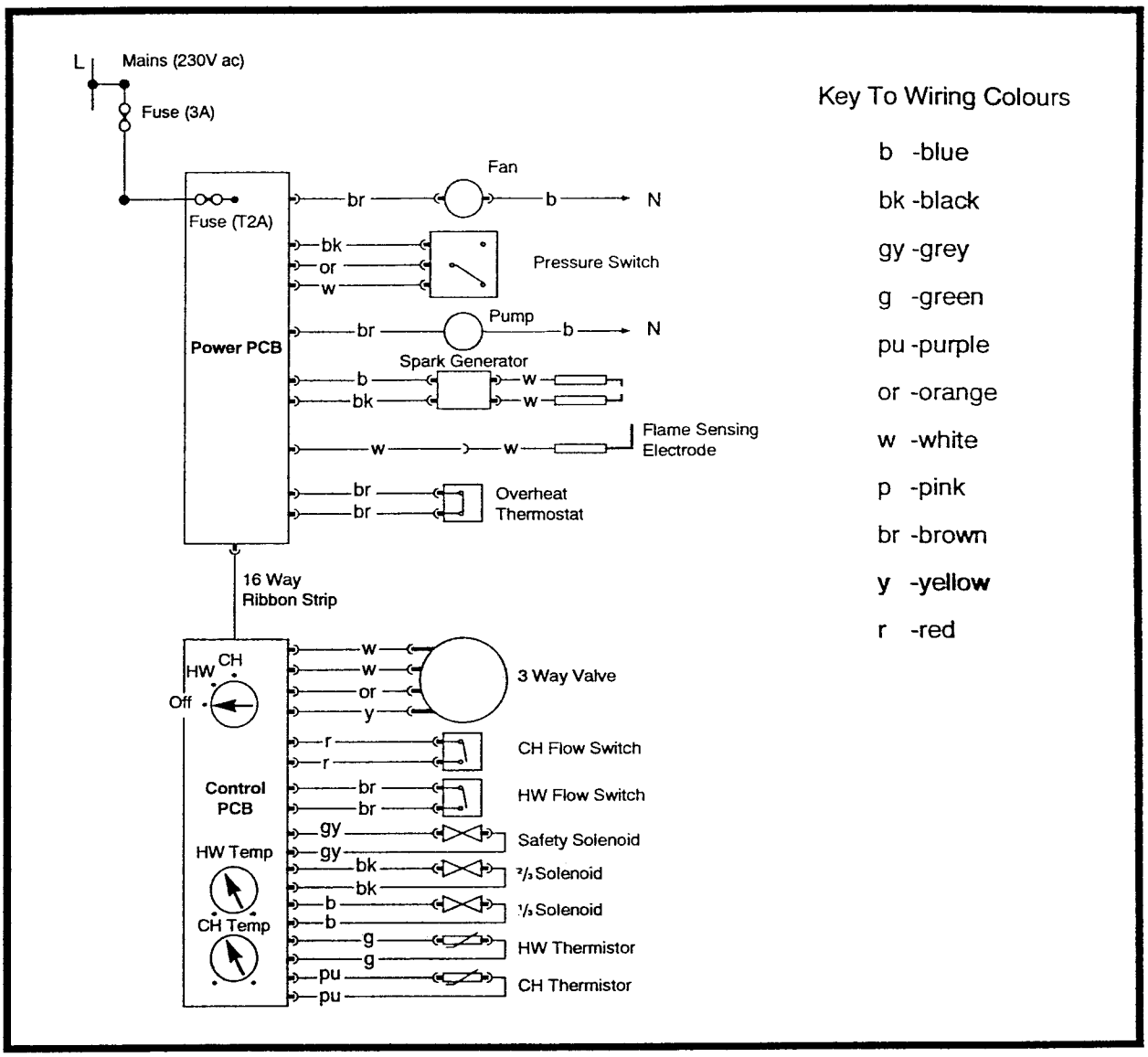

Illustrated Wiring Diagram – Page 25

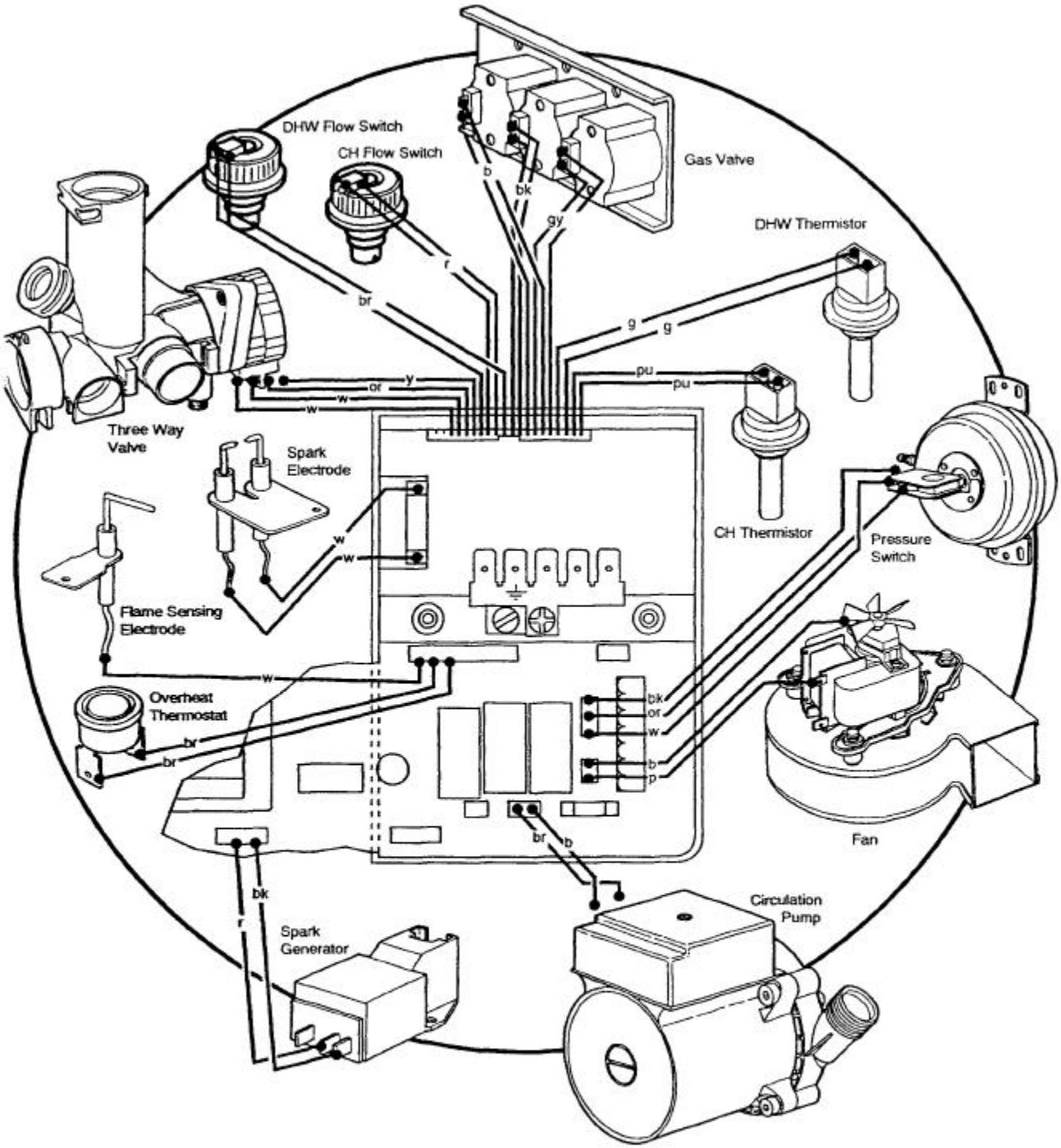

Wiring Key

b	-blue	w	-white
bk	-black	p	-pink
gy	-grey	br	-brown
g	-green	y	-yellow
pu	-purple	r	-red
or	-orange		

Commissioning The Appliance – Page 26

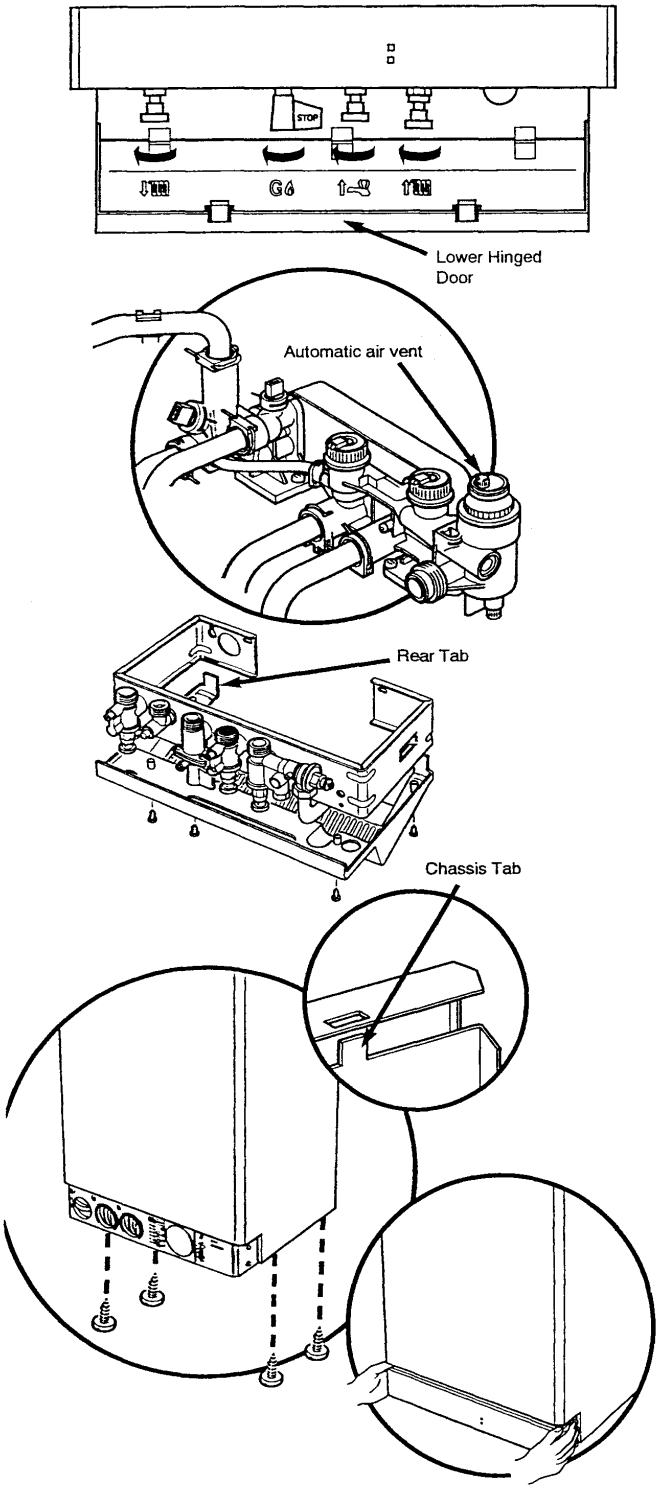

Reference should be made to BS 5449 Section 5 when commissioning the appliance.

Open the cold feed to the appliance.

Open all hot water taps to purge the DHW system.

Ensure that the filling loop is connected, and open the heating flow and return valves on the appliance.

Open the automatic air vent. To help purge the primary circuit turn the pump on & off several times by using the ON-OFF selector switch.

Pressurise the system to 1.0 bar and disconnect the filling loop.

Turn the gas supply on and purge the system according to BS 6891.

Test for gas soundness.

Run the system and check the appliance for correct operation. Check that there is an adequate gas supply pressure at the gas tap (preferred minimum pressure is 19.5mbar).

Fitting The Outer Case

Locate lower cover below support bracket with isolating valve spindles protruding through the slot.

Locate rear tabs through slots in support bracket -flange and secure with the four-screws.

Fit lower hinged door by sliding the tabs into the cut-outs.

Hinge up, locating the two front tabs into the slots.

Remove the protective film from the outercase.

Position outercase on the chassis, ensuring that the two slots in the top flange align with the tabs on the chassis.

Insert the four fixing screws into the base of the chassis.

Replace the lower door panel by springing both ends on to the pivots.

Hinge up to close.

Instruct the user in the operation of the appliance and system, explaining the operational sequence.

Hand over these instructions and the users guide.

Emphasise the need for regular maintenance and returning of the guarantee card.

Servicing The Appliance – Page 27

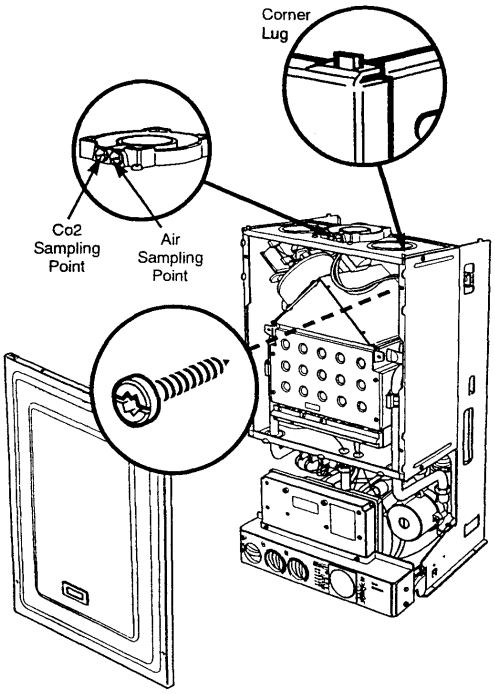

Annual Servicing

For reasons of safety and economy, it is recommended that the appliance is serviced annually.

To measure the Co% and (Co_2% content of the flue products, remove the LH sample screw and insert a suitable sampling probe.

Ensure that the appliance is cool.

Ensure that both the gas and electrical supplies to the appliance are isolated.

Remove the outer case and lower door panel (See Installation, p18).

Remove the screws securing the door panel.

Remove the door by lifting its lower edge forwards and upwards, and disengage the lugs on the top corners.

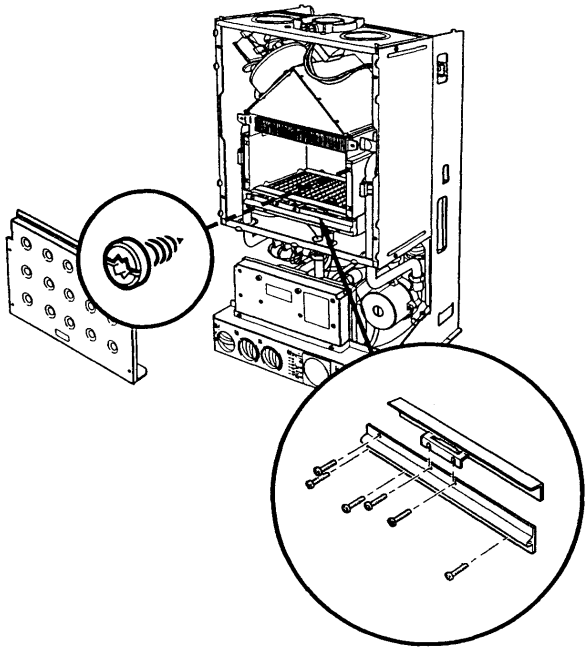

Remove the screws securing the combustion box door.

Remove the door by lifting the lower edge forwards and upwards through 90º.

Draw the door forwards.

Remove the two screws securing the injector manifold to gas inlet pipe.

Remove the remaining four screws securing the manifold to the burner.

Brush any deposits from the injectors. Do not use a pin or wire to clean them.

Carefully brush the heat exchanger fins.

Brush the burner blades and venturis and combustion box clean.

Reassemble in reverse order of dismantling and recommission.

Changing Components – Page 28

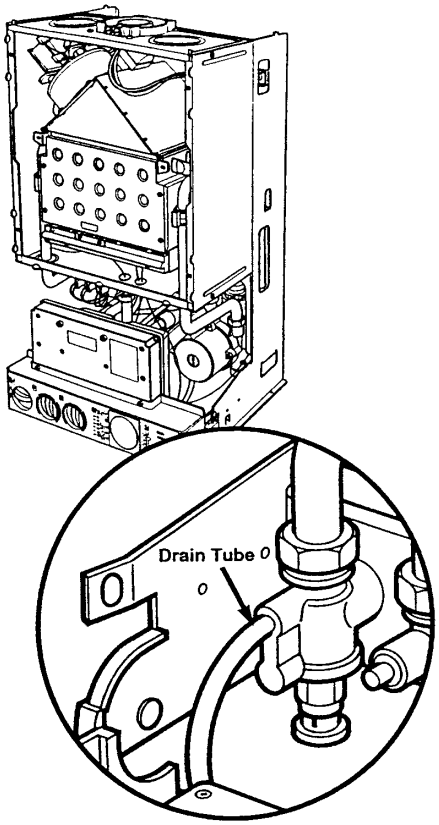

Ensure that both the gas and electrical supplies to the appliance are isolated.

Remove the outer case and door panel as described under “Servicing the Appliance”.

Isolate the water circuits and drain as necessary.
There are five drain points:

1. Central heating flow valve.
2. Domestic hot water outlet elbow.
3. Domestic cold water inlet valve.
4. Under three way valve.
5. Under automatic air vent.

Place tube on drain point to-drain water away from electrics. Turn anticlockwise to open.

NOTE: When reassembling ‘O’ ring joints always place the ‘O’ ring on the spigot

Where appropriate, after changing a component, re-commission the appliance.

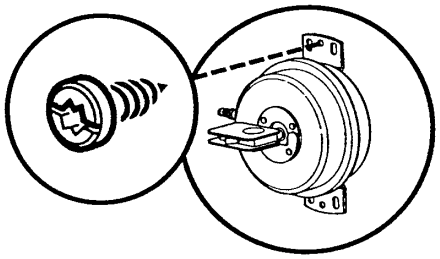

Pressure Switch

Remove the screw holding the pressure switch to the air box back panel.

Draw the switch forwards, and noting the position of the electrical connections and pressure pipes, remove them.

Reassemble. in reverse order. of dismantling, and in accordance with the label on reverse of door panel.

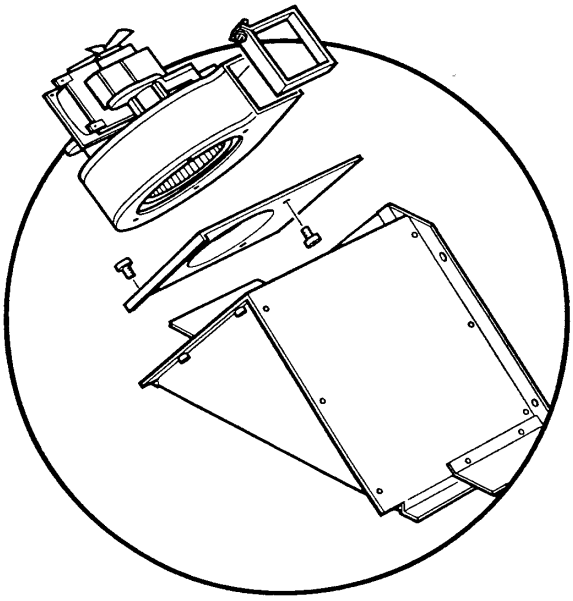

Fan

Slacken the screw securing the fan and elbow seal.

Remove the screws holding the fan sealing plate to the hood, and disengage the fan from the seal.

Draw the fan assembly forwards, and remove the electrical connections. Note the position of the earth wire.

Remove the screws holding the sealing plate to the fan, and remove the plate.

Fit the plate to the new fan, and reassemble in reverse order of dismantling.

CHANGING COMPONENTS – Page 29

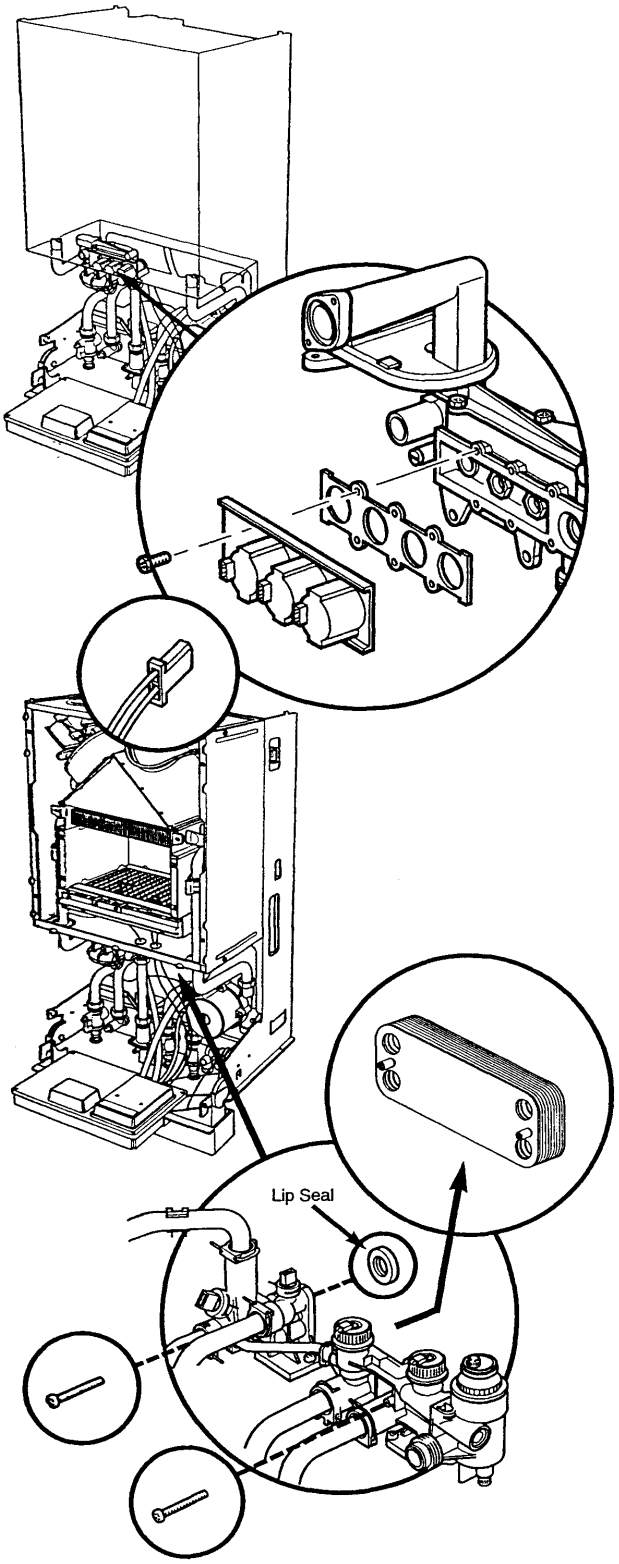

Gas Valve Solenoids

All three solenoids are permanently fixed to the valve cover plate.

Remove the electrical connections, having noted their positions. The wires are colour coded to each solenoid.

Remove the screws holding the plate to the valve body.

Remove the plate and gasket carefully to avoid losing the three valves and springs.

Always fit a new gasket.

Reassemble in reverse order of dismantling.

Domestic Hot Water Heat Exchanger

Hinge down the electrical box.

Undo the screws holding the heat exchanger to the manifolds.

Draw the heat exchanger carefully over the manifolds, ensuring no wires are caught or damaged.

Remove and inspect the four lip seals, replace if necessary.

Replace in reverse order of dismantling, and re-commission, ensuring that the off set location peg on the heat exchanger is to the right.

spares & parts online IBASIS.CO.UK

CHANGING COMPONENTS – Page 30

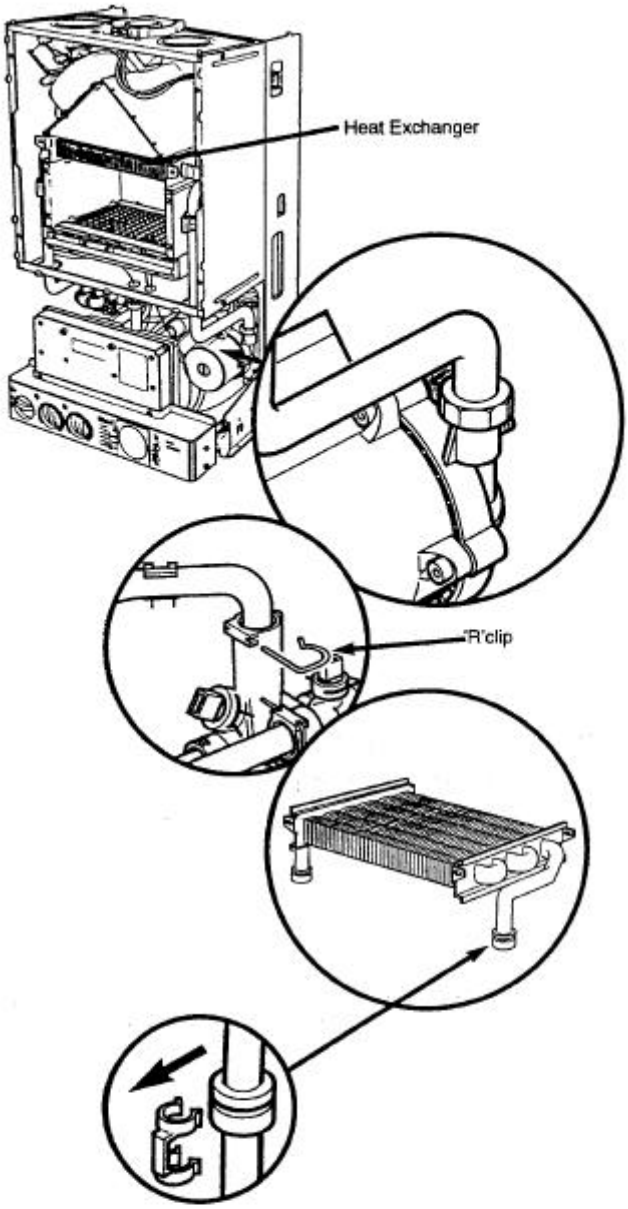

Heat Exchanger

Remove the combustion box door as described under "Servicing the Appliance".

Undo the nut on the return pipe at the pump.

Remove the "R" clip on the flow pipe at the manifold.

Remove the clips securing the flow and return pipes to the heat exchanger.

Ease the flow and .return pipes from the heat exchanger by gently pulling downwards.

Pull the heat exchanger forwards and remove.

Reassemble in reverse order of dismantling, and re-commission.

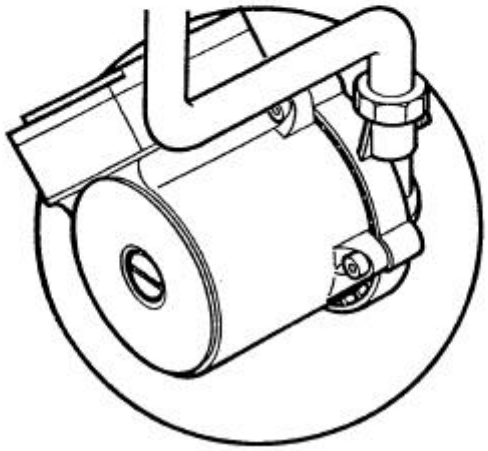

Pump

For ease of replacement fit a new pump head to the existing housing.

A standard Grundfos UPS 15-50 pumphead is interchangeable.

This must be switched to setting 3.

CHANGING COMPONENTS – Page 31

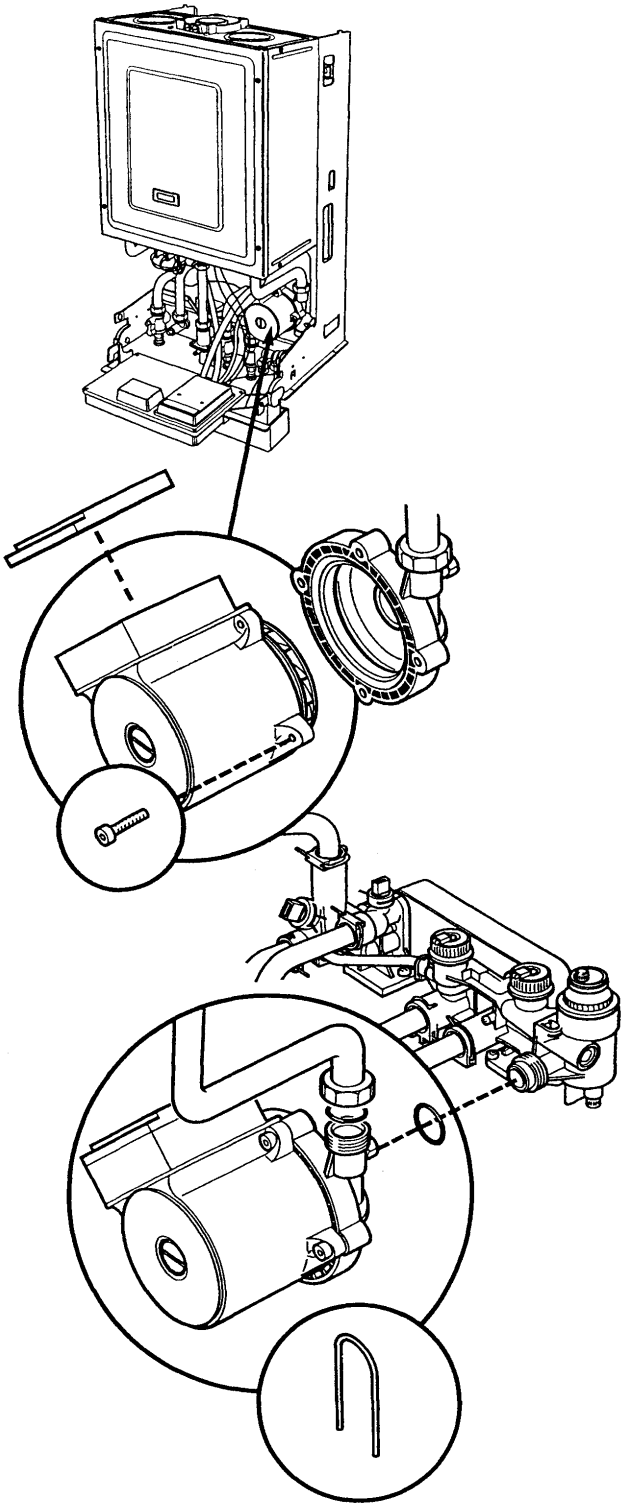

Pump (Head Only)

Hinge down the electrical box.

Remove the screw retaining the pump electrical cover and remove the cover.

Disconnect the wires (L,N,E) and slide out the grommet assembly.

Remove the four socket head screws securing the pump head, and seperate from the housing.

Switch the new pump head to setting No3.

Remove electrical cover and discard.

Assemble new head with electrical box at 10 ‘o’Clock to housing.

Rewire using existing harness and box cover.

CHECK THAT THE PUMP HAS BEEN SWITCHED TO SETTING No 3.

Pump (Complete)

Hinge down the electrical box.

Remove the screw retaining the pump electrical cover, and remove the cover.

Disconnect the wires (L,N,E) and slide out the grommet assembly.

Undo the return pipe nut from the pump body, retain the ‘O’ ring.

From the rear of the pump housing pull up the “U” shaped retaining clip to disengage.

Pull the pump forwards off the manifold spigot and retain the ‘O’ ring.

Reassemble in reverse order of dismantling and re-commission.

CHANGING COMPONENTS – Page 32

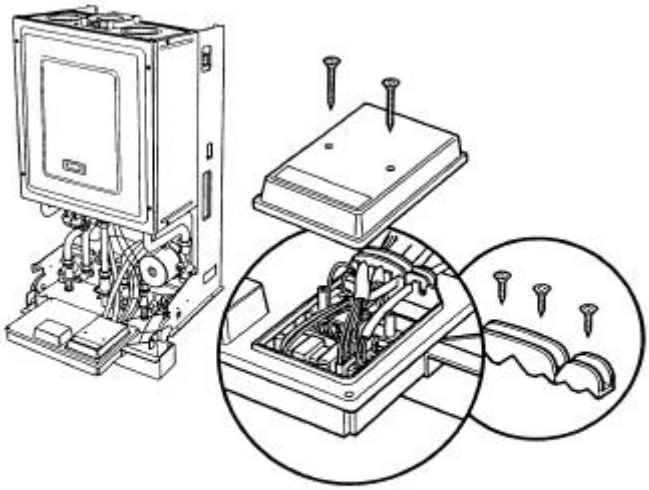

PCB and Spark Generator

Hinge down the electrical box.

Remove the screws and small cover.

Remove the three screws to release the cable clamp.

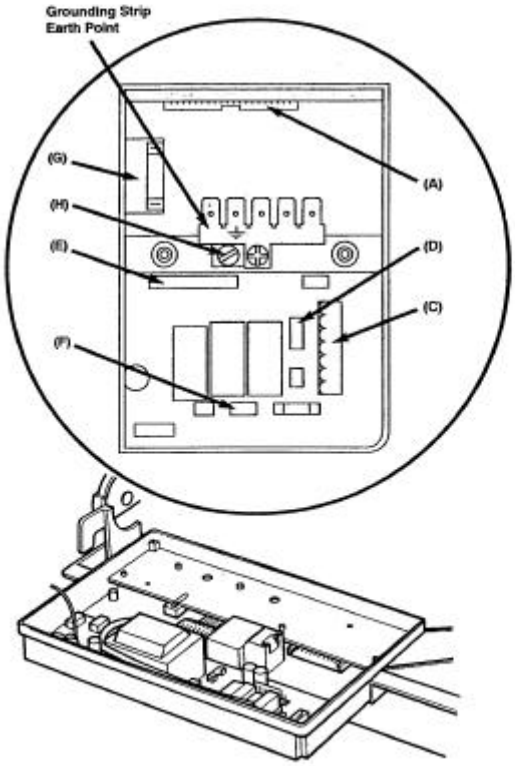

Unplug the multipin connections to the two P.C.B.s as follows:-

1. Mains input plug- (C).
2. Pressure switch & fan - (D).
3. Safety thermostat & sensing electrode - (E).
4. Pump - (F).

Unplug the-two spark electrode leads from the generator - (G).

Remove single screw securing the grounding strip to the large plastic cover -(H).

Disconnect the earth tag going to the power P.C.B.

Unplug multipin connector (18 wire) from the control P.C.B. at (A).

Remove the four screws and large cover panel to expose P.C.B.s.

CHANGING COMPONENTS – Page 33

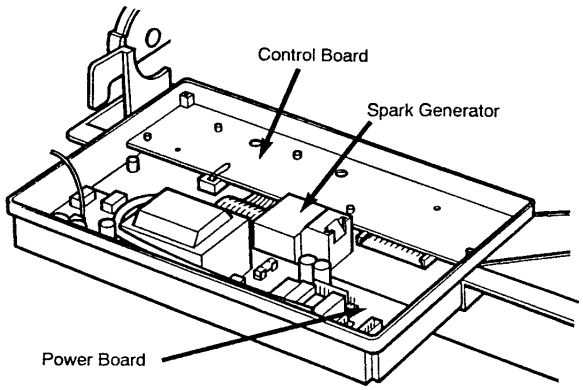

Spark Generator

Disconnect generator lead at connection on power board (K).

Lift power board partially from locating pegs to allow the release of the generator from its locating pins.

Disconnect terminals to L, N & Earth.

Replace spark generator or wiring as necessary.

Reassemble in reverse order.

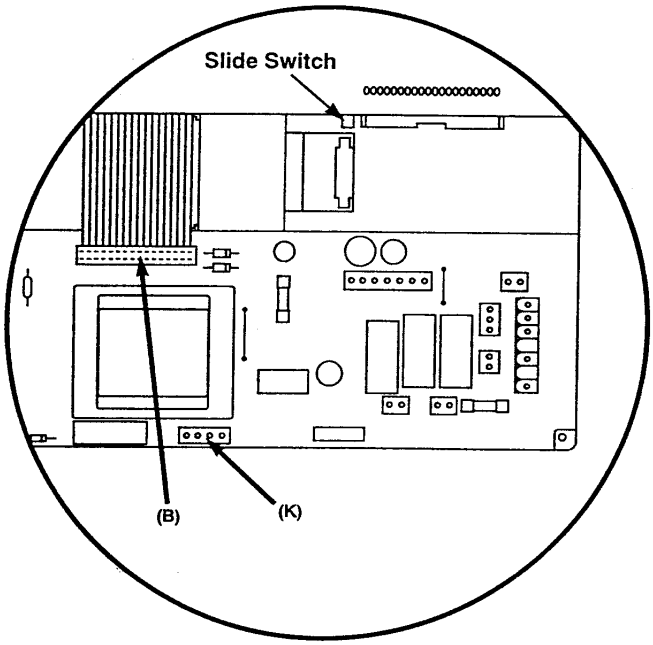

POWER BOARD

Disconnect spark generator lead at connection (K) on power board.

Unplug the link plug connecting the two P.C.B.s at (B).

Lift power board from locating pegs.

Reassemble in reverse order.

CONTROL BOARD

Unplug the link plug connecting the two P.C.B.s at (B).

Remove the three control knobs by pulling off from the spindles.

Lift the control board from the locating pegs.

Replace the new P.C.B. in reverse order of dismantling ensuring the correct location on the pegs.

Ensure the slide switch is in the left hand position.

NOTE: One of the control knobs has a longer locating spindle, this is used on the 'On/Off' selector switch.

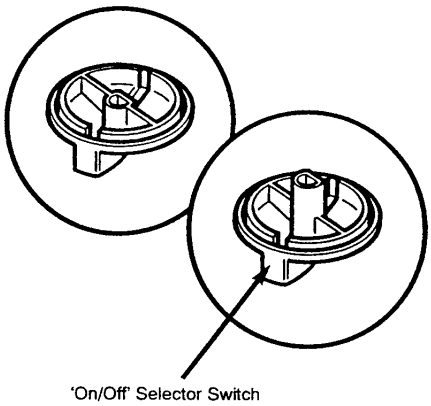

CHANGING COMPONENTS – Page 34

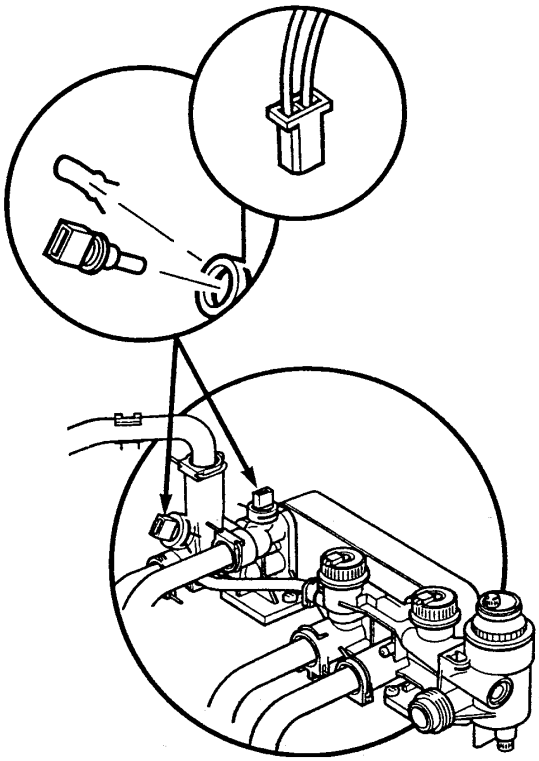

Thermistors

The procedure is the same for both domestic hot water and central heating thermistors.

Remove the electrical connection from the thermistor.

Remove the spring clip retaining it to the manifold.

Withdraw the thermistor.

Reassemble in reverse order.

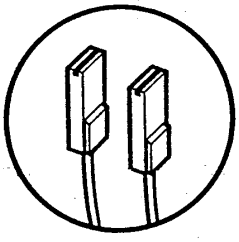

Safety Thermostat

Remove the electrical connections from the sensor.

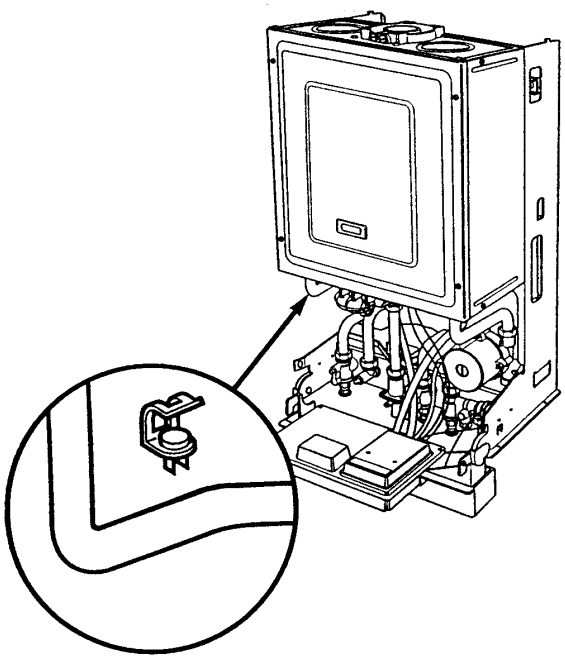

Remove the retaining clip from the flow pipe.

Remove the sensor from the clip.

Apply heat transfer paste and reassemble in reverse order.

CHANGING COMPONENTS – Page 35

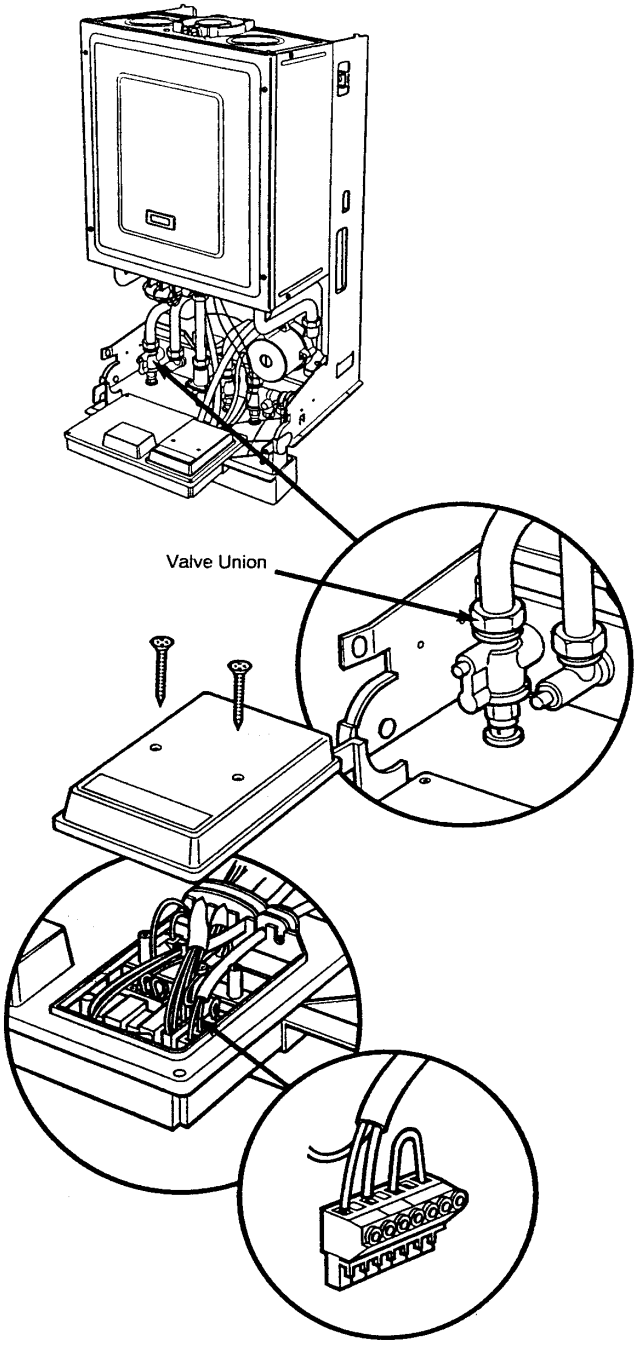

Expansion Vessel

Hinge down the electrical box.

Turn off gas tap and close all water valves.

Drain as necessary.

Undo all unions between the boiler and isolating valves, retaining the sealing washers.

Remove the electrical cover, and unplug the input lead.

Remove the earth connection from the grounding strip.

Release the input cables from the cable clamp.

Remove the screws holding the flue elbow to the boiler.

Slacken the screws on the flue clip, and slide the clip along the air duct.

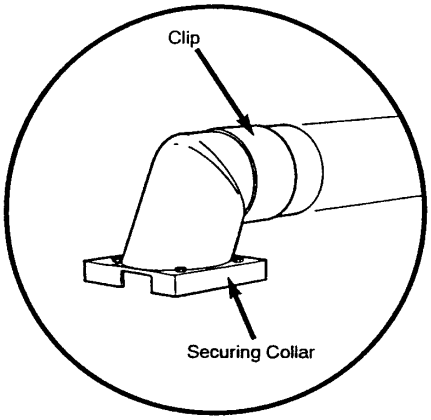

Slide the rubber seal off the elbow and onto the air duct.

Ease the elbow upwards.

Remove elbow and securing collar.

CHANGING COMPONENTS – Page 36

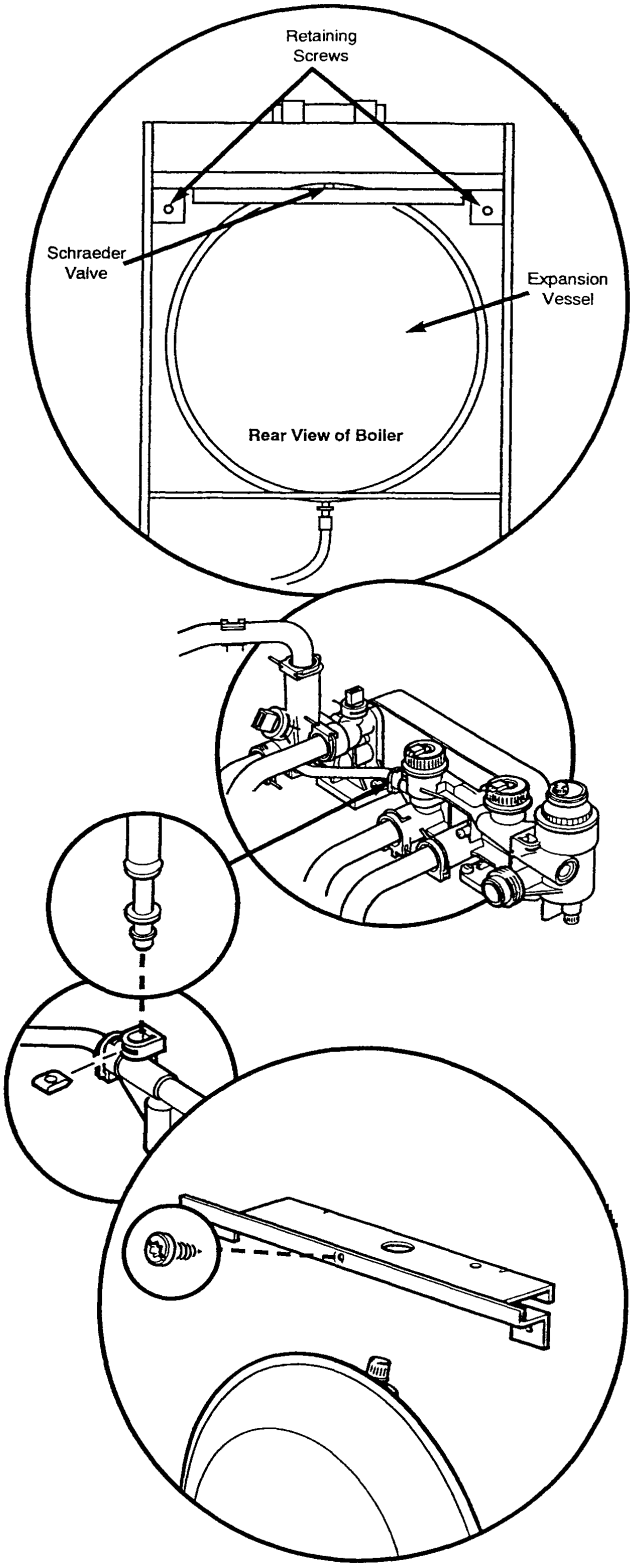

Remove the boiler from the wall by lifting to unhook then remove from the lower support bracket.

Stand the boiler on its base and undo the two screws holding the vessel retaining bracket to the chassis.

Remove the clip retaining the braided expansion tube to the manifold.

Lift the vessel away from the boiler.

Undo the screw holding the retaining bracket to the expansion vessel.

Reassemble in reverse order, ensuring that the vessel flange sits in the slot in the chassis.

RE-PRESSURISING EXPANSION VESSEL

The charge pressure = 0.7 bar.

Close central heating flow and return isolating valves.

Drain down the boiler.

The ‘Schraeder’ valve is positioned on the top retaining bracket.

Pressurise to 0.7 bar.

Open isolating valves and re-charge the system to 1.0 bar. Vent system as necessary.

CHANGING COMPONENTS – Page 37

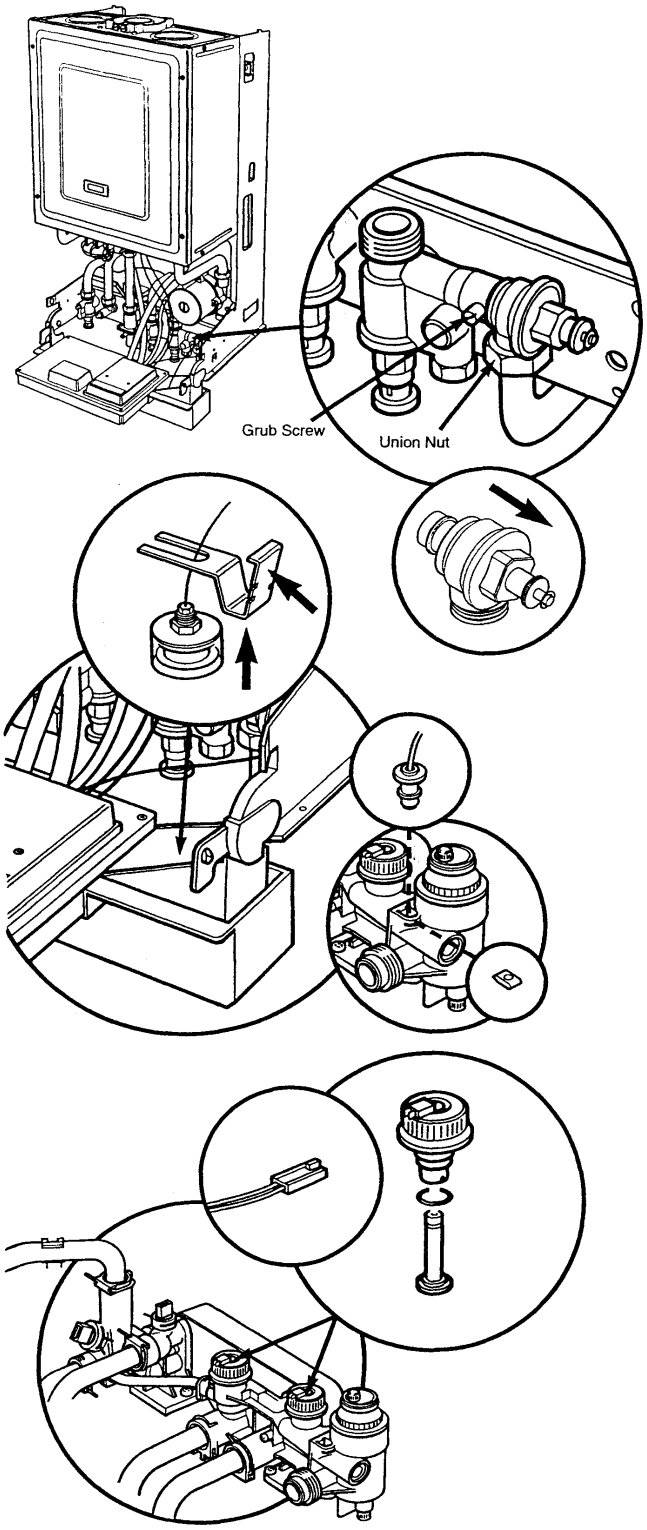

Pressure Relief Valve

Close all water valves and drain as necessary.

Disconnect the union between the valve and the discharge pipe. -

Slacken the grub screw retaining the valve.

Pull the valve sideways to disengage it.

Reassemble in reverse order.

Pressure Gauge

Hinge down the electrical box.

Remove the spring fork clip retaining the gauge to the facia, and withdraw the gauge.

Remove the clip retaining the capillary to the manifold.

Reassemble in reverse order.

Flow Switches

The procedure for changing both flow switches is the same

They are interchangeable.

Remove the electrical connection.

Unscrew the switch cap assembly, and remove the “O’ ring. The cap is hand tight so no tool is necessary.

Reassemble in reverse order.

CHANGING COMPONENTS – Page 38

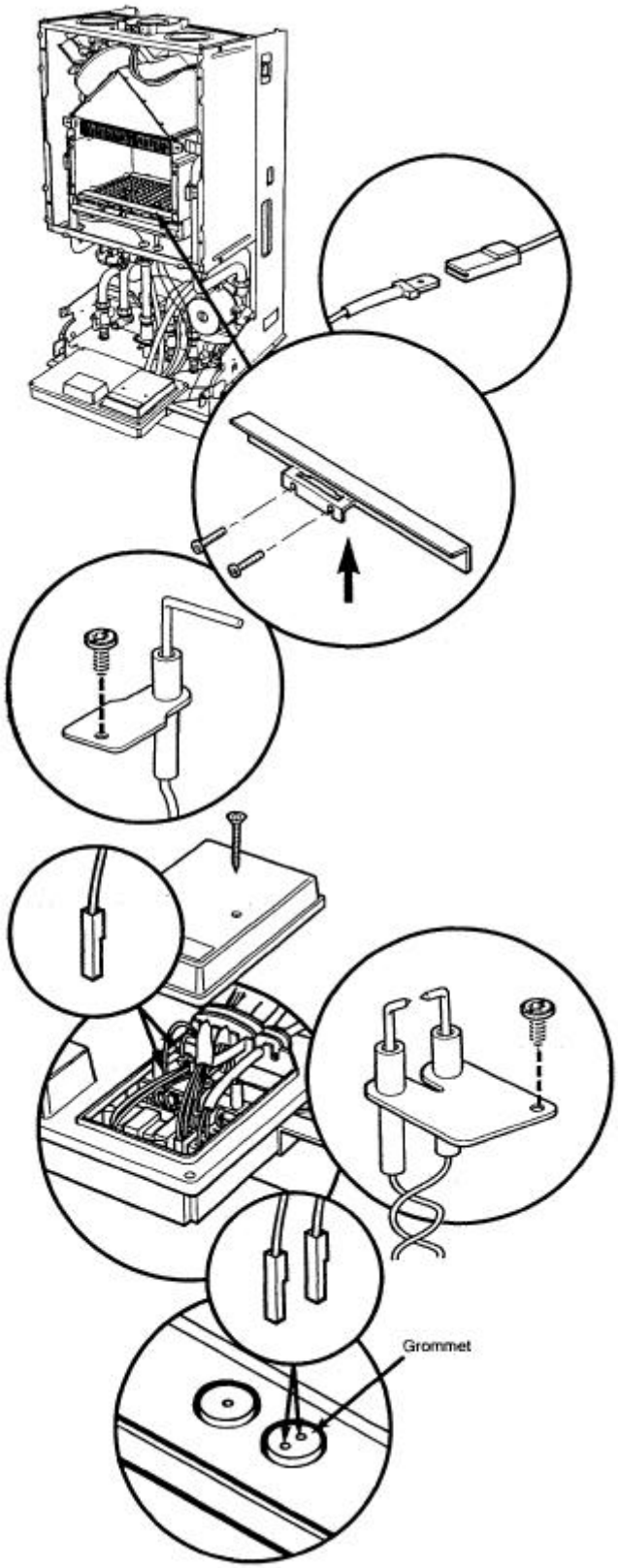

Flame Sensing Probe

Remove combustion box door, and hinge down electrical box.

Disconnect the sensor lead from the main wiring loom (in line amp tag).

Pull the lead through the grommet in the combustion box lower panel.

Slacken the screws holding the burner flange, and remove the flange.

Remove the screw securing the probe to the burner.

Remove assembly from the burner by rotating forwards.

Lift out and thread lead between burner blades.

Reassemble in reverse order.

Spark Electrode

Remove the combustion box door and hinge down the electrical box.

Slacken the screws holding the burner flange, and remove the flange.

Remove the screw securing the electrode to the burner.

Remove the screws and small electrical cover.

Release the cable clamp.

Disconnect both leads from the spark generator and feed through the cable clamp and cable tie on the main harness.

Untwist the two leads.

Remove the grommet in the combustion box lower panel, slide the two leads and connections through the grommet.

Remove assembly from the burner by rotating forwards.

Lift out and thread the leads between burner blades.

Reassemble in reverse order.

It is important that the two leads are twisted together a minimum of 8 times before feeding through the cable tie and clamp.

This requirement is to ensure that compatibility with the electromagnetic directive is maintained.

CHANGING COMPONENTS – Page 39

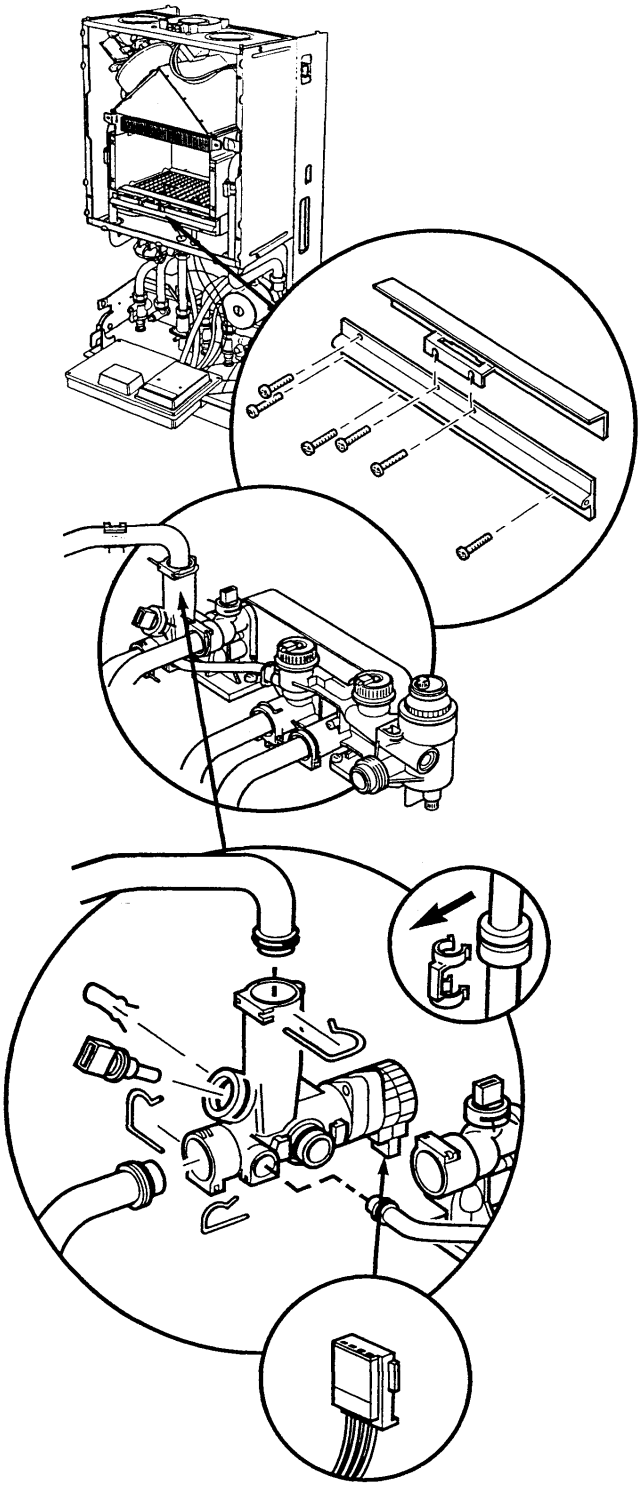

Injector Manifold

Remove the combustion box door.

Remove the six screws holding the manifold to the burner and inlet pipe.

Remove the burner flange and draw the manifold forwards.

Reassemble in reverse order.

3 - Way Valve

Close central heating isolating valves and drain down.

Release union nut and remove ‘R’ clip on central heating outlet pipe.

Pull forward to disengage pipe spigot.

Remove ‘R’ clip securing the by pass pipe to the valve.

Pull out the spring clip and unplug the thermistor and electrical connection.

Remove the clip securing the flow pipe to the heat exchanger and the ‘R’ clip holding it to the valve.

Disengage the flow pipe at the heat exchanger end by easing down, so that the lower end of the pipe slides further into the valve spigot

Pull pipe upwards to disengage from valve spigot.

Rotate the front end of the valve upwards by ¼ turn to disengage the bayonet fitting.

Ease the assembly to the left to separate the spigot from the manifold.

Bring the valve assembly forward and unplug the electrical connection.

Reassemble in reverse order ensuring all ‘O’ rings are on the spigots before assembly.

spares & parts online IBASIS.CO.UK

CHANGING COMPONENTS – Page 40

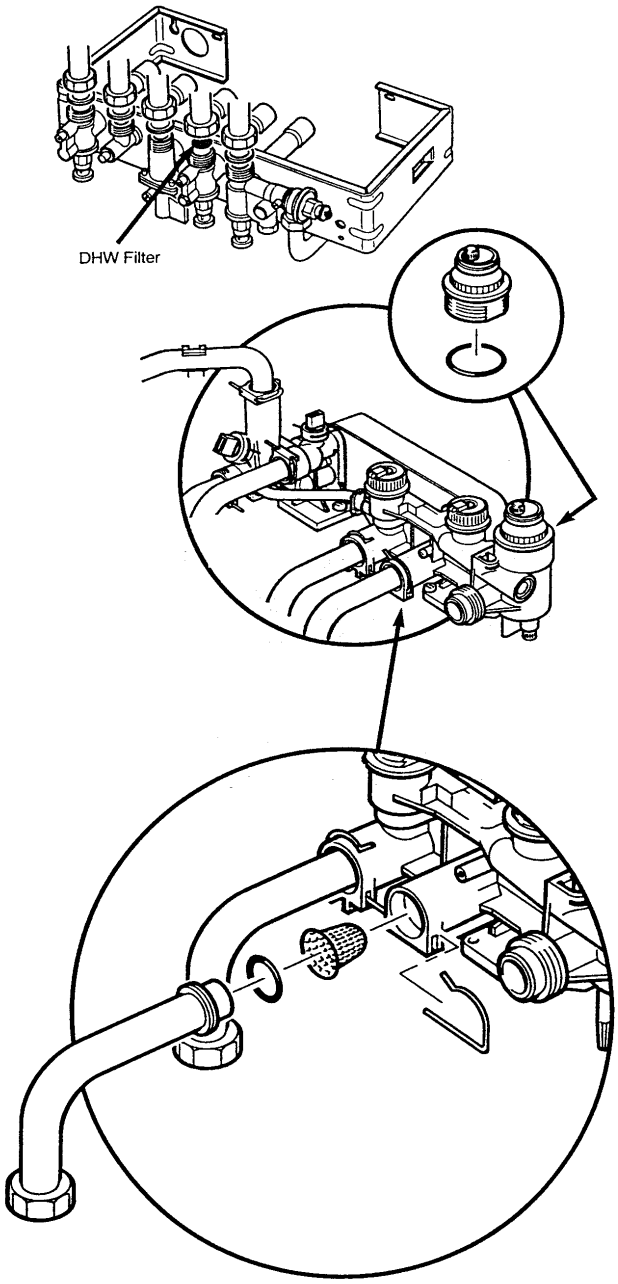

Domestic Hot Water Filter

Undo the nut on the DHW inlet bend.

Swivel the bend to gain access to the flat filter.

AUTOMATIC AIR VENT

Unscrew the air separator head assembly.

Replace unit in reverse order.

Central Heating Filter

Undo the nut on the central heating return bend.

Remove the 'R' clip on the connection at the manifold and remove the filter.

Clean or replace filter/s as necessary.

Reassemble in reverse order.

CHANGING COMPONENTS – Page 41

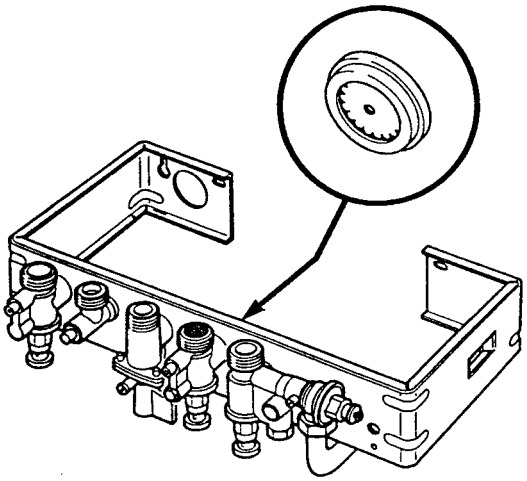

Flow Regulator

To remove the flow regulator use a small screwdriver to lever the plastic housing out of the valve inlet.

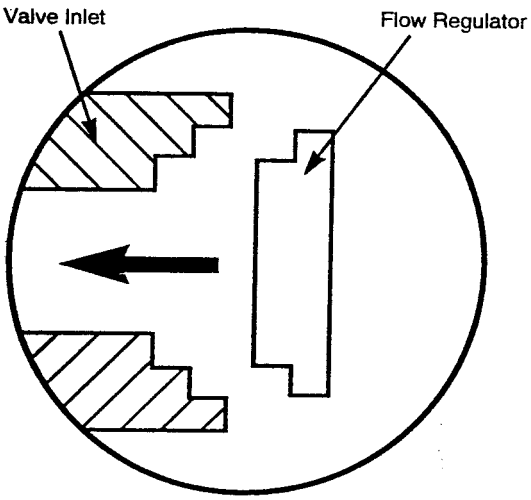

Fit the replacement regulator ensuring it is inserted in the direction shown.

Regulator Colour	Nominal Flow Litre/Min	Baxi Part No.
Blue	10	235948
Red	12	237473
Green	7	237316

spares & parts online
IBASIS.CO.UK

)perational Flow Chart – Page 42 - 43

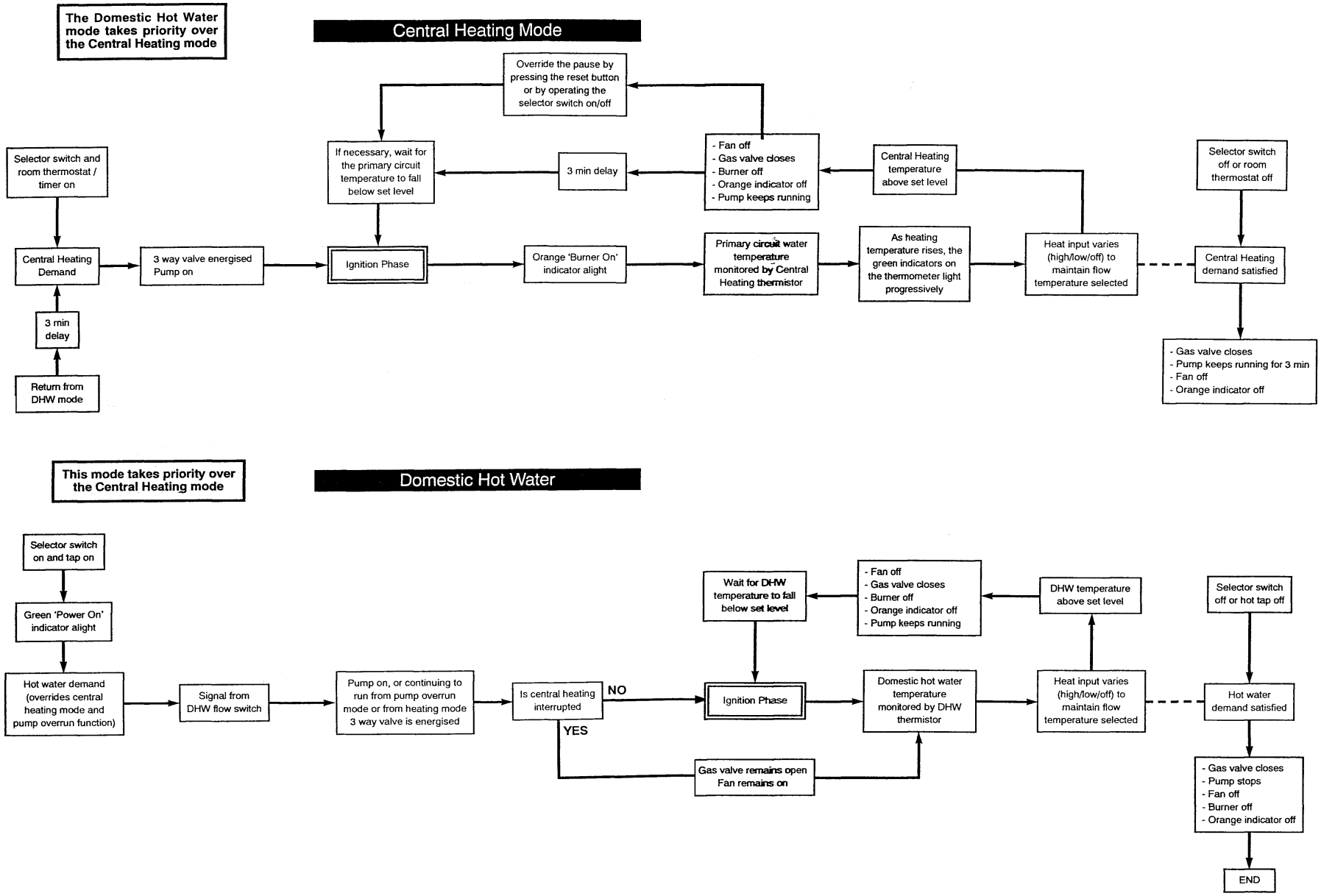

)perational Flow Chart – Page 44 - 45

Ignition Phase

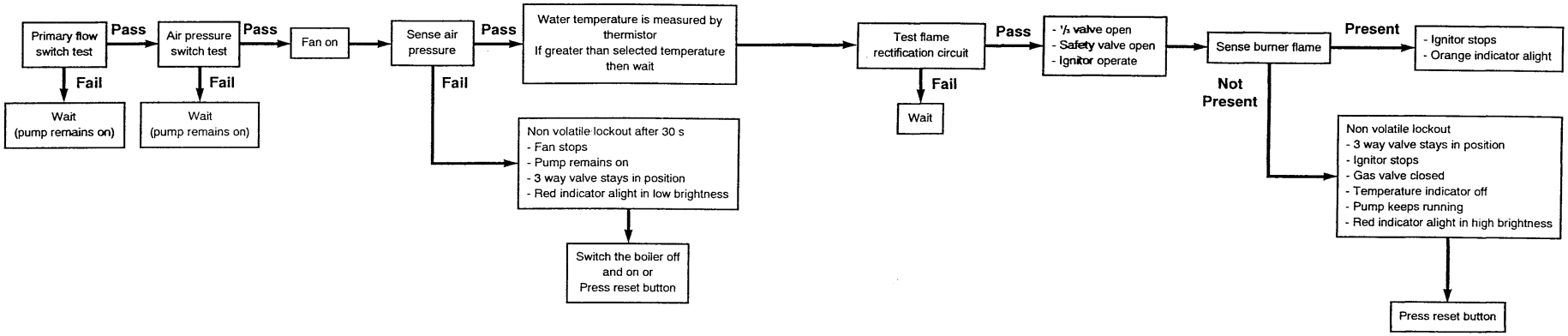

Overheat Lockout Procedure

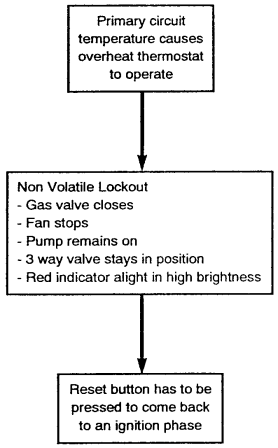

spares & parts online
IBASIS.CO.UK®

Fault Finding – Page 46

Please Check Following Points Before Going Through The Fault Finding Chart.

- Check electrical system earth continuity, short circuit, resistance to earth, fuse failure and a minimum voltage of 180 is present.
- There is an adequate gas supply pressure at the inlet, (preferred minimum pressure is natural gas 19.5 mbar, propane 36 mbar & butane 27 mbar).
- All isolating valves are open and both boiler and system are vented.
- Check central heating system is correctly pressurised (minimum cold pressure 0.7 bar).
- Check installation is correct including the flue system.

Note: During Fault Finding, where necessary, timing delays can be cancelled by pressing the reset button.

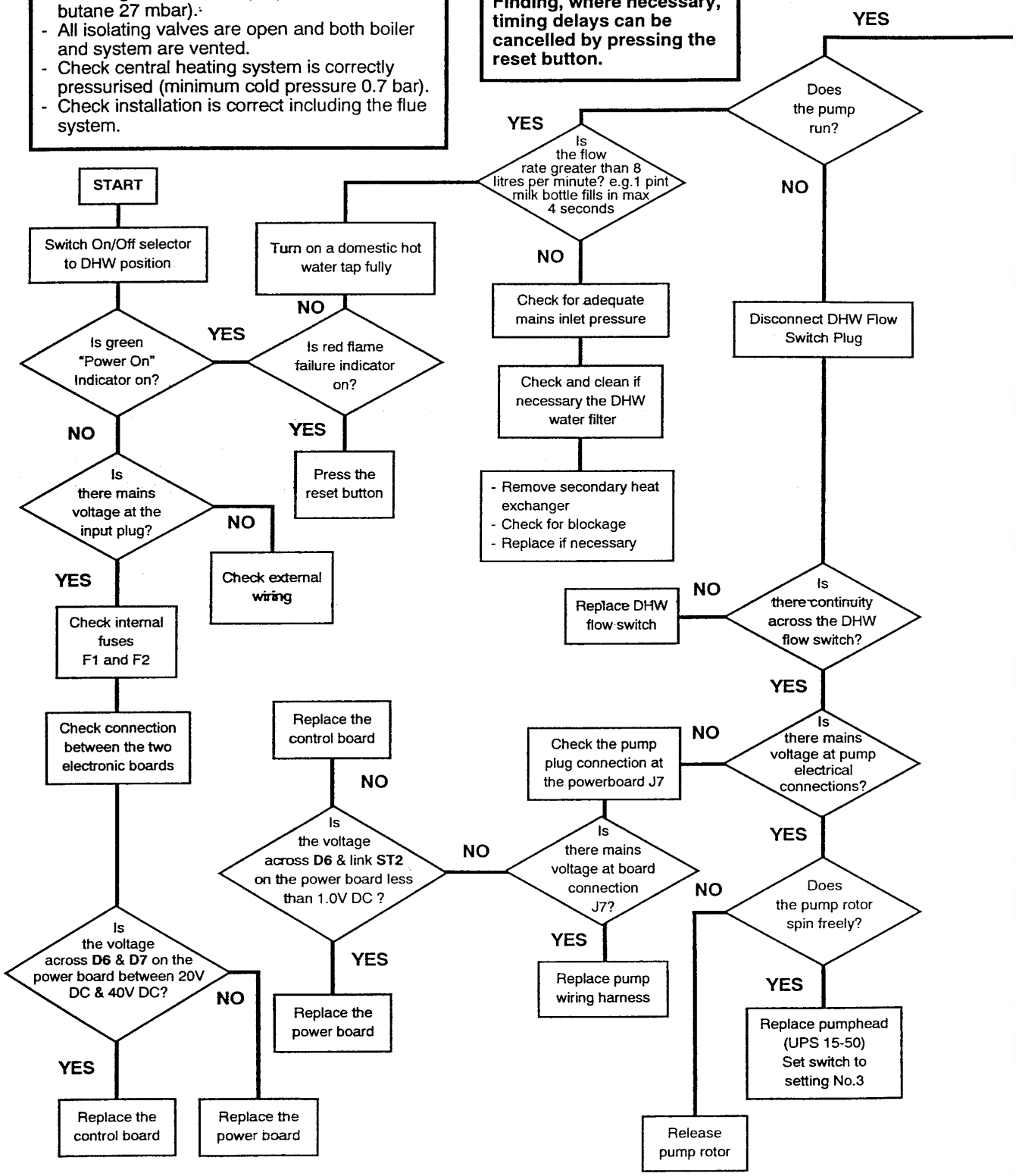

FAULT FINDING – Page 47

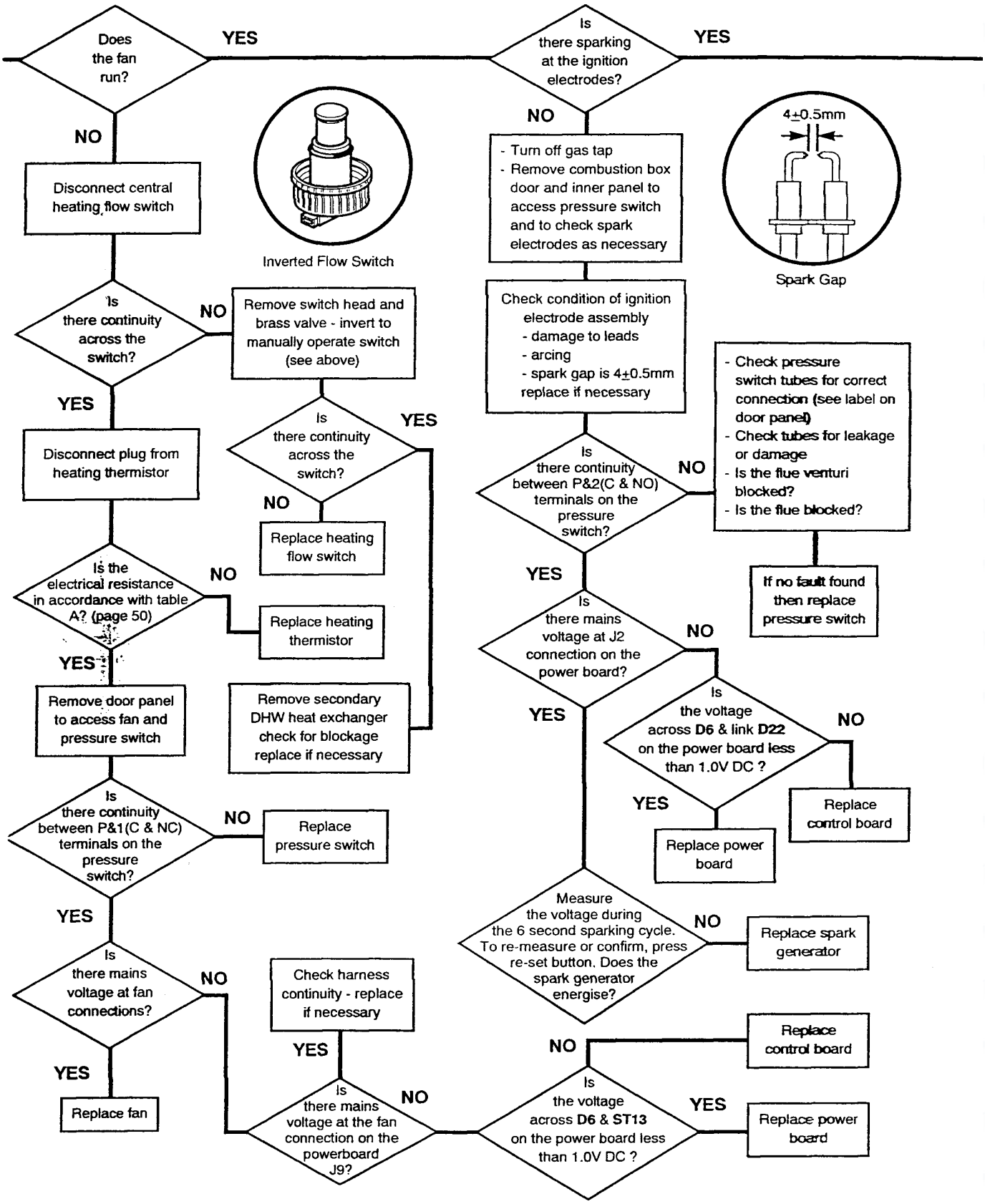

FAULT FINDING – Page 48

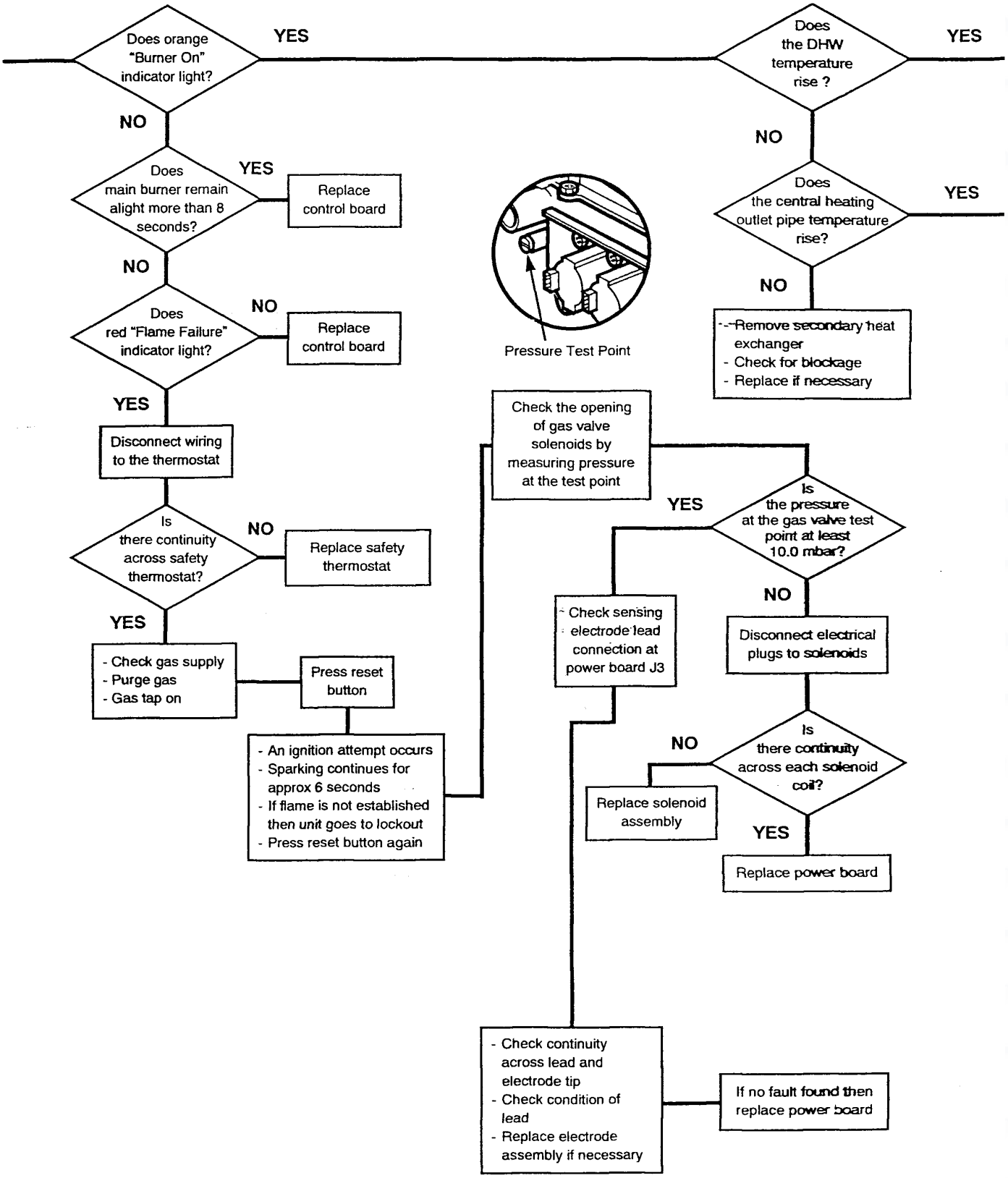

FAULT FINDING – Page 49

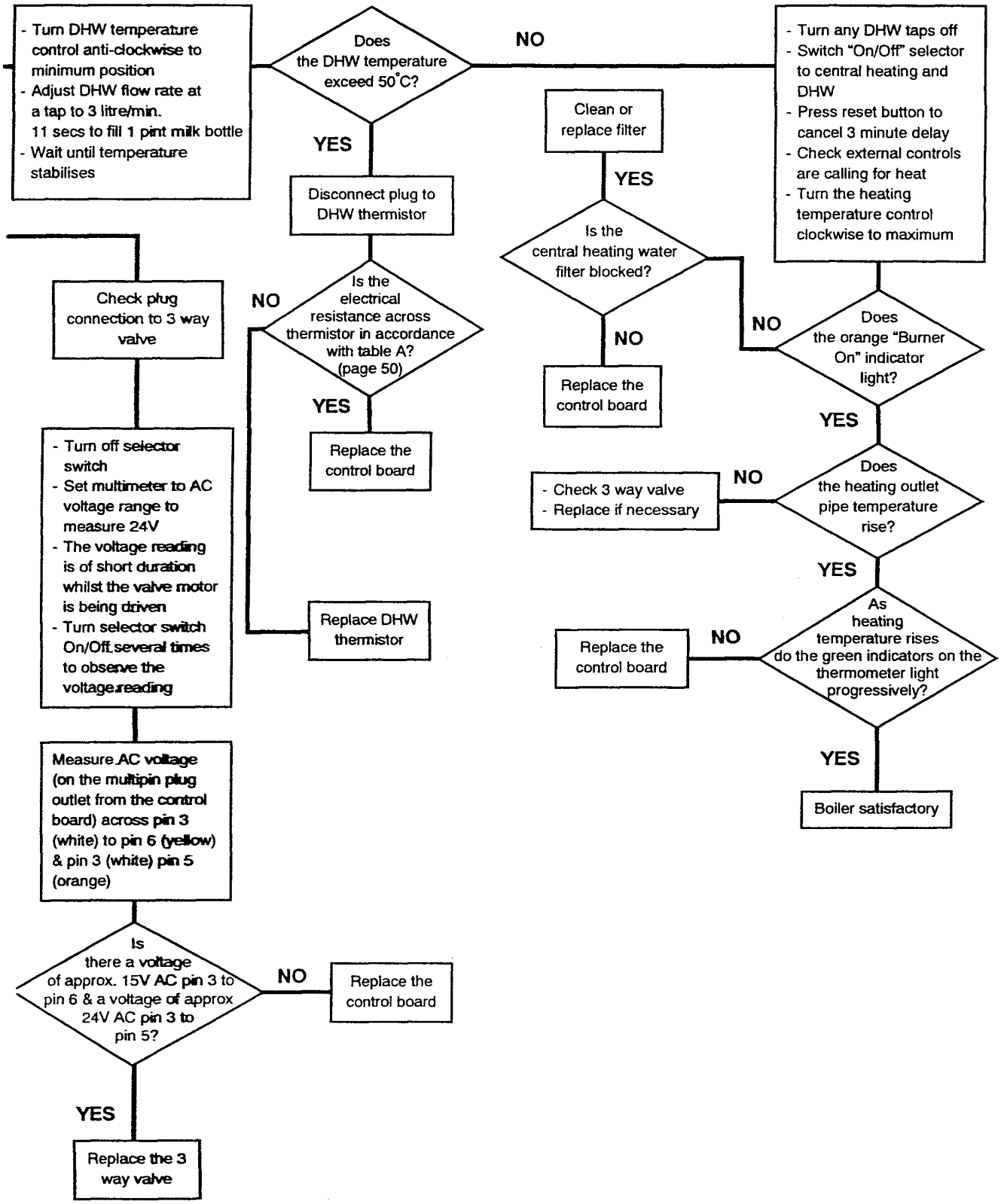

Electronic Board Detail – Page 50

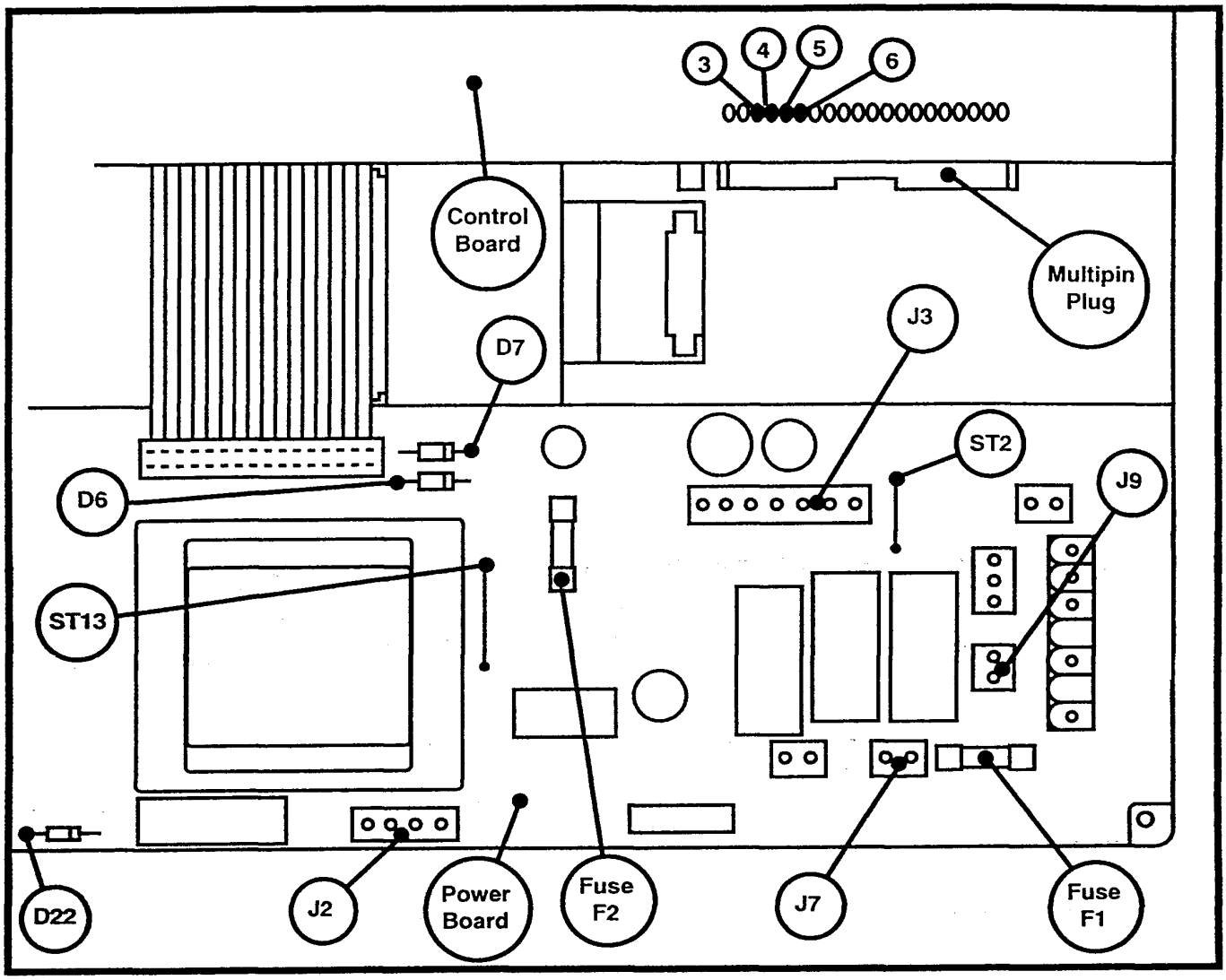

Point of Measurement

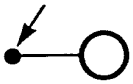

Symbols indicate point of electrical measurement during fault finding

Table A

Thermistor Resistance	
Electrical Resistance Ohm	Water Temperature °C
9950	10
9050	12
7860	15
6250	20
2660	40
1240	60
630	80

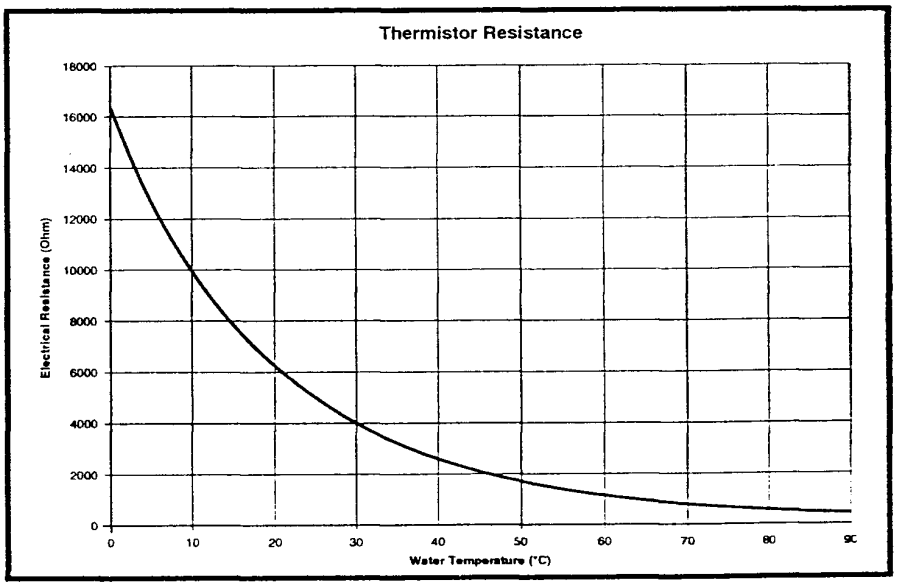

Short Parts List – Page 51

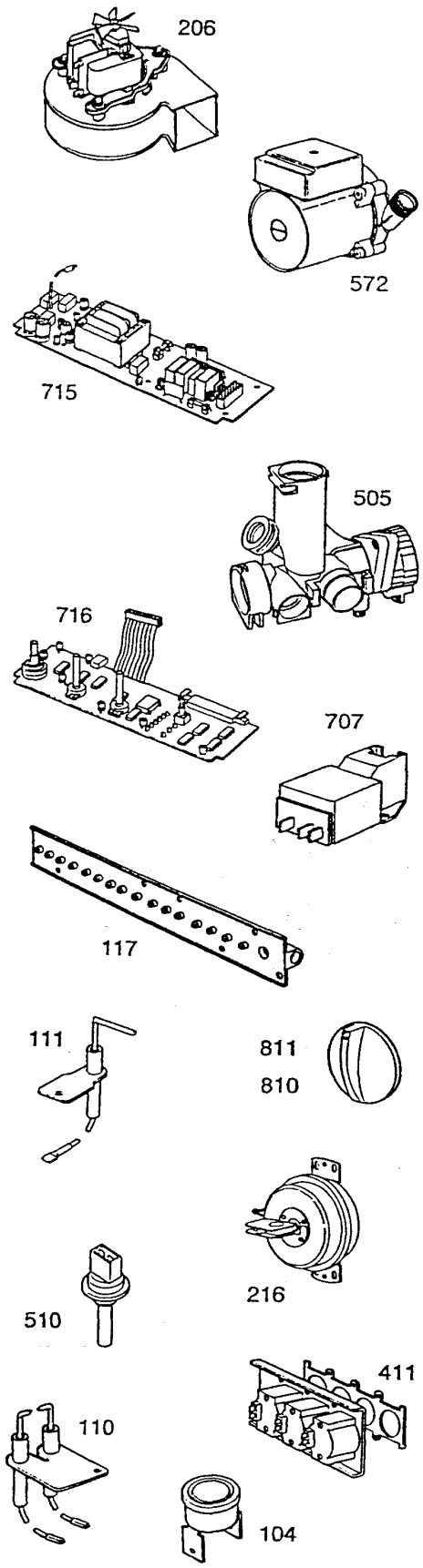

Key	Description	G.C. No	Manuf'rs Part No
206	Fan Assembly (80)	277 804	235799
572	Pump	277 862	235878
615	Power Board	277 880	235907
505	3-Way Valve	277 833	235838
616	control Board	277 881	235908
607	Spark Generator	379 075	235899
117	Injector Manifold - NG (80)	277 795	235791
117	Injector Manifold - LPG (80)	277 794	235790
111	Flame Sensing Electrode	277 789	235785
811	control Knob,	277 896	235920
810	control Knob - Extended	277 899	236462
216	Pressure Switch	277 808	235804
510	Thermistor	277 834	235840
411	Solenoid Valve Assembly	277 812	235831
110	Ignition Electrode Assembly	277 788	235784
104	Safety Thermostat	277 78.3	235779
206	Fan Assembly (96)	170 621	237465
117	Injector Manifold - NG(96)	170 619	237467
117	Injector Manifold - LPG (96)	170 620	237468

Click here for Helplines