Please leave these instructions with the user

Baxi Solo 2 RS Range

Wall Mounted Room Sealed
Gas Fired Central Heating Boilers

Comp Nº 232184 . Iss 11 . 6/00

Installation and Servicing Instructions

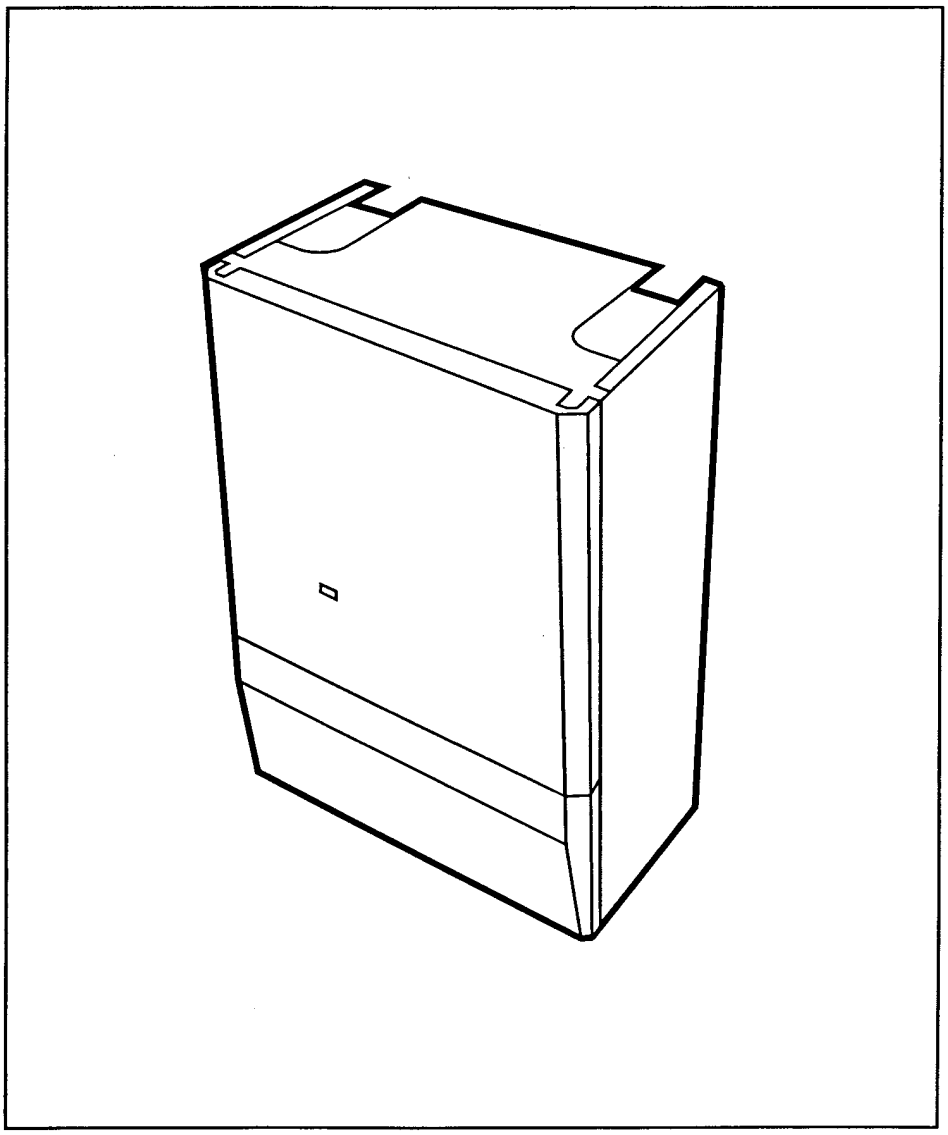

BAXI

spares & parts online IBASIS.CO.UK

Natural Gas

Baxi Solo 2 60 RS
G.C. No. 41 077 79

Baxi Solo 2 50 RS
G.C.No. 41 077 78

Baxi Solo 2 40 RS
G.C.No. 41 077 77

Baxi Solo 2 30 RS
G.C. No. 41 077 76

Baxi UK Limited is one of the leading manufacturers of domestic heating products in the U.K.

Our first priority is to give a high quality service to our customers. Quality is built into every Baxi product - products which fulfil the demands and needs of customers, offering choice, efficiency and reliability.

To keep ahead of changing trends, we have made a commitment to develop new ideas using the latest technology - with the aim of continuing to make the products that customers want to buy.

Baxi is also the largest manufacturing partnership in the country. Everyone who works at the company has a commitment to quality because, as shareholders, we know that satisfied customers mean continued success.

We hope you get a satisfactory service from Baxi. If not, please let us know.

Baxi is a BS-EN ISO 9001
Accredited Company

Contents - Page 4

Introduction	**PAGE 5**
Technical Data	**PAGE 6 - 7**
System Details (and By-pass Requirements)	**PAGE 8 - 11** Water Circulating Systems System Controls Pipework Fully Pumped, Open Vented Systems Low Head Installation Sealed Systems Gravity Systems Hydraulic Charts
Site Requirement	**PAGE 12 - 14** Location Clearances Flue Position Flue Dimensions Ventilation of Compartments Gas Supply Electrical Supply
Installation	**PAGE 15 - 25** Initial Preparation Flue Preparation Fitting the Wall Mounting Plate Fitting the Flue Duct Terminal Guard Fitting a Terminal Guard Fitting the Boiler Water Connections Pipe Routes Fully Pumped System Sealed System Gravity Hot Water System Gas Connection Electrical Supply
Commissioning the Appliance	**PAGE 26 - 27**
Fitting the Outer Case	**PAGE 28**
Overheat Cut-Off Device	**PAGE 29**
Annual Servicing	**PAGE 30 - 32** Dismantling the Boiler Cleaning the Burner/Injectors Cleaning the Combustion Box
Changing Components	**PAGE 33 - 40** Eco Interrupter Leads Piezo Igniter Solenoid Operator Thermocouple Spark Electrode & Lead Pilot Injector Pilot Bracket & Gasket Overheat Thermostat Main Thermostat Pump Overrun Timer Removal of Combustion Chamber Door Burner and Injectors Gas Valve Insulation Panels
Fault Finding	**PAGE 41**
Short Parts List	**PAGE 42**

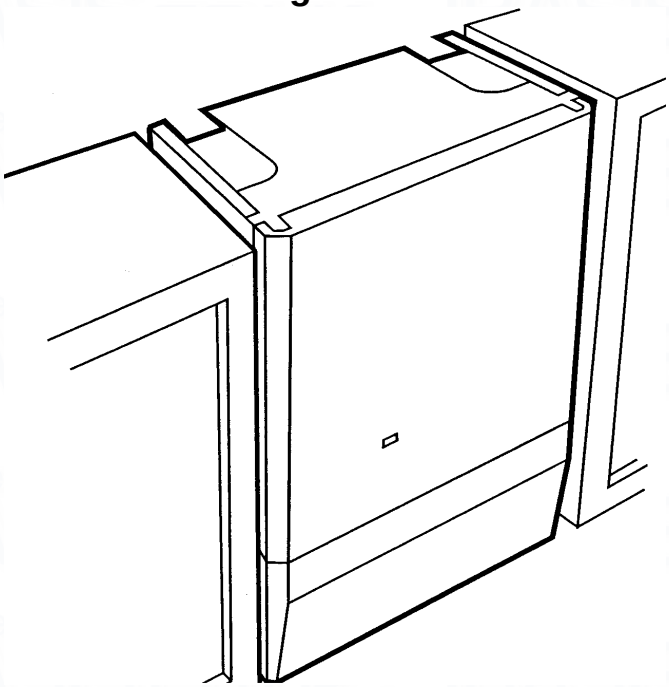

"Benchmark" Log Book

As part of the industry-wide "Benchmark" initiative all Baxi boilers now include an Installation, Commissioning and Service Record Log Book. Please read the Log Book carefully and complete all sections relevant to the appliance and installation. These include sections on the type of controls employed, flushing the system, burner operating pressure etc. The details of the Log Book will be required in the event of any warranty work. Also, there is a section to be completed at each subsequent regular service visit.

B.S. Codes of Practice

STANDARD	SCOPE
BS 6891	Gas Installation.
BS 5546	Installation of hot water supplies for domestic purposes.
BS 5449 Part 1	Forced circulation hot water systems.
BS 6798	Installation of gas fired hot water boilers.
BS 5440 Part 1	Flues.
BS 5440 Part 2	Air Supply.

WARNING
The addition of anything that may interfere with the normal operation of the appliance (e.g. FLUE DAMPERS, ECONOMISERS etc) without the express written permission of BAXI could invalidate the appliance warranty and infringe the GAS SAFETY (Installation and Use) REGULATIONS.

Description

The Baxi Solo 2 RS is a wall mounted gas fired room sealed natural draught central heating boiler with range rated outputs as shown in the table below.

	HEAT OUTPUT	
Model	Min	Max
30	6.15kW (21,000 Btu/h)	8.79kW (30,000 Btu/h)
40	9.09kW (31,000 Btu/h)	11.72kW (40,000 Btu/h)
50	12.02kW (41,000 Btu/h)	14.65kW (50,000 Btu/h)
60	14.95kW (51,000 Btu/h)	17.58kW (60,000 Btu/h)

Each appliance is preset at its MAXIMUM heat input rating and is designed for use on NATURAL GAS only. They are suitable for gravity domestic hot water with pumped central heating, fully pumped open vented central heating and domestic hot water and sealed systems.

The standard flue assembly supplied is suitable for wall thicknesses between 100mm (4in) and 356mm (14in). An optional flue extension kit is available for walls of 356mm (14in) and 610mm (24in) thickness.

The appliance data badge is fitted to the combustion chamber door above the gas valve.

Installation

The installation must be carried out by a CORGI Registered Installer and be in accordance with the relevant requirements of GAS SAFETY (Installation and Use) REGULATIONS, the BUILDING REGULATIONS (Scotland) (Consolidation), the LOCAL BUILDING REGULATIONS, the current I.E.E. WIRING REGULATIONS and the bye laws of the LOCAL WATER UNDERTAKING. (Where no specific instruction is given reference should be made to the relevant BRITISH STANDARD CODES OF PRACTICE.)

Important Information

This product contains Refractory Ceramic Fibres (R.C.F.) which are man-made vitreous silicate fibres. Excessive exposure to these materials may cause temporary irritation to eyes, skin and respiratory tract. Care must be taken when handling these articles to ensure the release of dust or fibres is kept to a minimum. To ensure that the release of fibres from these articles is kept to a minimum, during installation and servicing it is recommended that a H.E.P.A. filtered vacuum is used to remove any dust, soot or other debris accumulated in and around the appliance. This should be performed before and after working on the installation. It is recommended that any replaced item(s) are not broken up but sealed within heavy duty polythene bags and clearly labelled "R.C.F. waste". This is not classified as "hazardous waste" and may be disposed of at a tipping site licensed for the disposal of industrial waste. Protective clothing is not required when handling these articles but it is recommended that gloves are worn and the normal hygiene rules of not smoking, eating or drinking in the work area are followed and always wash hands before eating or drinking.

30 RS

Heat Input	Max	Min
kW	11.00	7.69
Btu/h	37,500	26,250

Heat Output	Max	Min
kW	8.79	6.15
Btu/h	30,000	21,000

Burner Pressure	Max	Min
mbar	15.4 ± 0.5	8.0 ± 0.5
in wg	6.2 ± 0.2	3.2 ± 0.2

Gas Connection	RC½ (½in BSPT)
Electrical Supply	230V~50Hz fused 3A
Controls	on/off boiler thermostat with pilot/thermocouple cut out/overheat thermostat on fully pumped applications only
Connections	2 x 22mm and a kit for gravity

Lifting Weight	37.3 kg (82.1 lbs)	
Water Content	2.1 litres (0.46 gals)	
Static Head	Max	Min
metres	30	1
feet	100	3.25
Low Head	Min 0.15m (6in)	
System Design	gravity hot water fully pumped open vented and sealed systems	
Heat Exchanger	cast iron monobloc	
Gas Rate (after 10 mins)	1.05m³/h (37.0ft³/h)	
Outercase Dimensions	Height	600mm
	Width	420mm
	Depth	287mm
Flue Terminal Dimensions	Height	208mm
	Width	293mm
	Depth	173mm

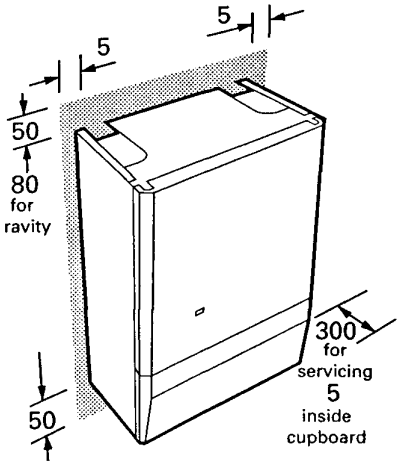

Clearances

NOTE: On gravity applications a clearance of 80mm (3⅛in) is required from the top panel

40RS

Heat Input	Max	Min
kW	14.65	11.36
Btu/h	50,000	38,750

Heat Output	Max	Min
kW	11.72	9.09
Btu/h	40,000	31,000

Burner Pressure	Max	Min
mbar	16.3 ± 0.5	10.3 ± 0.5
in wg	6.5 ± 0.2	4.1 ± 0.2

Gas Connection	RC½ (½in BSPT)
Electrical Supply	230V~50Hz fused 3A
Controls	on/off boiler thermostat with pilot/thermocouple cut out/overheat thermostat on fully pumped applications only
Connections	2 x 22mm and a kit for gravity

Lifting Weight	37.3 kg (82.1 lbs)	
Water Content	2.1 litres (0.46 gals)	
Static Head	Max	Min
metres	30	1
feet	100	3.25
Low Head	Min 0.15m (6in)	
System Design	gravity hot water fully pumped open vented and sealed systems	
Heat Exchanger	cast iron monobloc	
Gas Rate (after 10 mins)	1.40m³/h (49.3ft³/h)	
Outercase Dimensions	Height	600mm
	Width	420mm
	Depth	287mm
Flue Terminal Dimensions	Height	208mm
	Width	293mm
	Depth	173mm

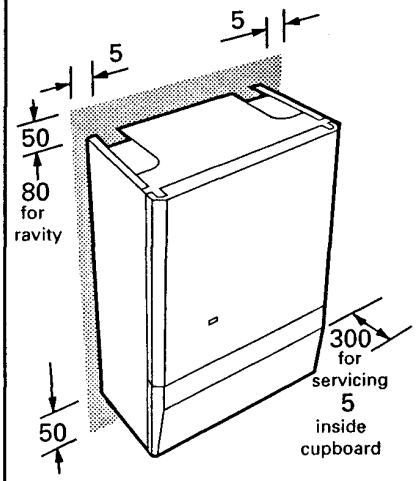

Clearances

NOTE: On gravity applications a clearance of 80mm (3⅛in) is required from the top panel

50 RS

Heat Input	Max	Min
kW	18.32	15.02
Btu/h	62,500	51,250

Heat Output	Max	Min
kW	14.65	12.02
Btu/h	50,000	41,000

Burner Pressure	Max	Min
mbar	16.3 ± 0.5	11.2 ± 0.5
in wg	6.5 ± 0.2	4.5 ± 0.2

Gas Connection	RC½ (½in BSPT)
Electrical Supply	230V~50Hz fused 3A
Controls	on/off boiler thermostat with pilot/thermocouple cut out/overheat thermostat on fully pumped applications only
Connections	2 x 22mm and a kit for gravity

Lifting Weight	37.3 kg (82.1 lbs)	
Water Content	2.1 litres (0.46 gals)	
Static Head	Max	Min
metres	30	1
feet	100	3.25
Low Head	Min 0.15m (6in)	
System Design	gravity hot water fully pumped open vented and sealed systems	
Heat Exchanger	cast iron monobloc	
Gas Rate (after 10 mins)	1.75m³/h (61.6ft³/h)	
Outercase Dimensions	Height	600mm
	Width	420mm
	Depth	287mm
Flue Terminal Dimensions	Height	208mm
	Width	293mm
	Depth	173mm

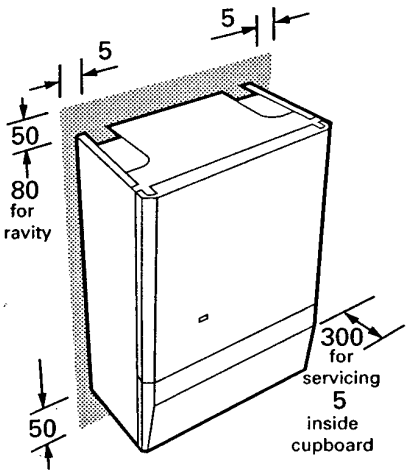

Clearances

NOTE: On gravity applications a clearance of 80mm (3⅛in) is required from the top panel

60RS

Heat Input	Max	Min
kW	21.98	18.68
Btu/h	75,000	63,750

Heat Output	Max	Min
kW	17.58	14.95
Btu/h	60,000	51,000

Burner Pressure	Max	Min
mbar	16.0 ± 0.5	12.0 ± 0.5
in wg	6.4 ± 0.2	4.8 ± 0.2

Gas Connection	RC½ (½in BSPT)
Electrical Supply	230V~50Hz fused 3A
Controls	on/off boiler thermostat with pilot/thermocouple cut out/overheat thermostat on fully pumped applications only
Connections	2 x 22mm and a kit for gravity

Lifting Weight	37.3 kg (82.1 lbs)	
Water Content	2.1 litres (0.46 gals)	
Static Head	Max	Min
metres	30	1
feet	100	3.25
Low Head	Min 0.15m (6in)	
System Design	gravity hot water fully pumped open vented and sealed systems	
Heat Exchanger	cast iron monobloc	
Gas Rate (after 10 mins)	2.09m³/h (74.0ft³/h)	
Outercase Dimensions	Height	600mm
	Width	420mm
	Depth	287mm
Flue Terminal Dimensions	Height	208mm
	Width	293mm
	Depth	173mm

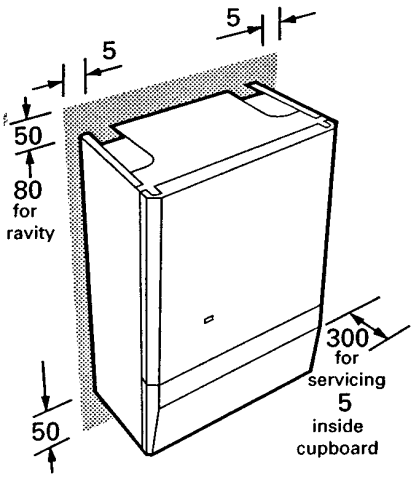

Clearances

NOTE: On gravity applications a clearance of 80mm (3⅛in) is required from the top panel

System Details - Page 8

(and By-pass Requirements)

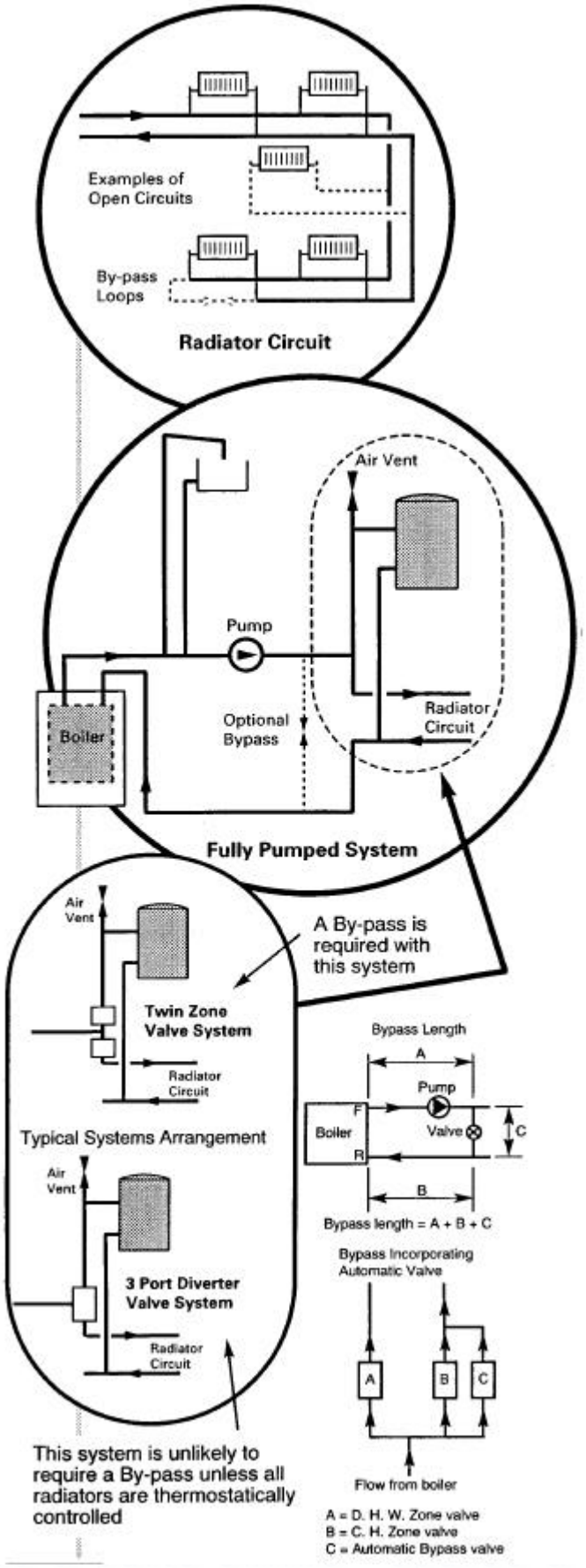

Water Circulating Systems

The appliance is suitable for use with fully pumped open vented systems (small bore and micro-bore), gravity domestic hot water with pumped central heating systems and sealed systems.

The following conditions should be observed on all systems:

- The static head must not exceed 30m (100ft) of water.
- The boiler must only be used with an indirect cylinder.
- Drain points should be fitted to the lowest points in the system.
- All electrical wiring, gas and water pipes must be installed in a way which would not restrict the servicing of the boiler.
- Position isolating valves as close to circulating pump as practicable.
- For fuel economy and best boiler performance, the system should be designed so that gravity circulation does not take place in the heating system when the pump is not running.

Treatment of Water Circulating Systems

For optimum performance after installation, this boiler and its associated central heating system must be flushed in accordance with the guidelines given in BS7593:1992 "Treatment of water in domestic hot water central heating systems".
This must involve the use of a proprietry cleanser, such as BetzDearborn's Sentinel X300 or X400, or Fernox's Superfloc. Full instructions are supplied with the products but for immediate information please contact BetzDearborn on 0151 420 9563, or Fernox on 01799 550811.
For long term protection against corrosion and scale, after flushing it is recommended that an inhibitor such as BetzDearborn's Sentinel X100, or Fernox's MB-1 or Copal is dosed in accordance with the guidelines given in BS7593:1992.
Failure to flush and add inhibitor to the system may invalidate the appliance warranty.

BYPASS REQUIREMENTS

- The boiler is fitted with a pump overrun device which allows the removal of residual heat from the boiler. NOTE: The pump overrun will operate for approximately 3 minutes. The system design must therefore always provide an open circuit for water to circulate between the boiler flow and return.
- If a system has an open circuit a bypass is not required.
- A system using a 3 port diverter valve does not normally require a bypass and therefore this system is recommended. The exception to this is where all radiators in the system are fitted with thermostatic valves, in which case a bypass would be required. However, if one radiator in such a system was fitted with 2 lockshield valves a bypass would not be required.
- A system controlled by non-electrical valves e.g. mechanical thermostatic control valves both on the radiators and the hot water circuit and systems using twin zone valves (e.g. Honeywell 'S' Plan) will require a bypass.

The bypass circuit can be:-
A) A minimum of 9 metres of 22mm pipe (measured between the boiler flow and return connections). It should be fitted with a lockshield valve opened at least 1 full turn to give a minimum flow rate of 8 litres/mm (1.8 gal/mm).

B) A radiator fitted with lockshield valves. The radiator output should be a minimum of 800 watts (2,700 Btu/h). Typically a convector type radiator with an area of 3750 cm^2 ($4ft^2$) is adequate.

C) By including an automatic bypass valve in the system (see diagram).

D) Any circuit that provides the same operating conditions as option A or option B.

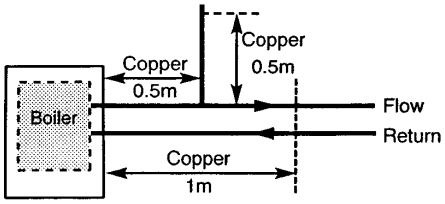

Copper Pipe In Non-Metallic System

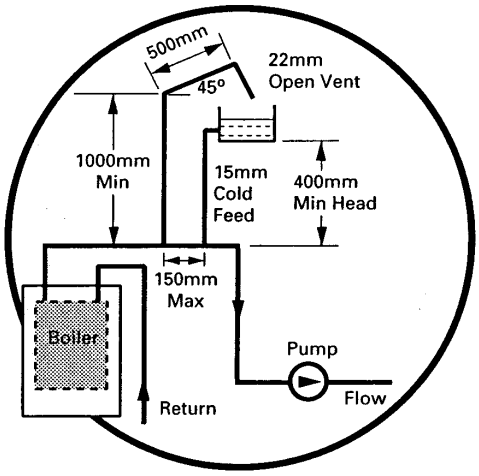

Typical Low Head Installation

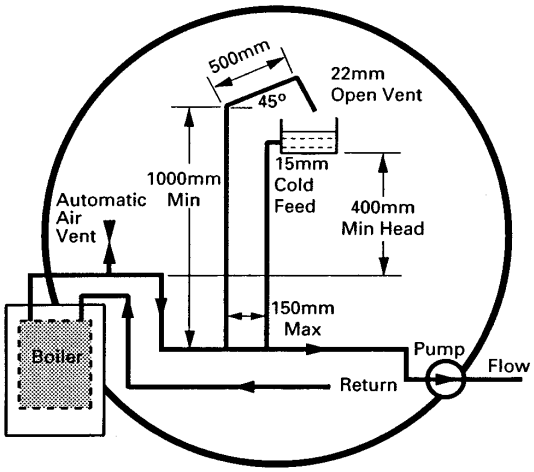

Alternative Layout

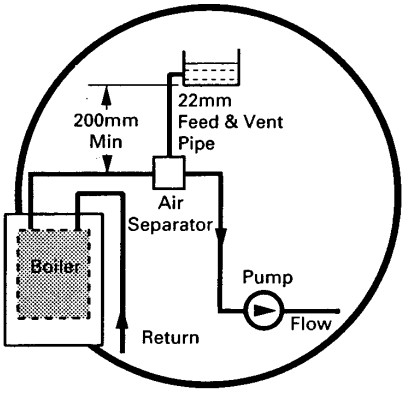

Alternative Low Head Installation

System Controls

For optimum operating conditions, the heating system into which the boiler is installed should include a control system.

Such a system will comprise of timer control and a separate room or cylinder thermostat as appropriate.

The boiler should be controlled so that it operates on demand only.

Operation of the system under control of the boiler thermostat only, does not produce the best results.

Pipework

The sizes of flow and return pipes from the boiler should be determined by normal methods, according to the requirements of the system.

It is recommended that the system is designed for an 11°C (20°F) drop in temperature across the system.

In systems using non-metallic pipework it is necessary to use copper pipe for the boiler Flow and Return. The copper must extend at least 1 metre from the boiler and include any branches. The copper pipe must not be insulated.

Fully Pumped, Open Vented Systems

Low Head Installation

Using a close couple arrangement the minimum head is as shown in the diagram, subject to the following conditions:

1) The correct heat input.

2) The pump being adjusted to give an 11°C drop across the boiler.

3) The pump must be fitted on the flow.

4) The pump must be fitted in accordance with the pump manufacturer's instructions.

5) The open vent pipe must be taken up from a tee in a horizontal section of the flow pipe.

Alternative Low Head Installation for all Solo 2 RS

If less height is available then a combined vent and feed pipe may be connected. This must be a minimum of 22mm diameter. It is recommended that an air separator is fitted when using a combined feed and vent pipe.

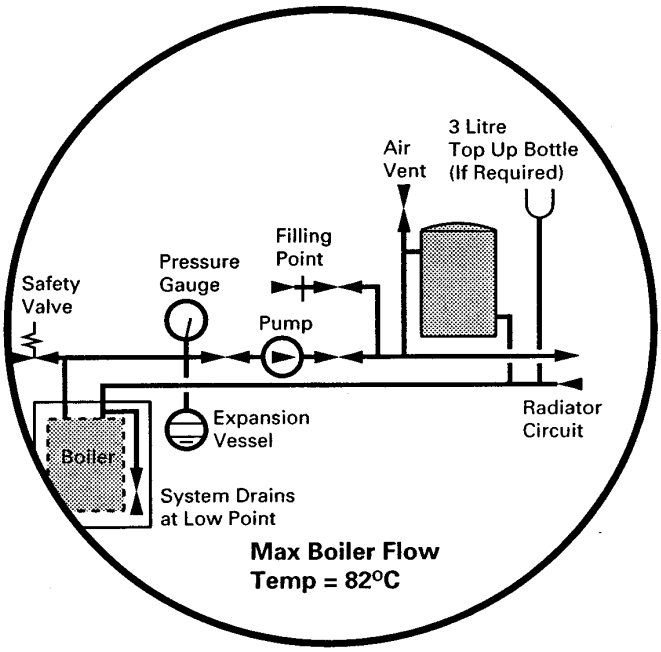

Method of determining minimum value of expansion vessel volume for sealed systems using Baxi Boilers

Vessel Charge Pressure (Bar)	Initial System Pressure (Bar)	Multiply Total Water Content Of System By (Litres)
0.5	0.5	0.067
	1.0	0.112
	1.5	0.207
	2.0	0.441
1.0	1.0	0.087
	1.5	0.152
	2.0	0.330
1.5	1.5	0.125
	2.0	0.265

Example :- System Volume = 75 litres
Vessel Charge Pressure = 1.0 bar
Initial System Pressure = 1.5 bar
Then :- 75 x 0.152 = 11.4 litres
Expansion Vessel Volume

NOTE

Where a vessel of the calculated size is not obtainable then the next available larger size should be used.

Sealed Systems

SAFETY VALVE

A safety valve complying with the requirements of BS 6750 Part 1 must be fitted close to the boiler on the flow pipe by means of a horizontal or vertically upward connection with no intervening valve or restrictions and should be positioned to facilitate testing. The valve should be pre-set and non-adjustable to operate at a pressure of 3 bar (45 lbf/in^2). It must be arranged to discharge any water or steam through a pipe to a safe outlet position.

PRESSURE GAUGE

A pressure gauge of minimum range 0-4 bar (0-60 lbf/in^2) with a fill pressure indicator must be fitted to the system, preferably at the same point as the expansion vessel in an easily visible position.

EXPANSION VESSEL

An expansion vessel complying with the requirements of BS 4814 must be fitted to the system by means of a connection close to the inlet side of the circulating pump in accordance with the manufacturers instructions, the connecting pipe being unrestricted and not less than 15mm (½ in) nominal size. The volume of the vessel should be suitable for the system water content and the nitrogen or air charge pressure should not be less than the system static head.

Further details of sealed system design can be obtained from BS 5449: Part 1 and the British Gas publication entitled 'Specifications for Domestic Wet Central Heating Systems'.

FILLING POINT

A filling point and an approved stop valve to BS 1010 must be fitted at low level and the method used for filling the system should be approved by the local water undertaking. For further details see BS 6798.

A method of replacing water lost from the system should be provided either by means of a make up vessel of not more than 3 litres (5 pints) capacity, mounted above the highest point of the system, or by pre-pressurisation of the system.

A method of venting the system during filling and commissioning must be provided by fitting automatic air vents or by venting manually.

The hot water storage vessel must be of the indirect coil type. All components used in the system must be suitable for operation at 11 0°C (230°F) and at the pressure allowed by the safety valve.

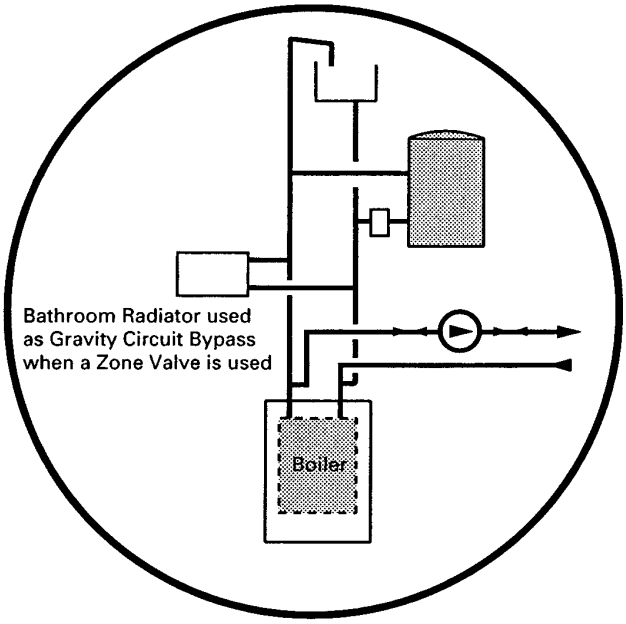

Gravity Systems

When the boiler is to be installed to an existing or new gravity domestic hot water and pumped central heating system, the following considerations should be given to the design of the gravity domestic hot water flow and return pipes.

The minimum circulating head should not be less than 1m (3ft) with a maximum horizontal run of 3m (10ft) when using 28mm pipes. Smaller pipe sizes and longer horizontal runs are acceptable with suitably increased circulating heads.

The system must be designed to prevent reverse circulation.

Pipes should be laid to maximum fall avoiding points of possible air lock.

If the domestic hot water temperature is controlled by a cylinder thermostat and zone valve, it is recommended that a bypass is installed in the gravity circuit. One method is to install a bathroom radiator, fitted with two lock shield valves. Mechanical valves which allow the boiler to operate when the valve is closed should not be used.

Note: If the above conditions cannot be met, then pumped primaries must be used.

See page 25 for wiring of boiler when installed with gravity hot water.

Hydraulic Charts

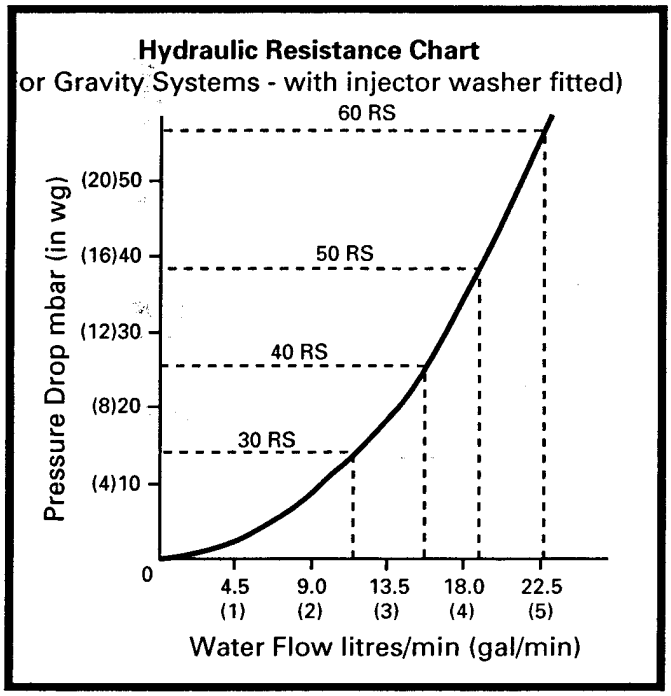

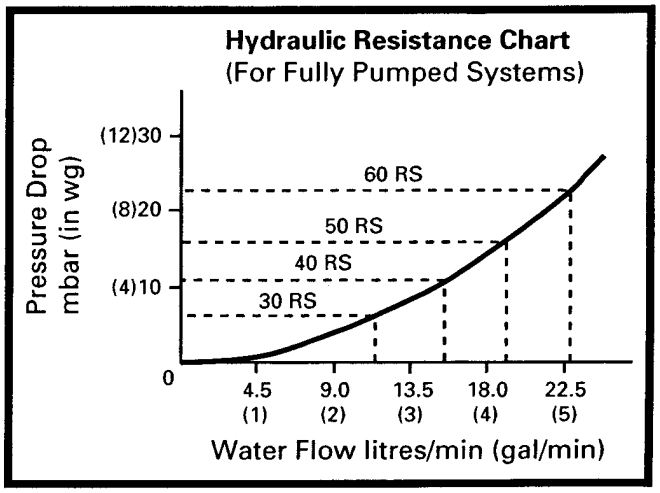

Site Requirements - Page 12

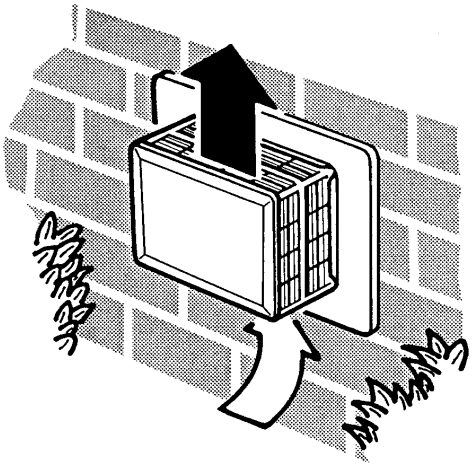

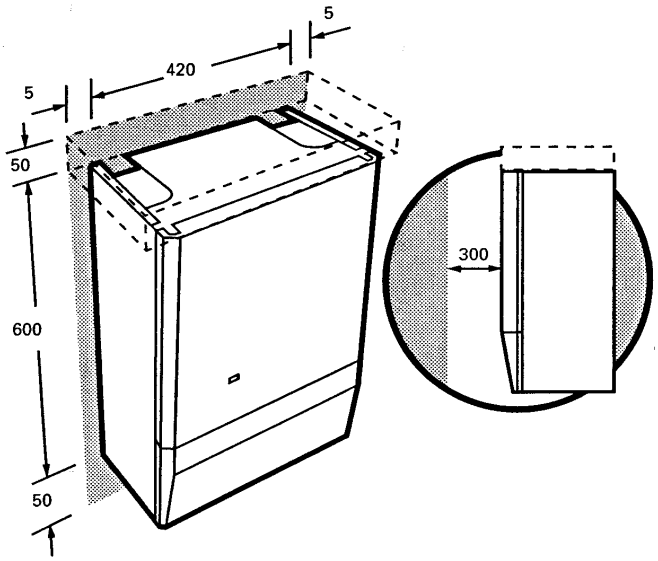

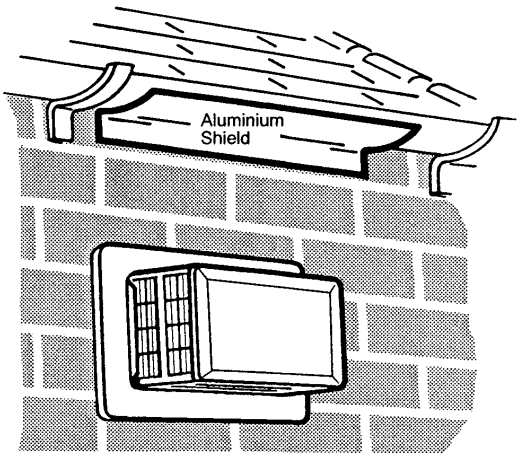

Location

The appliance may be fitted to any suitable wall with the flue passing through an outside wall and discharging to atmosphere in a position permitting satisfactory removal of combustion products and providing an adequate air supply. The appliance should be fitted within the building unless other-wise protected by a suitable enclosure ie. garage or outhouse. The appliance may be fitted inside a cupboard provided that ventilation requirements and combustible material standards are adhered to.

If the appliance is fitted in a room containing a bath or shower reference must be made to the Current I.E.E. Wiring Regulations and Building Regulations. If the appliance is to be fitted into a building of timber frame construction then reference must be made to the current edition of Institute of British Gas Engineers Publication IGE/UP/7 (Gas Installations in Timber Framed Housing).

Recommendations for flues are given in BS 5440 Pt1.

Clearances

A flat vertical area is required for the installation of the boiler measuring as shown. A space above the boiler should also be left clear as indicated by the dotted lines.

These dimensions include the necessary clearances around the appliance for case removal, spanner access and air movement. Additional clearances may be required for the passage of pipes around local obstructions such as joists running parallel to the front face of the appliance.

If fitted inside a cupboard the clearance of 300mm shown is only necessary when the cupboard door is open. A clearance of 5mm ($^{3}/_{16}$ in) is required from the front of the casing when the door is closed.

NOTE: On gravity applications a clearance of 80mm ($3^{1}/_{8}$ in) is required from the top panel.

Flue Position

The following guide lines indicate the general requirements for siting balanced flue terminals.

If the terminal is fitted within 1 metre (39in) of a plastic gutter, within 500mm (19½ in) of a painted eave or a painted gutter, an aluminium shield of at least 1 metre (39in) long should be fitted to the underside of the gutter or painted surface. An air space of 5mm ($^{3}/_{16}$ in) should be left between shield and gutter.

If the terminal discharges onto a pathway or passageway, check that combustion products will not cause a nuisance and that the terminal will not obstruct the passageway.

If the outer surface of an outside wall is of combustible material, it should be protected by fitting a non-combustible plate so that it extends not less than 50mm (2in) around the terminal.

WARNING

If a terminal is less than 2 metres (78¾ in) above a balcony, above ground or above a flat roof to which people have access then a suitable terminal guard must be provided.

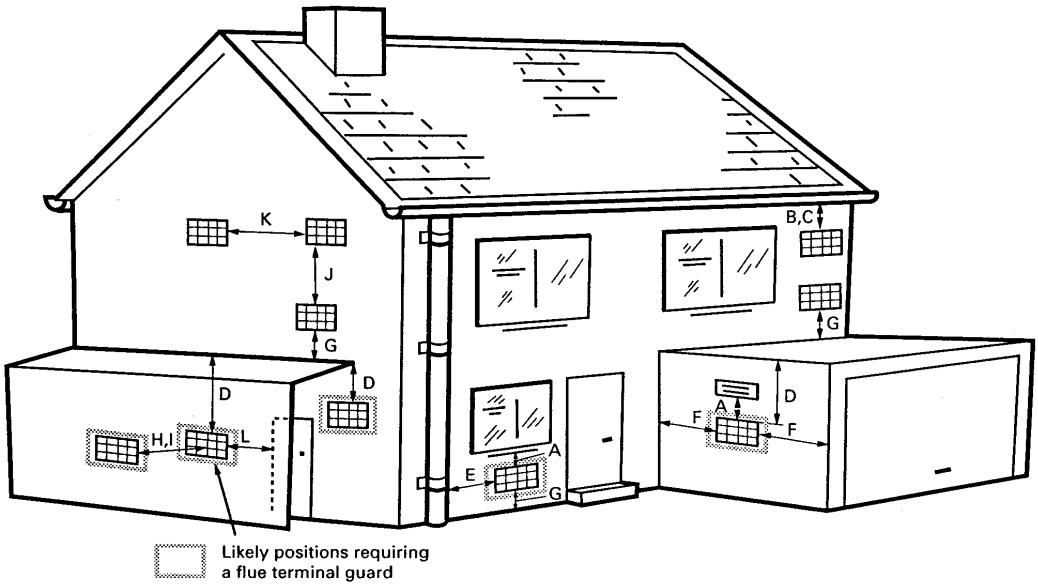

	Terminal Position with Minimum Distance	mm
A	Directly below an openable window or other opening, e.g. an air brick.	300
B	Below gutters, soil pipes or drain pipes.	300
C	Below eaves.	300
D	Below balconies or car port roof	600
E	From vertical drain pipes and soil pipes.	75
F	From internal or external corners.	600
G	Above ground, roof or balcony level.	300
H	From a surface facing a terminal.	600
I	From a terminal facing a terminal.	600
J	Vertically from a terminal on the same wall.	1500
K	Horizontally from a terminal on the same wall.	300
L	For an opening in a car port (e.g. door, window) into a dwelling.	1200

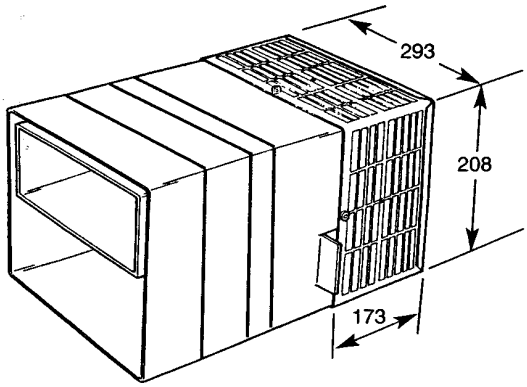

Flue Dimensions

Recommendations for flues are given in BS 5440:1.

The standard flue terminal supplied with the appliance is suitable for use with wall thickness between 100mm (4in) and 356mm (14in).

A flue terminal extension kit is available as an optional extra for wall thickness between 356mm (14in) and 610mm (24in) from the manufacturer. Quote appliance Model N° when ordering.

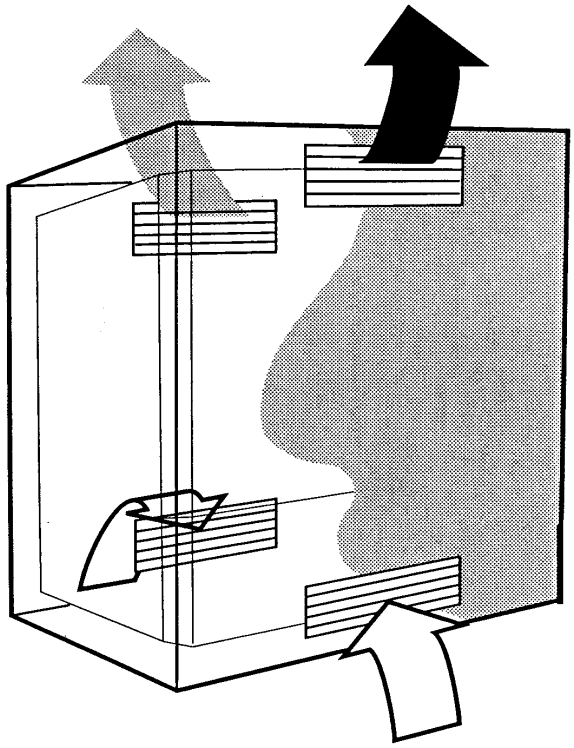

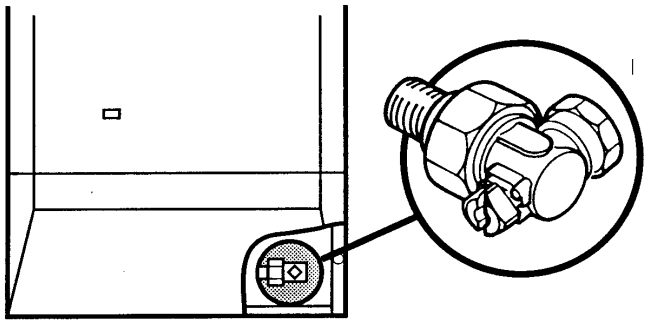

Ventilation of Compartments

Where the appliance is installed in a cupboard or compartment, air vents are required (for cooling purposes) in the cupboard or compartment at high and low level which may communicate with a room or direct to outside air.

Detailed recommendations for air supply are given in BS 5440: Part 2.

An existing cupboard or compartment may be used, provided that it is modified for the purpose. Recommendations for air supplies and details of essential cupboard compartment design are given in BS 5440: Part 2.

NOTE: Both air vents must communicate with the same room or both be on the same wall to outside air.

Model	Position of Air Vent	Air from Room	Air direct from Outside
30	HIGH AND LOW LEVEL	99.0cm² FREE AREA (15.35in²)	49.5cm² FREE AREA (7.68in²)
40	HIGH AND LOW LEVEL	131.9cm² FREE AREA (20.44in²)	66.0cm² FREE AREA (10.22in²)
50	HIGH AND LOW LEVEL	164.9cm² FREE AREA (25.56in²)	82.5cm² FREE AREA (12.78in²)
60	HIGH AND LOW LEVEL	197.9cm² FREE AREA (30.67in²)	99.0cm² FREE AREA (15.34in²)

Gas Supply

The gas installation should be in accordance with BS 6891.

The connection on the appliance is RC½ (½ in BSPT internal) located at the bottom right hand side of the appliance.

Ensure that the pipework from the meter to the appliance is of adequate size. Do not use pipes of a smaller diameter than the appliance gas connection.

Electrical Supply

External wiring must be correctly earthed, polarized and in accordance with CURRENT I.E.E. WIRING REGULATIONS.

The mains supply is 230V ~ 50Hz fused at 3A. NOTE: The method of connection to the electricity supply must facilitate complete electrical isolation of the appliance, preferably by the use of a fused three pin plug and unswitched shuttered socket outlet, both complying with the requirements of BS 1363.
Alternatively, connection may be made via a fused double-pole isolator with a contact separation of a least 3mm in all poles and serving the appliance and system controls only.

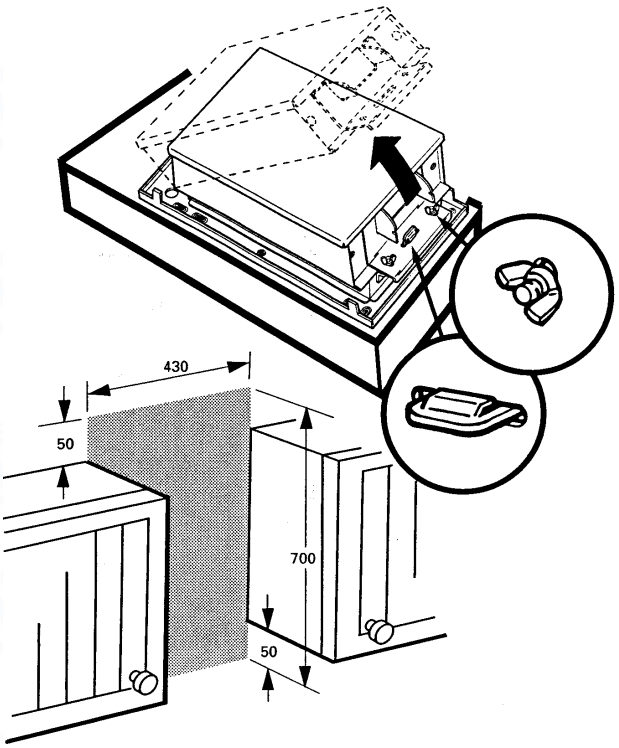

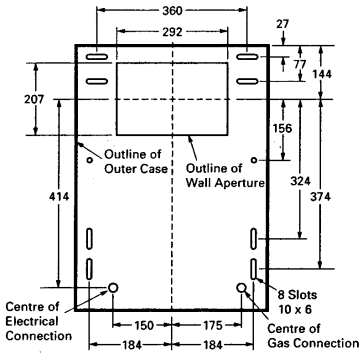

Fixing Template

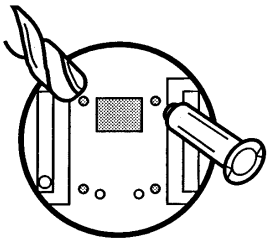

Initial Preparation

Unpack the contents of carton leaving the combustion box and mounting plate assembled on the base tray. Place the outer case in a safe place until required. Detach the fixing template from the packaging.

Remove the two wing nuts securing the combustion box to the mounting plate.

Disengage the spring latch and lift the combustion box away from the airbox. Place the combustion box on its back.

Choose a flat vertical area to position the boiler, making necessary allowances for required minimum clearances. If fitting between wall cupboards ensure that the minimum available width is as shown.

Hold the wall template against the wall at the required boiler location. Ensure that the top of the template is level. The template represents the outer limits of the appliance, plus the required minimum clearances.

NOTE: On gravity applications a clearance of 80mm ($3^1/_8$in) is required from the top panel.

If fitting the appliance between or adjacent to kitchen wall units, ensure that the line on the template indicating the lower edge of the boiler is level with the lower edge of the units and is correctly spaced.

If fitting the appliance in a compartment or cupboard with suitable air vents (see Ventilation of Compartments), ensure that the bottom edge of the template is level with the lower edge of the units and is correctly spaced.

Two holes are provided on the template to allow gas and electrical supplies to be brought directly into the boiler from the wall. The grommet provided must be used when the electrical cable is routed through the wall mounting plate.

Mark the position of the flue hole and four good anchorage points. Where possible use the uppermost and lowest fixing hole positions, otherwise space the fixing holes as far apart as possible. Mark gas and electrical supply access holes if required. Cut out hole for flue. Drill anchorage holes 7mm ($^9/_{32}$ in) diameter by 63mm (2½ in) deep to accept wall plugs.

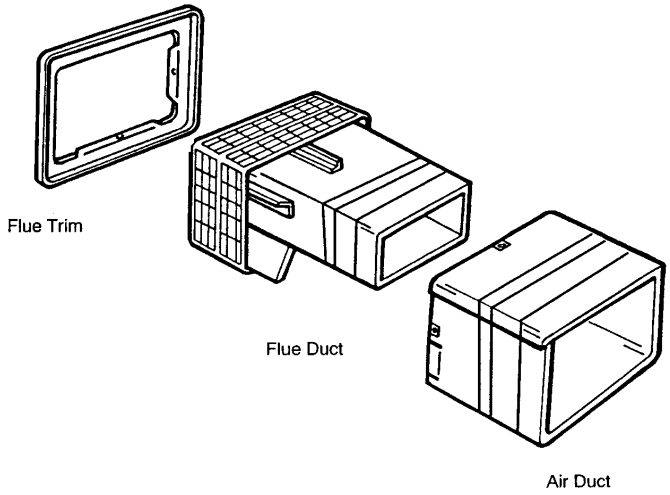

Flue Preparation

Unpack flue duct, flue trim and air duct.

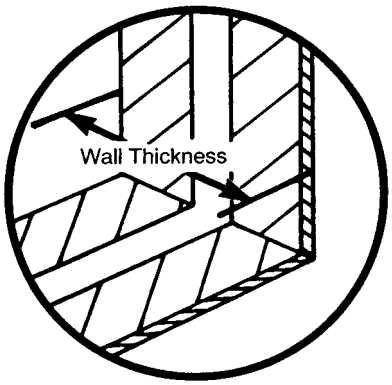

Measure overall wall thickness. If this is between 280mm (11 in) and 355mm (14in), use flue as supplied without alteration.

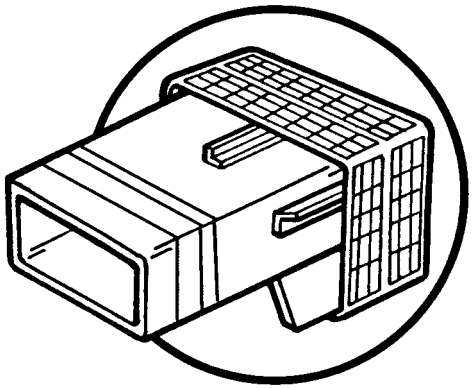

For wall thickness between 102mm (4in) and 280mm (11 in), air duct and flue duct are required to be shortened.

Using the indication on the duct, mark accordingly to table below.

Cut off	Wall Thickness
3in	203mm - 280mm (8in) - (11in)
6in	127mm - 203mm (5in) - (8in)
7in	102mm - 127mm (4in) - (5in)

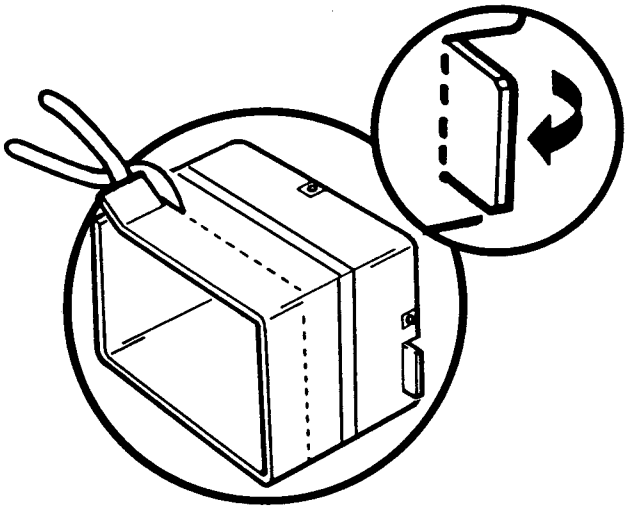

Bend tabs as shown.

Using tin snips, cut around ducts at appropriate mark. Remove any sharp edges.

Fitting the Wall Mounting Plate

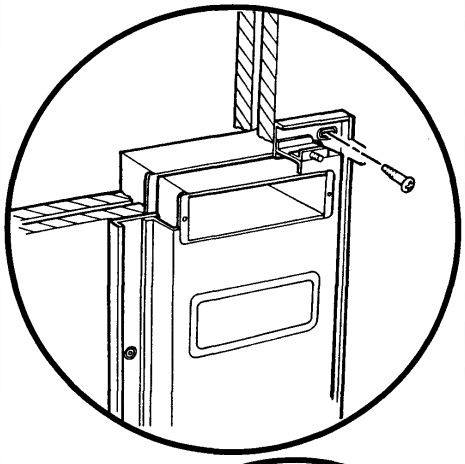

Secure plate to wall using 63mm (2½ in) screws.

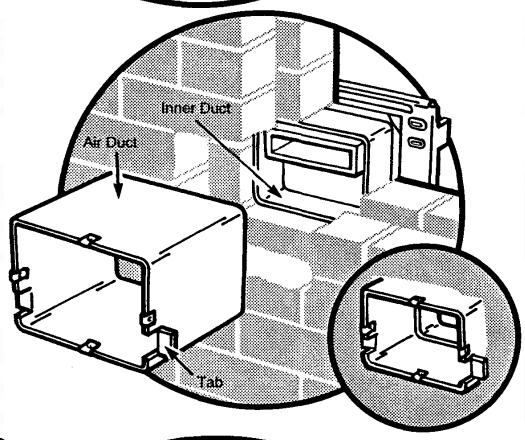

From outside building, pass air duct through wall opening. The two tabs should be positioned at the bottom.

Slide air duct over inner duct until tabs contact wall surface.

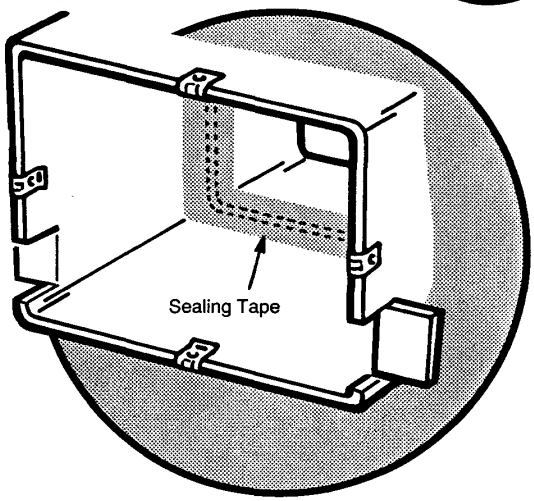

Ensure air duct is horizontal and square to wall face. Using sealing tape supplied make good the joint on inside of the two ducts.

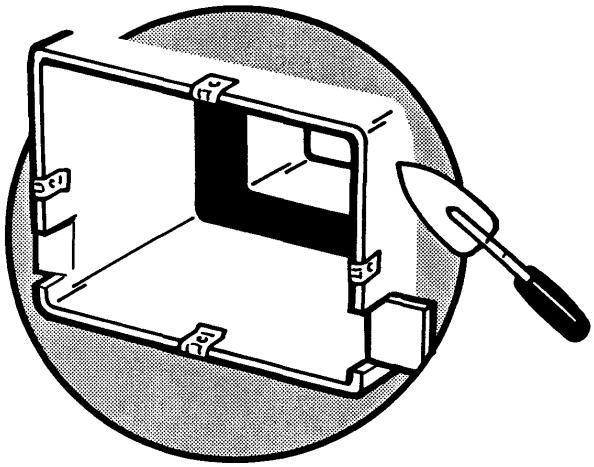

Make good with cement mortar between the outside wall and duct.

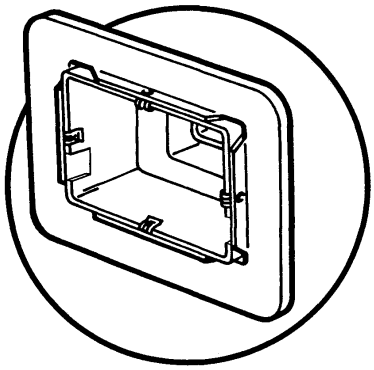

Fitting the Flue Duct

Fit flue trim over air duct.

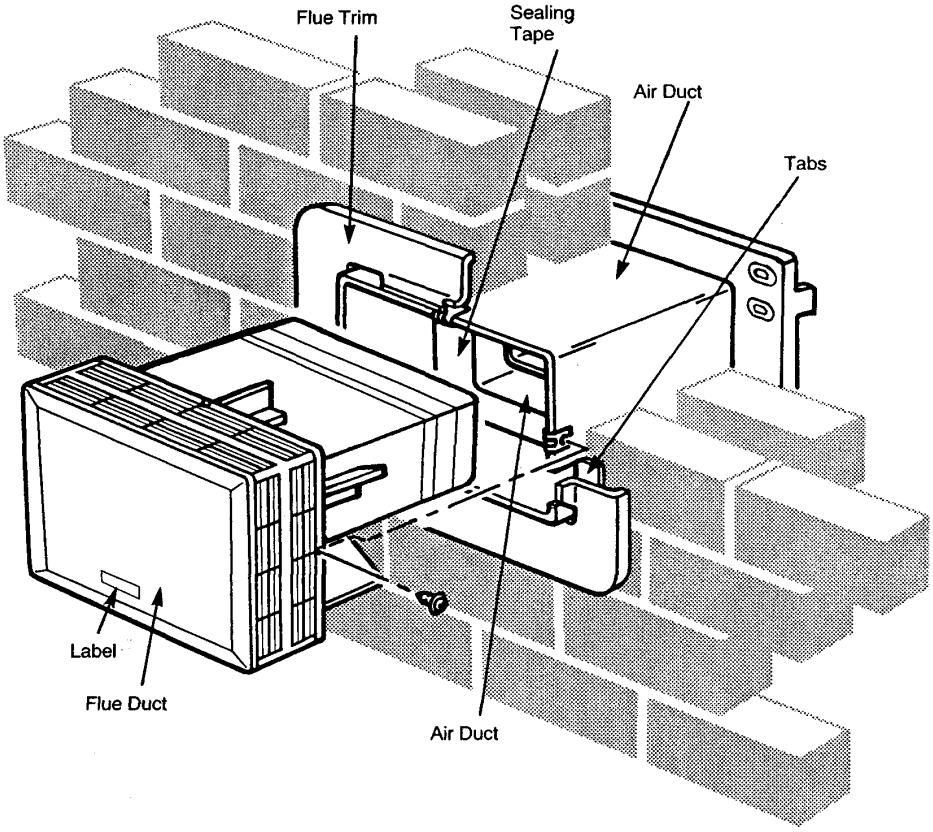

Slide flue duct inside air duct to engage flue duct on boiler, noting correct positioning as labelled.

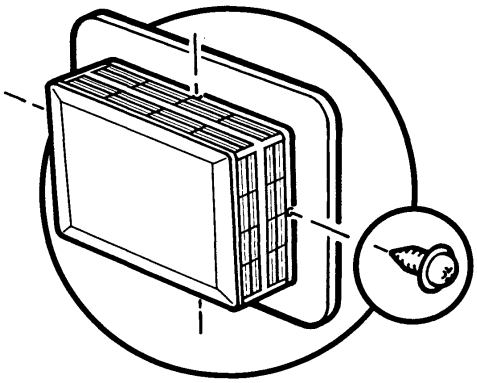

Secure flue duct, flue trim to air duct with four screws provided in the kit.

Remove label from duct.

Terminal Guard

When codes of practice dictate the use of terminal guards, they can be obtained from most plumbers and builders merchants nationwide.

When ordering a terminal guard, quote the appliance model number.

The guard manufacturers listed below can be contacted for terminal sizes and guard model numbers.

Quinnell, Barrett & Quinnell,
884 Old Kent Road,
London, SE15 1NL.
Tel: 071 639 1357.

Tower Flue Components Ltd.,
Tower House,
Vale Rise,
Tonbridge,
Kent.
Tel: 0732 351555

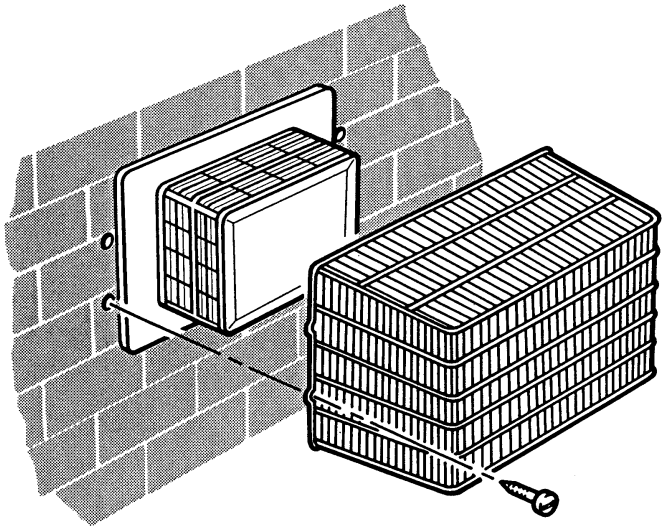

Fitting a Terminal Guard

Position the guard over the terminal on the outside. wall. Ensure guard is equally spaced about terminal. Mark fixing positions.

Drill and plug fixing positions, then secure guard to wall.

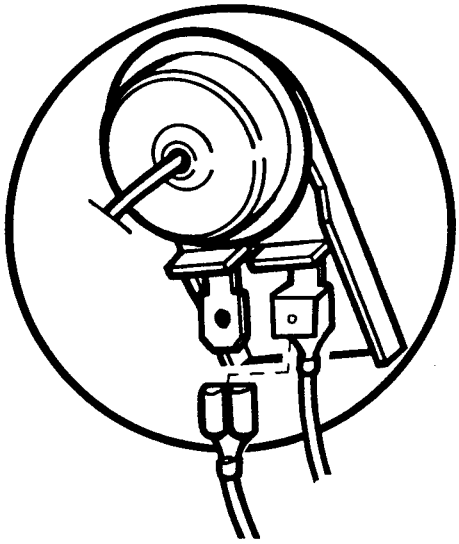

Fitting the Boiler

When the boiler is to be used on a system with gravity D.H.W. it is necessary to disconnect the overheat thermostat by removing the wire with the black sleeve and attaching it to the wire with the red sleeve as shown.

The overheat thermostat is now by-passed and will allow the appliance to perform satisfactorily on gravity circulation.

NOTE: Even though the overheat thermostat is not operational, it must not be removed from the pocket in the heat exchanger except during servicing.

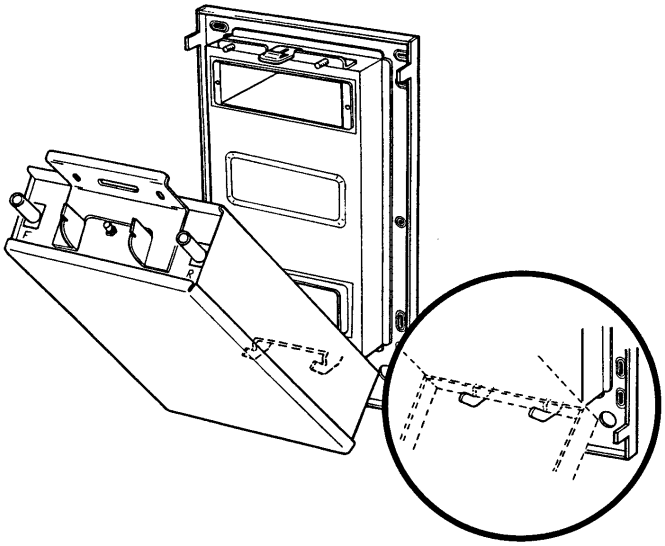

Lift boiler and engage centrally the back bottom edge into the hook bracket on the mounting plate.

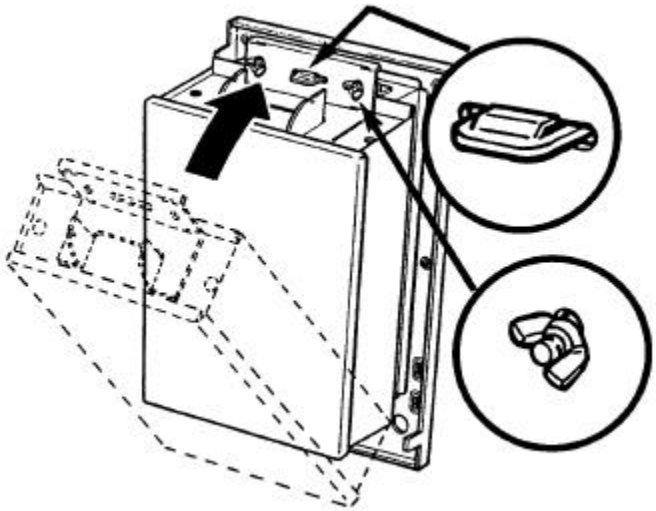

Rotate the boiler back to the mounting plate to engage two studs and spring latch.

Fit the two wing nuts. Tighten to compress rear flue seal.

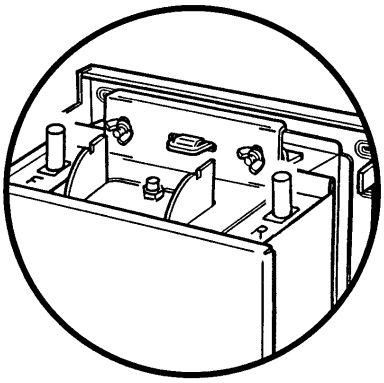

Water Connections

The boiler is supplied ready for fully pumped and sealed systems.

The boiler has 2 connection tails to accept capillary or compression fittings:-

22mm tail marked F for Flow.
22mm tail marked R for Return.

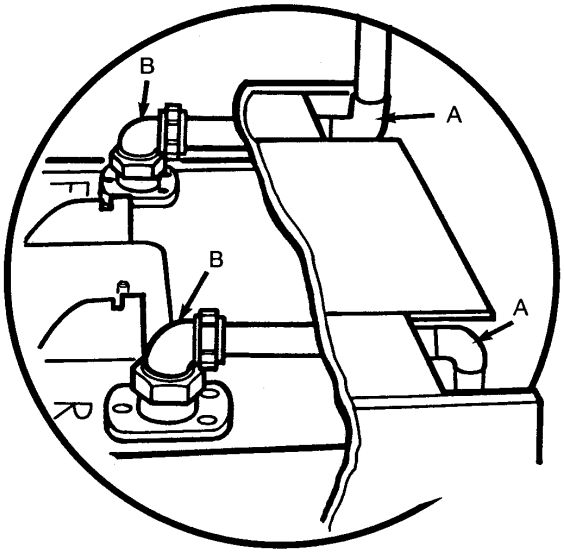

Pipe Routes

Pipework should be routed to the back plate. Pipes may also be routed to drop down within outer case. Spaces are available at both sides. If pipes are routed to drop down within the outercase vents are required.

It is recommended that fittings ‘A’ are of copper capillary type.

It is recommended that fittings ‘B’ are compression type.

Fully Pumped System

For fully pumped system, connect to tails marked F and R.

Sealed System

For sealed system, connect to tails marked F and R.

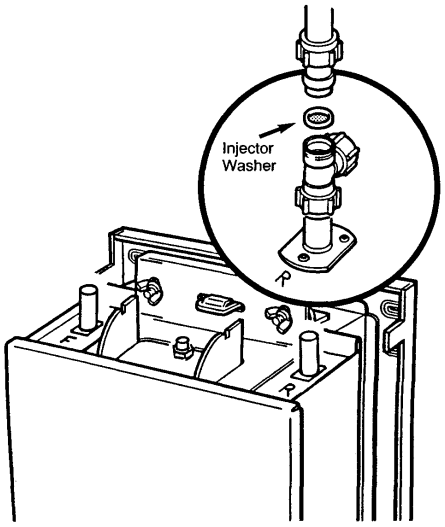

Gravity Hot Water System

For gravity domestic hot water and pumped central heating system, connect tee supplied in kit to the tail marked R. Ensure that the injector washer is positioned correctly as shown.

Failure to fit the injector washer will result in reverse circulation in the D.H.W. circuit.

The gravity circuit should be installed in 28mm diameter copper pipe as shown.

Ensure that pipes run perpendicular to the wall to allow fitting of the outercase.

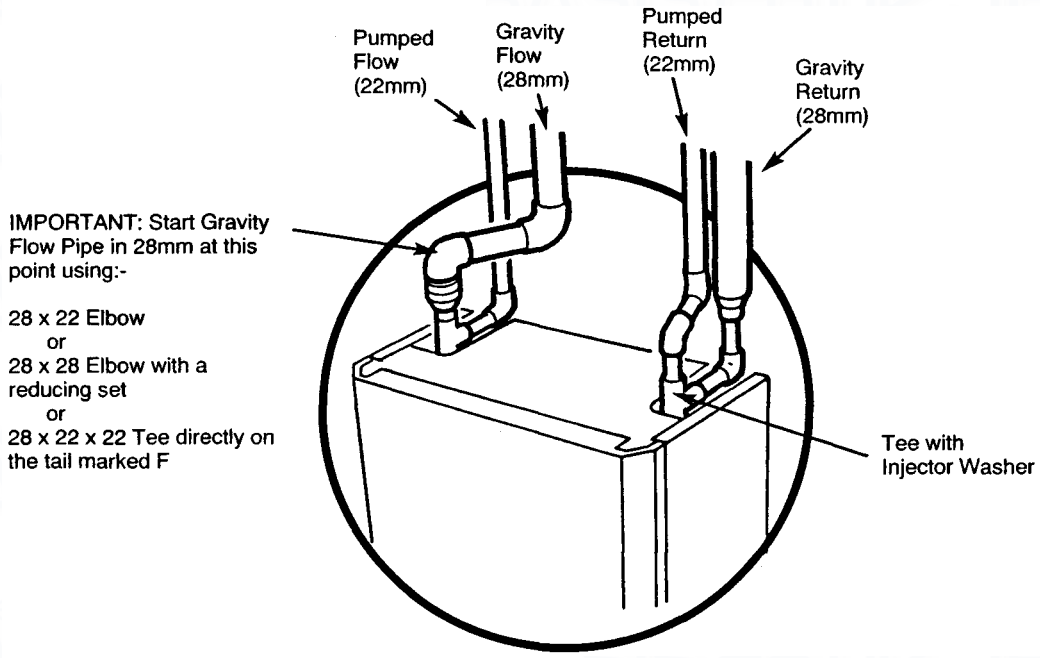

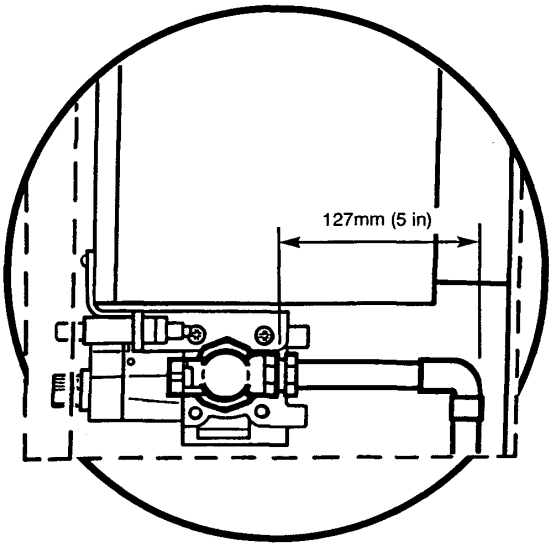

Gas Connection

Gas connection is made on the union gas service tap (female ½ in B.S.P. thread). Dimension shown will ensure that gas pipe does not interfere with outer case or any downward routed pipes.

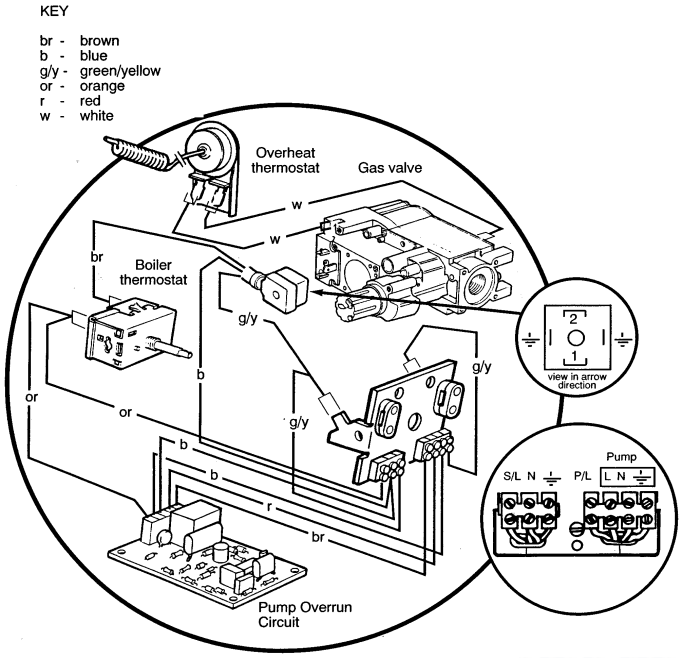

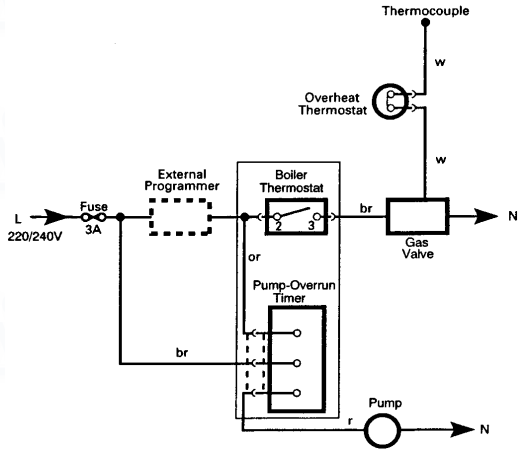

Electrical Supply

The electrical supply for this Solo 2 RS depends on the design of the central heating system i.e.

Gravity DHW and Pumped Central Heating - 3 core cable.

Fully Pumped, Open Vented with rising primaries - 4 core cable. However, 3 core cable can be used if the timed pump overrun and overheat thermostat are disconnected.

Sealed Systems and Fully Pumped Systems with dropping pipework - 4 core cable must be used.

Detail of the electrical supply for the various system designs can be found below.

SYSTEMS

The recommended cable for connection to the appliance terminal strip is 4-core 0.75mm^2 (24 x 0.2mm dia) P.V.C. IEC 53 code 227 (heat resistant).

External wiring must be correctly earthed and polarised and in accordance with current I.E.E. wiring regulations.

The mains supply required is 230V ~ 50Hz fused at 3A.

WARNING

THIS APPLIANCE MUST BE EARTHED.

NOTE: The method of connection to the electricity supply must facilitate complete electrical isolation of the appliance.

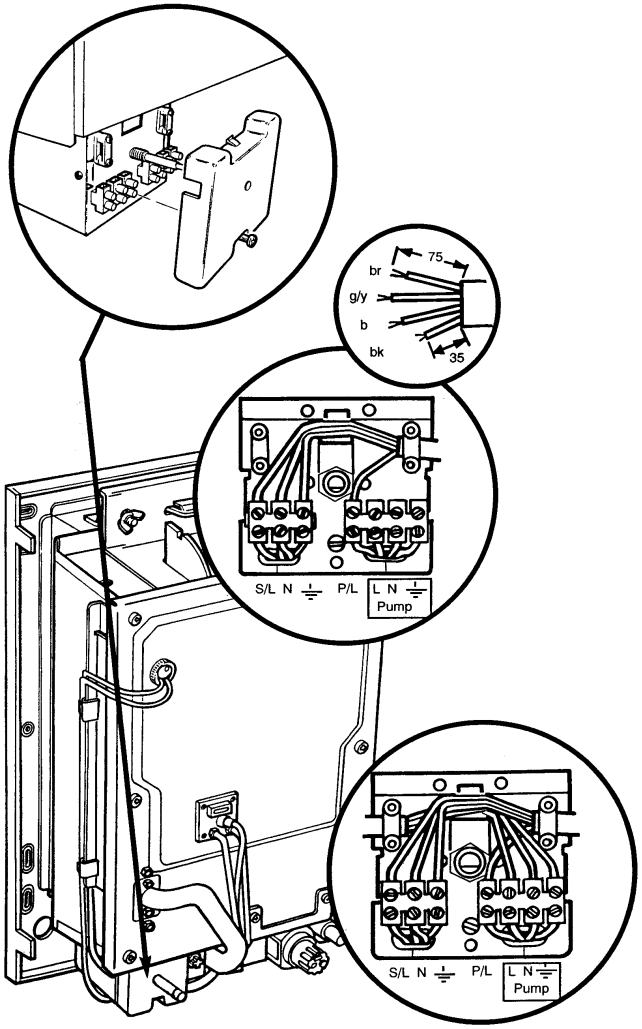

Loosen the securing screw sufficiently for the electrical cover to be removed from the thermostat box.

Bare back the input cable to the dimensions shown.

Fit the electrical input cable as follows:

Connect the switched live to the terminal marked S/L.

Connect the permanent live to the terminal marked P/L.

Connect the supply neutral to the terminal marked N and the supply earth to the terminal marked ⏚

Secure the cable in place with the right hand cable clamp.

Fit the pump outlet as follows:

Connect the pump earth to the terminal marked ⏚.

Connect the pump neutral to the terminal marked N.

Connect the pump live to the terminal marked L.

Secure the cable in place with the left hand cable clamp.

Replace the electrical cover and securing screw.

A cable clip is supplied in the kit to secure the cable to the bottom of the combustion box.

In the event of an electrical fault after installation of the appliance, preliminary electrical system checks should be carried out:- earth continuity, polarity and resistance to earth.

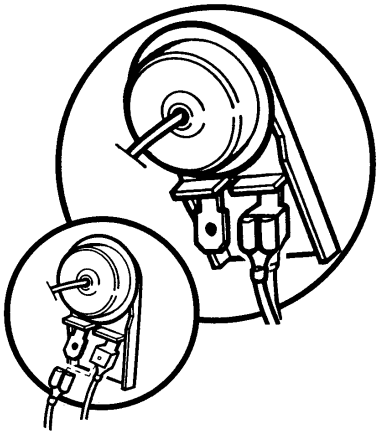

FOR GRAVITY D.H.W. AND PUMPED C. H.

When the boiler is to be used on a system with gravity D.H.W. ensure that the overheat thermostat has been disconnected as shown.

The overheat thermostat is now by-passed and will allow the appliance to perform satisfactorily on gravity circulation.

NOTE: Even though the overheat thermostat is not operational, it must not be removed from the pocket in the heat exchanger.

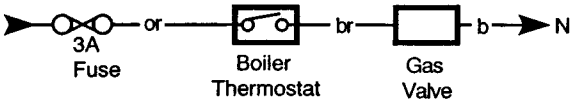

The recommended cable for connection to the appliance terminal strip is 3-core 0.75mm^2 (24 x 0.2mm) P.V.C. IEC 53 code 227 (heat resistant).

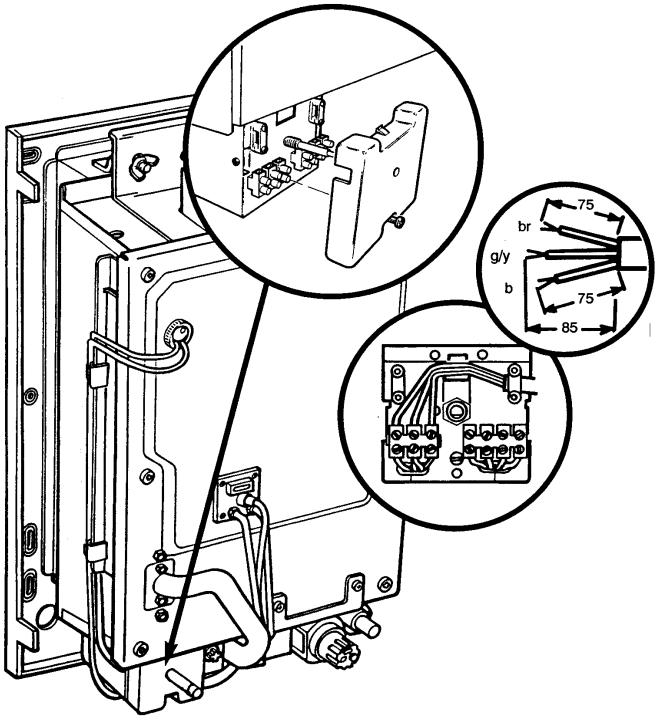

WARNING: This appliance must be earthed.

Loosen securing screw sufficiently for the electrical cover to be removed from the thermostat box.

Bare back input cable to dimensions shown.

Fit input cable to terminal block on left passing through the grip provided.

The pump should be wired to the junction box or programmer.

Replace electrical cover and securing screw.

A cable clip is supplied in the kit to secure the cable to the bottom of the combustion

In the event of an electrical fault after installation of the appliance, preliminary electrical system checks should be carried out:- earth continuity, polarity and resistance to earth.

Commissioning The Appliance - Page 26

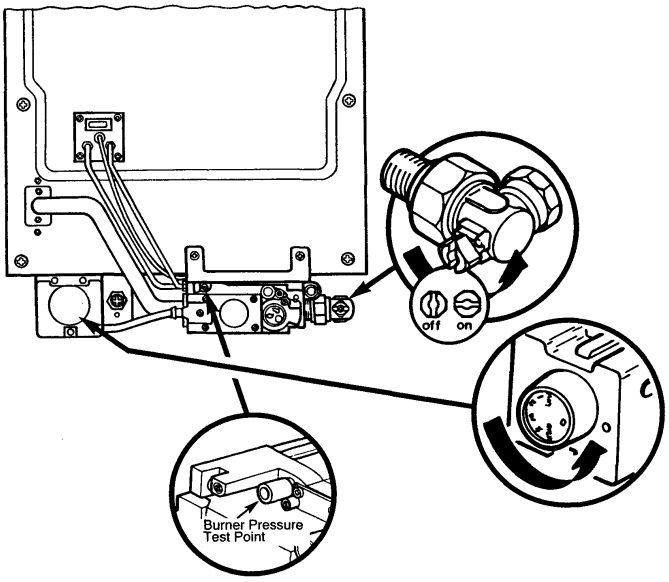

Fill the whole system in accordance with BS 7593:1992 (See Treatment of Water Circulating Systems in the System Details section). Check for water leaks.

Purge air from supply pipe at gas service tap (BS 6891).

Turn gas service tap anticlockwise to ON position. Check for gas soundness up to gas valve.

Ensure that all external controls, e.g. room thermostat, timer, etc. are calling for heat.

Fit thermostat control knob (packed with the contents in plastic bag).

Turn anticlockwise to OFF position, marked O.

Slacken burner pressure test point screw. Connect pressure gauge.

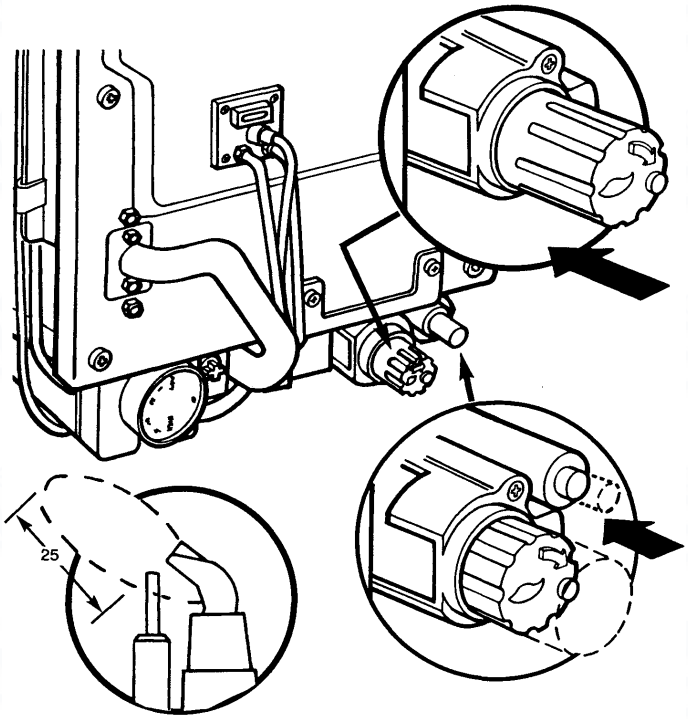

Press gas control knob fully inwards and hold.

Press in igniter button and release. Repeat until pilot ignites. Continue to hold in gas control knob for approximately 15 seconds and then release. Pilot should stay alight.

Check the appearance of the pilot flame to ensure that it envelops the tip of the thermocouple and is approximately 25mm long. Check that the thermocouple output is between 10-15 mV closed circuit.

The pilot pressure is factory set and cannot be adjusted.

If pilot fails to remain alight, repeat from start of paragraph above.

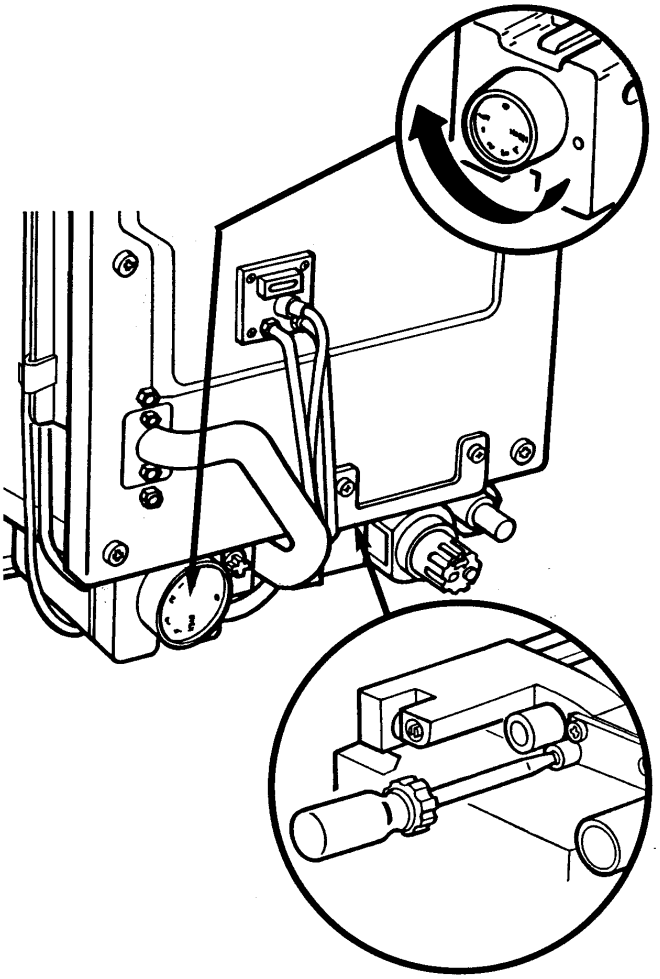

Turn on main electricity supply.

Light burner by turning thermostat knob to high setting (fully clockwise).

Check pressure after 10 minutes. Adjust if necessary to the relevant figures for the corresponding model shown in the chart below.

To set the main burner pressure adjust the throttle as shown. To increase the burner pressure, turn the adjustment screw in either direction until the required pressure is obtained.

Set any timer control, room thermostats etc to the customer's specific requirements.

Turn the boiler thermostat knob to the OFF position marked O. Screw home the pressure test point screw. Turn the boiler thermostat knob to the required setting. Make a final check for gas soundness of all gas carrying joints on boiler.

Check operation of flame failure device. Turn gas control knob clockwise in the-direction marked O. The control knob cannot be depressed until ignition restart interlock device in gas valve has disengaged. This takes 60 seconds approximately. Pilot must not be relit for 3 minutes after shut down.

The appliance is fitted with a pump overrun timer which keeps the pump running (fully pumped systems only), when any external control switches the appliance off. To check the operation of this, turn programmer, time switch off, the pump should continue to run for approximately 3 minutes and then stop.

The boiler and system should be run and then flushed and treated in accordance with BS7593: 1992 and the flushing agent/inhibitor manufacturers instructions. When all the air has been removed from the water circuit, the pump and radiators should be balanced to achieve the design temperature drop across the system. Recheck for water leaks.

Carefully read and complete all sections of the "Benchmark" Installation, Commissioning and Service Record Log Book that are relevant to the appliance and installation. The details of the Log Book will be required in the event of any warranty work. The Log Book must be handed to the user for safe keeping and each subsequent regular service visit recorded.

Model		Input kW	Input Btu/h	Setting Pressure mbar	Setting Pressure in wg
30	Maximum	11.00	37,500	15.4 ± 0.5	6.2 ± 0.2
	Minimum	7.69	26,250	8.0 ± 0.5	3.2 ± 0.2
40	Maximum	14.65	50,000	16.3 ± 0.5	6.5 ± 0.2
	Minimum	11.36	38,750	10.3 ± 0.5	4.1 ± 0.2
50	Maximum	18.32	62,500	16.3 ± 0.5	6.5 ± 0.2
	Minimum	15.02	51,250	11.2 ± 0.5	4.5 ± 0.2
60	Maximum	21.98	75,000	16.0 ± 0.5	6.4 ± 0.2
	Minimum	18.68	63,750	12.0 ± 0.5	4.8 ± 0.2

Fitting The Outer Case - Page 28

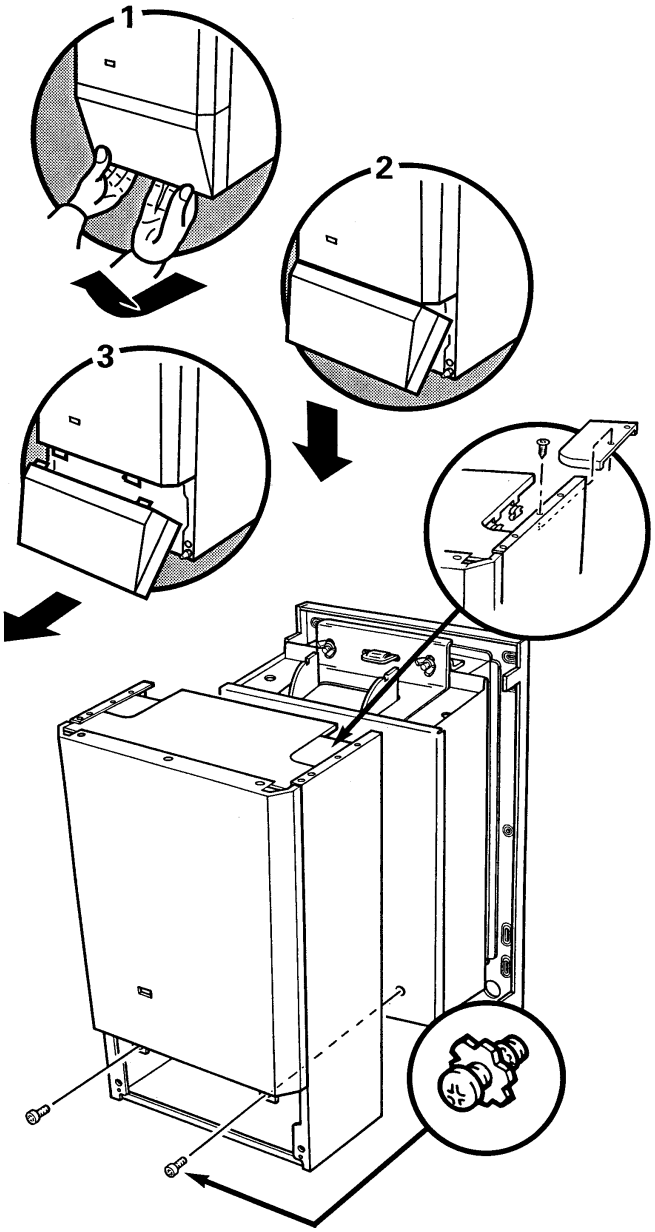

Remove the lower door panel from the ready assembled outer case by following the sequence of diagrams.

If the appliance is to be fitted on a gravity system remove the two infill panels.

Offer the outer case up to the hooks on the top of the combustion box ensuring that it engages.

Secure the outer case using the two screws and washers that are supplied.

Replace the lower front door panel.

Instruct the user in the operation of the boiler. Hand over the User's and Installation Instructions and the Log Book to the user giving advice on the necessity of regular servicing.

Overheat Cut-Off Device - Page 29

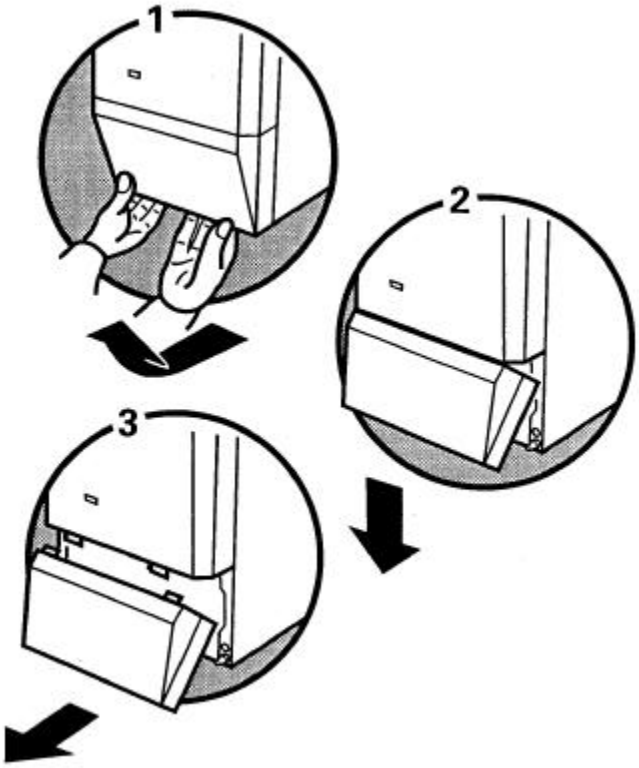

Operation

The overheat cut-off device is of the manual reset type and therefore it is important that the user knows how to reset the control should it ever cut out.

Remove the lower door panel by following the sequence of diagrams.

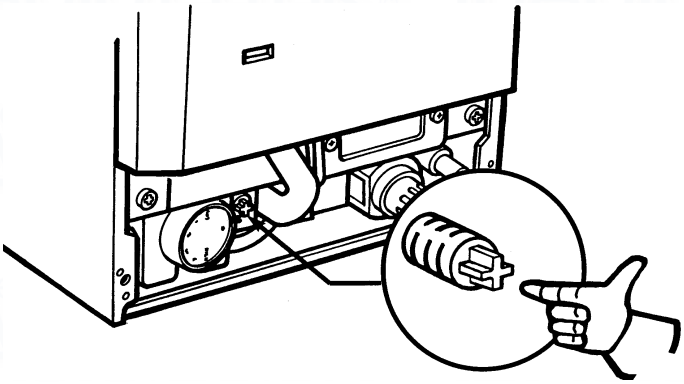

Reach into the outer case and locate the reset button adjacent to the control box. Press the button to reset the overheat thermostat.

The boiler must be reignited manually.

NOTE: Any interruption to the electricity supply may cause the device to operate.

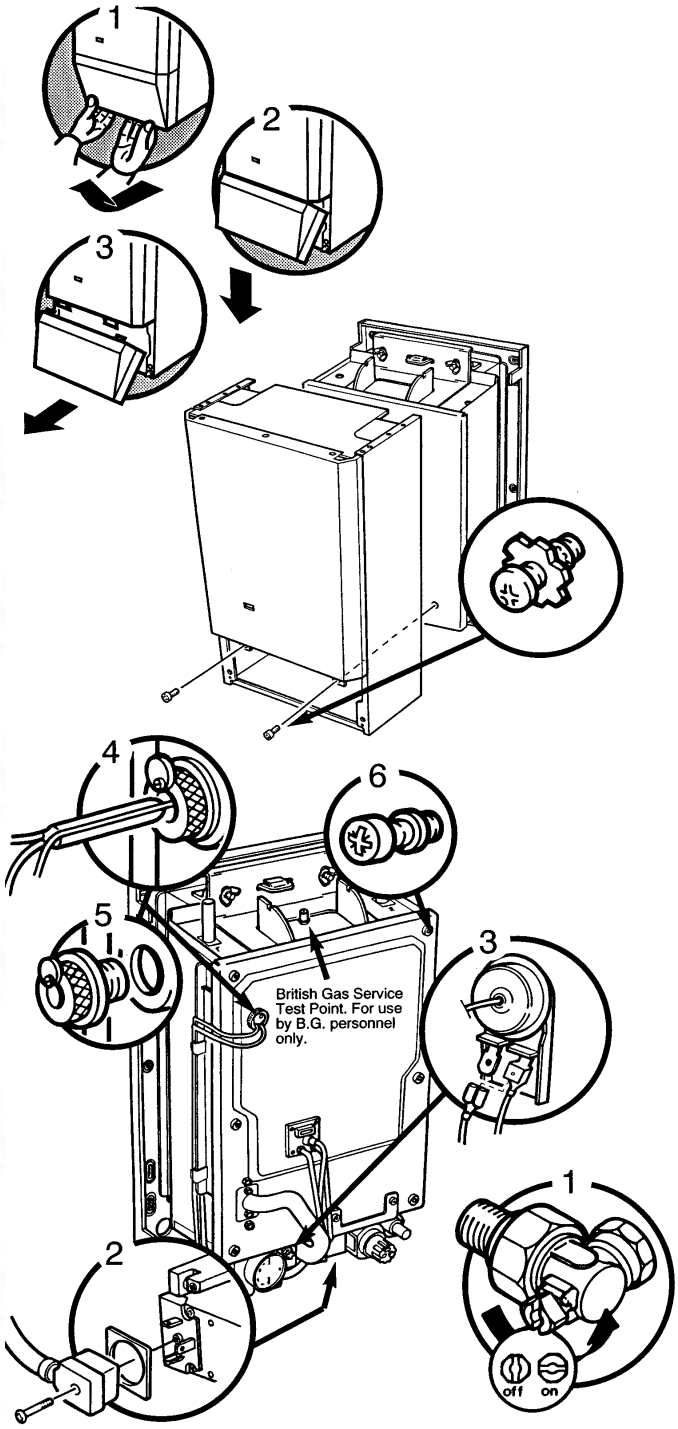

Dismantling the Boiler

To ensure the continued safe and efficient operation of the appliance, it is recommended that it is checked and serviced as necessary at regular intervals.

The frequency of servicing will depend upon the particular installation conditions and usage but in general once per year should be adequate. It is the law that all servicing work is carried out by a competent person such as British Gas or other CORGI registered personnel.

Before servicing please read the Important Information section on page 5.

After servicing, complete the relevant section of the “Benchmark” Installation, Commissioning and Service Record Log Book. This should be in the possession of the user.

ISOLATE THE ELECTRICAL SUPPLY TO THE BOILER.

Remove lower door panel following the sequence of diagrams.

To remove the outer case from the boiler, take out the two screws and washers. Draw outer case forward and clear of the boiler.

1. Turn off gas supply at the service tap and disconnect the union.

2. Disconnect the electrical plug on the gas valve by removing screw and pulling forward.

3. Disconnect the two wires from the overheat thermostat.

4. Loosen the screw on the capillary retaining washer, allowing the washer to move freely. Release the capillaries from the clips on the side of the combustion box. Remove both phials from the thermostat pocket.

5. Remove brass sealing plug with fibre washer.

6. Loosen the six screws sufficiently for the removal of the combustion chamber door.

Remove the combustion chamber door complete with the burner.

NOTE: When re-assembling, care must be taken to align the overheat thermostat capillary with the groove in the main thermostat phial.

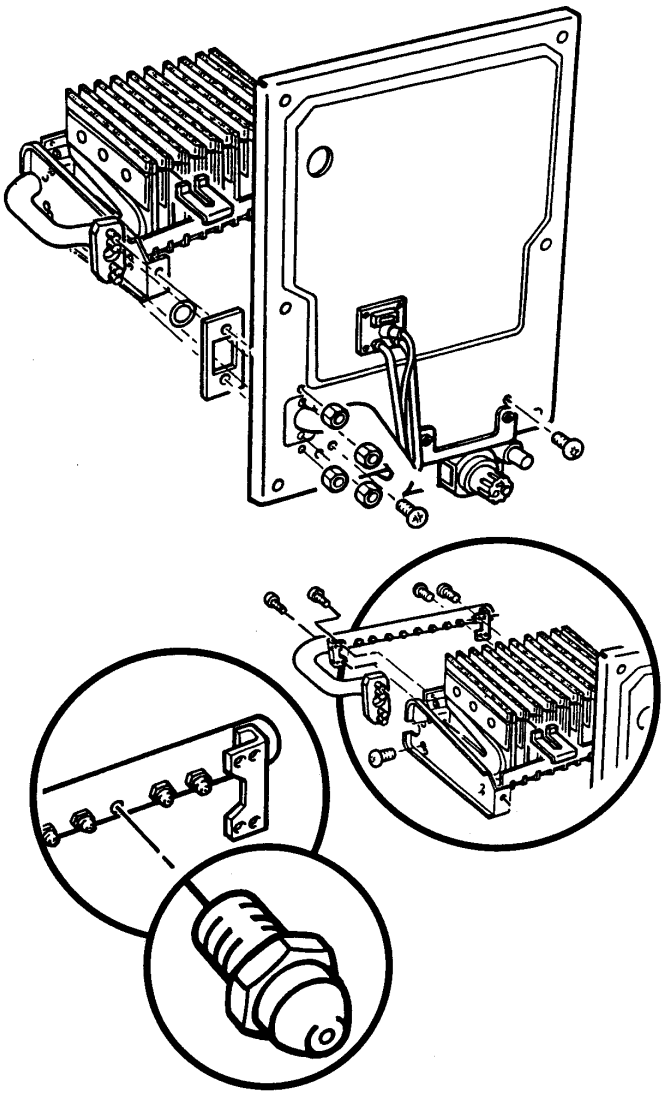

Cleaning the Burner/Injectors

Lightly brush any debris from top of burner blades and ensure that ports are free of obstructions.

Remove the two nuts fixing the burner manifold to the burner feed pipe.

Remove the two nuts fixing the burner manifold to the combustion chamber door.

Remove the two screws fixing the burner brackets to the combustion chamber door.

Remove burner assembly, (noting position of pilot shield) ‘O’ ring and gasket.

Remove the two screws fixing the mounting bracket.

Remove the four screws to separate the manifold from the blade assembly. Clean venturies.

Unscrew injectors, clean carefully and replace.

Check seal around the door and replace if necessary.

Reassemble burner to door and feed pipe, ensuring the pilot shield is in the correct position.

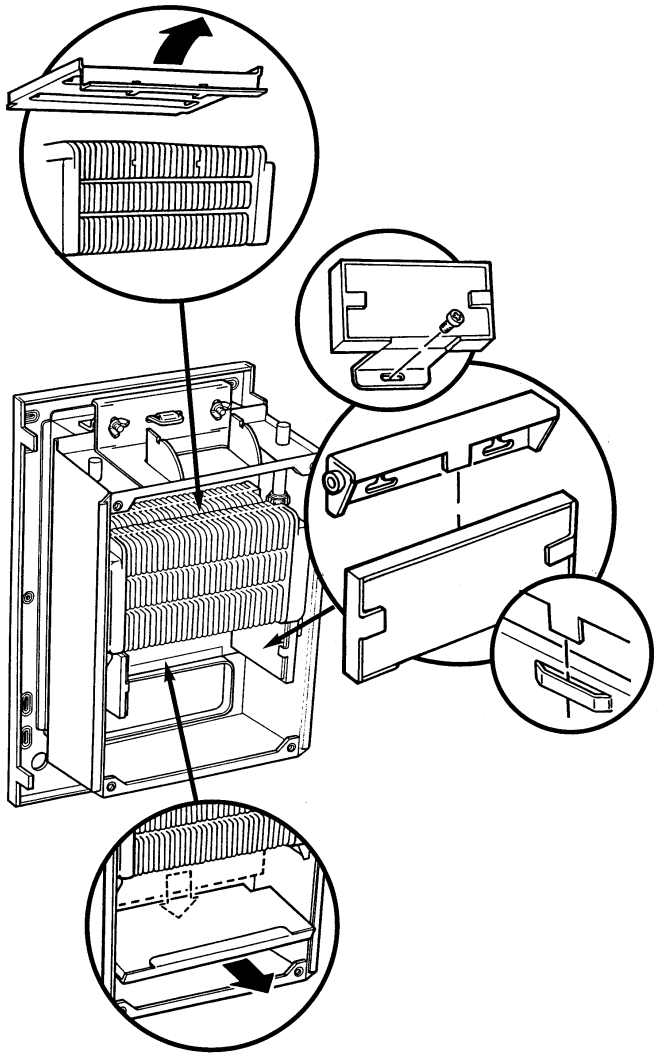

Cleaning the Combustion Box

Slide baffle forward (30, 40 and 50 models only).

Side insulation panels and rear insulation panel should be removed to avoid brush damage.

To remove side panel, remove one screw per panel.

Slide panel down and away from location.

Rear insulation panel can now be removed.

The heat exchanger can now be easily cleaned thoroughly. Remove any obstructions from flue outlet and air inlet. Remove dirt and debris from bottom of combustion box.

Reassemble all components in reverse order. Check burner setting pressure and gas rate. Recommission the boiler before use, checking for gas soundness and ensuring all controls are working correctly.

Complete the relevant section of the “Benchmark” Installation, Commissioning and Service Record Log Book and hand it back to the user.

Changing Components - Page 33

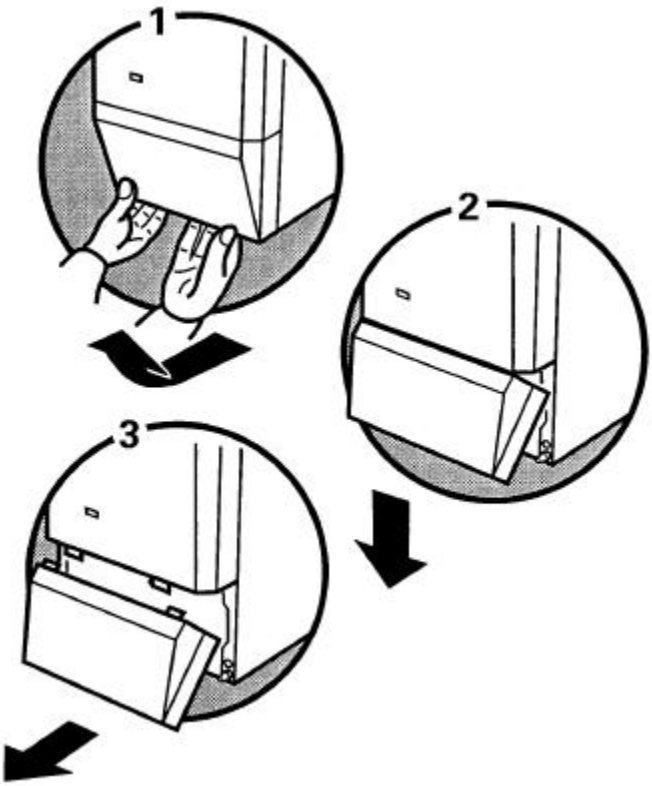

Before changing any components please read the Important Information section on page 5.

When changing components ensure that electrical and gas supplies are isolated before the work is started.

Remove the outer case lower door panel by following the sequence of diagrams.

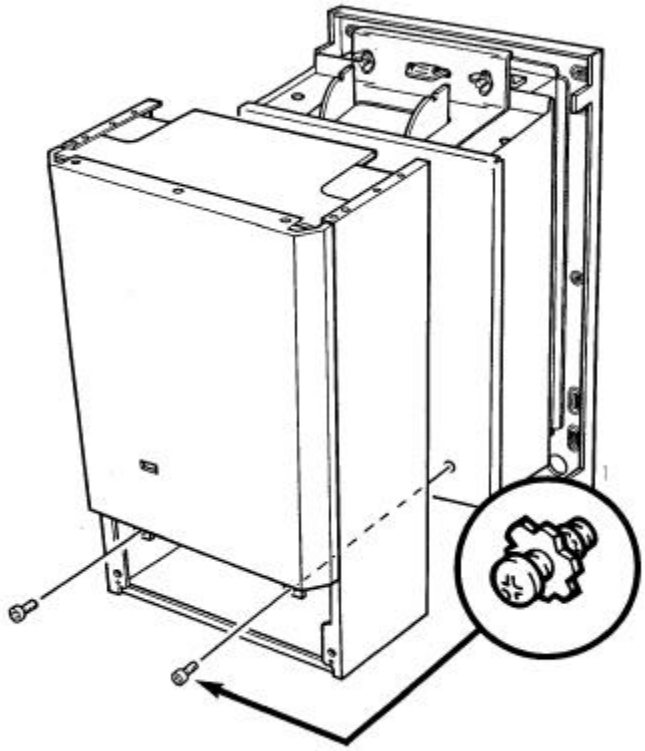

Remove the outer case from the boiler by unscrewing the two screws and washers, lift the case to clear the two hooks at the top of the combustion box. Draw the outer case clear of the boiler.

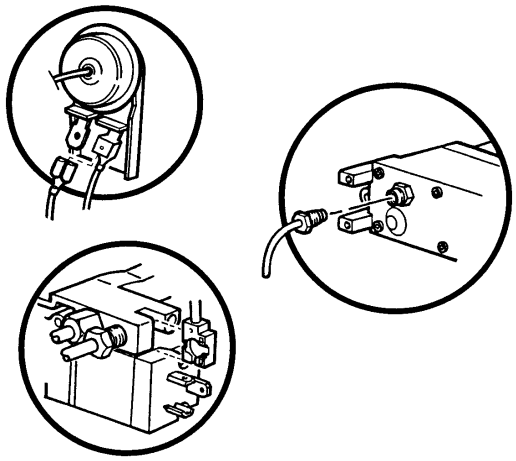

Eco Interrupter Leads

Disconnect the leads at the overheat thermostat.

One lead is removed by unscrewing the connection from the rear of the gas valve.

The other lead can be removed after slackening off the thermocouple connection at the gas valve.

Reassemble in reverse order.

CAUTION: Do not overtighten.

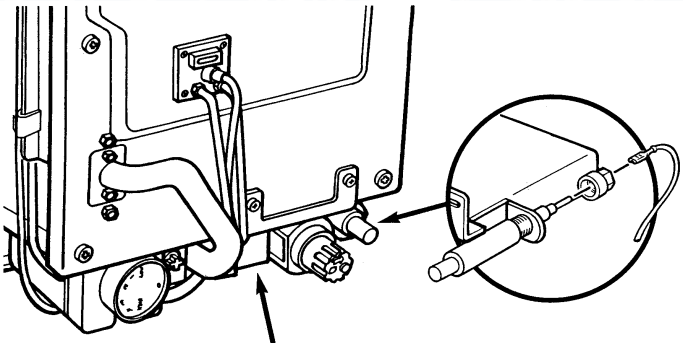

Piezo Igniter

Withdraw and disconnect electrode lead. Remove retaining nut holding piezo igniter to bracket. Exchange igniter for new and reassemble.

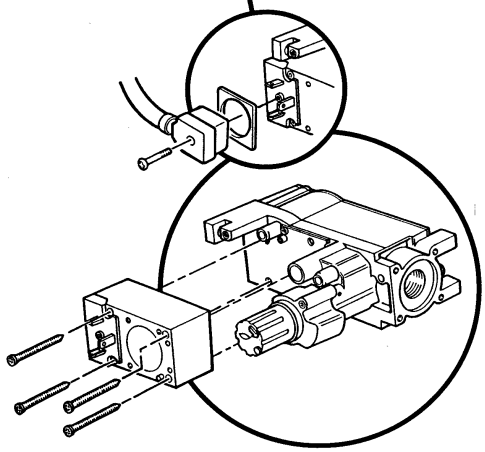

Solenoid Operator

Ensure electrical supply is isolated. Disconnect the electrical plug by removing the screw and pulling forward.

Remove solenoid operator by unscrewing fixing screws. Exchange solenoid for new and reassemble.

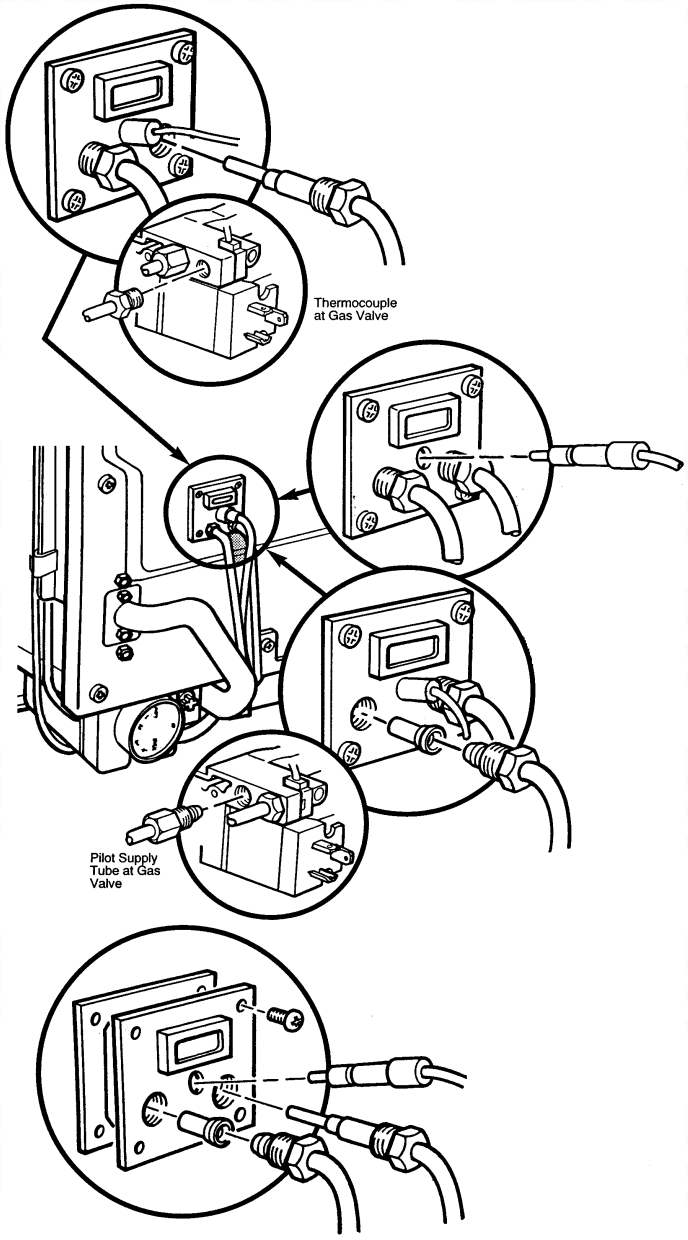

Thermocouple

Release nuts holding thermocouple in place. Bend new thermocouple to required shape, fit in place and tighten retaining nuts.

Caution: Do not overtighten nuts.

Spark Electrode & Lead

Unclip the electrode from the pilot bracket and remove lead from piezo igniter. Replace with new spark electrode ensuring it is fully engaged.

Pilot Injector

Disconnect nuts on pilot supply tube and remove. Extract injector, using a small screwdriver.

Fit new injector and reassemble:

Pilot Bracket & Gasket

Disconnect thermocouple, spark electrode and pilot feed pipe from pilot bracket.

DO NOT remove pilot viewing window. Carefully remove pilot injector.

Undo the four screws retaining the bracket to the door and remove. Check pilot gasket and replace if necessary.

Fit new pilot bracket. Reassemble in reverse order.

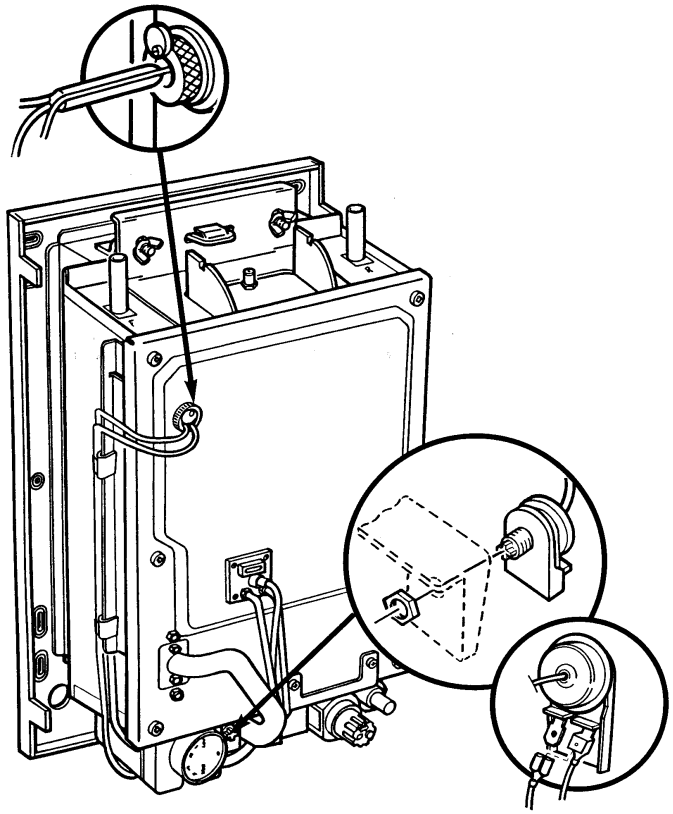

Overheat Thermostat

NOTE: On boilers converted for use with gravity D.H.W., the overheat thermostat will have been rendered inoperable and will never need changing.

Loosen the screw on the capillary retaining washer, allowing the washer to move freely. Free the capillaries from the clips on the left hand side of the combustion box. Withdraw the two thermostat phials from the thermostat pocket.

Remove the locknut and withdraw the overheat thermostat from the bracket.

Disconnect the two wires from the overheat thermostat and refit them to the new component.

Reassemble in reverse order. Care must be taken to align the overheat thermostat capillary with the groove in the main thermostat phial.

NOTE: The overheat thermostat capillary may be somewhat longer than necessary. Excess length should be tidied up by making a neat coil. Contact with the side of the combustion box should be avoided.

Reassemble all components in the reverse order to dismantling.

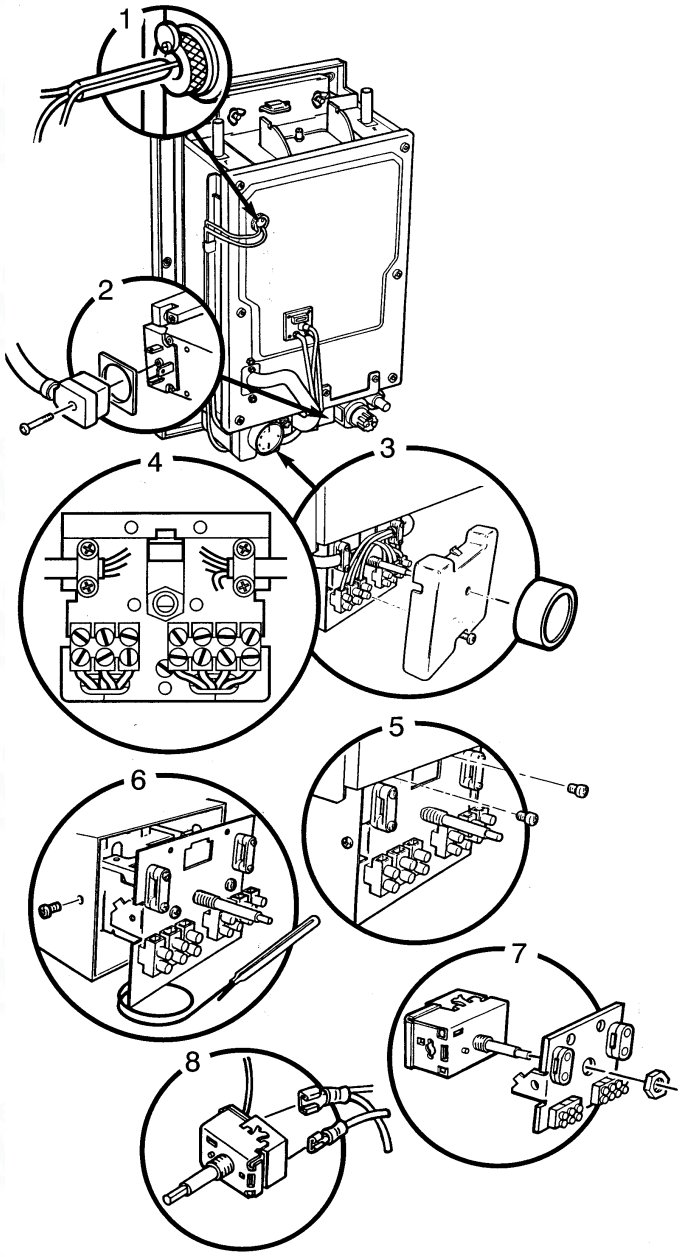

Main Thermostat

1. Loosen the screw on the capillary retaining washer, allowing the washer to move freely. Free the capillaries from the clips on the left hand side of the combustion box. Withdraw both thermostat phials from the thermostat pocket.

2. Disconnect the electrical plug and cable on the gas valve.

3. Carefully pull off the thermostat knob. Loosen the securing screw sufficiently for the electrical box cover to be removed, remove cover.

4. Disconnect the wires of the input and pump outlet cables from the terminal strips. Loosen the screws on the cable clamps. Boilers converted for use on gravity D.H.W. will have wiring only to the left hand terminal strip.

5. Unfasten the screws holding the thermostat box to its bracket on the boiler combustion box. The thermostat box is now free of the boiler.

6. Remove the rear part of the thermostat box by removing the screws at the side.

7. Release the locknut securing the main boiler thermostat to the mounting plate.

8. Pull off the spade connectors from the rear of the thermostat, taking note of their orientation. Remove thermostat taking care not to damage the PCB.

Fit the new thermostat to the mounting plate and reconnect the spade connectors to the appropriate terminals.

Reassemble all components in reverse order. (See pages 24 and 25 for electrical connections).

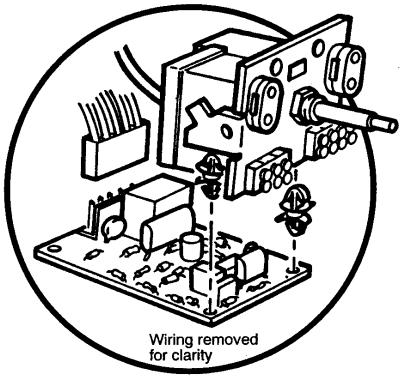

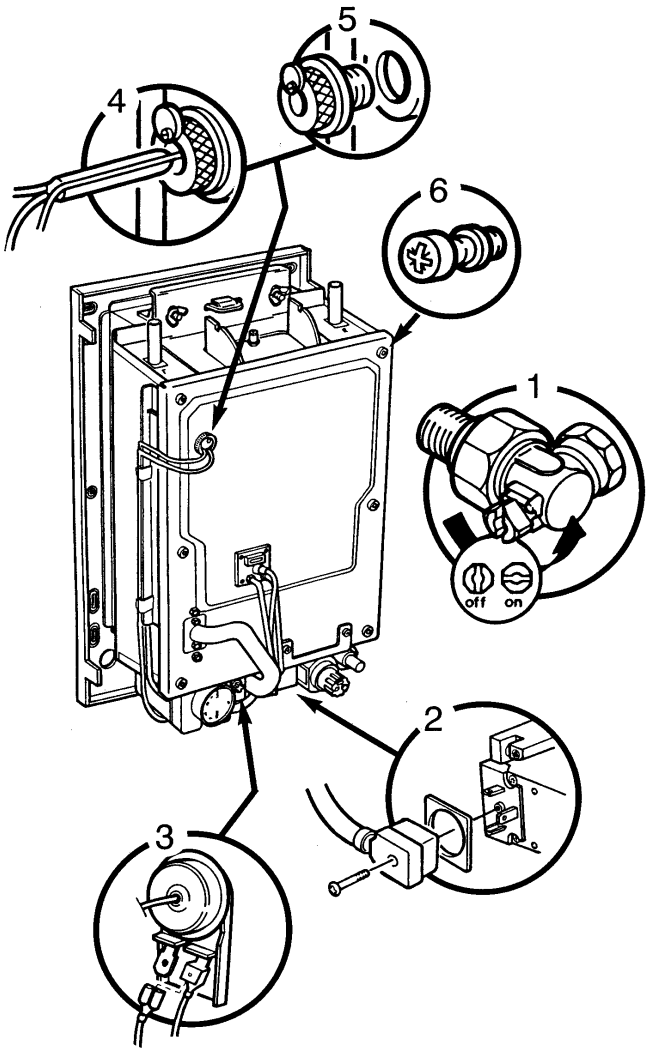

Pump Overrun Timer

To change circuit board proceed as if to change Main Thermostat 1 to 6 (page 37) then:

Disconnect the molex plug from the circuit board.

Remove the circuit board from the two supports.

Fit the new circuit board to the mounting plate and reconnect the molex plug.

Reassemble all components in reverse order.

Remove Combustion Chamber Door

To change burner, burner injectors, gas valve and insulation panels proceed as follows:

1. Turn off gas supply at the service tap and disconnect the union.

2. Disconnect the electrical plug on the gas valve by removing screw and pulling forward.

3. Disconnect the two wires from the overheat thermostat.

4. Loosen the screw on the capillary retaining washer, allowing the washer to move freely. Release the capillaries from the clips on the side of the combustion box. Remove both phials from the thermostat pocket.

Remove brass sealing plug with fibre washer.

Loosen the six screws sufficiently for the removal of the combustion chamber door.

Remove the combustion chamber door complete with the burner.

NOTE: When re-assembling, care must be taken to align the overheat thermostat capillary with the groove in the main thermostat phial.

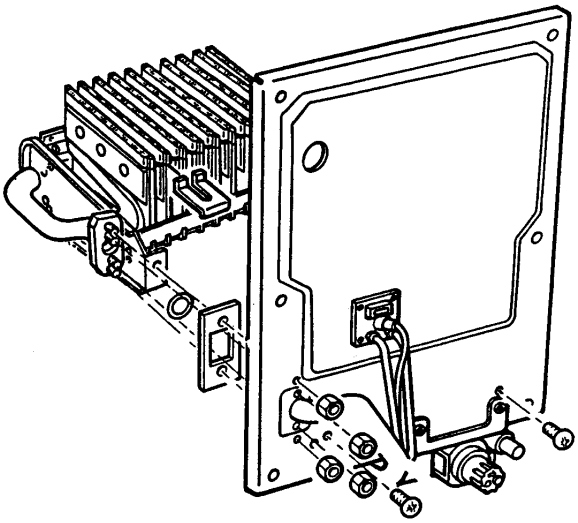

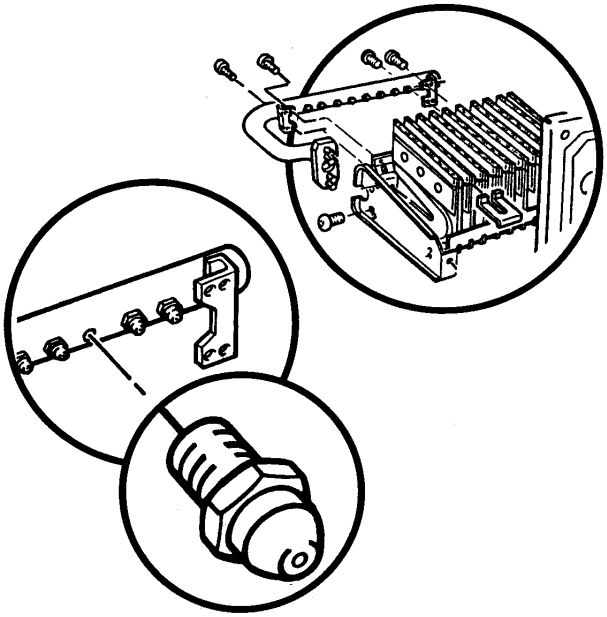

Burner and Injectors

Remove the two nuts fixing the burner manifold to the burner feed pipe.

Remove the two nuts fixing the burner manifold to the combustion chamber door.

Remove the two screws fixing the burner brackets to the combustion chamber door.

Remove burner assembly, (noting position of pilot shield) ‘O’ ring and gasket.

Check the ‘O’ ring and gasket, replace if necessary.

A replacement burner can be fitted by reassembling in reverse order ensuring that the pilot shield is refitted in the correct position.

If only the injectors are being replaced then proceed as follows:

Remove the two screws fixing the mounting brackets.

Remove the four screws to separate the manifold from the blade assembly.

Unscrew injectors and fit new ones.

Reassemble the burner and attach to controls door in reverse order.

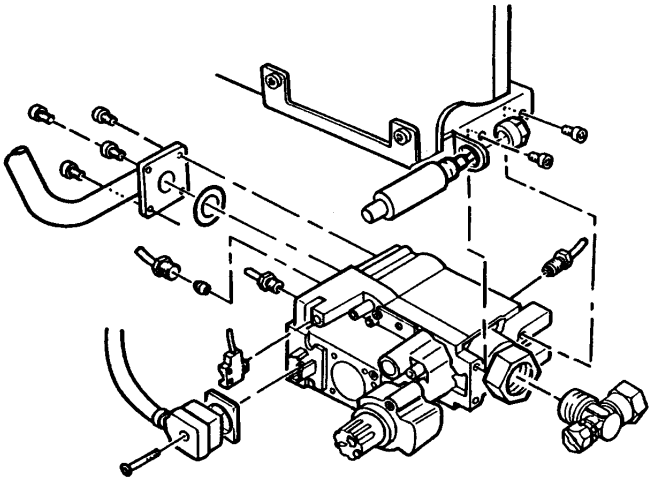

Gas Valve

The gas valve fitted to the appliance is of the stepped ignition type.

Release fixing nuts on pilot feed pipe and thermocouple at gas valve which releases the Eco interrupter.

Remove screws holding burner feed pipe to gas valve.

Remove the piezo igniter assembly.

Remove screws on gas valve inlet support bracket.

Remove gas valve. Undo Eco interrupter from rear of valve.

Fit new gas valve and reassemble using the “O” ring from the original valve. If however the “O” ring has become damaged or worn, replace.

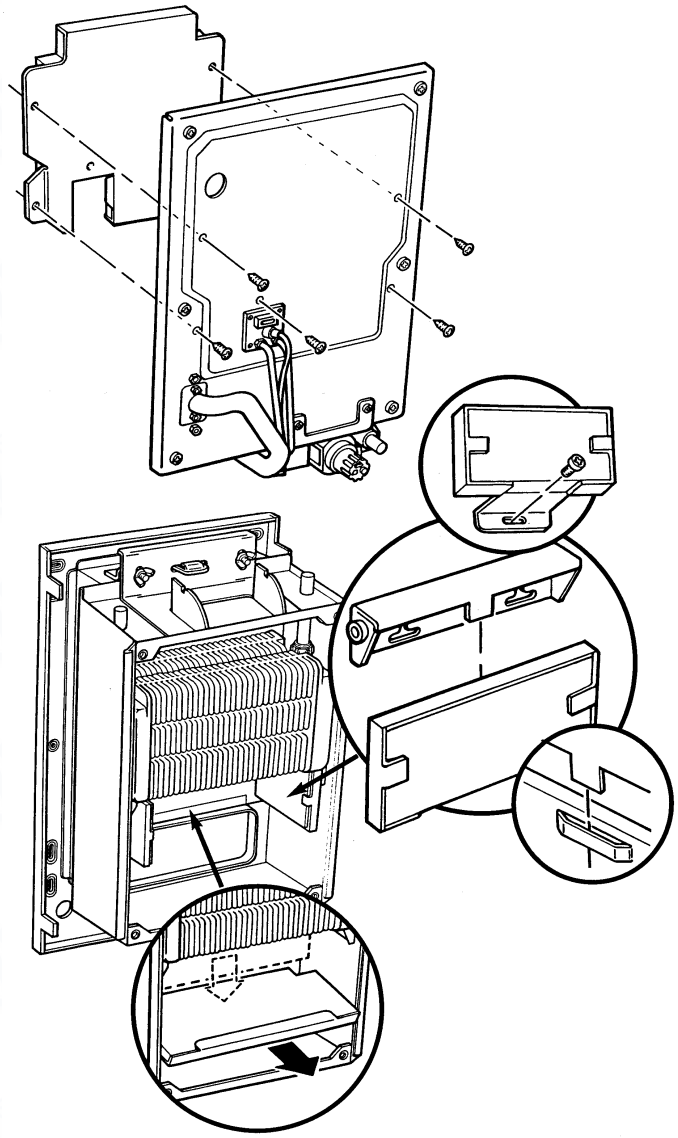

Insulation Panels

To replace the combustion chamber door insulation undo the five screws holding the insulation carrier assembly in place.

Replace with new carrier assembly and reassemble in reverse order.

To replace side insulation panels remove fixing screws.

Slide panel down and away from location. Fit new side insulation panel and reassemble in reverse order.

To replace rear insulation panel, remove the side insulation panels by removing fixing screws. Slide rear insulation panel down and away from location. Fit new rear insulation panel and reassemble in reverse order.

Gas Leak

SYMPTOM	POSSIBLE CAUSES
Gas leak at joint on valve body on soap solution test.	Loose screws at joints or fittings - defective "O" ring - damaged valve casting at joint - defective burner feed pipe.

Burner

SYMPTOM	POSSIBLE CAUSES
Pilot on but burner will not ignite.	External controls or boiler thermostat not calling for heat - blown fuse - defective power supply or external controls - solenoid open circuit (test for continuity at solenoid terminals) - injector blocked - inadequate gas supply - faulty gas valve.
Pilot established and main burner will ignite but system liable to nuisance shut - down.	Dirty or loose thermocouple connections - defective thermocouple - defective flame safety magnet - incorrect or faulty wiring - overheat cut-off device defective - adverse wind conditions - incorrectly fitted terminal - partially blocked pilot injector.
Main burner will not shut down in response to external controls.	Short circuit in external controls or wiring - defective solenoid - faulty main thermostat. (Check continuity between S/L on terminal strip and 1 (L) on plug on gas valve.)
Main burner pressure incorrect.	Throttle screw requires adjustment - (after adjustment recheck pressure).

Overheat Thermostat

SYMPTOM	POSSIBLE CAUSES
Overheat cut-off device operates repeatedly.	System temperature higher than design temperature - main thermostat faulty - overheat thermostat faulty - central heating pump not functioning correctly - pump overrun timer faulty - no by-pass - by-pass closed - installation fault - no permanent live - pump not wired to boiler - incorrect use i.e. turning off at isolation switch.
Overheat thermostat reset but boiler cannot be reignited.	Thermocouple damaged - connections between thermocouple, overheat thermostat and gas valve faulty or poor - overheat thermostat faulty.

Pilot

SYMPTOM	POSSIBLE CAUSES
Pilot will not light.	Main gas tap off - ignition restart interlock is still engaged - gas control knob not fully depressed - pilot feed not purged of air - pilot feed blocked - pilot injector blocked - electrode lead or ignitor faulty - overheat cut-off device has operated - if on gravity, overheat thermostat wires may not be piggybacked.
Pilot established when gas control knob released but pilot flame does not fully envelop the thermocouple.	Incorrect or faulty pilot injector fitted - pilot injector partially blocked.
Pilot lights but goes out when gas control knob is released.	Gas control knob released too soon - dirty or loose connections - defective thermocouple or flame safety magnet - overheat cut-off device activated - partially blocked pilot injector.
Main burner will ignite but pilot flame is immediately extinguished.	Incorrect pilot injector - gas supply too small or restricted - adverse wind conditions - incorrectly fitted terminal - partially blocked pilot injector.

Short Parts List - Page 42

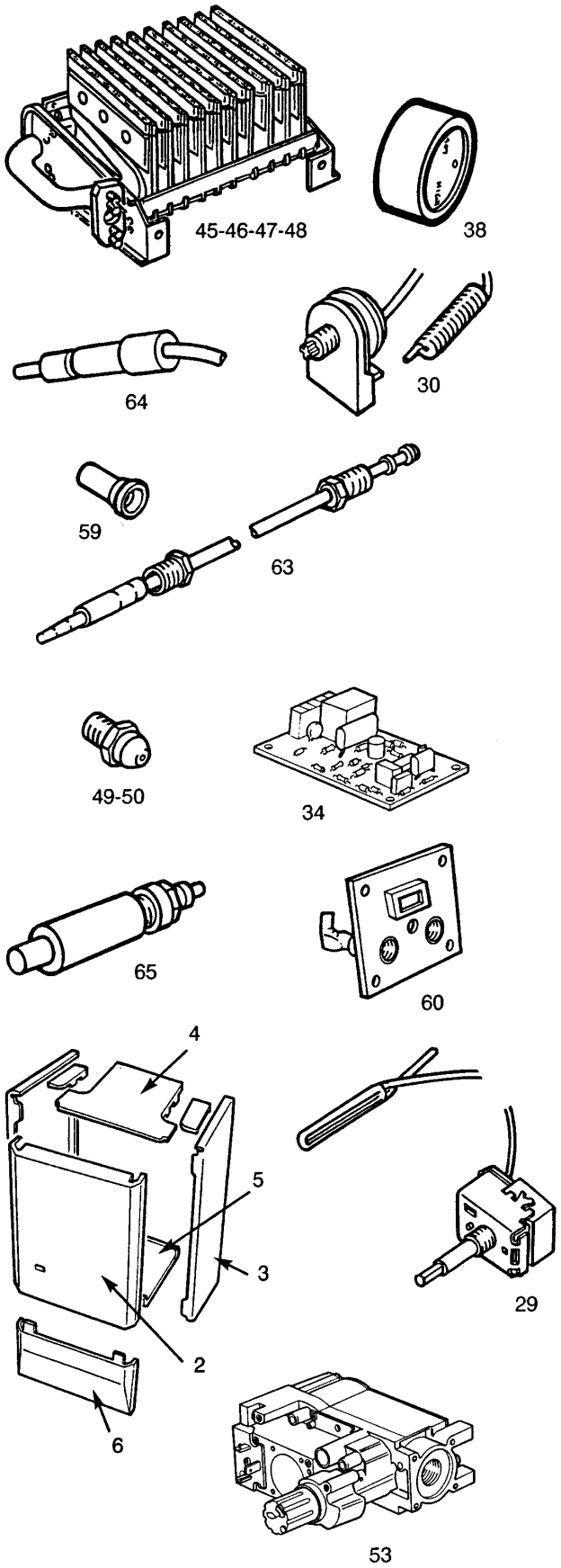

Key	Description	Model	G.C.N°	Manuf'rs Part N°
2	Panel Front	All models	364 983	233700
3	Panel Side (2 off)	All models	364 984	230675
4	Panel Top	All models	170 508	231770
5	Panel Bottom	All models	364 986	230690
6	Panel Door Lower Assy	All models	364 987	232111
53	Valve Honeywell (Stepped Ignition)	All models	E04 788	241857
49	Injector Boiler	30-40-50	364 989	232446
50	Injector Boiler	60	364 990	232445
45	Burner Boiler	30	170 530	232515
46	Burner Boiler	40	170 531	232514
47	Burner Boiler	50	170 532	232513
48	Burner Boiler	60	170 533	232512
60	Burner Pilot Assy	All models	379 300	233122
59	Injector Pilot	All models	379 301	232150
63	Thermocouple	All models	379 302	232159
64	Electrode Pilot Ign	All models	379 303	232151
29	Thermostat Boiler	All models	379 306	232156
38	Knob Thermostat	All models	364 988	232171
30	Thermostat Overheat	All models	379 305	231825
34	Pump Overrun Circuit	All models	170 525	232510
65	Kit Spark Generator	All Models	183 936	040456

Click here for Helplines