Baxi Wentworth PCF Classic
Baxi Kingston 2 PCF Classic
Baxi Belmont 2

Please leave these instructions with the user

Live Fuel Effect Inset Gas Fires

Comp N° 243046 - Iss 4 – 6/00

Installation and Servicing Instructions

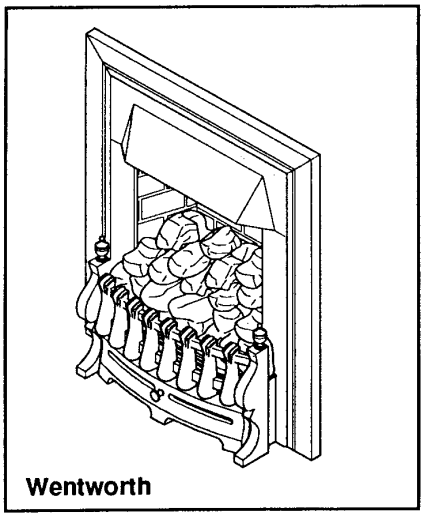

Wentworth

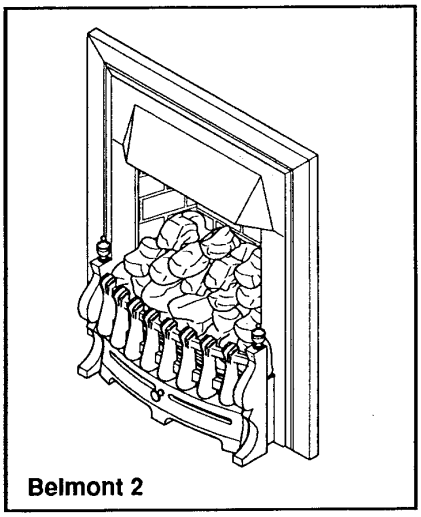

Belmont 2

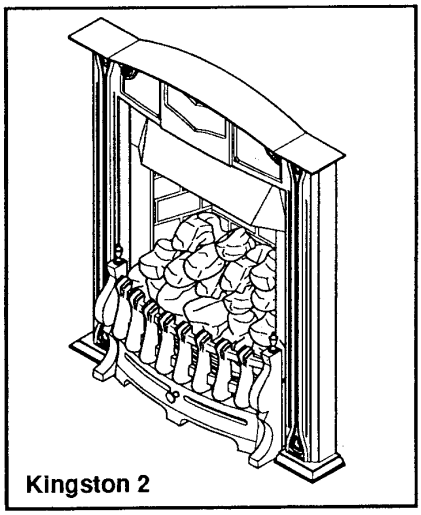

Kingston 2

BAXI

IBASIS.CO.UK spares & parts online

Natural Gas

Baxi Wentworth PCF Classic
G.C. N° 32 075 13A

Baxi Kingston 2 PCF Classic
G.C. N° 32 075 19A

Baxi Belmont 2
G.C. N° 32 075 22

Baxi Limited is one of the leading manufacturers of domestic heating products in the UK.

Our first priority is to give a high quality service to our customers. Quality is built into every Baxi product -products which fulfil the demands and needs of customers, offering choice, efficiency and reliability.

To keep ahead of changing trends, we have made a commitment to develop new ideas using the latest technology - with the aim of continuing to make the products that customers want to buy.

Baxi is also the largest manufacturing partnership in the country. Everyone who works at the company has a commitment to quality because, as shareholders, we know that satisfied customers mean continued success.

We hope you get a satisfactory service from Baxi. If not, please let us know.

For use in GB / IE only.

Baxi is a BS-EN ISO 9001 Accredited Company

Contents - Page 3

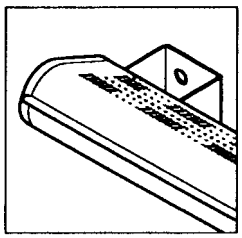

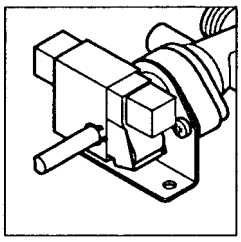

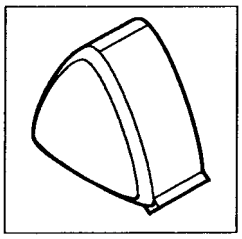

Section		Page
1.0	Introduction	4
2.0	Technical Data	6
3.0	Site Requirements	7
4.0	Installation	11
5.0	Commissioning the Fire	13
6.0	Arranging the Coals	14
7.0	Checking for Spillage	17
8.0	Fitting the Trim & Fender	18
9.0	Annual Servicing	19
10.0	Changing Components	23
11.0	Short Parts List	27

Fire Box Contents

Literature Pack	
Fire Assembly	
Coalbed Pack	(Boxed)
Fret	(Boxed)
Trim	(Boxed)
Installation Kit	(Foam Tape, Screws, Cable Ties)

1.0 Introduction – Page 4

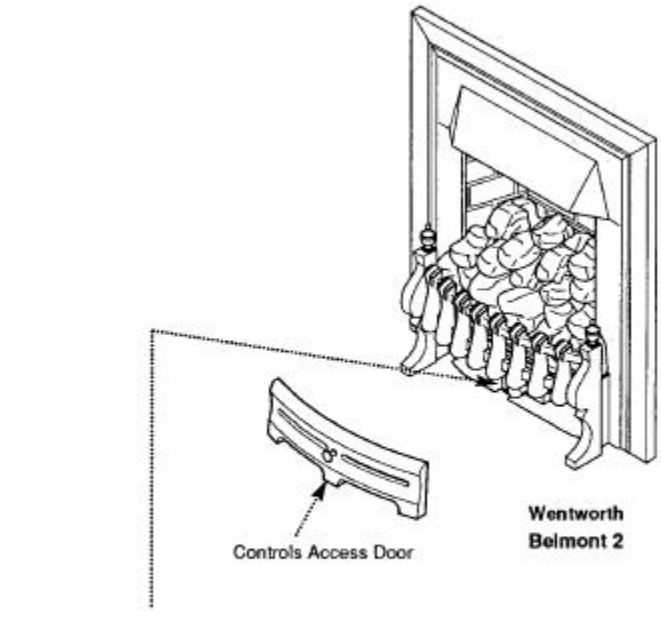

Fig. 1

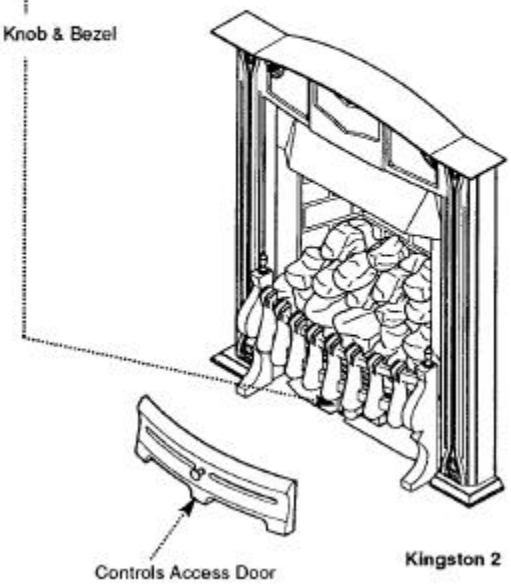

1.1 Description

1. The Baxi Wentworth PCF, Kingston 2 PCF Classic or Belmont 2 are live fuel effect inset gas fires designed to be used on Natural Gas only at a setting pressure of 20 mbar.

2. The appliances are designed to give a maximum heat output of 3.8 kW (13,000 Btu/h).

3. The fire is controlled by a knob which is positioned behind the controls access door on the fender assembly (Fig. 1). The knob has four positions:

Position	●	OFF
Position	★	Ignition
Position		Minimum Output
Position		Maximum Output

4. A special feature of the Baxi Wentworth and Kingston 2 is the direct acting oxygen depletion system. This system will shut down the appliance if there is inadequate ventilation and the chimney is not clearing the products of combustion. **Under no circumstances shall this device be adjusted, bypassed or put out of action.** The device must be regularly serviced and strictly in accordance with these instructions.

1.2 Important Information

This product contains Refractory Ceramic Fibres (R.C.F.) which are man-made vitreous silicate fibres. Excessive exposure to these materials may cause temporary irritation to eyes, skin and respiratory tract. Care must be taken when handling these articles to ensure the release of dust or fibres is kept to a minimum. To ensure that the release of fibres from these articles is kept to a minimum, during installation and servicing it is recommended that a H.E.P.A. filtered vacuum is used to remove any dust, soot or other debris accumulated in and around the appliance. This should be performed before and after working on the installation. It is recommended that any replaced item(s) are not broken up but sealed within heavy duty polythene bags and clearly labelled “R.C.F. waste”. This is not classified as “hazardous waste’ and may be disposed of a tipping site licensed for the disposal of industrial waste. Protective clothing is not required when handling these articles but it is recommended that gloves are worn and the normal hygiene rules of not smoking, eating or drinking in the work area are followed and always wash hands before eating or drinking.

1.0 Introduction – Page 5

Notice

Discolouration of wall surfaces

Most heating appliances generate warm air convection currents and transfer heat to any wall surface against which they are situated.

Some soft furnishings (such as blown vinyl wallpapers) may not be suitable for use where they are subject to temperatures above normal room levels and the manufacturer's advice should be sought before using this type of wall covering adjacent to any heating appliance.

The likelihood of wall staining from convected air currents will be increased in environments where high levels of tobacco smoke or other contaminants exist.

1.3 Installation

1. The appliance is suitable for installation only in G.B. and I.E. and should be installed in accordance with the rules in force. For Ireland install in accordance with I.S.813 "Installation of Gas Appliances". The installation must be carried out by a Corgi Registered Installer or other competent person and be in accordance with the relevant requirements of Gas Safety (Installation and Use) Regulations 1998 (as amended), the Building Regulations issued by the Department of the Environment, Building Standards (Scotland) (Consolidation) Regulations issued by the Scottish Development Department and the Local Building Regulations. Where no specific instructions are given, reference should be made to the relevant BRITISH STANDARD CODES OF PRACTICE and Installation Specifications.

2. This appliance must be installed in accordance with the manufacturers instructions and the rules in force and only used in a suitably ventilated location.

3. Read the instructions before installing or using this appliance.

4. The chimney should be swept before the appliance is installed and checked annually to ensure continued clearance of combustion products and that there is no excessive build up of soot.

5. Soot and debris from the chimney or other sources should periodically require removal by a competent person.

6. Any purpose provided ventilation should be checked periodically to ensure that it is free from obstruction.

7. Ensure that all protective plastic coating is removed from trim and fender parts.

1.4 B.S. Codes of Practice

STANDARD	SCOPE
B S 6891	**Gas Installation**
B S. 5440: Pt 1	**Flues**
B S. 5440: Pt 2	**Air Supply.**
B S. 5871: Pt 2	**Installation of inset live fuel effect fires**
B S. 715	**Specification for metal flue pipes, fittings etc.**
B S. 1251	**Open fireplace components**
B S. 6461:Pts 1 &2	**Masonry chimneys.**

2.0 Technical Data – Page 6

Kingston 2 PCF Classic		
Category of Appliance I_{2H} The fire is set for Gas Type G20 at 20mbar.		
Heat Input (net)	High	Min
KW	6.16	2.4
Btu/h	21,018	8,200
Heat Output	High	
KW	3.8	
Btu/h	13,000	
Inlet Setting Pressure		Cold
	mbar	20 ± 1.0
	in wg	8 ± 0.4
Gas Connection	8mm OD tube, rigid or semi rigid and 8mm compression fitting at appliance inlet	
Controls &Safety system	Rotary gas tap with direct burner ignition, flame failure device and direct acting oxygen depletion system.	
Gas Rate (after 10 mins)	0.65 m^3/h (23.0 ft^3/h)	
Lifting Weight	28.5 kg (63 lbs)	
Injector	Cat 127/440	
Trim Dimensions	Height	655mm
	Width	560mm
	Depth (from the wall)	125mm

Wentworth PCF Classic		
Category of Appliance I_{2H} The fire is set for Gas Type G20 at 20mbar.		
Heat Input (net)	High	Min
KW	6.16	2.4
Btu/h	21,018	8,200
Heat Output	High	
KW	3.8	
Btu/h	13,000	
Inlet Setting Pressure		Cold
	mbar	20 ± 1.0
	in wg	8 ± 0.4
Gas Connection	8mm OD tube, rigid or semi rigid and 8mm compression fitting at appliance inlet	
Controls &Safety system	Rotary gas tap with direct burner ignition, flame failure device and direct acting oxygen depletion system.	
Gas Rate (after 10 mins)	0.65 m^3/h (23.0 ft^3/h)	
Lifting Weight	15.6 kg (34.32 lbs)	
Injector	Cat 127/440	
Trim Dimensions	Height	601mm
	Width	512mm
	Depth (from the wall)	125mm

3.0 Site Requirements – Page 7

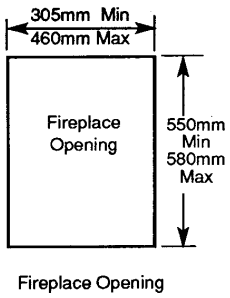

Fig. 2

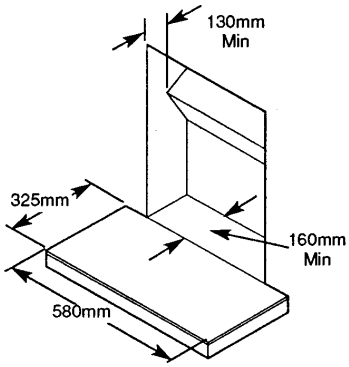

Fig. 3

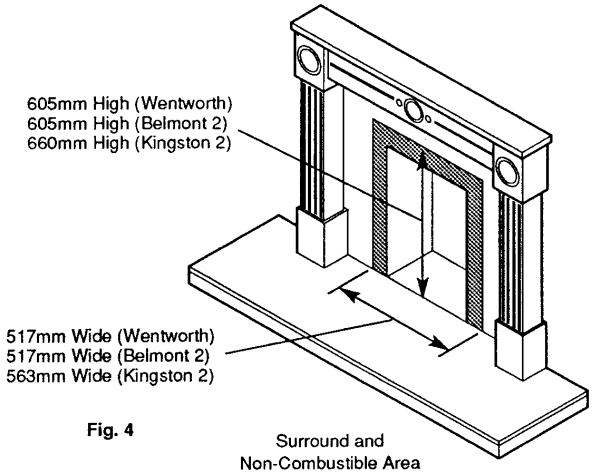

Fig. 4

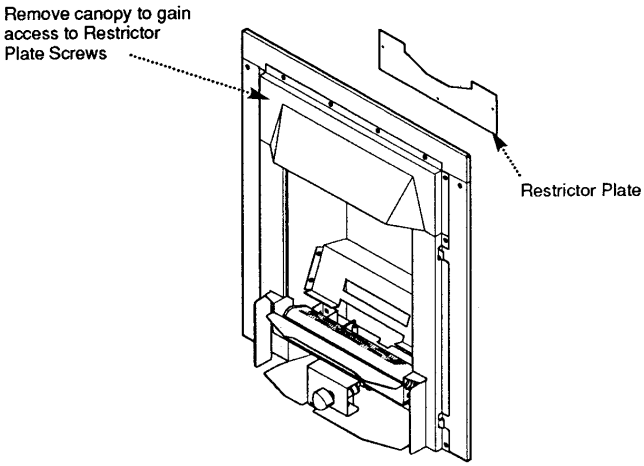

Fig. 5

3.1 Site Requirements

1. The Baxi Wentworth PCF, Kingston 2 PCF Classic or Belmont 2 gas fires can be fitted to an installation with the following flue systems:

- Pre-cast
- Fabricated steel
- Conventional brick or stone

3.2 Ventilation

1. No purpose provided ventilation is normally required for the appliance, normal adventitious room ventilation being sufficient. Reference should be made to BS 5871 Part 2. For Ireland refer to IS 813 Section 10 of the Irish Ventilation Requirements.

3.3 Masonry Flues

1 Any chairbrick must be removed if necessary to achieve the minimum depth. The fireplace opening must be a minimum of 305mm (12 in) wide (Fig. 2).

2. A conventional brick or stone chimney must have minimum effective cross-sectional dimension of 225mm x 225mm (9 in x 9 in) or be a lined flue of minimum diameter 125mm (5 in). The liner should be terminated at the top of the builders opening and sealed from the chimney. The minimum depth is shown in Fig. 3. If necessary remove either the knee or the whole chairbrick.

3. The fireplace must have a flat vertical surface measuring 605mm (23 $^{13}/_{16}$ in) high by 517mm (20 $^{1}/_{8}$ in) wide (Wentworth, Belmont 2) or 660mm (26in) high by 563mm (22 $^{5}/_{32}$ in) wide (Kingston 2), centrally placed about the opening. This allows an effective seal to be made between the wall and fire. **Also this area must be of non-combustible material**. If a fire surround is to be fitted its rear section must meet the same requirements. Any gaps between .the wall and surround must be sealed (Fig. 4).

3.4 Pre-cast Flues

1. The appliance is suitable for installation with a pre-cast flue block system conforming with B.S. 1289 Parts 1 &2.

2. The opening must be a minimum of 110 mm (4 $^{21}/_{64}$ in) deep and 305 mm (12 in) wide. It must be between 550 mm (21 $^{21}/_{32}$ in) and 580 mm (22 $^{27}/_{32}$ in) high.

3. The restrictor plate must be removed from the appliance (Fig. 5). Remove the fire canopy to gain access to restrictor plate screws. Remove the restrictor and replace the canopy taking care not to damage any painted surfaces.

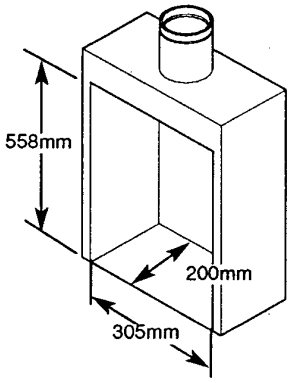

Fig. 6

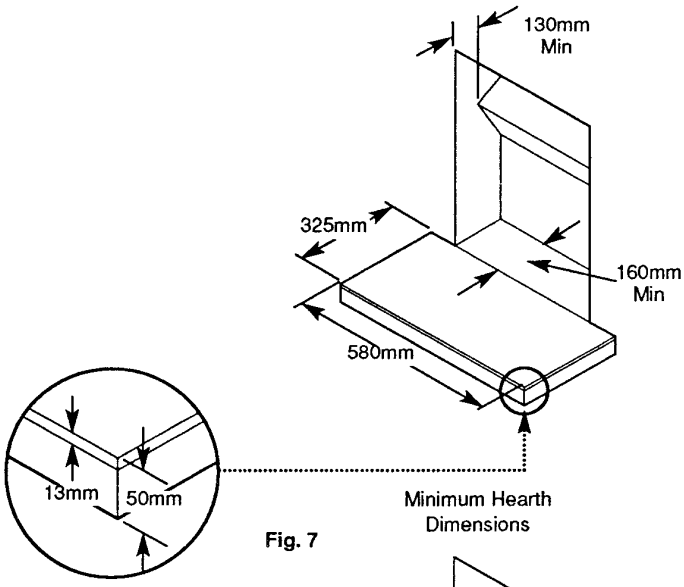

Minimum Hearth Dimensions

Fig. 7

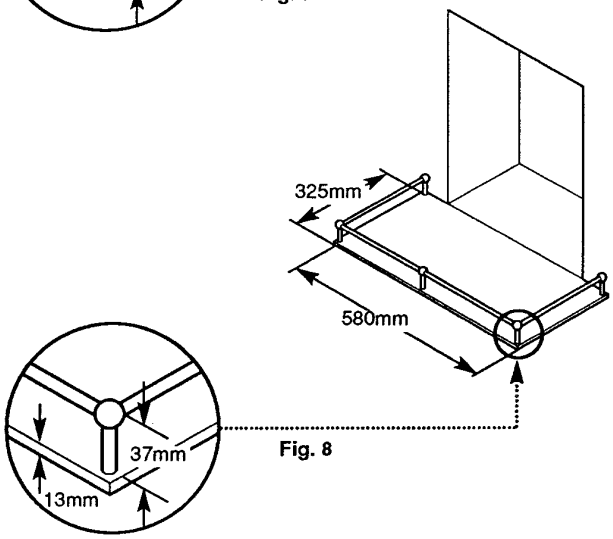

Fig. 8

3.5 Twin Walled Metal Flue Boxes

1. A double walled metal flue system conforming to the constructional requirements of BS 715 with a minimum internal flue diameter of 125mm (5in) should be used. The flue box should be of the Selkirk LFE 125 type or similar.

2. **Remove the restrictor plate from the fire before fitting to this type of flue** (Fig. 5).

3. The metal flue box must stand on a non-combustible base of a minimum thickness of 50mm (2 in) and a separate non-combustible hearth should be supplied with minimum dimensions as under Hearth Mounting.

4. The metal flue box must be located so that the sides, top and back surfaces have a minimum air gap clearance of 50mm from any combustible material.

5. A fitting kit (Baxi Part No.240125) is required to complete the installation. Further instructions are supplied with kit.

3.6 Hearth Mounting

1. The fire is intended to be hearth mounted only. The hearth must be of a non-combustible material at least 13mm (½ in) thick and measuring at least 325 mm (1 2 $^{7}/_{8}$ in) deep by 58Omm (22 $^{27}/_{32}$ in) wide. It must be fitted central to the fireplace opening. The top surface of the hearth should be a minimum of 50mm (2 in) above floor level (Fig. 7).

2. On no account should the fire unit be fitted directly onto a combustible floor or carpet.

3. Alternatively, a fender rail or upstanding edge of 50mm (2in) height can be fitted to the periphery of the 13mm (½ in) non-combustible hearth (Fig. 8).

3.7 Purpose Built Hearths & Surrounds

1. Purpose built superimposed fire resistant hearths and back panels specified as suitable by the manufacturer may be used, or a suitable propriety fire surround with 150º C rating.

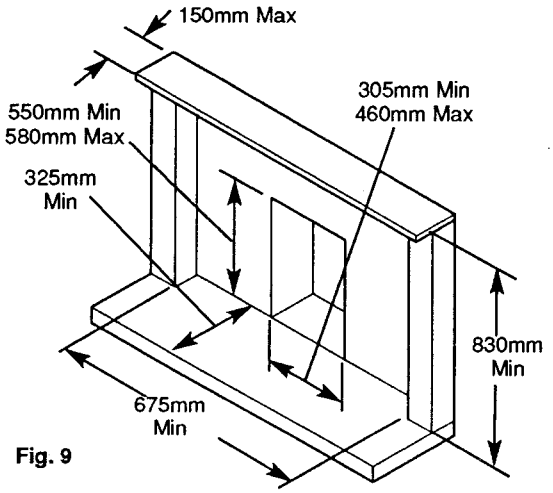

Fig. 9

3.8 Clearances (Fig. 9)

1. **Shelf Clearance** - minimum clearance from the hearth to the underside of a combustible shelf should be 830mm (32 $^{21}/_{32}$ in) provided the shelf depth is 150mm (5 $^{29}/_{32}$ in) or less. When the shelf depth is increased by increments of 12.5mm (1$^{5}/_{32}$ in) greater than 150mm (5 $^{29}/_{32}$ in) add 25mm (1 in) to the 830mm (32 $^{21}/_{32}$ in).

2. **Side of Fire** - minimum width between the vertical sides of combustible surround should not be less than 675mm (26 $^{5}/_{16}$ in) provided the fire is central to the surround and the sides do not project more than 150mm (5 $^{29}/_{32}$ in). When the vertical side forward projection is increased by 12.5mm (1$^{5}/_{32}$ in) add 50mm (2 in) to the inside width of the surround. **NOTE:** When the fire is fitted, this gives a minimum side clearance of 150mm (5 $^{29}/_{32}$ in).

3.9 Existing Chimneys & All Flue Systems

1. A chimney which has previously been used to burn solid fuel MUST be swept before beginning the installation. Any restrictions such as dampers or register plates must be removed or disabled. Minimum equivalent height of 3 metres.

2. It must serve one appliance only and not have branches or traps which could impede natural draught.

3. It essential that a positive flue pull up the chimney is present.

4. If a terminal is fitted it must be suitable for the purpose.

5. If there is no positive airflow up the chimney **DO NOT FIT THE FIRE**. Seek expert advice before continuing with the installation. A positive flue pull can be detected by holding a lighted match or taper near to the fireplace opening (Fig. 10).

6. The fireplace recess must be of non-combustible material. Any existing underfloor air supply must be sealed completely.

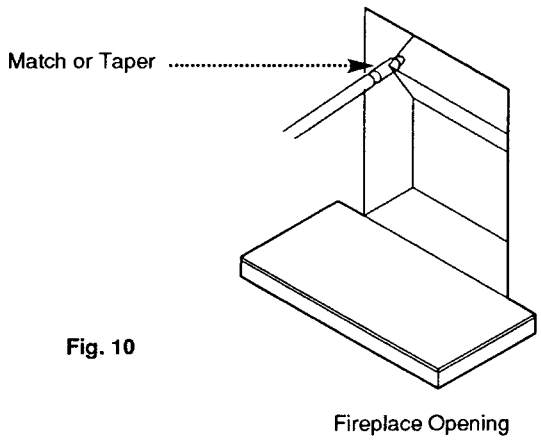

Fig. 10

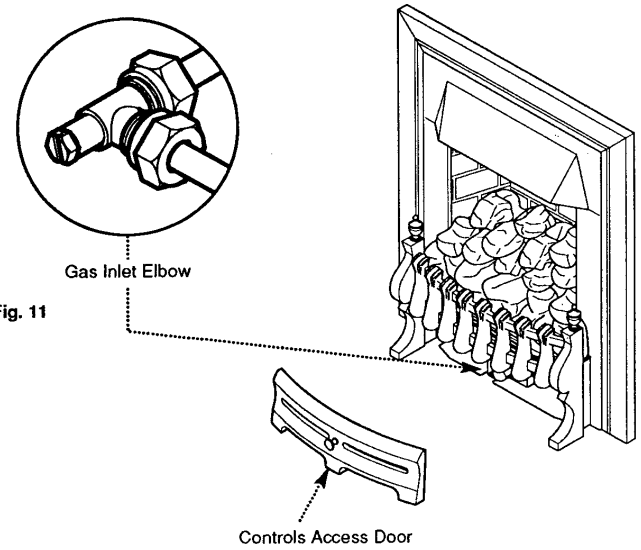

Fig. 11

3.10 Gas Supply & Connection

1. The gas supply is to be connected to the appliance as a concealed fix from the rear.

Turn off any appliances that are fed by the meter and isolate the gas supply by turning off at the meter.

2. The supply is to be a concealed connection, it is advisable to route the supply to the left side of the unit taking into account the requirements of BS 6891:1988 dealing with enclosed pipes. An 8mm restrictor elbow can be positioned under the fire on the left hand side with a compression connection at each outlet. The pipe can then be routed to the inlet elbow. (Fig. 11)

3. When running the gas supply from the rear it is necessary to remove the grommet from the larger hole in the fire back panel. The grommet must be cut in order to accommodate the gas pipe and replaced as in Fig. 12.

4. A suitable isolating cock should always be fitted in the supply feed to the fire to facilitate servicing.

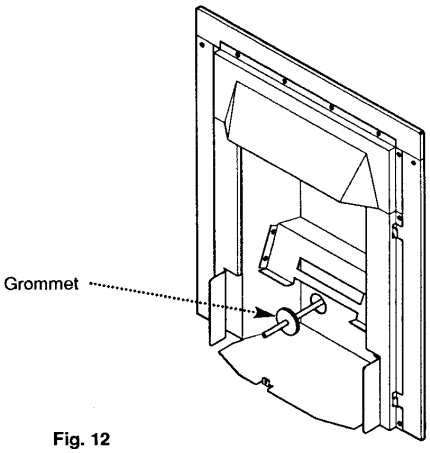

Fig. 12

Fit grommet over gas pipe and fit in hole in box once box is fitted back.

4.0 Installation – Page 11

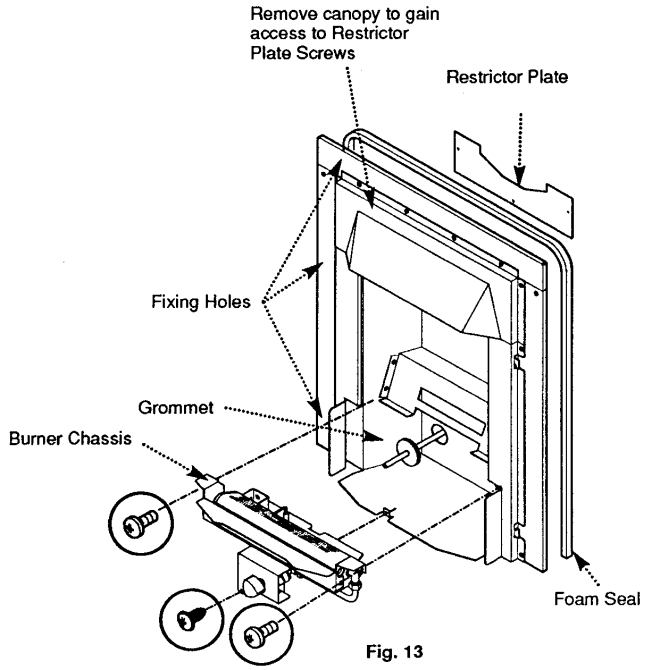

Fig. 13

4.1 Initial Preparation

1. Unpack the appliance from the carton and check all items are present. The ceramic coal bed items should be left in their box until required.

2. Some sheet metal parts may be fitted with protective plastic coating which must be removed prior to installation.

4.2 Fitting the Fire

1. **If the fire is to be fitted in a flue box or a 5 inch lined flue, remove the restrictor plate from the rear of the appliance** (Fig. 13). To remove the restrictor plate, first remove the canopy to gain access to the screws. Remove restrictor plate, and replace the canopy taking care not to damage any painted surfaces.

2. The fire may be secured to the fireplace using one of two options:

a) With the fire pushed onto the fireplace opening in the correct level position, mark the four holes in the wall through the fixing holes in the firefront. Remove the fire, drill and plug the wall (Fig. 13).

b) Use the cable tensioning kit to secure the fire, proceed as follows:

3. Mark the rear face of the fireplace opening as shown. Drill and plug the holes (Fig. 14)..

4. The gas supply is to be routed from the rear, mark as shown (Fig. 14) and install the pipework after considering section 3.10 “Gas Supply & Connections”.

5. Take the foam seal from the kit and remove it’s backing strip. Fit it to the rear of the fire frame ensuring the seal is applied in the correct position as to allow no spillage of products through the screw securing holes (Fig. 13).

6. Screw the four eyebolts into the wall plugs ensuring that the holes in the end of the eyebolts are in the horizontal plane (Fig. 15).

6. Undo the three screws retaining the burner chassis to the combustion box sides and base. Withdraw the burner chassis from the fire and place to one side (Fig. 13).

7. The gas supply is routed through the fire rear panel, remove and cut the grommet.

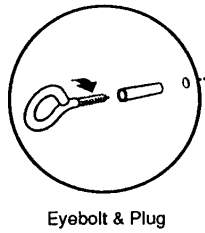

Fig. 15

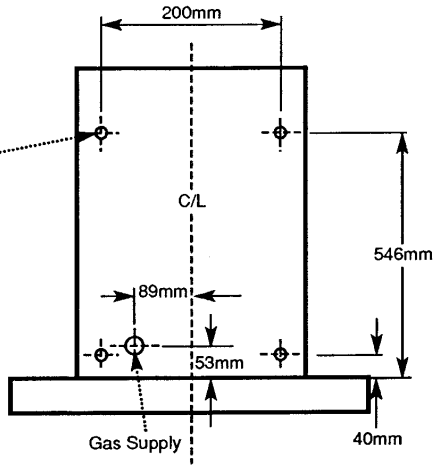

Fig. 14

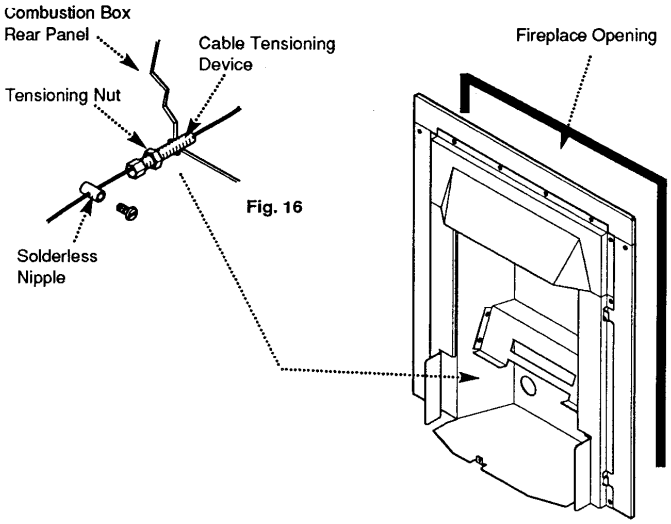

Fig. 16

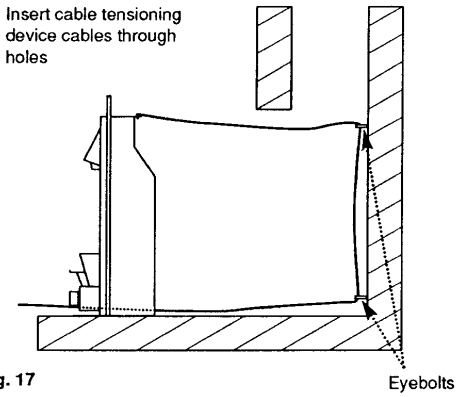

Fig. 17

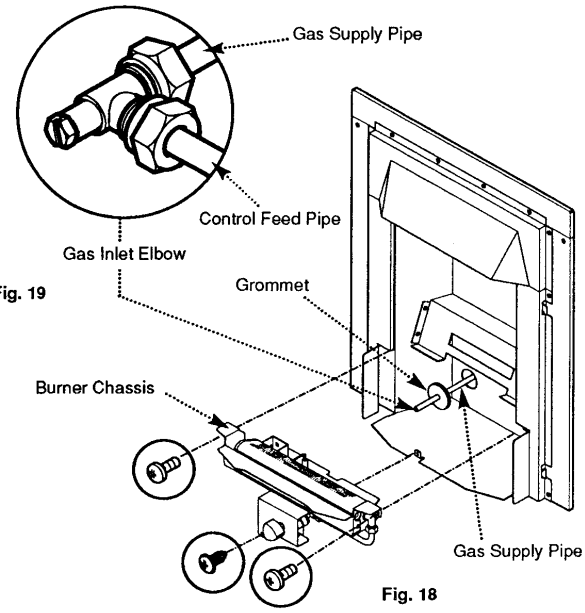

Fig. 19

Fig. 18

4.2 Fitting the Fire (cont)

8. Engage the tensioning nuts on the threaded shanks of the tensioning devices. Run the nuts down to the hexagonal heads of the tensioning devices (Fig. 16).

9. From the front insert the cable tensioning devices through the combustion box rear panel. The hexagonal heads must be to the inside of the box (Fig. 16).

10. Position the appliance in front of the fireplace opening and insert the cables in the holes In the combustion box rear flange (Fig.17). Pass the cables through the eyebolts in the builders opening rear face and insert them in the tensioning devices (Fig. 16 & 17). Manoeuvre the appliance backwards into the opening, drawing any slack length of cable through the tensioners.

11. Push the appliance as far back in the opening as possible and pull the cables through the tensioners as tight as possible.

12. Run the solderless nipples down the cables to the tensioners and tighten their securing screws (Fig. 16). As required, take the relevant grommet(s) and slide over the gas supplies. Run the grommet(s) down the pipe and insert in the hole in the rear panel (Fig. 18).

13. Using a suitable spanner tighten the tensioning nuts clockwise so that the fire frame surround is pulled up against the wall or surround and the seal is compressed. **DO NOT CUT OFF THE EXCESS CABLE** - coil neatly and secure with tape.

14. Fit the inlet elbow supplied in the kit to the controls feed pipe. Refit the burner chassis and connect the gas supply to the inlet elbow (Fig. 18 & 19).

15. The side and back brick effect insulation panels can be reversed to offer a plain effect for the customer. To reverse this brick effect remove the black sheet metal retaining pieces left and right hand, carefully remove the three insulation panels and reassemble with the plain effect on display. Refit the retaining panels taking care not to damage the paint and insulation panels.

5.0 Commissioning the Fire – Page 13

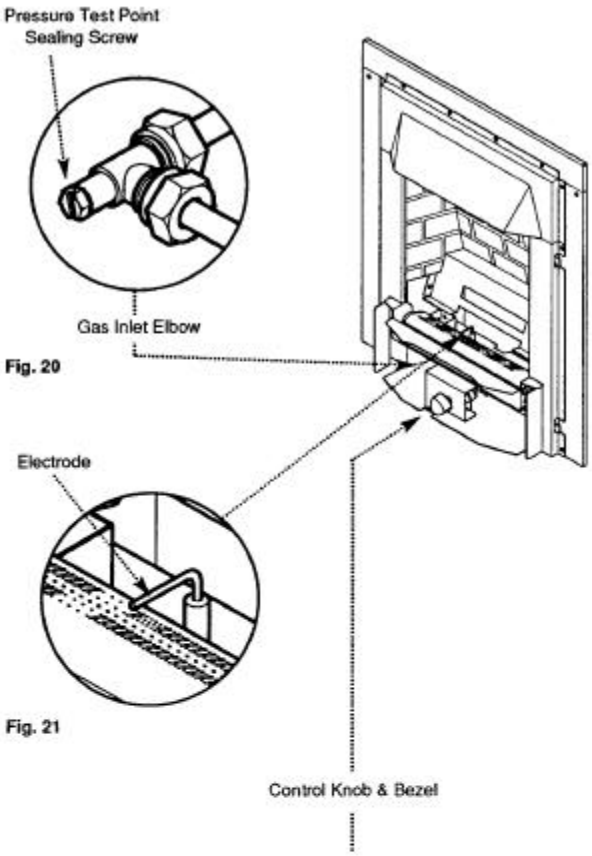

Fig. 20

Fig. 21

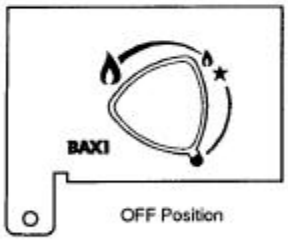

Fig. 22

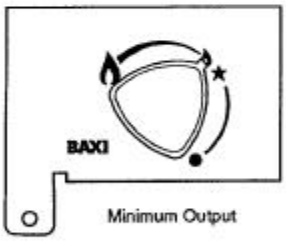

Fig. 24

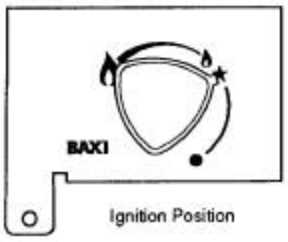

Fig. 23

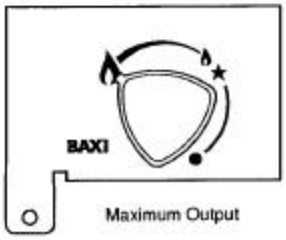

Fig. 25

5.1 Checking Gas Soundness

1. Turn on the gas supply and check for gas soundness with leak detection fluid (to BS 6891).

5.2 Checking Operation of the Fire

1. Remove the screw from the pressure test point on the gas inlet elbow and connect a suitable pressure gauge (Fig. 20).

2. Check that the electrode is sparking to the burner (Fig. 21) when the control knob is pushed in and rotated anticlockwise passed the ignition position (★) (Fig. 23).

3. Re-set the appliance to the OFF position (●) and turn on the gas to the appliance.

5.3 Lighting the Fire

1. Purge the air from the appliance by depressing the control knob and rotating slowly anticlockwise through the ignition position (★). When the electrode sparks the burner will light.

2. Once the burner has lit continue to push in the control knob for 15 seconds allowing the magnetic safety valve to operate.

3. If the burner fails to light repeat step 1 and 2 above.

4. With the burner alight, depress the control knob slightly and rotate anticlockwise to the maximum output position (🔥) (Fig. 25).

5. Release the knob and check the gas inlet pressure is 20 mbar ± 1.0 mbar.

6. Turn the control knob back to the OFF (●) position (Fig. 22). Disconnect the pressure gauge and re-fit the screw to the pressure test point ensuring a gas tight seal.

spares & parts online IBASIS.CO.UK

6.0 Arranging the Coals – Page 14

Rear Coal Moulding

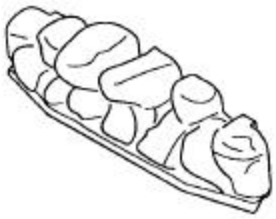

Front Coal Moulding

Front and Rear Arrangement

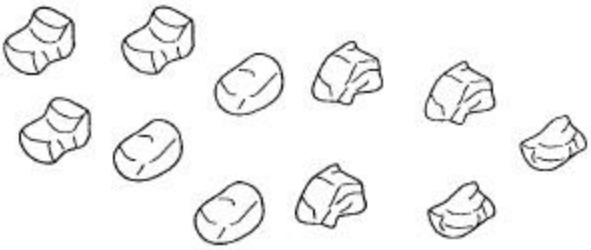

Loose Coals

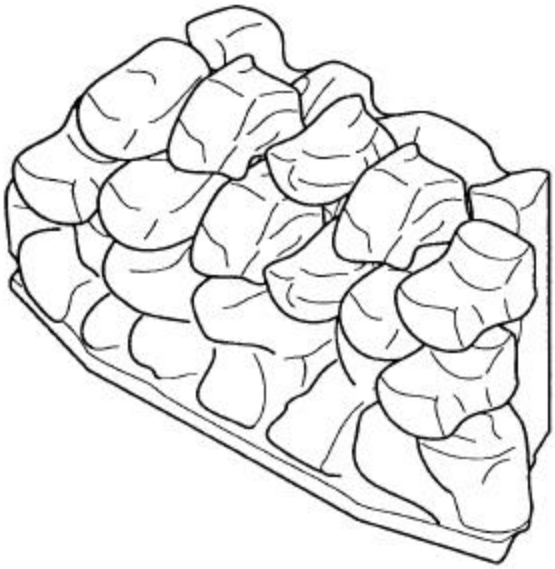

Layout of Coalbed

6.1 Identification

It is important that all the firebed components are used and arranged as shown in order to achieve the desired flame picture. Ensure all firebed components are present and identified prior to installation.

1. Remove the coals, front and rear coal mouldings from their protective packaging and place them on a newspaper or similar to prevent soiling furnishings.

CAUTION: The coals are extremely fragile and must be handled accordingly. To avoid soiling ones hands, gloves should be worn and any inhalation of the dust should be avoided. Keep the coals away from children at all times. Never use coals other than those supplied or Genuine Baxi Spare Parts. Never put additional coals on the fire. Please read Section 1.2 Important Information

2. The side and back brick effect insulation panels can be reversed to offer a plain effect for the customer. To reverse this brick effect remove the black sheet metal retaining pieces left and right hand, carefully remove the three insulation panels and reassemble with the plain effect on display. Refit the retaining panels taking care not to damage the paint and insulation panels.

6.0 Arranging the Coals – Page 15

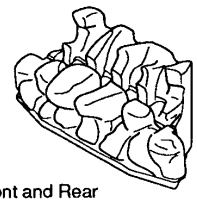

Front and Rear
Coalbed Arrangement

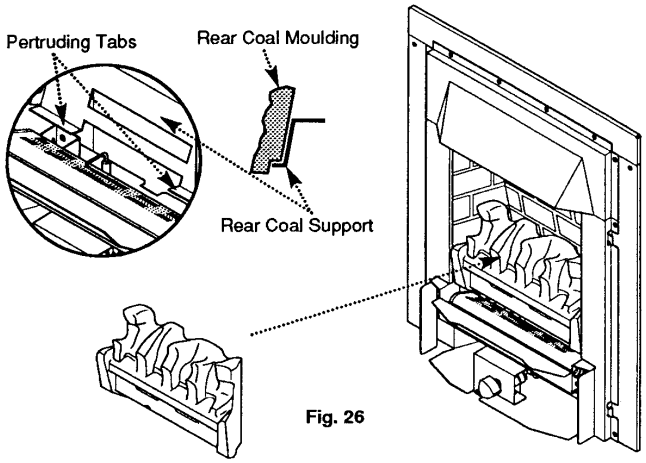

Fig. 26

6.2 Arranging the Coalbed

NOTE: It is important for the safe operation of the appliance that the front and rear coal mouldings are correctly located and in accordance with these instructions.

1. Carefully position the rear coal moulding into the rear of the fire. The undercut in the base of the moulding should rest on the pertrudng tabs of the rear coal support. The back face of the moulding should come to rest on the front face of the rear coal support and shall be centrally positioned (Fig. 26). Care should be taken that the rear coal moulding does not fall forward at this stage.

2. Carefully position the front coal moulding on the front part of the burner tray with the front edge of the moulding behind the lip. The rear edge of the moulding should then rest on the front of the burner. The front and rear coal mouldings should be touching each other at both sides of the firebed (Fig. 27).

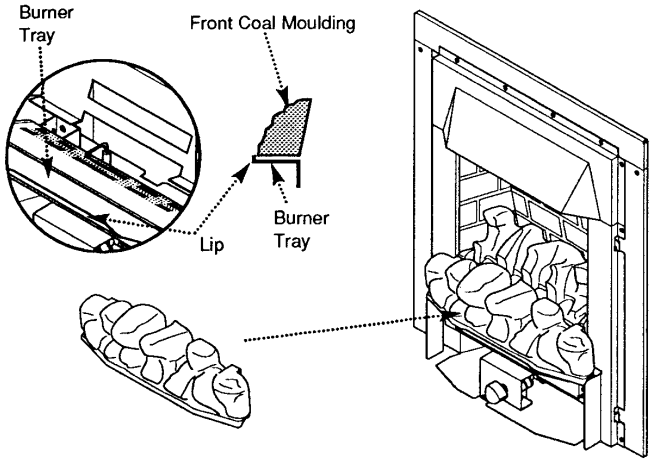

Fig. 27

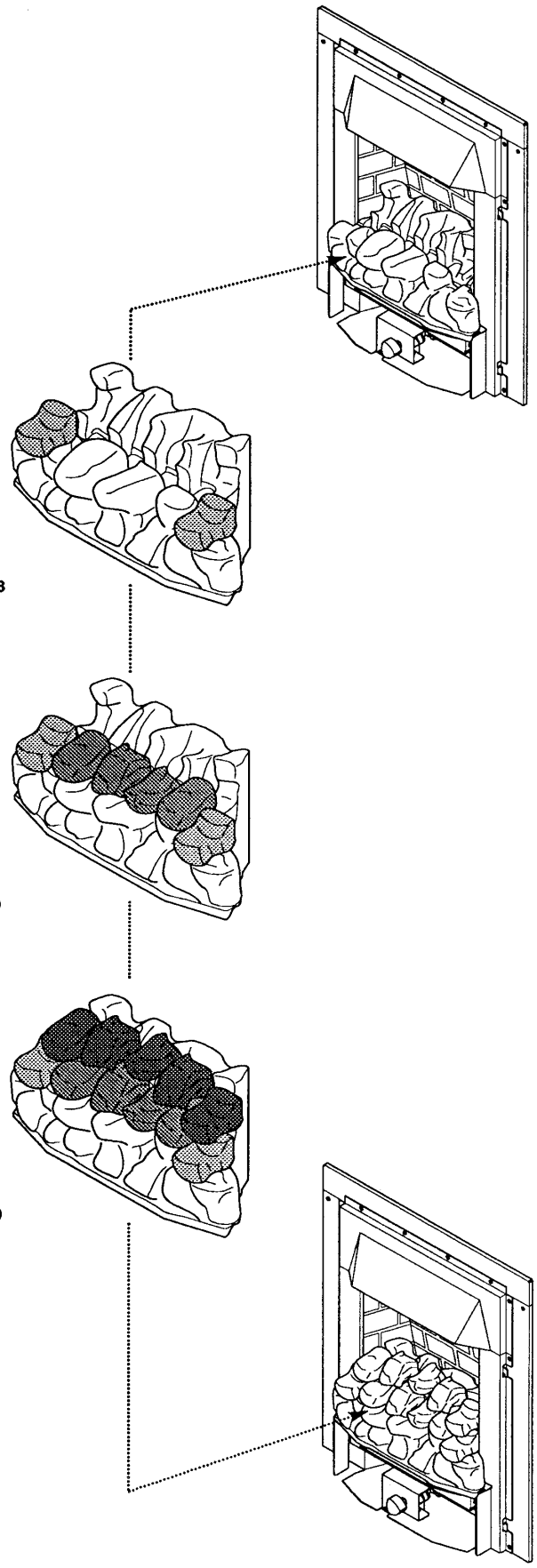

Fig. 28

Fig. 29

Fig. 30

6.3 Arranging the Loose Coals

NOTE: Due care and attention to these instructions should be taken when positioning the loose coals. Do not allow the coals to drop in the gap between the front and rear coal mouldings.

1. Take 2 coals and place on the outer edges of the front coal moulding (Fig. 28).

2. Take 4 coals and place as shown in Fig. 29 bridging the front coal moulding and the rear coal moulding, ensure and flat faces on these coals face downward. Care should be taken as not to allow any coals to drop down between the front and rear coal mouldings (Fig. 29).

3. Take the 5 remaining coals and place as shown in Fig. 30 positioned in the gaps created by the front, rear coal mouldings and loose coals (Fig. 30).

7.0 Checking for Spillage – Page 17

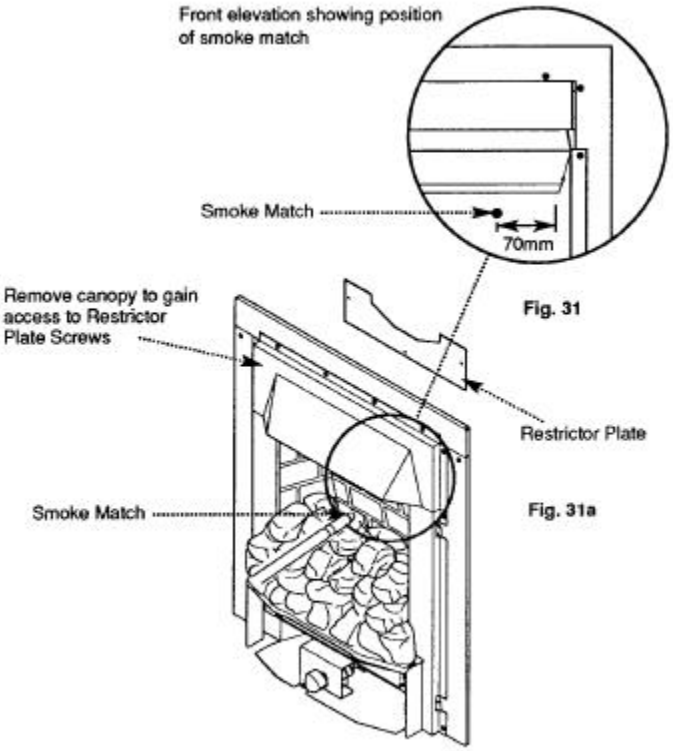

Fig. 31

Fig. 31a

Insert the smoke match 20mm in from the front edge of the canopy and 70mm in from the right hand side.

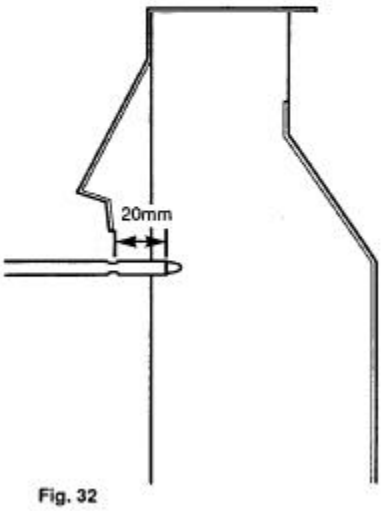

Fig. 32

7.1 Checking for Spillage

CAUTION-Whilst checking for spillage care must be taken to avoid touching hot panels.

1. Before starting test close all doors and windows.

2. Operate the fire from cold at maximum Input.

3. After approximately five minutes check for spillage.

4. Fit a smoke match into a holder, and position with the holder held horizontally projecting 20mm under the lip of the canopy bottom and 70mm from the start of the straight section on one side of the fire (Fig. 31 & 32).

5. If spillage is evident leave the fire operating for a further ten minutes and repeat test.

6. If spillage continues to occur and the flue restrictor is still fitted, remove restrictor (Fig 31a). Remove the fire canopy to gain access to restrictor plate screws. Remove the restrictor and replace the canopy taking care not to damage any painted surfaces.

7. If test is successful repeat with any extractor fan operating and connecting doors open to create the worst likely operating conditions.

8. If spillage still occurs and the problem cannot be rectified the fire must be isolated until the problem is resolved.

7.2 Possible Causes of Spillage

1. The smoke match may have been positioned incorrectly, resulting in the smoke being picked up by hot convected air currents.

2. The builders opening or flue installation may be unsound.

3. Down draughts may be present.

4. Flue blockages.

5. Fire not sealed against fireplace or surround.

6. Surround not sealed to wall correctly.

8.0 Fitting the Trim & Fender – Page 18

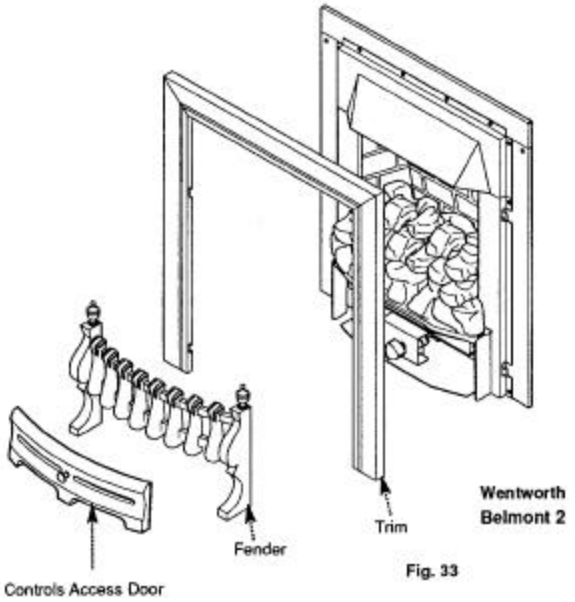

Fig. 33

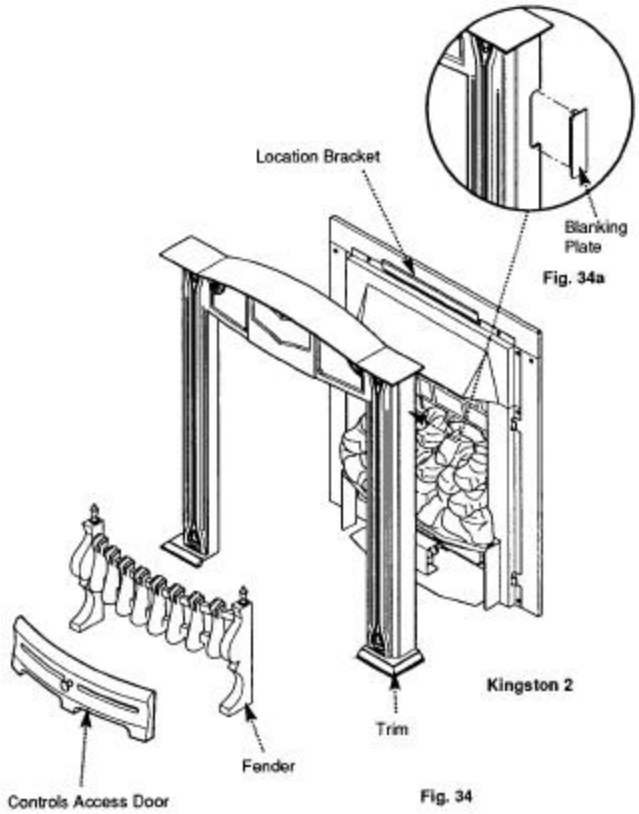

Fig. 34a

Fig. 34

8.1 Fitting the Trim and Fender

1. Carefully remove the trim and fender from their packaging. Place trim on its back to prevent falling over.

8.2 Wentworth, Belmont 2 Models (Fig. 33)

1. Align the trim with the fire outer frame. The trim has four keyholes type cutouts on the inside edge which locate on the keyways of the black side trims.

2. Place the fender assembly centrally between the legs of the trim and push it back as far as possible.

3. In a similar manner place the controls access door centrally in the fender opening and push back as far as possible.

8.3 Kingston 2 Models (Fig. 34)

1. Prior to fitting the trim it is necessary to fit the blanking plate (found in the kit) in the cut-out at the top right hand side. Press the plate into the cut-out until the locating tabs snap into position (Fig. 34a).

2. Take the outercase location bracket from the kit and fasten it using the existing 2 screws to the canopy (Fig. 34). This will now mate with the bracket on the back of the trim.

3. Align the brackets on the rear of the trim assembly with those on the fire outer frame, and lower the trim into position.

4. Place the fender assembly centrally between the legs of the trim and push it back as far as possible.

5. Place the controls access door centrally in the fender opening and push back as far as possible.

8.4 Informing the User

1. These instructions and the users instructions should be handed to the customer. At the same time the customer should be shown how to operate the fire safely and efficiently.

2. The need for annual servicing should be emphasised and the returning of the guarantee card advised.

9.0 Annual Servicing – Page 19

9.1 Maintenance

IMPORTANT: It is possible that some soot may be deposited on the coals after use. This is acceptable providing it is not allowed to accumulate.

CAUTION: The coals are extremely fragile and must be handled accordingly. To avoid soiling ones hands, gloves should be worn and any inhalation of the dust should be avoided. Keep the coals away from children at all times. Never use coals other than those supplied or Genuine Baxi Spare Parts. Never put additional coals on the fire. Please read Section 1.2 Important Information

1. Servicing should be carried out regularly by a competent person in accordance with the relevant regulations, to ensure the safe and correct operation of the appliance.

2. Before commencing any service or replacement of parts, turn off the gas supply to the fire and ensure that the fire is cold.

3. After servicing, check for gas soundness.

4. When ordering spare parts please quote appliance name and serial number. These can be found on the data badge which is located by removing the controls access door, the badge is on the base plate of the appliance.

5. At least once a year check for debris in the catchment area behind the fire and in the flueway.

6. If excessive soot has accumulated check to establish the cause. Rectify and clean flue or chimney accordingly.

7. The loose coals may be removed for cleaning. The coals are delicate and should be handled carefully. Gently brush with a soft brush to remove dust or deposits.

8. Examine the coals for signs of cracking and replace if necessary.

IMPORTANT: See coal layout procedure (Section 6.0 Arranging the Coals) before attempting to replace coals which should only be replaced as a complete set with no extra coals added.

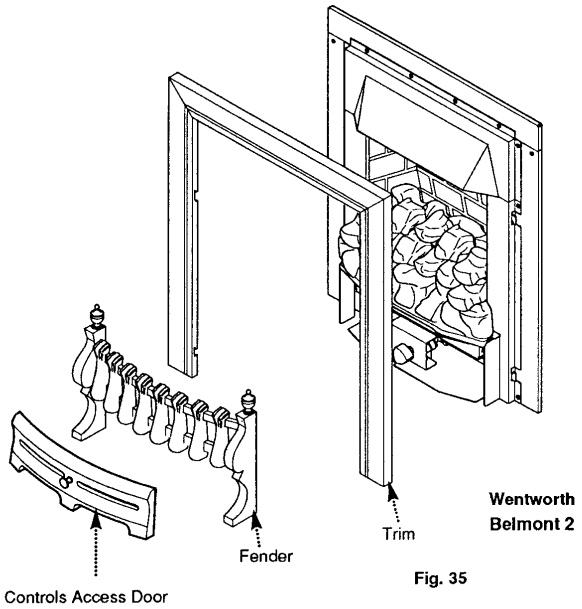

Fig. 35

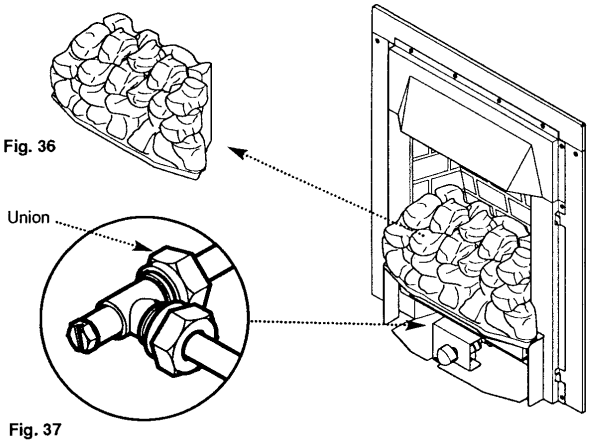

Fig. 36

Fig. 37

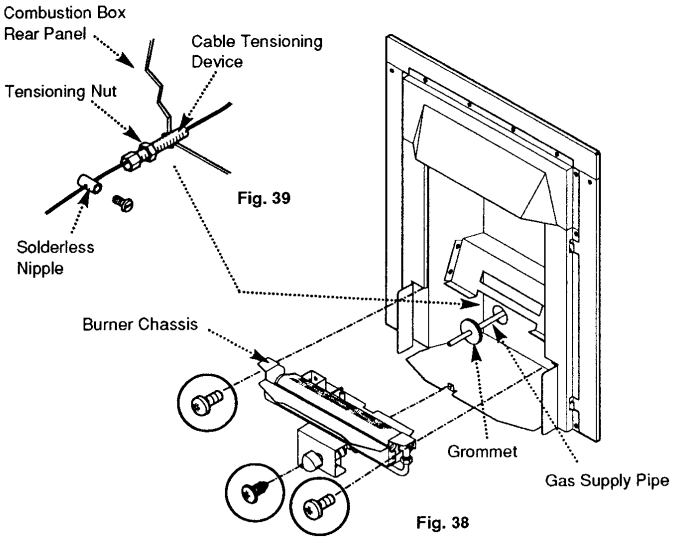

Fig. 39

Fig. 38

9.2 Preparation

1. For reasons of safety and economy it is important to service the fire annually.

WARNING: Isolate the gas supply to the appliance before servicing.

2. Remove the controls access door and fender assembly (Fig. 35).

3. Remove the trim by lifting outwards and upwards over slots (Fig. 35).

4. Carefully remove all the loose coals, and the front and rear coal mouldings (Fig. 36).

5. Undo the disconnecting union on the gas supply (Fig. 37).

6. Undo the three screws retaining the burner chassis to the combustion box sides and combustion box base. Withdraw the burner chassis from the fire (Fig.38).

7. Slacken the cable tensioning nut and remove the solderless nipples from the cables (Fig. 39).

8. Where applicable, remove the grommet from the gas supply if it is routed through the fire rear panel (Fig. 38).

9. Pull the fire forwards out of the opening, disengage the cables from the eyebolts and lift the fire away from the hearth. If the fire is secured to the fireplace using screws, remove in order to release the fire from the fireplace.

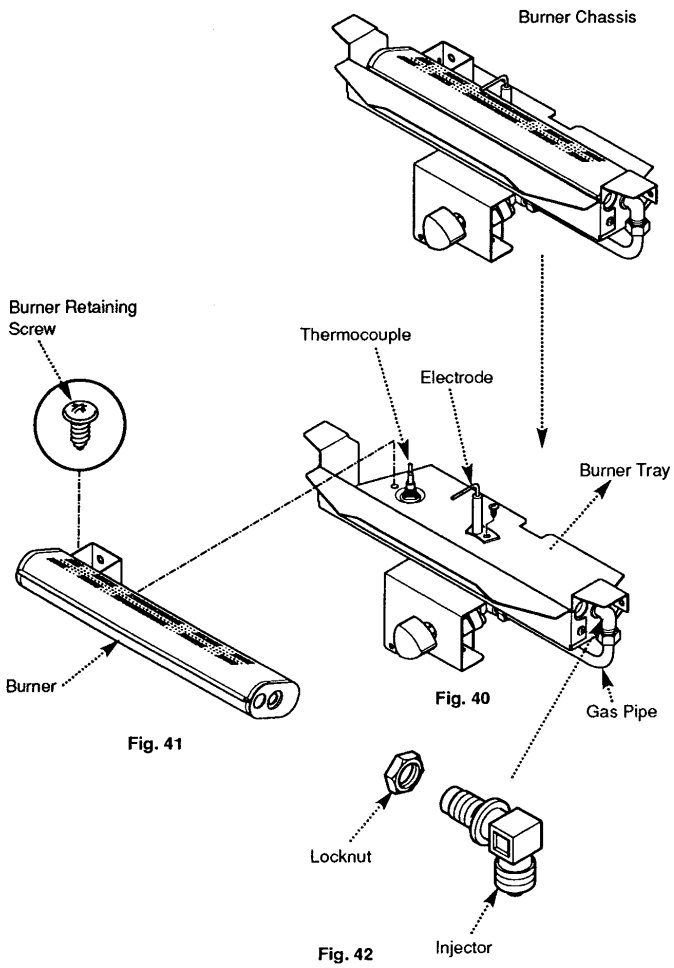

Fig. 41

Fig. 40

Fig. 42

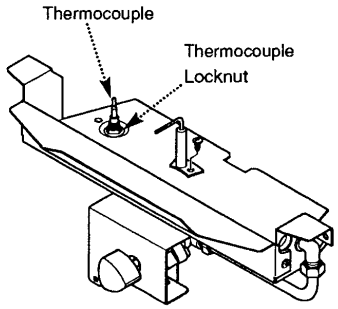

Fig. 43

9.3 Cleaning the Burner and Injectors

1. Undo the screw retaining the spark electrode to the burner tray (Fig. 40).

2. Undo the screw retaining the burner to the burner tray (Fig. 41).

3. Slide the burner to the left to disengage from the injector. Rotate the electrode slightly and lift the burner out of the tray.

4. Using a soft brush remove any dirt from the burner and ensure all ports are free from obstruction.

5. Undo the union nut connecting the gas pipe to the injector (Fig. 40).

6. Undo the injector locknut and remove the injector from the burner tray by disengaging the gas pipe from the injector (Fig. 42).

7. Examine and clean the injector. Do not use any hard tools such as pins or wire. Renew if necessary (Fig. 42).

8. When re-tightening the gas feed pipe nut, hold the injector body with a suitable spanner to prevent misalignment of the injector.

9. Reassemble in reverse order.

9.4 Cleaning the Thermocouple (Fig. 43)

NOTE: No attempt should be made to clean the device using any hard tools, including pins or wire.

WARNING: The thermocouple assembly must not be adjusted in any way.

1. The thermocouple must not be altered so that it will not operate or be bypassed in any way.

2. Ensure that the burner aeration hole is free from lint, debris etc.

3. Ensure that the thermocouple locknut is tight and there is no damage to the thermocouple lead.

4. The thermocouple can be changed as an individual component. (See section 10.0 Changing Components).

5. Only use a Genuine Baxi Spare Part.

spares & parts online IBASIS.CO.UK

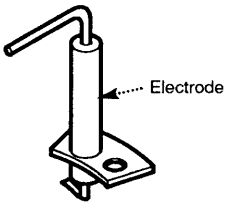

Fig. 44

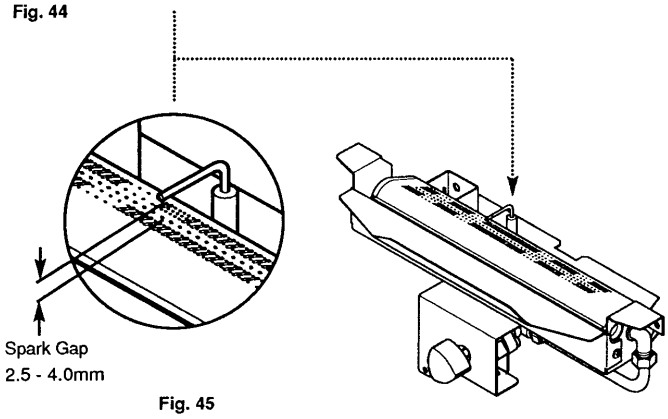

Fig. 45

9.5 Cleaning the Electrode (Fig. 44 & 45)

1. Check for any signs of cracking or other damage to the ceramic.

2. Clean the electrode wire if necessary.

3. Upon re-assembly check the spark gap is 2.5-4.0mm.

9.6 Completing Servicing

1. Clean any dirt and debris from the combustion box and fireplace recess.

2. Reassemble the fire in reverse order of dismantling and refit into the opening.

3. Recommission the fire.

10 0 Changing Components – Page 23

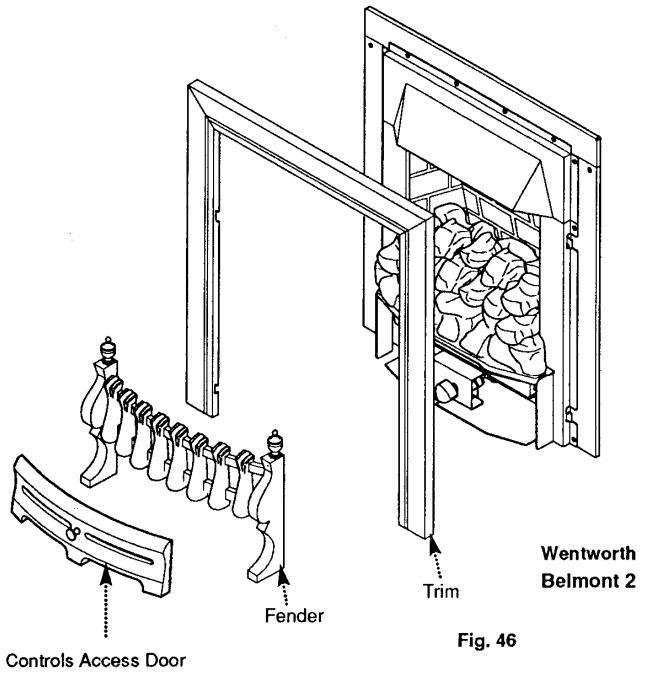

Fig. 46

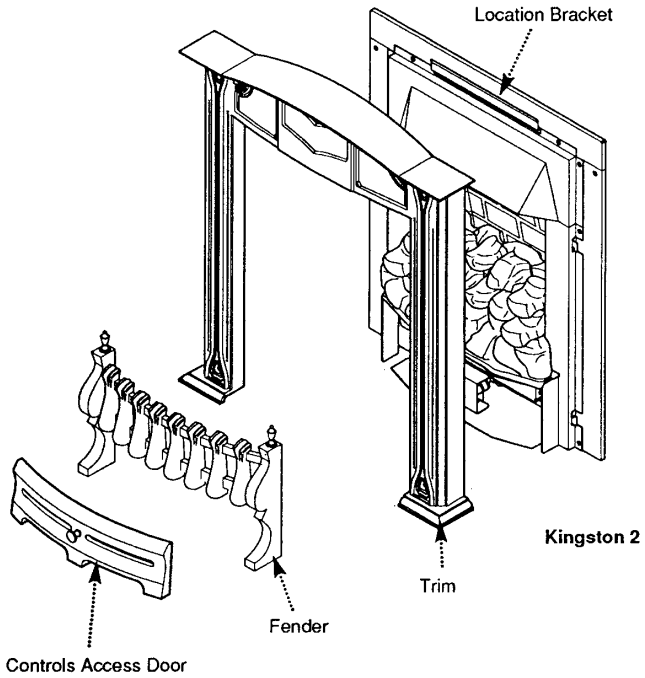

Fig. 47

10.1 Changing Components

WARNING: Isolate the gas supply to the appliance before changing any components.

1. Remove the controls access door and fender assembly (Fig 46 or 47).

2. Carefully remove all the loose coals and the front and rear coal mouldings.

CAUTION: The coals are extremely fragile and must be handled accordingly. To avoid soiling ones hands, gloves should be worn and any inhalation of the dust should be avoided. Keep the coals away from children at all times. Never use coals other than those supplied or Genuine Baxi Spare Parts. Never put additional coals on the fire. Please read section 1.2 Important Information

NOTE: After changing any components carry out checks for gas soundness

10.2 Wentworth, Belmont 2 Models (Fig. 46)

1. Pull and lift the trim away from the fire outer frame. It is attached by the keyways in the inside edge of the trim.

10.3 Kingston 2 Models (Fig. 47)

1. Lift the trim away from the fire outer frame, disengaging the location bracket at the top of the appliance. Place trim on its back to prevent falling over.

spares & parts online IBASIS.CO.UK

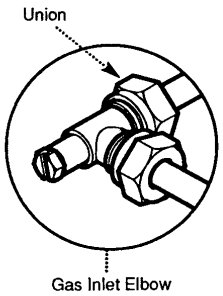

Fig. 48

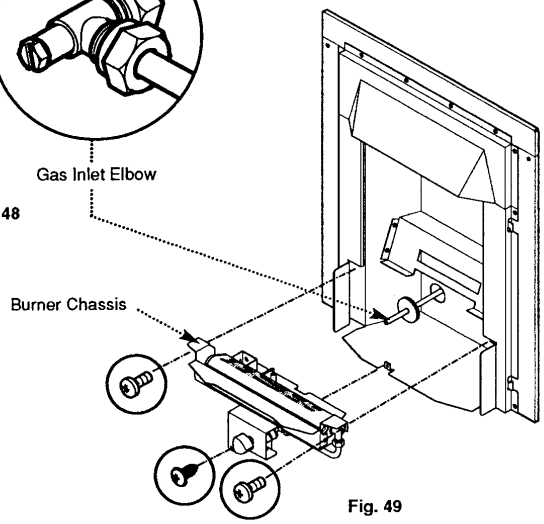

Fig. 49

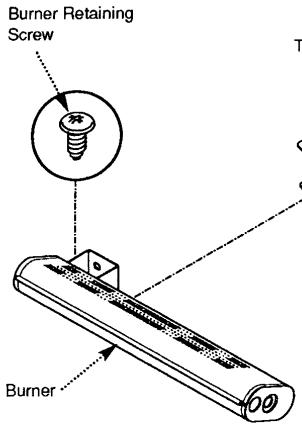

Fig.51

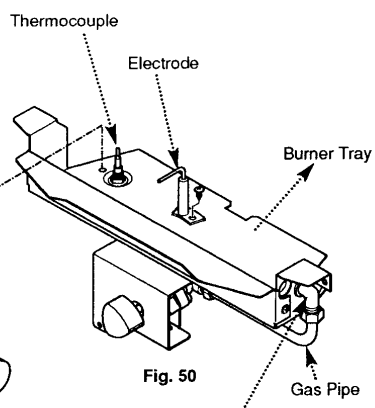

Fig. 50

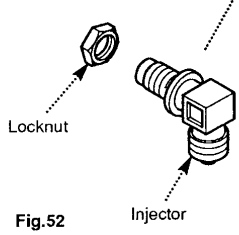

Fig.52

10.4 Removal of Controls/Burner Chassis Assembly

1. If any of the controls components are to be renewed the burner chassis assembly must be removed from the appliance.

2. Undo the gas supply at the disconnecting union. If necessary remove any pipework between the union and inlet elbow (Fig. 48).

3. Undo the three screws retaining the burner chassis assembly to the combustion box sides and combustion box base. Withdraw the burner chassis assembly (Fig. 49).

10.5 Burner

1. Undo the screw retaining the spark electrode to the burner tray (Fig. 50).

2. Undo the screw retaining the burner to the burner tray (Fig. 51).

3. Slide the burner to the left to disengage from the injector. Rotate the electrode and lift clear the burner from the tray.

4. Replace with new burner and re-assembly in reverse order.

10.6 Injector (Fig. 52)

1. Remove the burner as described above and undo the union nut connecting the gas feed pipe to the injector (Fig. 50).

2. Remove the locknut retaining the injector to the controls frame and withdraw the injector by disengaging the gas pipe from the injector.

3. Fit the new injector. When re-tightening the gas feed pipe nut, hold the injector body with a suitable spanner to prevent misalignment of the injector.

4. Reassemble in reverse order.

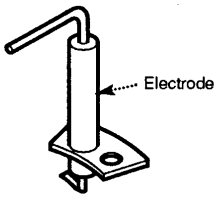

Fig. 53

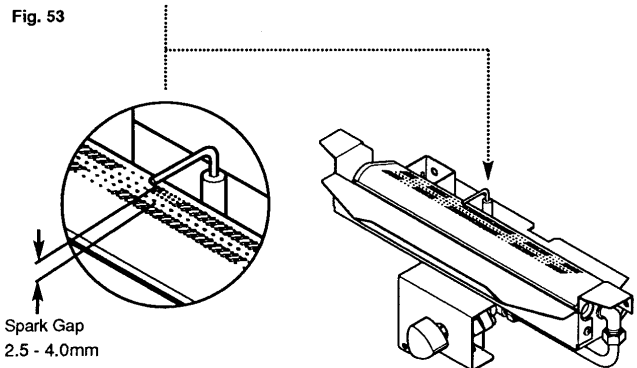

Fig. 54

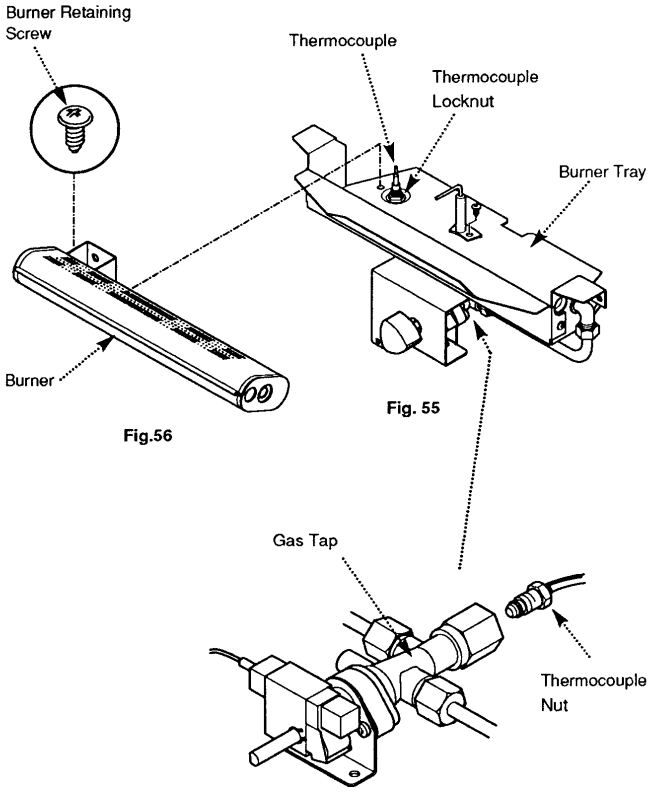

Fig.56

Fig. 55

Fig. 57

10.7 Electrode (Fig. 53 & 54)

1. Disconnect the electrode lead from the tag at the base of the electrode.

2. Undo the screw retaining the electrode to the burner tray and withdraw.

3. Fit the new electrode and re-assemble In reverse order. Check that the spark gap is between 2.5mm and 4.0mm.

10.8 Thermocouple

1. Remove the burner as described in section 10.5.

2. Undo and remove the locknut holding the thermocouple to the burner tray (Fig. 55).

3. Undo the thermocouple nut from the rear of the gas valve (Fig. 57) and remove the thermocouple from the burner tray.

4. Shape the new thermocouple to the existing thermocouple and fit new thermocouple, reassemble in reverse order of dismantling.

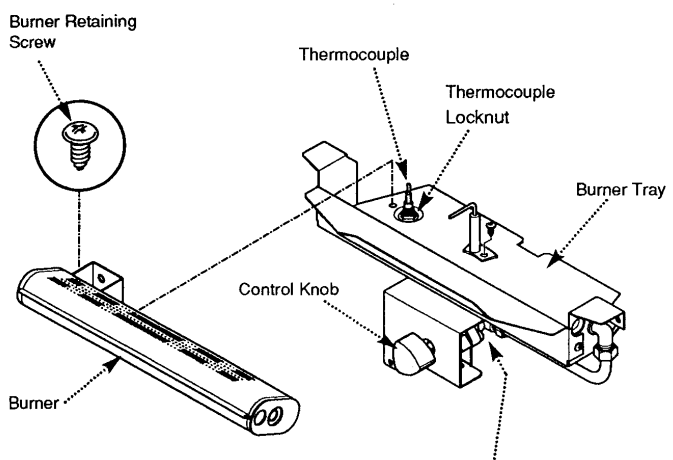

Fig. 58

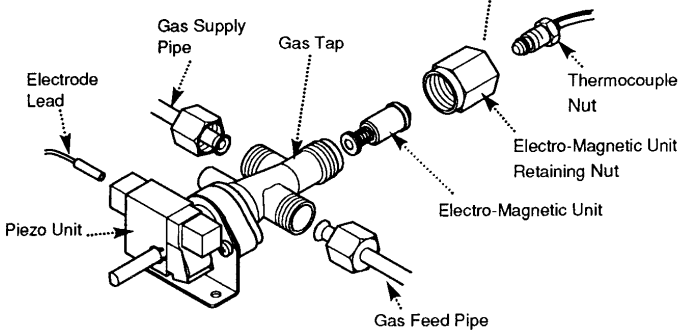

Fig.59

10.9 Gas Tap and Piezo Unit (Fig. 59)

1. Remove the burner as described in section 10.5.

2. Undo the thermocouple nut from the rear of the gas valve.

3. Undo the union nuts connecting the gas inlet pipe and the gas feed pipe to the injector from the body of the gas valve.

4. Disconnect the electrode lead from the piezo unit.

5. Pull away the control knob from the gas valve shaft.

6. Undo the two screws retaining the gas valve and piezo unit to the control marking plate and remove the unit.

7. Fit the new unit and re-assemble in reverse order.

10.10 Electro-Magnetic Unit (Fig. 59)

1. Undo the thermocouple nut from base of the tap.

2. Undo the magnetic unit retaining nut and withdraw the magnetic unit.

3. Fit new magnetic unit and reassemble in reverse order.

11.0 Short Parts List – Page 27

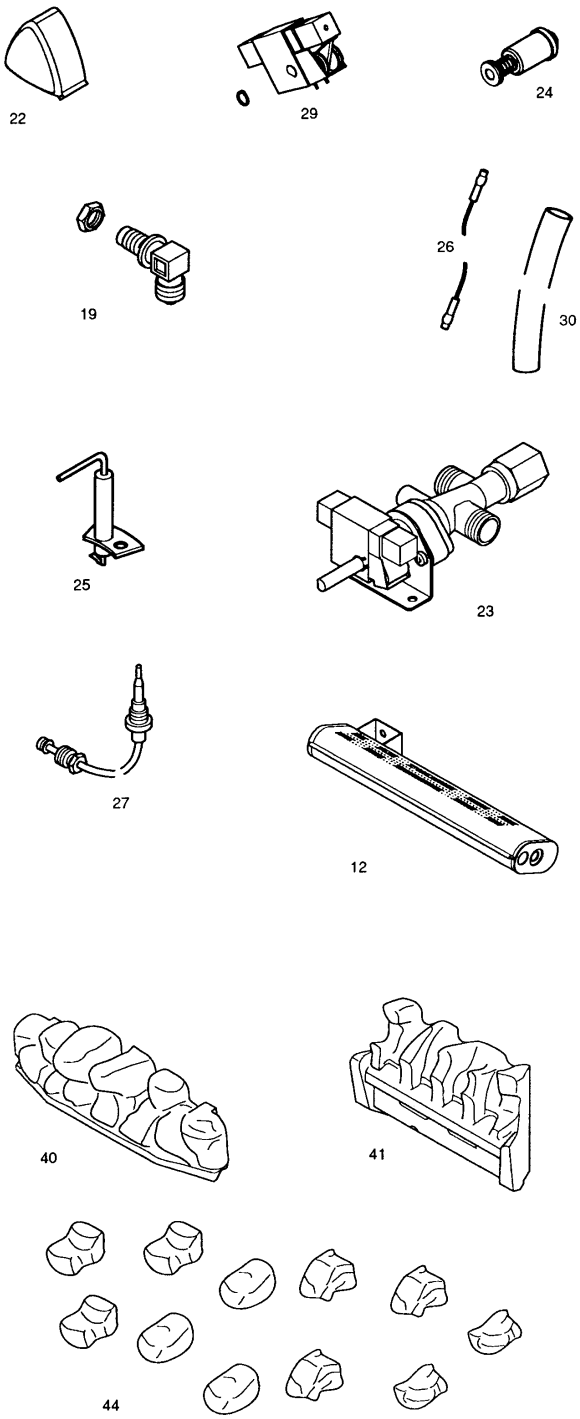

11.1 Short Parts List

Key No.	G.C. No.	Description	Manufacturers Part No.
40	E25 213	Front Coal Moulding	245256
41	E25 214	Rear Coal Moulding	245257
44	E25 217	Loose Coals	245260
22	E25 198	Control Knob	245239
23	E25 199	Gas Tap	245240
24	E01 617	Mag Unit	239413
29	E01 353	Piezo Unit	239289
26	378 924	Electrode Lead	236493
30	E25 203	HT Sleeve	236494
19	E25 196	Injector	245237
12	E24 110	Burner	245229
28	E25 202	Thermocouple	245245
27	E25 200	Electrode	245242

Click here for Helplines