User manual and Installation instructions

Parva

Models:

M90.24S
M90.28S
M90.24SR
M90.28SR

BIASI

spares & parts online IBASIS.CO.UK

Congratulations on your choice.

Your boiler is electronically controlled and has electronic ignition.

The materials it is made of and the control systems it is equipped with give you safety, a high level of comfort and energy savings to allow you to get the greatest benefit out of independent heating.

Remember that...

The manual must be read thoroughly, so that you will be able to use the boiler in a safe and sensible way;
must be carefully kept. It may be necessary for reference in the future.

First lighting up must be carried out by competent and responsible engineer.

The manufacturer disclaim all liability for any translations of the present manual from which incorrect interpretation may occur;
cannot be held responsible for non – observance of instructions contained in this manual or for the consequences of any procedure not specifically described.

Using the boiler...

Before lighting the boiler, you are advised to have a professionally qualified person check that the installation of the gas supply:
– is gas – tight;
– is of the correct gauge for the flow to the boiler;
– is fitted with all the safety and control devices required by the current Regulations;

Ensure that the installer has connected the pressure relief valve outlet to a drain pipe. The manufacturers are not responsible for damage caused by opening of the pressure relief valve and consequent escape of water, if not connected correctly to the drain.

On detecting the smell of gas
– don't operate any electrical switches, the telephone or any device that may produce sparks;
– open the windows and doors at once to create a draught of air which will purge the area;
– shut off the gas cocks;
– get the assistance of a qualified person.

Do not touch the appliance with parts of the body that are wet or damp and/or bare feet.

In case of structural work or maintenance near the exhaust duct and/or fume exhaust devices or their attachments, turn off the appliance. On completion of the work, have a professionally qualified person check their efficiency.

Repairs (under guarantee) must be carried out only by an approved engineer, using genuine spare parts. Thus do no more than switching off the boiler yourself (see the instructions).

Your boiler allows heating up of water to a temperature less than boiling point;
– must be connected to a central heating system and/or a hot water supply system, compatible with its performance and output;
– can be used only for those purposes for which it has been specially designed;
– must not be touched by children or by those unfamiliar with its operation;
– must not be exposed to weather conditions.

Safe handling of substances

Biasi products are manufactured in accordance with ISO 9000 and do not, and will not, contain any hazardous materials or substances such as asbestos, mercury or C.F.C.'s.
The appliance packaging does not contain any substances, which may be considered a hazard to health.

Combustion chamber panels

Material: mineral fibers

Known hazards – Some people can suffer reddening and itching of the skin. Fibre entry into the eye will cause foreign body irritation, which can cause severe irritation to people wearing contact lenses. Irritation to respiratory tract.

Precautions – Dust goggles will protect eyes. People with a history of skin complaints may be particularly susceptible to irritation. High dust levels are only likely to arise following harsh abrasion. In general, normal handling and use will not present high risk, follow good hygiene practices, wash hands before, touching eyes, consuming food, drinking or using the toilet.

First aid – Medical attention must be sought following eye contact or prolonged reddening of the skin.

Thermostat / Temperature gauge

Description – Sealed phial and capillary containing liquid.

Known hazards – irritating to skin, eyes and throat. Vapour is harmful. Inflammable – do not extinguish with water.

Precautions – Do not incinerate. Avoid contact with broken/leaking phials. Do not purposely puncture.

First aid medical attention must be sought following eyes/skin contact, wash with clean water.

Appliance category II2H3+ Gas G20 20 mbar, G30 29 mbar, G31 37 mbar
Country of destination: United Kingdom

This appliance conforms with the EEC directive 90/396 and, consequently, it has the right to make use of the CE brand name

Moreover, the appliance conforms with the EEC directive 87/308 relative to the prevention and elimination of radio disturbances.

The appliance is built to comply with the regulation now in force regarding gas appliance's safety and the European regulation now in force relative to safety of household and similar electrical appliances.

The manufacturer, in the continuous pocess to improve his products, reserves the right to modify the data expressed in the present documentation at any time and without prior notice.

The present documentation is an informative support and it cannot be considered as a contract towards third parties.

spares & parts online IBASIS.CO.UK

Boiler installation and commissioning tips

The installation must be carried out by a qualified person who will be responsible for observing the current Regulations.

Installing the boiler...

Do not forget to remove the transit caps and plugs from the boiler connections these are fitted to every boiler.

Keep the boiler clear of dust during installation and in particular do not allow any dust or debris to enter the top of the boiler where the flue connection is made. It is recommended that you put a dust sheet over the top of the boiler until you are ready to make the flue connection.

Because every boiler is fired and tested live at the factory, a small amount of water remains within the boiler. It is possible for this water to initially cause the pump to seize. It is therefore recommended that the pump rotor be manually turned to free its rotation before turning the boiler on.

Remember to release the auto air purge before filling the boiler. See the instructions to identify the location of this device.

Do not remove the cap of the pressure test points of the air switch (top left side of the boiler).

You are strongly advised to flush out the system both cold and hot in order to remove system and installation debris.

It is also sensible to initially fire and commission the boiler before connecting any external controls such as a room thermostat. By this method if you have a subsequent problem following the addition of an external control you can eliminate the boiler from your fault analysis.

Do not forget to range rate the boiler to suit the system requirements. This procedure is covered in the commissioning section of the installation manual.

If the boiler is fitted with a digital programmer, when setting the times for automatic operation, remember that for every "ON" time there must be an "OFF" time to follow and that on every occasion you enter a time you must also indicate which days that you want the boiler to follow the timed settings.

Some products incorporate an anti cycling time delay. It is normal when first switching the boiler on for the boiler to operate on heating for a few seconds then switch off. After 3 – 4 minutes has elapsed the boiler will then re ignite and operate perfectly normally. The ignition delay cycle does not prevent normal operation of the boiler to provide d.h.w.

If you are in any doubts as to the installation or operation of the boiler please read the instruction manuals thoroughly and then if necessary contact Biasi UK for advice and assistance.

Please remember that if you are in any doubt about the installation of this product you can contact our Technical Helpline on tel. 01902 304400

spares & parts online IBASIS.CO.UK

TABLE OF CONTENTS

USE

1 Appliance description 1
1.1 Overview 1
1.2 Control panel 1
1.3 Isolation valves 1
1.4 Technical data 1

2 Instructions for use 2
2.1 Warnings 2
2.2 Refilling procedure 2
2.3 Ignition 2
2.4 C.h. circuit temperature 3
2.5 D.h.w. temperature (combi) 3
2.6 Extinguishing 4
2.7 Built in time switch (combi) 5

3 Useful advice 8
3.1 Central heating 8
3.2 Frost protection 8
3.3 Periodic maintenance 8
3.4 External cleaning 8
3.5 Operational faults 8

INSTALLATION

4 Technical information 10
4.1 Overview 10
4.2 Main diagram M90.24S M90.28S 11
4.3 Main diagram M90.24SR 12
4.4 Hydraulic specifications 13
4.5 Expansion vessel 13
4.6 Technical data M90.24S, M90.24SR 14
4.7 Technical data M90.28S, M90.28SR 16

5 General requirements 18
5.1 Related documents 18
5.2 Location of appliance 18
5.3 Flue system 18
5.4 Gas supply 18
5.5 Air supply 19
5.6 Ventilation 19
5.7 Water circulation (c.h.) 19
5.8 Domestic water 20
5.9 Electrical supply 20

6 Installation 21
6.1 Warnings 21
6.2 Precautions for installation 21
6.3 Installing the bracket 21
6.4 Overall dimensions 22
6.5 Joints 22
6.6 Mounting the boiler 22
6.7 Fitting the flue system 23
6.8 Choice of flue 23
6.9 Electrical connections 24
6.10 External frost protection 26
6.11 Connecting a M90.24SR or M90.28SR system boiler to a cylinder 26

7 Commissioning 28
7.1 Electrical installation 28
7.2 Gas supply installation 28
7.3 Filling the d.h.w. system 28
7.4 Initial filling of the system 28
7.5 Lighting the boiler 29
7.6 Checking the gas pressure at the burner 29
7.7 Adjusting the burner ignition 30
7.8 Adjustment of useful c.h. output . . 31
7.9 Checking the ignition device 32
7.10 Checking the flue system 32
7.11 Instructing the user 32

MAINTENANCE

8 Gas conversion 33
8.1 Warnings 33
8.2 Procedures 33

9 Maintenance 34
9.1 Warnings 34
9.2 Dismantling the external panels . . . 34
9.3 Emptying the d.h.w. system (combi) 34
9.4 Emptying the c.h. system 34
9.5 Combustion analysis check 35
9.6 Cleaning the primary heat exchanger 35
9.7 Checking the pressurisation in the expansion vessel 35
9.8 Cleaning the burner 35
9.9 Checking the flue 35
9.10 Visual inspection of appliance 36
9.11 Gas pressures and soundness . . . 36

Abbreviations used in the manual
C.h. = Central heating
D.h.w. = Domestic hot water
D.c.w. = Domestic cold water
Combi = combination boilers models M90.24S, M90.28S
C.h. only = system boilers model M90.24SR, M90.28SR

spares & parts online IBASIS.CO.UK

spares & parts online
IBASIS.co.uk©

1 APPLIANCE DESCRIPTION

1.1 Overview

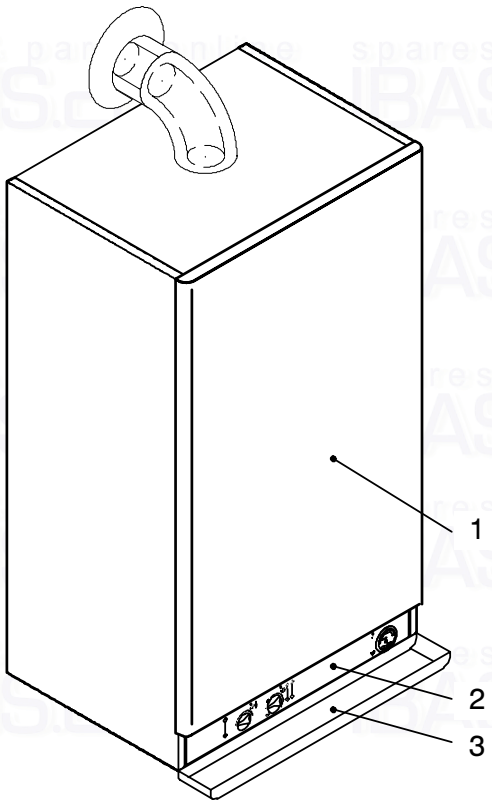

Fig. 1.1

1 Case front panel
2 Control panel
3 Control panel cover

1.2 Control panel

4 C.h. circuit temperature and pressure gauge
5 Time switch (c.h. control) *
6 Lock–out signal lamp
7 Lockout reset button
8 Function selector and c.h. temperature control knob
9 D.h.w. temperature control knob *
10 Appliance operation light

1.3 Isolation valves

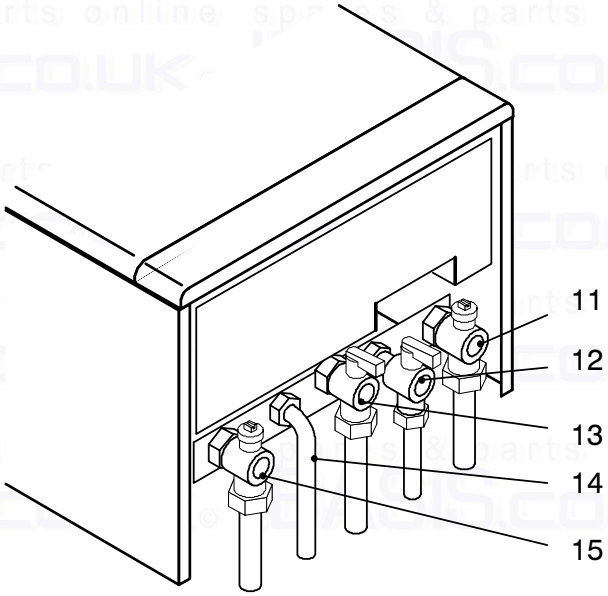

Fig. 1.2 (bottom view of the boiler)

11 C.h. return valve
12 D.c.w. inlet valve *
13 Gas inlet valve
14 D.h.w. outlet pipe *
15 C.h. flow valve

1.4 Technical data

For detailed technical data see section 4.6 or 4.7 of this manual.

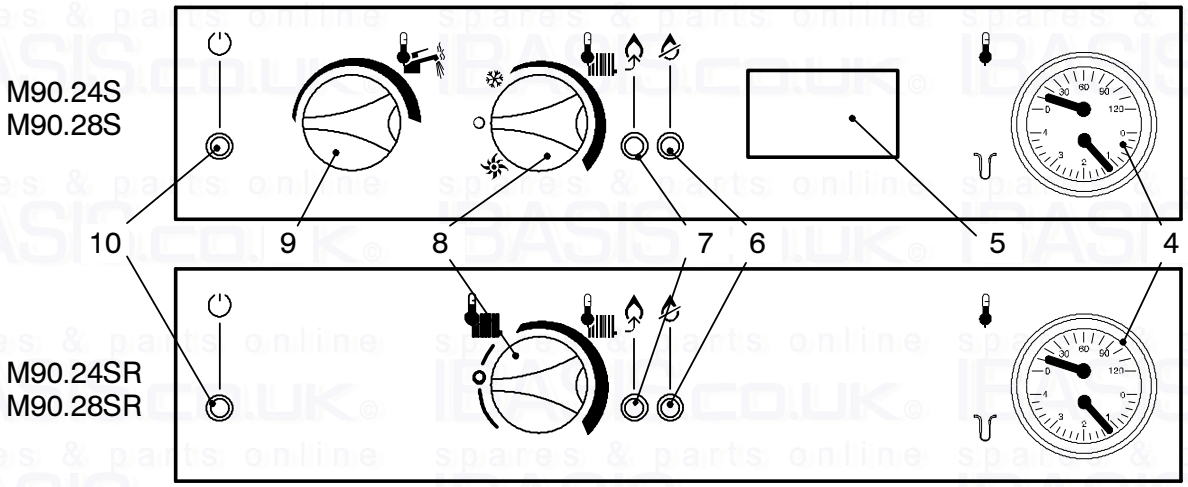

Fig. 1.3

* not on M90.24SR and M90.28SR boilers

2 INSTRUCTIONS FOR USE

USE

2.1 Warnings

In order to guarantee safety and correct operation, it is essential that all the tests are carried out by a competent and responsible service engineer before lighting up the boiler.

The tests are described in the *installation instructions* in section 7 *commissioning.*

Ensure that the c.h. circuit is regularly filled with water (even if the boiler is only used for d.h.w. supply) checking that the pressure indicated on the temperature and pressure gauge 4 is not lower than that shown in Fig. 2.2.

If the pressure reading on the pressure gauge is below that shown in Fig. 2.2, then the system will require topping up. A filling loop is normally provided by the installer for this purpose.

If you are in any doubt regarding this procedure you are advised to contact your Installer or an Approved Engineer.

This appliance is provided with a built in anti–freeze system that operates the boiler when the temperature is below 4 °C
Therefore, when the boiler is not lit or used in cold weather, with consequent risk of freezing **do not switch off the boiler at the fused spur isolation switch or close the gas inlet cock**.

When you do not expect to use the boiler for a long period and the boiler is not to be used for frost protection then follow the instructions given in section 2.6 on page 4.

2.2 Refilling procedure

1 Isolate the boiler from the electrical supply at the fused spur. Reconnect the filling loop as demonstrated in Fig. 2.1.

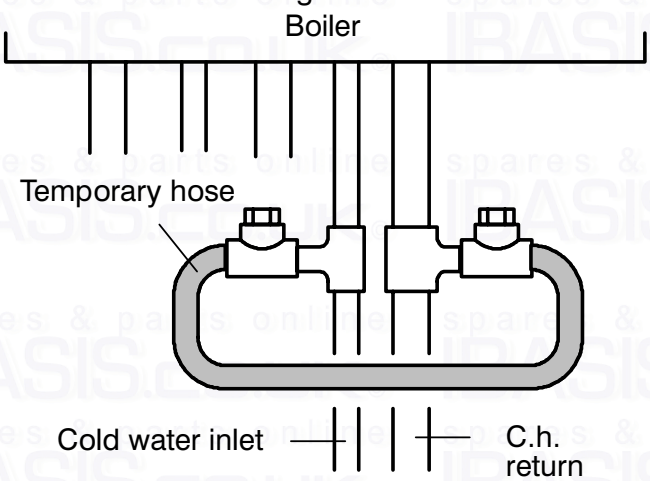

Fig. 2.1

2 Open the valves of the filling loop and watch the gauge until it reaches normal filling pressure as shown in Fig. 2.2.

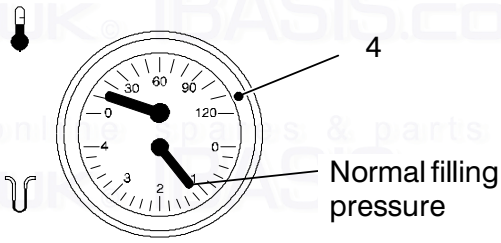

Fig. 2.2

3 Close the valves and remove the filling loop.

If you experience any difficulty with the operation of the boiler, switch off the boiler immediately at the fused spur isolation switch and contact your Installer or an approved Service Engineer

Air introduced into the boiler during this filling process will vent through the automatic air purger fitted to the boiler. You may also find it necessary to vent air from your radiator circuit using your radiator key, however be aware that excessive venting will cause the pressure in the system to drop.

Always ensure that the pressure gauge is set at the required pressure.

2.3 Ignition

1 Check that the valves located in the lower part of the boiler are open (Fig. 2.3).

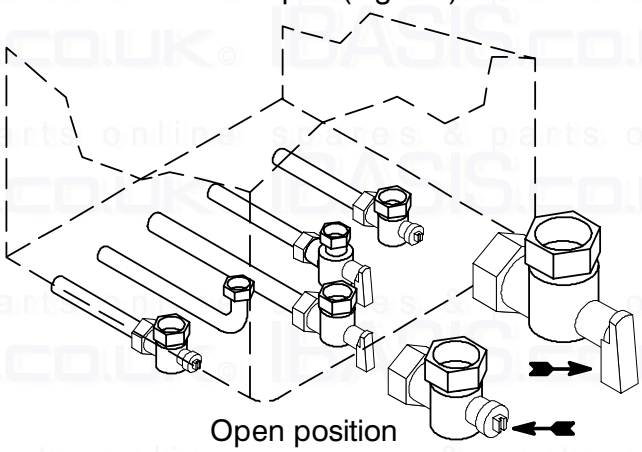

Fig. 2.3

2 Turn on the electricity supply to the boiler, switching on the fused spur isolation switch. The appliance operation light 10 (Fig. 2.4) will flash every 4 seconds (stand–by condition).

3 If the boiler is to be used for c.h. and d.h.w position the function selector 8 as in Fig. 2.4. (combi) or in Fig. 2.5 (c.h. only).
The appliance operation light 10 will flash every 2 seconds (operating boiler).

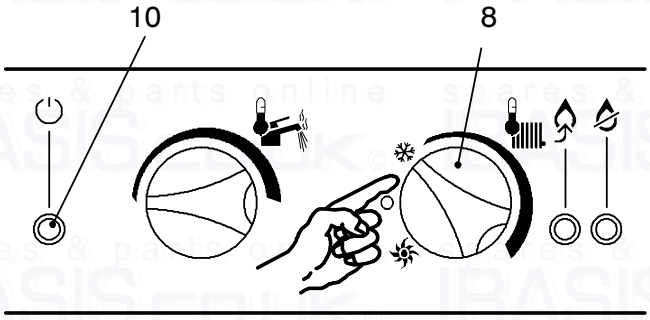

Fig. 2.4

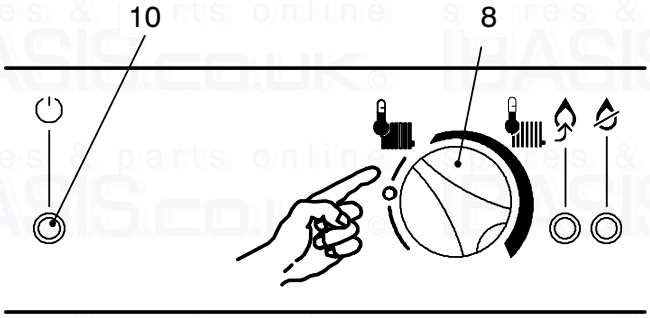

Fig. 2.5

4 If d.h.w. supply only is required (combi), position the function selector 8 as in Fig. 2.6.
The appliance operation light 10 will flash every 2 seconds (operating boiler).

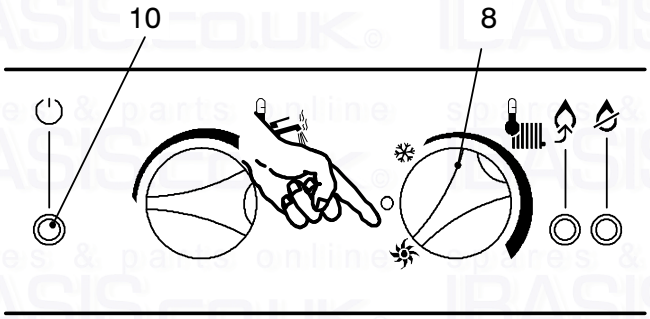

Fig. 2.6

2.4 C.h. circuit temperature

The output temperature of c.h. water is adjustable from a minimum of about 38°C to a maximum of about 85°C (Fig. 2.7), by turning the function selector (8).

Adjustment of c.h. output on the boiler is automatic. The greatest output pre–set in the factory can, however, be reduced in level according to actual system requirements; this does not affect the maximum output in d.h.w. operation.

Such adjustments must be carried out by a qualified person; therefore we advise you to contact your installer or Service Agent.

Adjustment of the boiler temperature alters the gas flow at the burner according to the thermal demand in the system. So it is usual to see the burner lit at the minimum level for more or less long periods.

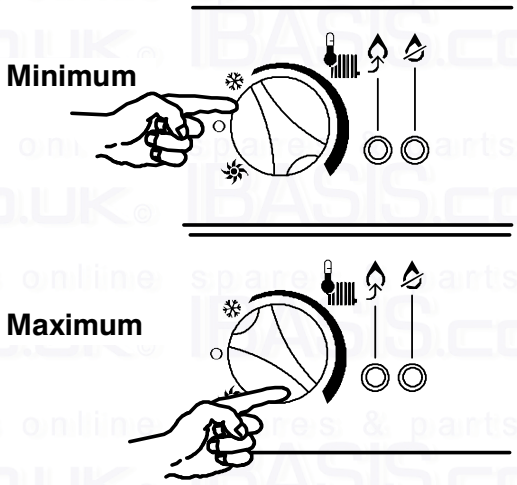

Fig. 2.7

Adjustment

In order to achieve optimal settings for economy and comfort, we recommend adjusting the operating temperature of the c.h. water according to the outside temperature, positioning the knob as follows:

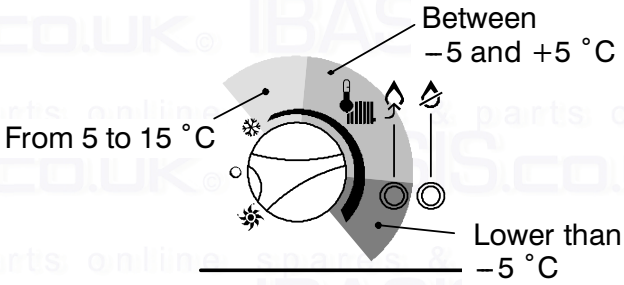

Fig. 2.8

Your qualified installer will be able to recommend the most suitable adjustment for your system.

The temperature and pressure gauge (4, Fig. 1.3 on page 1) will allow you to check that the set temperature is obtained.

2.5 D.h.w. temperature (combi)

The temperature of the d.h.w. leaving the boiler can be varied from a minimum of about 35°C to a maximum of about 55°C (Fig. 2.9), by turning the temperature control knob 9.

USE

USE

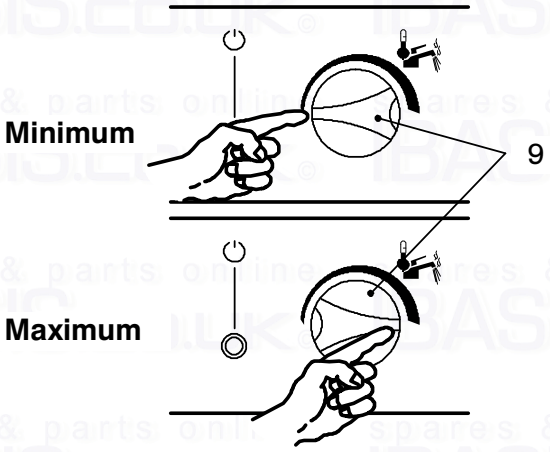

Fig. 2.9

Adjustment of the d.h.w. temperature is completely separate from that of the c.h. circuit.

The adjustment system integrated within the boiler automatically controls the flow of gas to the burner in order to keep the temperature of d.h.w. delivered constant, between the limits of maximum and minimum output.

Where the demand is at a low level or with the temperature set to the minimum, it is normal to see a cycle of lighting and extinguishing of the burner when running.

Adjustment

It is advisable to adjust the d.h.w. temperature to a level commensurate with the demand, minimising the need to mix with cold water. In this way, the automatic control facilities will be fully exploited.

Moreover, where the amount of limescale present in the water may be particularly great, not exceeding the position in **Fig. 2.10** of the d.h.w. temperature control knob 9 corresponding to about 50°C (Fig. 2.10), minimises annoying incidences of scale deposits and clogging.

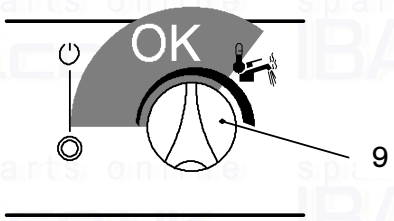

Fig. 2.10

In these cases, however, it is advisable to install a small water treatment device or softener. With such a device you should avoid periodic descaling.

Consequently, the d.h.w. heat exchanger will keep its performance consistent for a longer period of time with resulting gas savings.

If the demand for d.h.w. is so great as to prevent reaching a high enough temperature, have the appropriate output limiting valve installed by your installer or an Authorised Service Engineer.

2.6 Extinguishing

To turn the boiler off set the function selector 8 to the position shown in Fig. 2.11 (combi) or Fig. 2.12 (c.h. only).
The appliance operation light 10 will flash every 4 seconds.

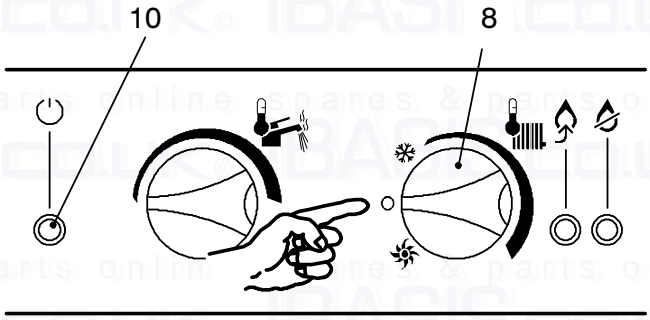

Fig. 2.11

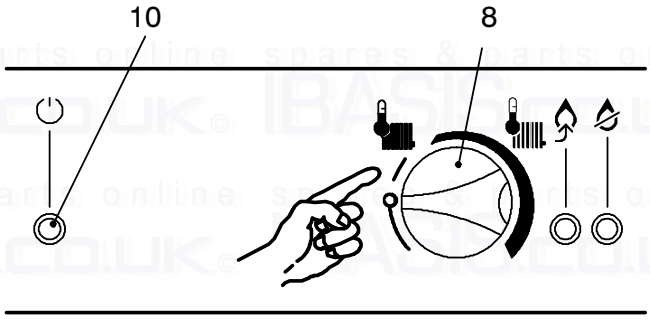

Fig. 2.12

When you do not expect to use the boiler for a long period:

1 Switch off the electricity supply to the boiler, by means of the fused spur isolation switch;
2 Shut off the gas supply cock 13 and the valves for the water circuits fitted under the boiler (Fig. 2.13).

3 Empty the water circuits, if necessary, as shown in the *installation instructions* in the section *maintenance*.

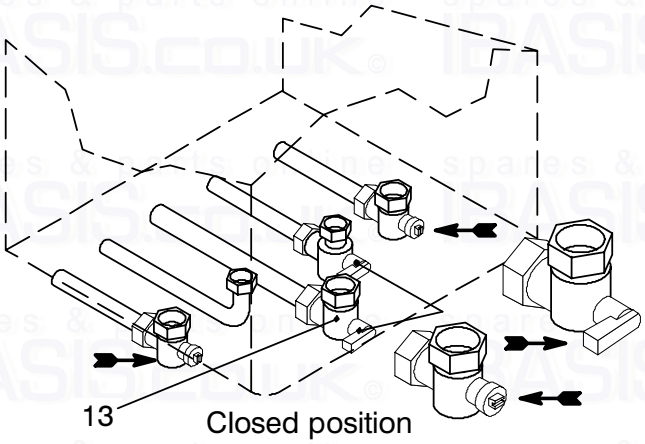

Fig. 2.13

2.7 Built in time switch (combi)

The combi boilers are equipped with a built in electronic time switch (5, Fig. 1.3 on page 1) which controls the c.h. operation.

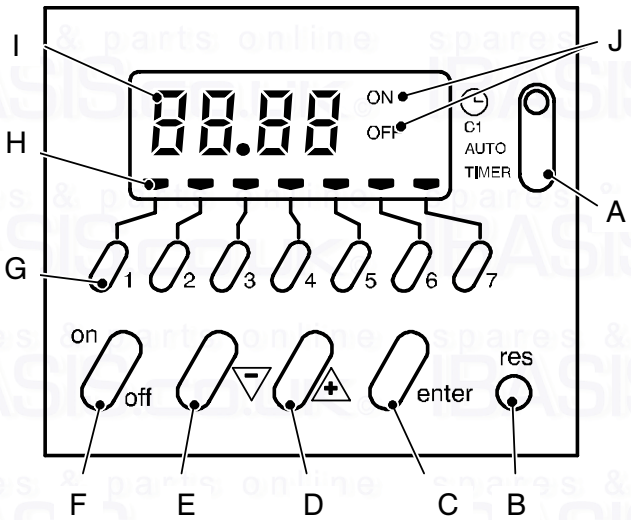

Fig. 2.14

Display and control panel

A Mode selector switch
B Reset button
C Enter button
D Increase "+" setting button
E Decrease "–" setting button
F On–off button
G Day selection buttons
H Day display
I Time display
J ON–OFF display

Setting the current time and weekday

Note: with a new unit or when the reset button B has been pressed, the first day indicator H on the left and the time display I are flashing.

Set the mode selector switch A to the ⏲ position and press the buttons D or E until the current time appears in the display I.
Press the day selection button corresponding to the current day, considering that button 1=Monday, button 2=Tuesday and so on.

The clock starts by moving the switch A to the AUTO position.

Setting example shown in Fig. 2.15:
Current time 16.30, day Thursday.

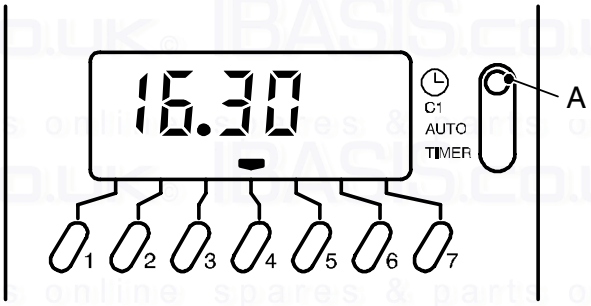

Fig. 2.15

Setting the switching time and day (or days)

20 memory locations are available, corresponding to 10 on–off sequences.

Set the mode selector switch A to the **C1** position. The symbols shown in Fig. 2.16 appears in the display.

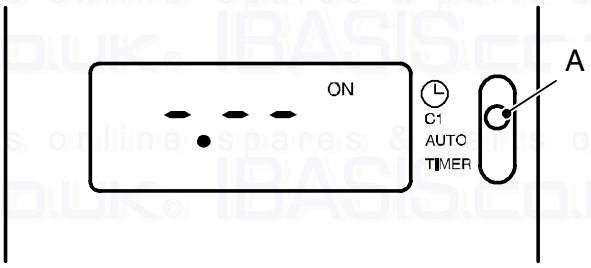

Fig. 2.16

Press the buttons D or E to set the desired ON time.

Press the buttons G to set the desired day or days of operation.

Press the "enter" button C to confirm the setting and to continue programming the OFF time.

Set the OFF time as explained above for the ON setting and confirm by pressing the "enter" button C. Proceed in the same way for other settings.

USE

USE

Setting example shown in Fig. 2.17:
A – ON time 7.45, day Monday to Friday.
B – OFF time 10.30, day Monday to Friday.

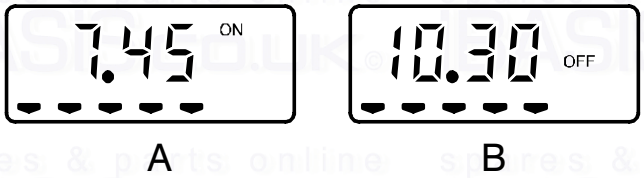

Fig. 2.17

Activating the timed settings

Set the mode selector switch A to the **AUTO** position shown in Fig. 2.18.

The current time and day appears in the display. The ON – OFF display J indicates the current state of operation (according to the settings).

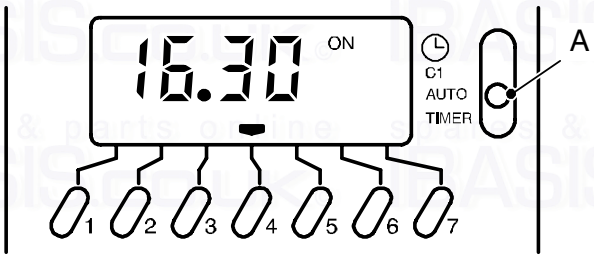

Fig. 2.18

Note: when the mode selector switch A is in the **AUTO** position and the boiler is switched off at the fused spur isolation switch, the display J indicates only the OFF state. The other indications are blanked.

Reading the timed settings

Set the mode selector switch A to the **C1** position. The symbols shown in Fig. 2.16 appears in the display.

Press the “enter” button C. Each time the button is pressed the display shows the details of the next setting.

The day display H gives a flashing indication of the active day or group of days.

Changing or deleting the timed settings

Set the mode selector switch A to the **C1** position. The symbols shown in Fig. 2.16 appears in the display.

Press the “enter” button C until the display shows the setting to be modified or deleted.

The day display H gives a flashing indication of the active day or group of days.

Press the button (or the buttons) G corresponding to the day (or days) for which it is intended to apply the modification. The corresponding day display stops flashing and a new switching time can be set or deleted.

The time setting can be modified now by pressing button D or E and the operation can be switched on or off by pressing the button F.

To delete a time set press the button D or E until the symbols shown in Fig. 2.16 appears in the time display I.

The new settigs are memorized by moving the switch A to a different position.

Manual operation

The operation of the time switch can be forced on or off constantly or for a timed period.

To force **constantly** on or off the timer operation set the mode selector switch A to the **TIMER** position. The symbols shown in Fig. 2.19 appears on the display.

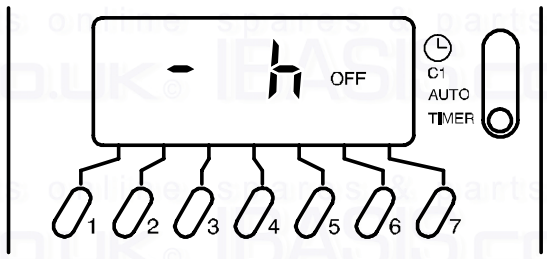

Fig. 2.19

The operation can be switched permanently on or off by pressing the button F and leaving the switch A in the **TIMER** position.

To force **a timed delay** on or off operation, set the mode selector switch A in the **TIMER** position.

Set the time delay by pressing the button D or E and the operation can be forced on or off by pressing the button F.

The time delay can be set within the following ranges:

1 to 23 hours with steps of 1 hour
1 to 27 days with steps of 1 day

The time delay setting is activated by moving the switch A to the **AUTO** position.
The ON – OFF display J flashes indicating that the current state of operation has been forced.

To delete the timed delay setting, set the mode selector switch A in the **TIMER** position, press the button D or E until the symbols shown in Fig. 2.19 appears in the display and then set the mode selector switch A to the **AUTO** position

Setting example shown in Fig. 2.20:
forced ON state for 4 hours.

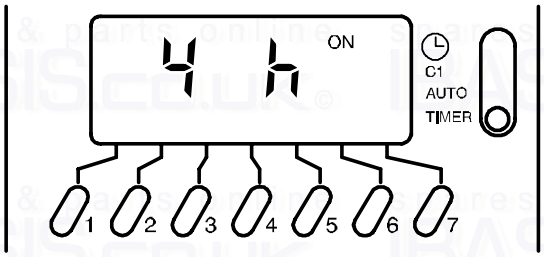

Fig. 2.20

Resetting

To completely reset the timer, press the reset button with a pointed object (pencil).

CAUTION: pushing the reset button will completely erase the settings as well as all the data, including the current time and day.

USE

3 USEFUL ADVICE

USE

3.1 Central heating

For reasonably economical service install a room thermostat.

Never shut off the radiator in the area where the room thermostat is installed.

If a radiator (or a convector) does not heat up, check that no air is present in it and that its valve is open.

If the ambient temperature is too high, do not alter the radiator valves. Reduce the central heating temperature instead by means of the room thermostat and the function selector (8 in Fig. 3.1).

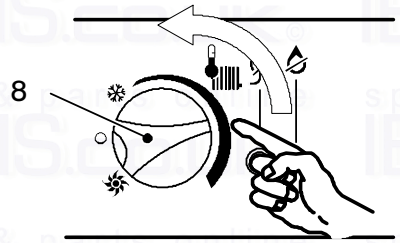

Fig. 3.1

3.2 Frost protection

This appliance is provided with a built in anti–freeze system that operates the boiler when the temperature is below 4 °C
Therefore, when the boiler is not lit and used in cold weather, with consequent risk of freezing **do not switch off the boiler at the fused spur isolation switch or close the gas inlet cock**.

3.3 Periodic maintenance

For efficient and continuous operation of the boiler, it is advisable to arrange maintenance and cleaning by an Authorised Service Centre Engineer, at least once a year.

During the service, the most important components of the boiler will be inspected and cleaned. This service can be part of a maintenance contract.

In particular, you are advised to have the following checks carried out:

- primary heat exchanger;
- domestic hot water heat exchanger;
- burner;
- exhaust fume duct and flue;
- pressurisation of the expansion tank;
- filling up of the central heating circuit;
- bleeding of air from the central heating system;
- general check of the appliance's operation.

3.4 External cleaning

Before carrying out any cleaning, disconnect the appliance from the electrical mains, using the fused spur isolation switch fitted adjacent to the appliance.

To clean the external panels, use a cloth soaked in soapy water. Do not use solvents, abrasive powders or sponges.

Do not carry out cleaning of the appliance and/or its parts with readily flammable substances (for example petrol, alcohols, naphtha, etc.).

3.5 Operational faults

If the lock–out signal lamp comes on

this indicates that the safety lock–out 6 (Fig. 3.2) has stopped the boiler

To re–start the boiler, it is necessary to press the boiler reset button 7 (Fig. 3.2).

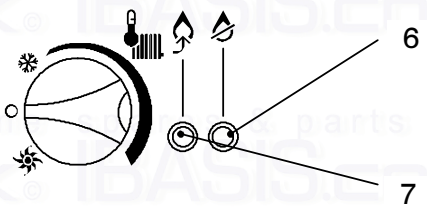

Fig. 3.2

For the first lighting up and following maintenance procedures for the gas supply, it may be necessary to repeat the resetting operation several times so as to remove the air present in the pipework.

If noises due to air bubbles are heard during operation...

you should check that the pressure on the temperature and pressure gauge (Fig. 2.2 on page 2) is not below the correct setting.
If required, top up the system correctly, as described in the section 2.2 of this manual.
Bleed any air present in the radiators, if necessary.

If the pressure on the temperature and pressure gauge (4 on page 1) has gone down...

it is necessary to top up the appliance with water again, so as to raise the pressure to an adequate level as described in the section 2.2 of this manual.

If topping up with water has to be done very frequently, have the system checked for leaks.

If water comes out of the pressure relief valve

Check on the temperature and pressure gauge (4 on page 1) that the pressure in the central heating circuit is not close to 3 bars. In this case, temperature rise in the circuit can cause the pressure relief valve to open.

So that this does not happen and to decrease the pressure to a normal value, it is advisable to vent some of the water in the appliance through the bleed valves present in the radiators.

If in time, a reduction in domestic hot water supply is observed...

The likely causes may be impurities caught in the domestic hot water flow switch filter or limescale deposited in the domestic hot water heat exchanger. It is advisable to have the appliance cleaned out by an Authorised Service Centre Engineer.

If water should occasionally leak from the boiler...

shut off the valves positioned under the boiler (Fig. 2.13 on page 5) and call an Authorised Service Centre Engineer.

If the appliance operation light 10 (Fig. 3.3) flashes very quickly the boiler is faulty.

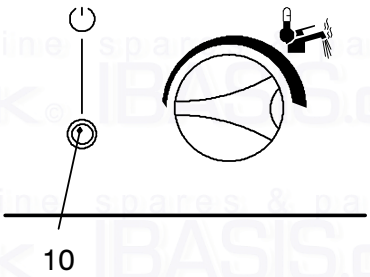

Fig. 3.3

In this case or in case of problems other than those mentioned here, switch off the boiler, as described in section 2.6 on page 4 and call a competent and responsible service engineer.

4 TECHNICAL INFORMATION

4.1 Overview

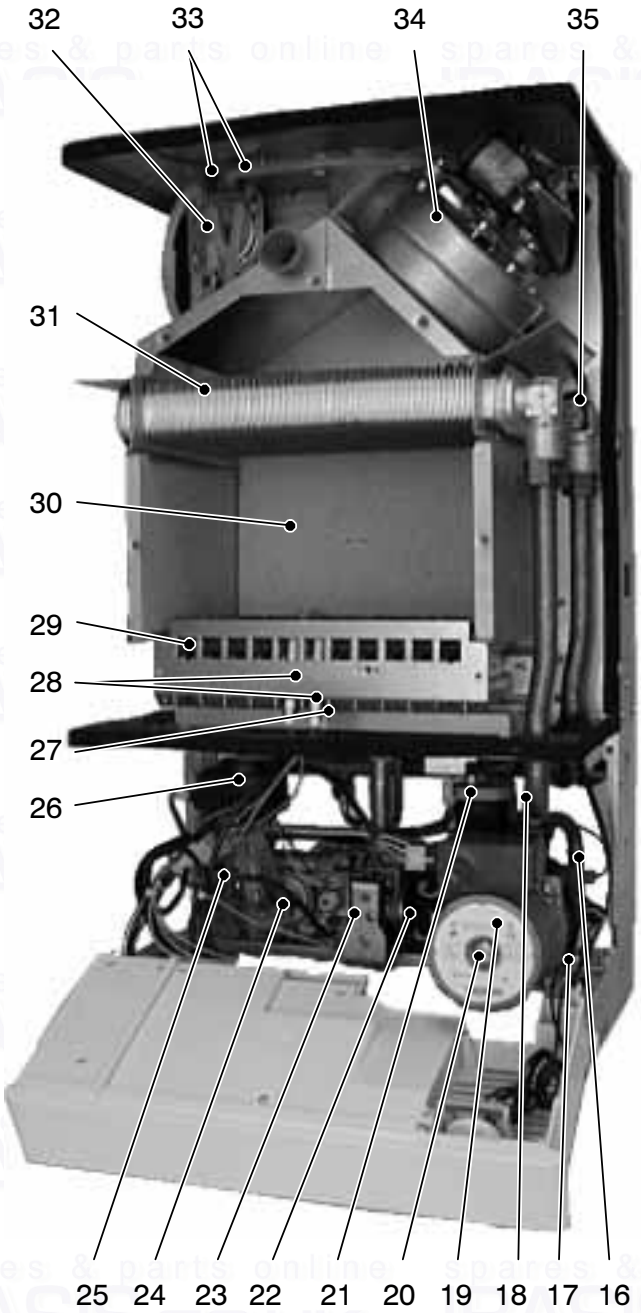

Fig. 4.1

11 C.h. return valve
12 Domestic cold water inlet valve
13 Gas inlet valve
14 D.h.w. outlet pipe
15 C.h. flow valve
16 D.h.w. temperature probe NTC
17 Main circuit drain valve
18 C.h. pressure relief valve
19 Pump
20 Pump vent plug
21 Automatic air purger valve
22 D.h.w. flow switch
23 Modulation gas valve
24 Primary circuit flow switch
25 C.h. temperature probe NTC
26 Three–way diverter valve
27 Flame–detecting electrode
28 Ignition electrodes
29 Burner
30 Combustion chamber
31 Primary heat exchanger
32 Air pressure switch
33 Air switch pressure test points
34 Fan
35 Safety thermostat
36 Modulation operator
37 Gas valve outlet pressure test point
38 Gas valve inlet pressure test point
39 D.h.w. heat exchanger
40 C.h. expansion tank
41 By–pass valve
42 Venturi device
43 Domestic water circuit filter
44 D.h.w. flow limiter
45 Flue outlet pipe
46 Air intake pipe

4.2 Main diagram mod. M90.24S M90.28S

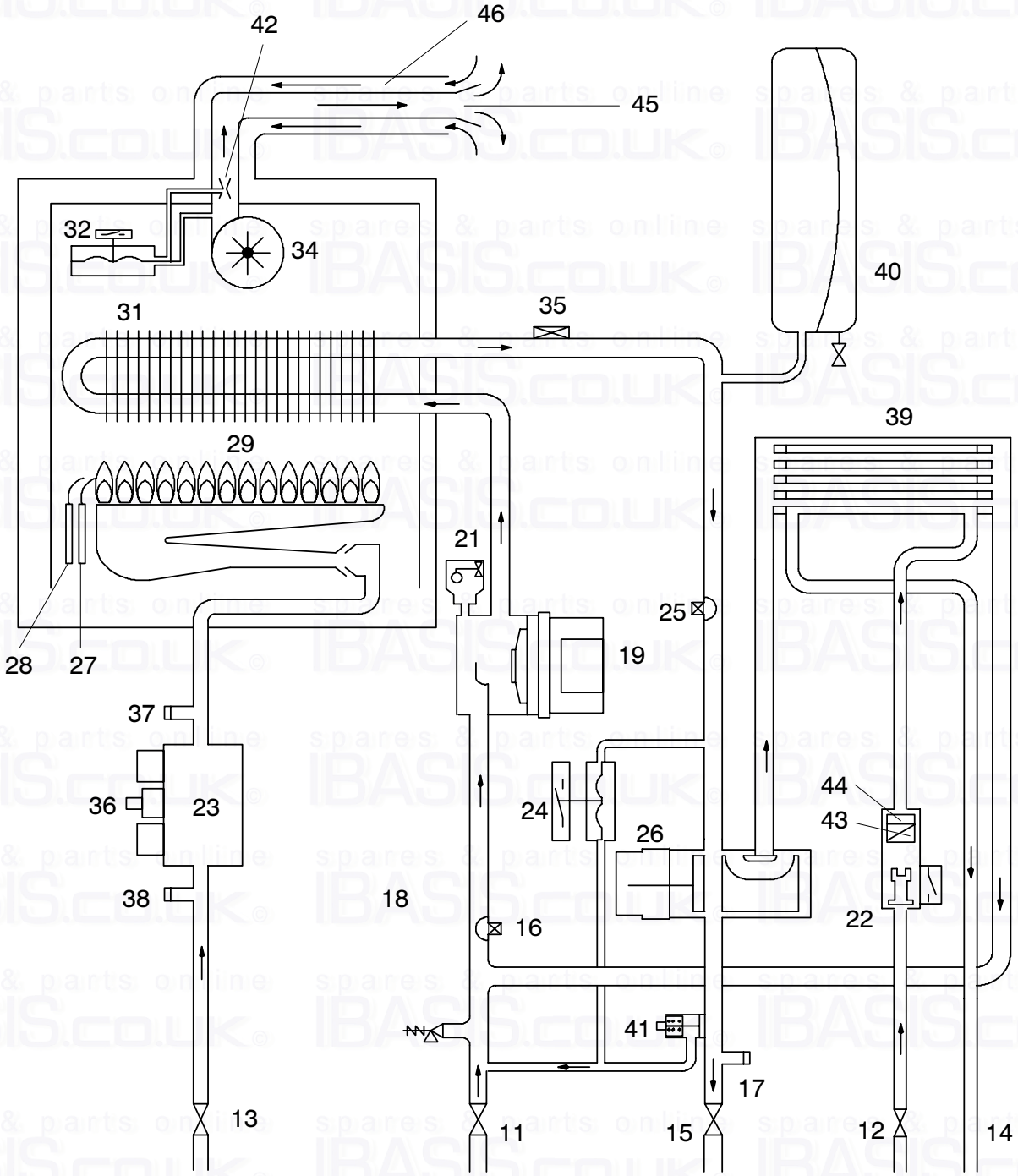

Fig. 4.2

4.3 Main diagram mod. M90.24SR M90.28SR

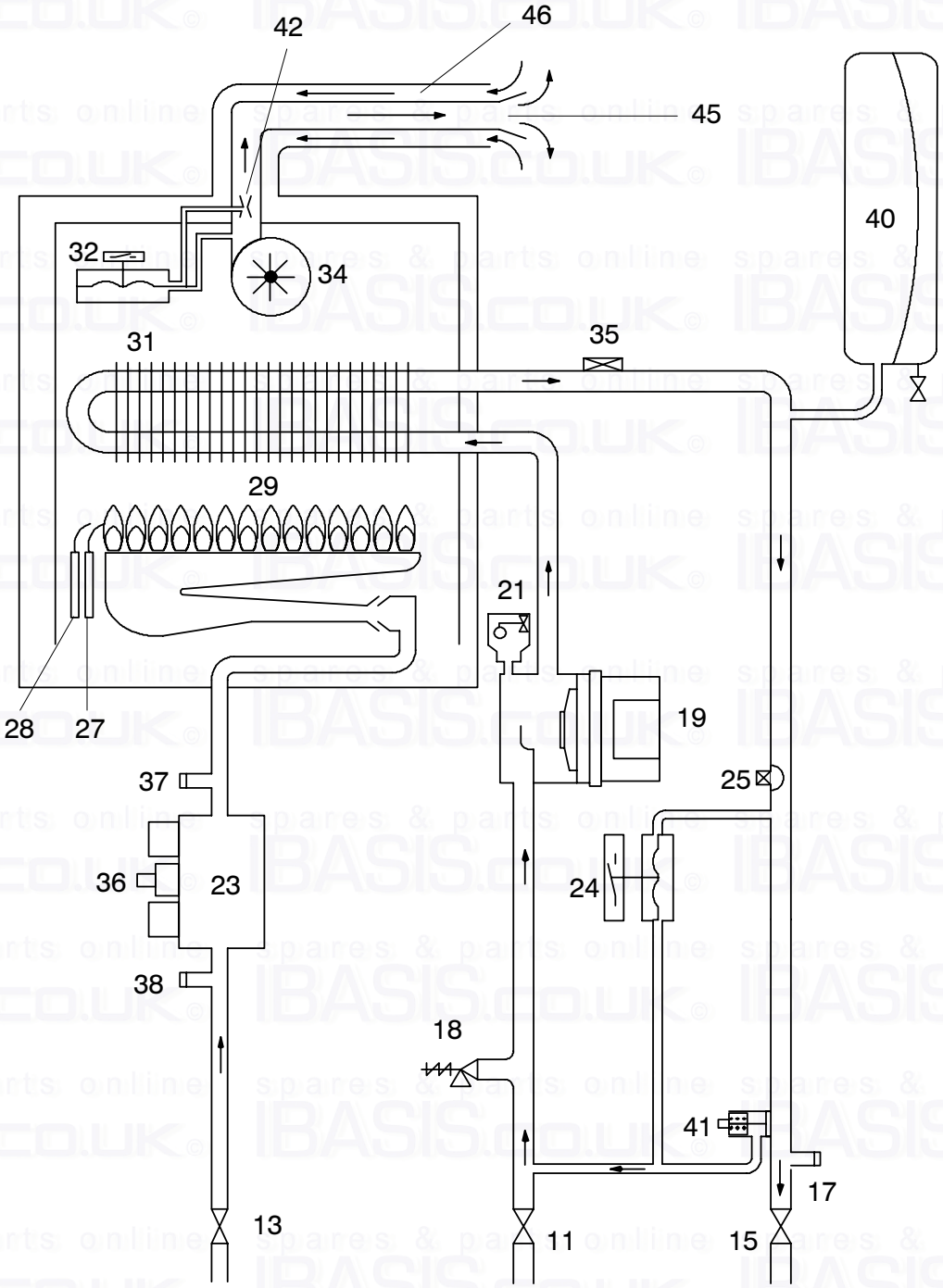

Fig. 4.3

4.4 Hydraulic specifications

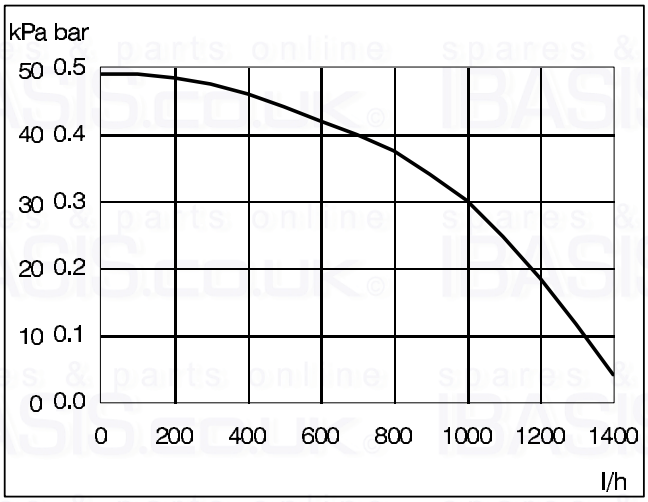

Fig. 4.4

The hydraulic specifications in Fig. 4.4 represent the pressure (available head for the central heating system) as a function of the flow rate.

The load loss due to the boiler has already been subtracted.

Output with thermostat cocks shut off

The boiler is fitted with an automatic by–pass valve (41 on page 10), which protects the primary heat exchanger.

In case of excessive reduction or total blockage of water circulation in the central heating system owing to closure of the thermostatic valves or system component cocks, the by–pass valve ensures a minimum flow of water through the primary heat exchanger.

4.5 Expansion vessel

Note: this boiler is designed for operation only in a sealed central heating system

The height difference between the pressure relief valve and the highest point in the system may be 7m at most.

For greater differences, increase the pre–load pressure in the expansion vessel (40 on page 10) and the system, when cold, by 0.1 bar for each additional 1m.

Capacity	l	6,0
Pre–load pressure	kPa	100
	bar	*1,0*
Maximum volume of water in the system *	l	115

Tab. 4.1

* Where conditions are:

- Average maximum temperature of the system is 80°C
- Initial temperature when filling up the system is 10°C

For systems with volumes greater than 115l, an additional expansion vessel must be provided.

INSTALLATION

INSTALLATION

4.6 Technical data mod. M90.24S, M90.24SR

Nominal heat input	kW	26,6
	BTU/h	*90 754*
Minimum heat input	kW	11,0
	BTU/h	*37 530*
Maximum useful output	kW	24,0
	BTU/h	*81 883*
Minimum useful output	kW	9,3
	BTU/h	*31 730*

Central heating		
Maximum temperature	°C	85
Minimum temperature	°C	38
Maximum pressure	kPa	300
	bar	*3*
Minimum pressure	kPa	30
	bar	*0,3*
Available head (in 1000 l/h)	kPa	30
	bar	*0,3*

Domestic hot water (M90.24S only)		
Maximum temperature	°C	55
Minimum temperature	°C	35
Maximum pressure	kPa	1 000
	bar	*10*
Minimum pressure	kPa	30
	bar	*0,3*
Flow rate		
minimum	l/min	2,5
30° rise	l/min	11,1
35° rise	l/min	9,5
40° rise	l/min	8,3

Injectors	
Natural G20	130
Butane G30	77
Propane G31	77

Net calorific value at 15 °C and 1013,25 mbar
G 20 34,02 MJ/m^3
G 30 45,6 MJ/kg
G 31 46,4 MJ/kg
1 mbar approximately equals 10 mm H_2O

Gas supply pressures				
Gas		norm.	min	max
Natural	Pa	2 000	1 700	2 500
G20	*mbar*	*20*	*17*	*25*
Butane	Pa	2 900	2 000	3 500
G30	*mbar*	*29*	*20*	*35*
Propane	Pa	3 700	2 500	4 500
G31	*mbar*	*37*	*25*	*45*

Gas pressures at the burner				
Gas		min	max	Ignition
Natural	Pa	150	1 100	600
G20	*mbar*	*1,5*	*11,0*	*6,0*
Butane	Pa	500	2 760	1 200
G30	*mbar*	*5,0*	*27,6*	*12*
Propane	Pa	610	3 570	1 300
G31	*mbar*	*6,1*	*35,7*	*13*

Gas rate			
Gas		min	max
Natural G20	m^3/h	1,16	2,82
Butane G30	kg/h	0,87	2,09
Propane G31	kg/h	0,85	2,06

Electrical Data		
Voltage	V~	230
Frequency	Hz	50
Power consumption	W	150
Protection degree		IPX4D
External fuse rating	A	3
Internal fuse rating	A	1,6 T

Flue design		
Minimum venturi pressure	Pa	–120
	mbar	*–1,2*
Flue pipe diameter		
Coaxial	mm	60/100
Twin split pipes	mm	80
Roof	mm	80/125
Nominal heat flow rate*	kW	26,6
Exhaust temperature*	°C	145
Smoke production*	kg/h	55,1

Flue gas figures		
Nominal heat input*	kW	26.6
CO_2 content	%	7,0
O_2 content	%	8,4
CO content	ppm	150
Exhaust temperature*	°C	145

Other specifications		
Height	mm	703
Width	mm	400
Depth	mm	310
Weight (dry)	kg	37
Water volume in the boler (up to 1 bar)	l (kg)	1,0

* Values refer to tests with a 1 m chimney working at the nominal heat input

INSTALLATION

4.7 Technical data mod. M90.28S, M90.28SR

Nominal heat input	kW	31,1
	BTU/h	*106 107*
Minimum heat input	kW	13,0
	BTU/h	*44 353*
Maximum useful output	kW	28,0
	BTU/h	*95 530*
Minimum useful output	kW	11,0
	BTU/h	*37 530*

Central heating		
Maximum temperature	°C	85
Minimum temperature	°C	38
Maximum pressure	kPa	300
	bar	*3*
Minimum pressure	kPa	30
	bar	*0,3*
Available head (in 1000 l/h)	kPa	30
	bar	*0,3*

Domestic hot water (M90.28S only)		
Maximum temperature	°C	55
Minimum temperature	°C	35
Maximum pressure	kPa	1 000
	bar	*10*
Minimum pressure	kPa	30
	bar	*0,3*
Flow rate		
minimum	l/min	2,5
30° rise	l/min	13,3
35° rise	l/min	11,5
40° rise	l/min	10,0

Injectors	
Natural G20	130
Butane G30	77
Propane G31	77

Gas supply pressures				
Gas		norm.	min	max
Natural G20	Pa	2 000	1 700	2 500
	mbar	*20*	*17*	*25*
Butane G30	Pa	2 900	2 000	3 500
	mbar	*29*	*20*	*35*
Propane G31	Pa	3 700	2 500	4 500
	mbar	*37*	*25*	*45*

Gas pressures at the burner				
Gas		min	max	Ignition
Natural G20	Pa	120	1 100	600
	mbar	*1,2*	*11,0*	*6,0*
Butane G30	Pa	450	2 760	1 200
	mbar	*4,5*	*27,6*	*12*
Propane G31	Pa	570	3 570	1 300
	mbar	*5,7*	*35,7*	*13*

Gas rate			
Gas		min	max
Natural G20	m^3/h	1,37	3,29
Butane G30	kg/h	1,02	2,45
Propane G31	kg/h	1,00	2,41

Electrical Data		
Voltage	V~	230
Frequency	Hz	50
Power consumption	W	170
Protection degree		IPX4D
External fuse rating	A	3
Internal fuse rating	A	1,6 T

For the net calorific values of G20, G30, G31 see the technical data at page 14

1 mbar approximately equals 10 mm H_2O

Flue design		
Minimum venturi pressure	Pa	–140
	mbar	*–1,4*
Flue pipe diameter		
Coaxial	mm	60/100
Twin split pipes	mm	80
Roof	mm	80/125
Nominal heat flow rate*	kW	31,1
Exhaust temperature*	°C	165
Smoke production*	kg/h	70,6

Flue gas figures		
Nominal heat input*	kW	31,1
CO_2 content	%	6,3
O_2 content	%	9,7
CO content	ppm	<100
Exhaust temperature*	°C	165

Other specifications		
Height	mm	703
Width	mm	400
Depth	mm	310
Weight (dry)	kg	39
Water volume in the boler (up to 1 bar)	l (kg)	1,1

* Values refer to tests with a 1 m chimney working at the nominal heat input

5 GENERAL REQUIREMENTS

This appliance must be installed by a competent person in accordance with the Gas Safety (installation & Use) Regulations.

5.1 Related documents

The installation of this appliance must be in accordance with the relevant requirements of the current Gas Safety (Installation & Use) Regulations, the Local Building Regulations, the current I.E.E. Wiring Regulations, the Regulations and by–laws of the local water undertaking, and in Scotland, in accordance with the Building Standards (Scotland) Regulation. Health and safety document n° 635 ”Electricity at work regs.”.

It should also be in accordance with the British Standard Codes of Practice:

INSTALLATION

5.2 Location of appliance

The appliance may be installed in any room or internal space, although particular attention is drawn to the requirements of the current I.E.E. Wiring Regulations, and in Scotland, the electrical provisions of the Building Regulations applicable in Scotland, with respect to the installation of the combined appliance in a room containing a bath or shower.

Where a room–sealed appliance is installed in a room containing a bath or shower, any electrical switch or appliance control, utilising mains electricity should be so situated that it cannot be touched by a person using the bath or shower.

The location must permit the provision of an adequate flue and termination.

For unusual locations special procedures may be necessary and BS 6798 gives detailed guidance on this aspect.

A compartment used to enclose the appliance must be designed specifically for this purpose.

This appliance is not suitable for external installation.

5.3 Flue system

The provision for satisfactory flue termination must be made as described in BS 5440 part 1.

The appliance must be installed so that the flue terminal is exposed to external air.

It must not be installed so that the terminal discharges into an other room or space as an outhouse or lean–to. It is important that the position of the terminal allows a free passage of air across at all times.

The terminal should be located with due regard for the damage or discoloration that might occur to building products in the vicinity.

In cold and/or humid weather water vapour may condense on leaving the flue terminal; the effect of such ”steaming” must be considered.

The minimum acceptable spacing from the terminal to obstructions and ventilation openings are specified in Fig. 5.1.

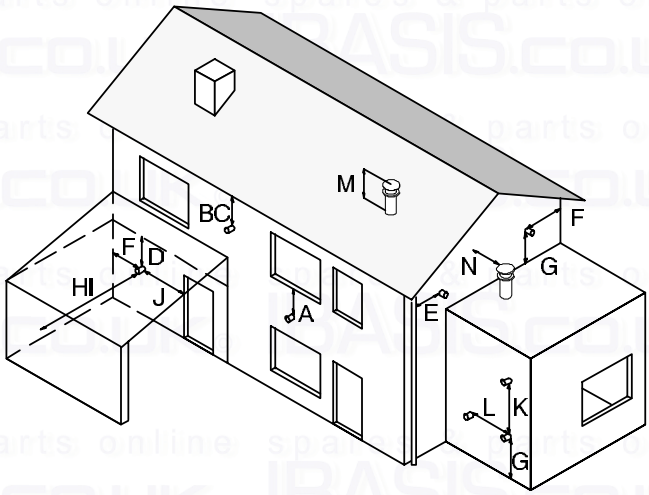

Fig. 5.1

	Terminal position	mm
A .	Directly below a window or other opening	300
B .	Below gutters, soil pipes or drain pipes	75
C .	Below eaves	200
D .	Below balconies or car port roof	650*
E .	From vertical drain pipes and soil pipes	75
F .	From internal or external corners	300*
G .	Above ground or balcony level	300
H .	From a surface facing a terminal	600
I . .	From a terminal facing a terminal	1 200
J .	From an opening in the car port (e.g. door, window) into dwelling	1 200
K .	Vertically from a terminal in the same wall	1 500
L .	Horizontally from a terminal in the same wall	300
M	Above the roof pitch with roof slope less than or equal to 30°	600
	Above the roof pitch with roof slope more than 30°	1 000
N .	From wall face	600

* specific manufacturer requirements

5.4 Gas supply

The Gas meter is connected to the service pipe by the local gas region or a local gas region contractor.

If the gas supply for the boiler serves other appliances ensure that an adequate supply is available both to the boiler and the other appliance when they are in use at the same time.

Pipework must be of adequate size. Pipes of a smaller size than the boiler inlet connection should not be used.

Installation pipes should be fitted in accordance with BS 6891 and the complete installation should be tested for soundness.

5.5 Air supply

The room in which the boiler is installed does not require a purpose provided air vent.

5.6 Ventilation

If installed in a cupboard or compartment, it is not necessary to provide additional ventilation for cooling for this particular product. However consideration must be given to clearance requirements for maintenance (see section 6.2) and under no circumstances must stored articles be allowed to come into contact with the boiler or flue pipe.

5.7 Water circulation (c.h.)

Detailed recommendations are given in BS 6798 and BS 5449; the following notes are given for general guidance.

Pipework

Copper tubing to BS EN 1057 is recommended for water pipes. Jointing should be either with capillary soldered or with compression fittings.

Where possible pipes should have a gradient to ensure air is carried naturally to air release points and water flows naturally to drain taps.

The appliance has a built–in automatic air release valve, it should be ensured as far as possible that the appliance heat exchanger is not a natural collecting point for air.

Except where providing useful heat, pipes should be insulated to prevent heat loss and to avoid freezing.

Particular attention should be paid to pipes passing through ventilated spaces in roofs and under floors.

By–pass

The appliance includes an automatic by–pass valve which protects the main heat exchanger in case of reduced or interrupted water circulation through the heating system due to the closing of thermostatic valves or cock–type valves within the system.

The by–pass is calibrated to assure a minimum flow of 500–600 lts/hr through the main heat exchanger.

If you are installing a system that includes thermostatic radiator valves (TRV) and/or small bore (8–10 mm) it may be necessary to fit an external by–pass to facilitate correct operation of the boiler.

Air release points

These must be fitted at all high points where air will natural collect and must be sited to facilitate complete filling of the system.

Expansion vessel

The appliance has an integral sealed expansion vessel to accommodate the increase of water volume when the system is heated.

Refer to Tab. 4.1 on page 13 for its technical data.

If the heating circuit has an unusually high water content, calculate the total expansion and add an additional sealed expansion vessel with adequate capacity.

Mains water feed: central heating

There must be no direct connection to the mains water supply even through a non return valve, without the approval of the Local Water Authority.

Mains water feed: hot water supply

The domestic section of the boiler is designed to withstand an internal domestic water pressure of 10 bar. Where it is likely that the mains domestic water pressure may exceed 5 bar, it is possible due to internal “water hammer” effects that the pressure within the domestic system can increase to a level in excess of the 10 bar limit.

In these circumstances it is therefore recommended that a 3 bar pressure reducing valve be fitted to the incoming mains water supply and a mini expansion vessel installed on the domestic circuit.

These devices will protect the boiler and the domestic system from damage due to excessive domestic water pressure.

INSTALLATION

Filling

A method for initially filling the system and replacing water lost during servicing must be provided and it must comply with local water authority regulations.

A possible method is shown in Fig. 5.2.

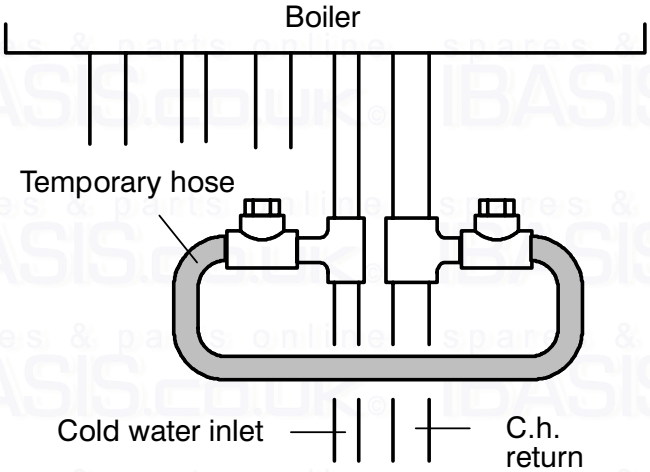

Fig. 5.2

The installer should ensure that no leaks exist either inside the boiler or on the system as frequent filling of the system could cause premature scaling of the heat exchanger.

5.8 Domestic water

The domestic water installation must be in accordance with the relevant recommendations of BS 5546. Copper tubing to BS EN 1057 is recommended for water carrying pipework and must be use for pipework carrying potable water.

5.9 Electrical supply

Warning, this appliance must be earthed.

External wiring to the appliance must be carried out by a competent person and be in accordance with the current I.E.E. Regulations and any local regulations which apply.

The boiler is supplied for connection to a 230 V~ 50 Hz supply. The supply must be fused at 3A.

The method of connection to the electricity supply must facilitate complete electrical isolation of the appliance by the use of a fused double pole isolator having a contact separation of at least 3 mm between poles or alternatively, by the use of a 3A fused three pin plug and unswitched shuttered socket outlet both complying with BS 1363.

The point of connection to the electricity supply must be readily accessible and adjacent to the appliance except were the appliance is installed in a bathroom this must then be sited outside the bathroom.

6 INSTALLATION

6.1 Warnings

The use of gas appliances is subject to statutory control; it is essential to observe the current regulations and laws in force (see also chapter 5).

The appliance must discharge combustion products directly outside or into a suitable exhaust duct designed for this purpose.

Combustion products must be discharged using original flue kits only, since they are integral parts of the boiler.

For LPG, the appliance must also conform with the requirements of the distributors and comply with current Regulations and laws in force.

The safety relief valve must be connected to a suitable drain, or discharge in a safe manner.

The electrical wiring must conform with current Regulations, in particular:

- the boiler **must** be earthed using the correct bonding clamp.
- a fused spur isolation switch, with a gap of at least 3 mm between the contacts must be installed near to the boiler. Refer to section 6.9 in this chapter for the electrical connections.

In no circumstances will the manufacturer be held responsible if the warnings and instructions contained in this manual have not been complied with.

6.2 Precautions for installation

For the installation proceed as follows:

- The boiler must be fixed to a strong wall.
- The dimensions for the exhaust fume duct detailed in section 6.7 and the correct procedures for installing the duct, depicted in the instruction leaflet included with the flue kit, must be complied with during installation.
- To allow maintenance procedures it is necessary to leave the minimum gaps indicated in Fig. 6.1.

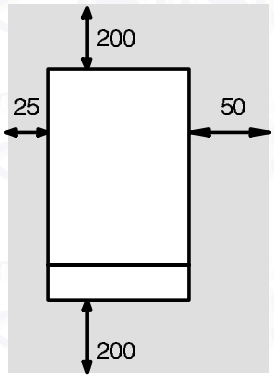

Fig. 6.1 (all dimensions in mm)

- When installing the boiler in a cupboard, cover or alcove allow at least 50mm permanent clearance from the front face of the boiler. Also ensure sufficient clearance to allow free access for servicing and the lowering of the front control panel.
- If the boiler is installed outside, cover the appliance to protect it against the elements and add some special anti–freeze (neutralised) to the c.h. system.
- Before installing the boiler on an existing c.h. system, flush it out thoroughly before fitting the boiler, so as to remove muddy deposits.
- It is advisable to equip the system with a sediment filter, or use a water–treatment product in the circulating water.
  The latter option in particular, not only cleans out the system, but also has an anti–corrosive effect by promoting formation of a protective skin on metal surfaces and neutralising gases present in the water.
  We recommend the use of a suitable universal inhibitory to protect the c.h. system from corrosion.

6.3 Installing the bracket

Precautions

Before mounting the bracket, check that the dimensions for fitting the exhaust fume duct are complied with (refer to the leaflet included with the flue kit, packed separately).

Utilise the paper template supplied with the boiler to determine the fixing position for the bracket and boiler. Securely mount the bracket to the wall using appropriate fixings suitable for the type of wall construction and capable of supporting the total (wet) load. Refer to the weight given in the technical data tables specific for each model.

6.4 Overall dimensions

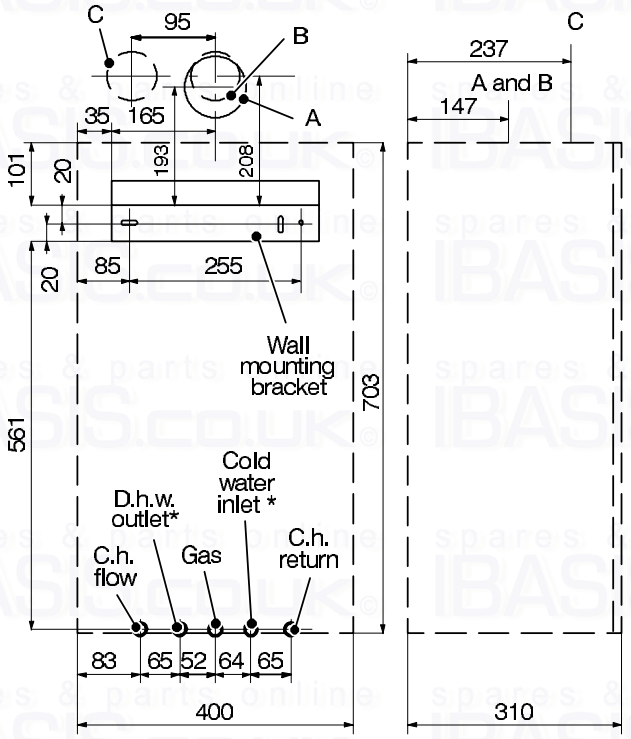

* not present on c.h. only boilers

A – air intake/flue outlet pipe ø 100 (co–axial)
B – flue outlet pipe ø 80 (twin kit)
C – air intake pipe ø 80 mm (twin kit)

Fig. 6.2 (all dimensions in mm)

6.5 Joints

Functions	Pipe sizes
Gas, c.h. return, c.h. flow	ø 22
D.c.w. inlet *	ø 15
D.h.w. outlet *	ø 15
Pressure relief valve	ø 15
* not present on M90.24SR and M90.28SR models	

Tab. 6.1 (sizes in mm o.d.)

6.6 Mounting the boiler

1 Take the protective caps off the boiler pipework.
2 Thoroughly clean the connections.
3 Mount the boiler on its bracket.
4 Fix the c.h. valves A and gas cock B (¾”) to the boiler using the ¾” gaskets (Fig. 6.3)
5 Fix the ø 22 mm pipes C (c.h. circuit) to the c.h. valves A and the ø 22 mm pipe D (gas) to the cock B using the ¾” gaskets.
6 Repeat the above procedure for the d.c.w. inlet utilising the ½” cold water inlet valve E, the ø 15 mm copper tail F with its connection nut and two ½” gaskets.
7 Fix the ø 15 mm copper tail G with the ½” connection nut and a ½” gasket.
8 Connect the pipe H (Fig. 6.4) from the pressure relief valve to the safety discharge pipework.

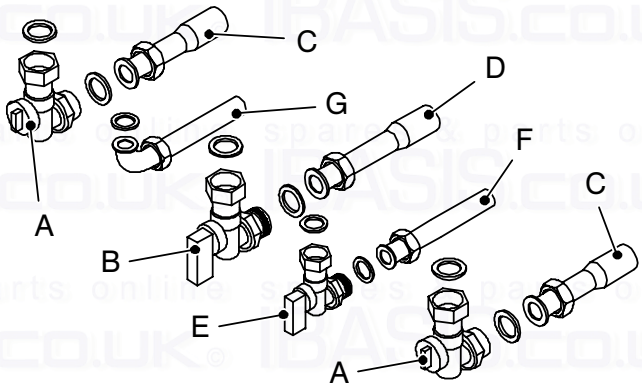

Fig. 6.3

Fig. 6.4

6.7 Fitting the flue system

Refer to the assembly instructions contained within the chosen flue kit packaging for the correct assembly and installation.

For co–axial pipes longer than 1m and for twin pipes longer than 6 metres, the flue restrictor ring indicated in Fig. 6.5 must be removed.

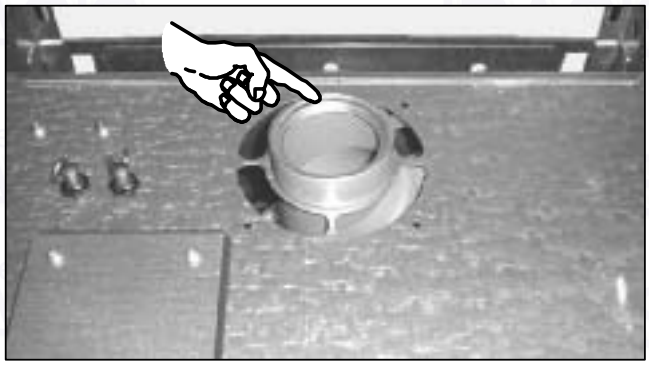

Fig. 6.5

6.8 Choice of flue

The following flue kits are available for connecting to the boiler:

Standard horizontal flue kit (Fig. 6.6A)

Co–axial 60/100mm – nominal length 1m

This kit is normally supplied with the boiler and can be fitted to allow discharge to the rear or either side of the boiler via the flanged boiler adapter elbow. Minimum length required is 0.5m. Maximum length of 2.65m for M90.24S and 2m for M90.28S model can be achieved utilising extensions. This flue system can only be used to discharge horizontally, it is not designed to enable termination in the vertical plane.

Vertical kit with 90˚ elbow (Fig. 6.6B)

Co–axial 60/100mm – nominal length 1m with straight flanged adapter.

Supplied with a straight flanged adapter, this kit allows for a vertical rise of up to 1m from the boiler and a 90˚ elbow for connection to the standard horizontal flue kit. In all circumstances the flue terminal must discharge horizontally and the total flue length must not exceed 2.65m on the M90.24S and 2 m on the M90.28S.

Elbows 45˚ & 90˚ (Fig. 6.6C)

Co–axial 60/100mm.

Elbow kits enable the standard flue kits to be offset to overcome obstructions or ensure the correct clearances for the flue terminal. Each elbow used in addition to the standard flanged elbow reduces the overall acceptable length of the flue system as follows:

45˚ reduce length by 0.5m.
90˚ reduce length by 1m.

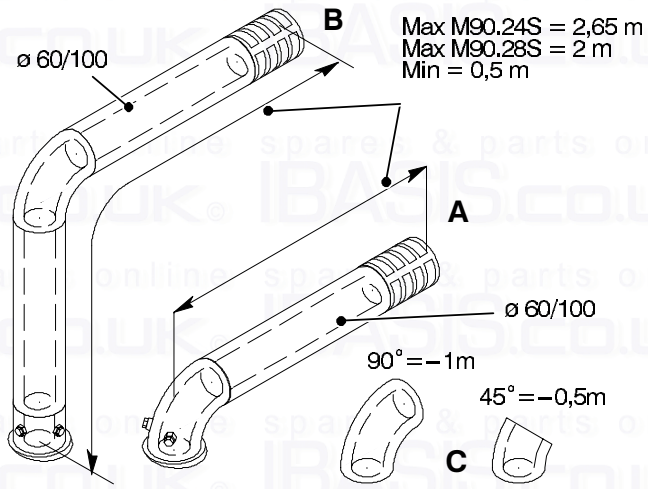

Fig. 6.6

Twin pipe kits ø 80 mm (Fig. 6.7)

Various twin (split) pipes kits and optional accessories (elbows) are available to assist in the termination of the flue where the boiler is installed in a location remote to an outside wall. These kits allow for separation of the air supply pipe from the pipe that discharges the exhaust gases. Consequently it is possible to extend the flue system to a greater distance than that provided by the standard horizontal co–axial flue.

If either an additional 45˚ or 90˚ accessory elbow is used then the maximum permissible length of either pipe must be reduced by 0.5m or 1m respectively.

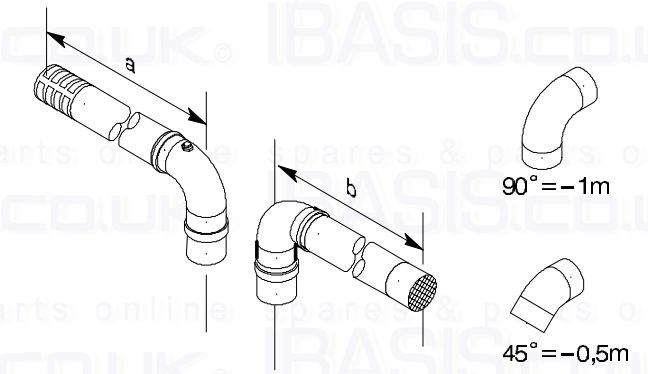

Fig. 6.7

INSTALLATION

The graph in Fig. 6.8 demonstrates the allowable lengths for the air supply and flue exhaust pipes.

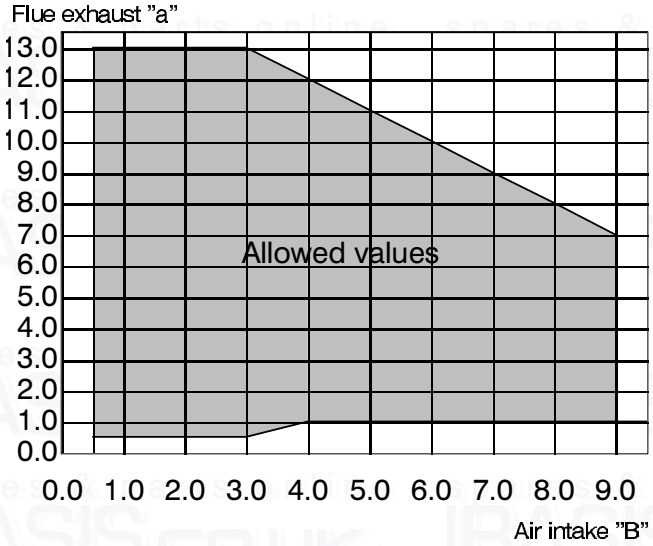

Fig. 6.8 – all dimensions in metres

Vertical – roof kit (Fig. 6.9)

This kit allows vertical termination of the flue pipe through the roof. The kit is 1.2m in length. Extension pieces (Co – axial) are also available which allows the flue system to be extended to a total overall maximum permissible length.

It should be noted that there are two versions of this kit, see Tab. 6.2.

For the version A **no bends are available.** Consequently you are recommended to plan the straight route of the flue prior to mounting the boiler.

For the version B, optional 45° and 90° elbows can be used to offset the flue route.

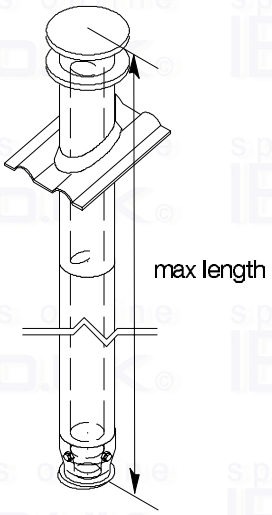

Fig. 6.9

	Version A	Version B
Diameter size (mm)	80/120	80/125
Max length	5	8,5
90° elbow	–	1*
45° elbow	–	0,5*
* equivalent length in meters for each bend		

Tab. 6.2

Vertical flue kit – condensation

When fitting the 80/125 vertical flue kits where the Equivalent Flue Length exceeds 3 m a condensate collector and syphon are required. The syphon must also be connected to a suitable drain.

Please, see the boiler accessory leaflet available from your Supplier for details or contact Biasi UK Technical Helpline.

6.9 Electrical connections

Connection to the electricity supply

1 Remove the front panel of the case (see the section 9.2 in this manual).
2 Remove the screws I and J (Fig. 6.10).
3 Loosen the screws *K.*
4 Remove the side panels or move the lower part of the side panels as indicated in Fig. 6.11 and pull the control panel.
When completely pulled out, the panel can rotate 45° downwards to facilitate the operations on the internal parts.

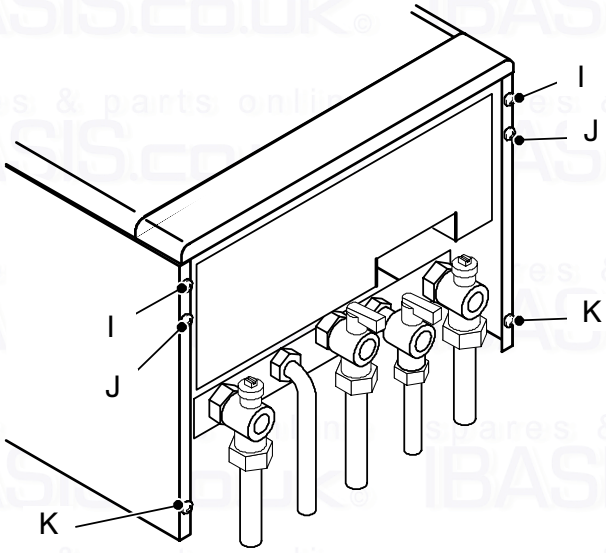

Fig. 6.10

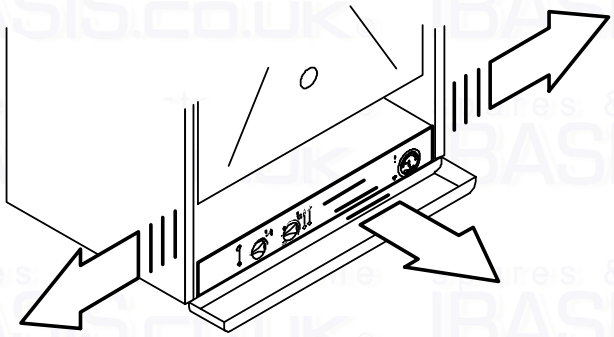

Fig. 6.11

5 Loosen the screws L and remove the service panel (Fig. 6.12).

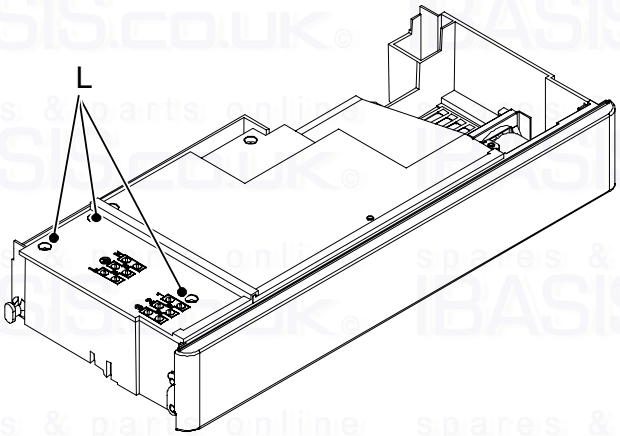

Fig. 6.12

For the electrical connection to the boiler use electric wires which conform to the current regulations, with flexible cord, each core having a cross section area **not less than 0,75 mm²**.

6 Connect the electrical supply flexible cord coming from the fused spur isolation switch to the power supply terminal block of the boiler (Fig. 6.13) keeping the same connections for the live (brown wire) and the neutral (blue wire). External 3 A fuse or fused plug with same current rating is recommended.
Do not connect live wires to terminals to which the room thermostat must be connected.

7 **Connect the earth wire (yellow/green).**

Connection of a room thermostat

The room thermostat must be connected to the terminal block situated next to the control panel.

When connecting any type of external control, the link M in Fig. 6.13 must be removed.

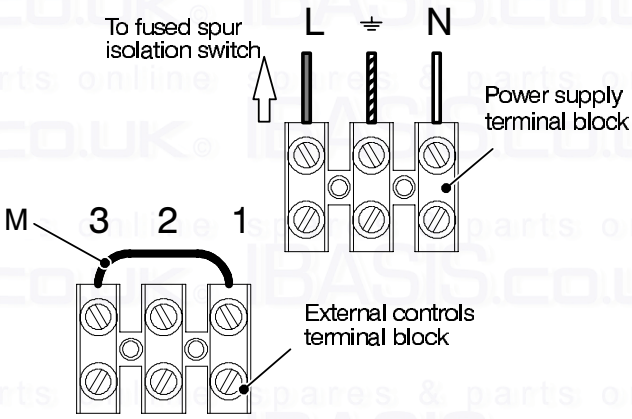

Fig. 6.13

8 Connect the room thermostat between terminals 1 and 3 as shown in Fig. 6.14.
Do not connect live wires to terminals to which the room thermostat must be connected.

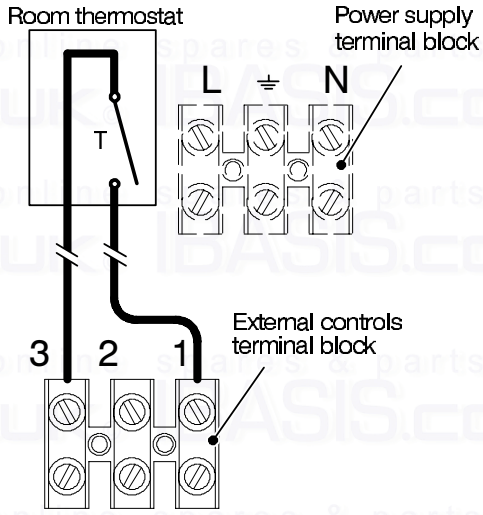

Fig. 6.14

9 Route the electrical supply flexible cord and the external control flexible cord as illustrated in Fig. 6.15.

INSTALLATION

Lock the flexible cords in place with the flexible cord clamps

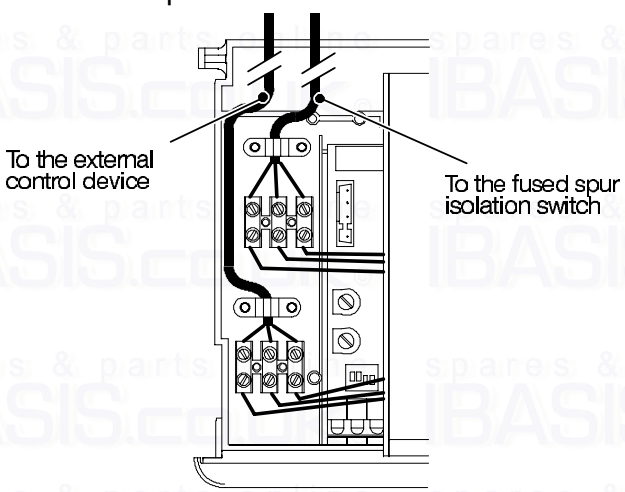

Fig. 6.15

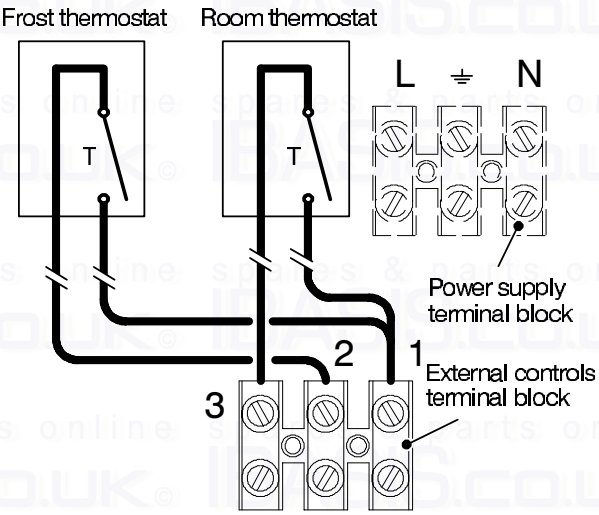

Fig. 6.16

6.10 External frost protection

10 Connect the frost thermostat between terminals 1 and 2 as shown in Fig. 6.16.
Do not connect live wires to terminals to which the room thermostat must be connected.

6.11 Connecting a M90.24SR or M90.28SR system boiler to a cylinder

Two schematic wiring diagrams are given in this section showing two possible ways to connect an external programmer to a mid–position diverter valve to provide independent timed and thermostatic control of heating and hot water.

In both diagrams the earth wires are not shown for clarity. Earth wiring **must** be fitted as necessary.

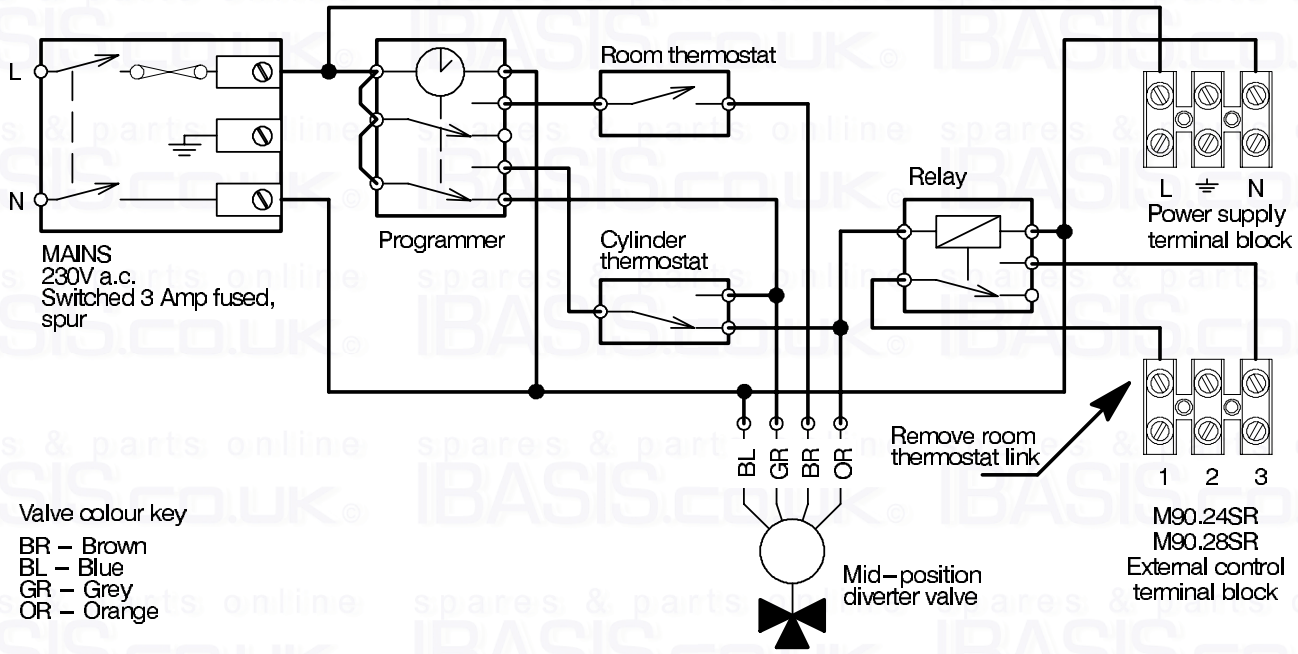

Fig. 6.17 – relay controlled boiler

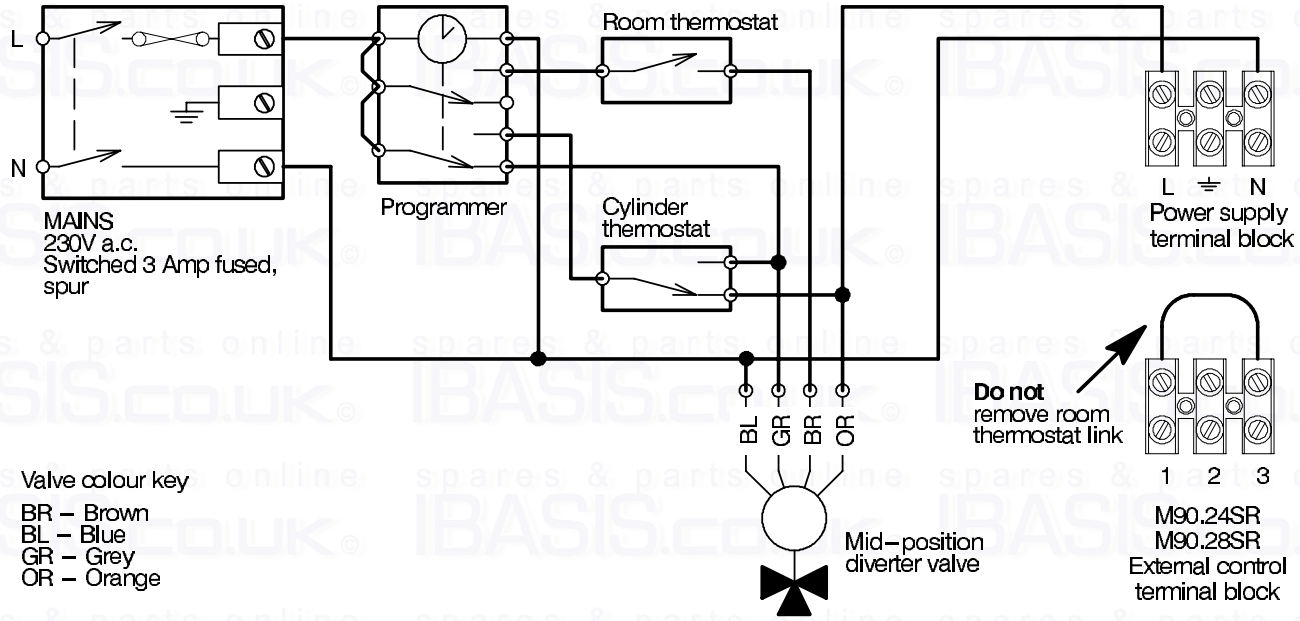

Fig. 6.18 – directly controlled boiler

INSTALLATION

7 COMMISSIONING

7.1 Electrical installation

Preliminary electrical system checks to ensure electrical safety shall be carried out by a competent person. i.e. polarity, earth continuity, resistance to earth and short circuit.

If a fault has occurred on the appliance the fault finding procedure should be followed as specified in the service manual.

INSTALLATION

7.2 Gas supply installation

1 Inspect the entire installation including the gas meter, test for soundness and purge, all as described in BS 6891;

2 Open the gas cock 13 (Fig. 7.1) on the appliance and check the gas connector on the appliance for leaks.

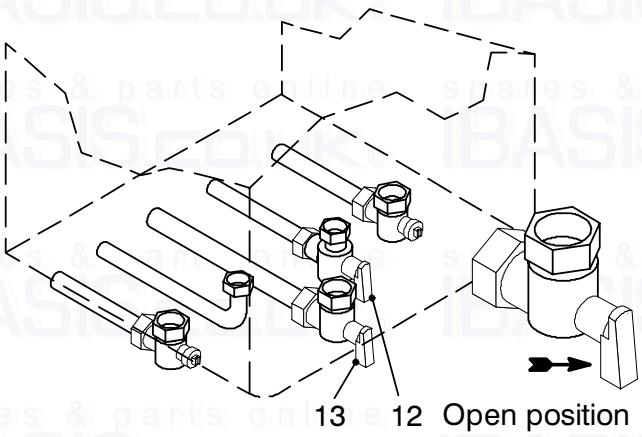

Fig. 7.1

7.3 Filling the d.h.w. system

1 Close all hot water draw–off taps.

2 Open the cold water inlet valve 12 (Fig. 7.1).

3 Slowly open each draw–off tap and close it only when clear water, free of bubbles, flows out.

7.4 Initial filling of the system

1 Open the c.h. flow and return valves.

2 Remove the front panel of the case (see the section 9.2 in this manual.

3 Unscrew the cap on the automatic air purgervalve 21 (Fig. 7.2) one full turn and leave open permanently.

4 Gradually open stopcock at the filling point connection to the c.h. system until water is heard to flow; do not open fully.

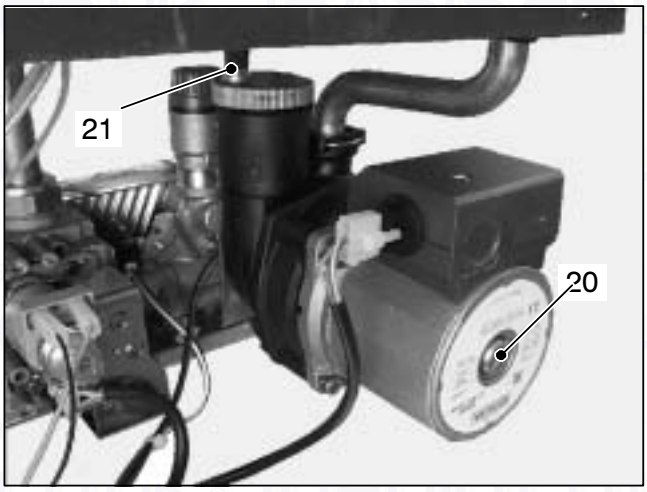

Fig. 7.2

5 Open each radiator air vent starting at the lowest point of the system and close it only when clear water, free of bubbles, flows out.

6 Purge the air from the pump by unscrewing the pump plug 20 (Fig. 7.2); release the pump shaft by turning in the direction indicated by the arrow on the information plate.

7 Replace the pump plug.

8 Continue filling the system. The actual reading should ideally be 1,3 bar and not less than 0,3 bar.

9 Close all air release valves on the c.h. system.

10 Inspect the boiler and the system for water soundness and remedy any leaks discovered.

11 Cold flush the system to remove any loose particles and any system debris before starting the boiler for the first time

The flushing procedure must be in line with BS7593 *Treatment of Water in d.h.w. c.h. Systems.*

When the installation and second filling are completed turn on the c.h. system and run it until the temperature has reached the boiler operating temperature. The system must then be immediately flushed through.

This procedure must be repeated twice more.

During this operation we highly recommend the use of a c.h. flushing detergent in the quantities as specified by the appropriate manufacturer, whose function it is to dissolve any foreign matter which may be in the system.

The above operation could save the invalidation of your boilers guarantee and will also prevent problems which you may experience in the future if an inhibitory is not used.

7.5 Lighting the boiler

Some products incorporate an anti cycling time delay. It is normal when first switching the boiler on for the boiler to operate on heating for a few seconds then switch off. After 3–4 minutes has elapsed the boiler will then re ignite and operate perfectly normally. The ignition delay cycle does not prevent normal operation of the boiler to provide d.h.w..

If external controls are fitted (e. g. Timeclock, room thermostat) ensure they "call for heat".

1 Turn on the electricity supply to the boiler, switching on the fused spur isolation switch. The appliance operation light 10 will flash every 4 seconds.

2 Turn the function selector 8 as in Fig. 7.3 (combi) or Fig. 7.4 (c.h. only). The appliance operation light 10 will flash every 2 seconds.

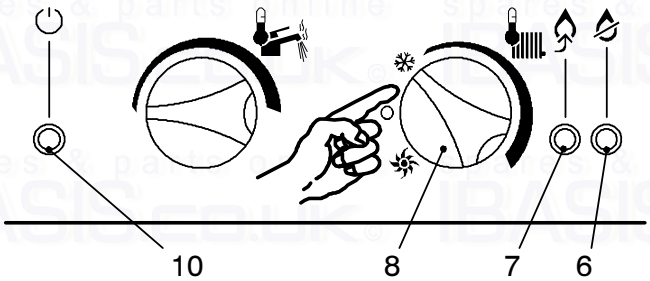

Fig. 7.3

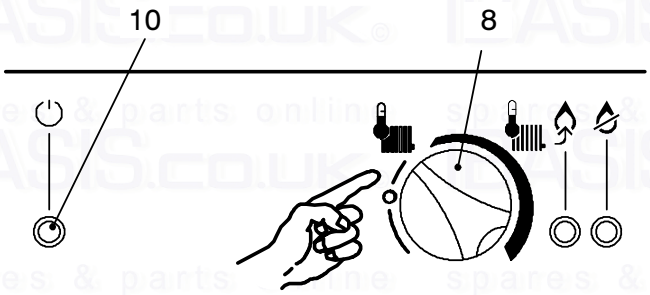

Fig. 7.4

The boiler will now go through an ignition sequence and the burner will light.

If during the ignition attempt period the boiler fails to light, the full sequence control p.c.b. will go to lockout and the lock–out signal lamp 6 will appear.

To reset the boiler press and release the boiler reset button 7 (Fig. 7.3).

7.6 Checking the gas pressure at the burner

This boiler has been tested to the highest quality control standards.

The maximum and minimum gas pressures are already set during this quality control process however the checking procedure must be followed to ensure maximum operating efficiency from the boiler.

1 Remove the front panel of the case (see section 9.2 in this manual).

2 Loosen the internal screw 37 (Fig. 7.5) on the Outlet Pressure Test Point of the Gas Valve and connect a pressure gauge using a suitable hose.

3 Set the d.h.w. and c.h. temperature control knobs to their maximum position.

4 Switch on the boiler and open at least one hot water tap fully.

5 Check the maximum gas pressure and compare the value on the gauge with the value indicated in the sections 4.6 or 4.7 (gas pressures at the burner), accordingly with the model of boiler installed.

6 Check the maximum gas flow at the gas meter and compare the value indicated in the sections 4.6 or 4.7 (gas rate), accordingly with the model of boiler installed.

7 Switch off the boiler.

8 Disconnect the gas modulator coil by removing the electrical connector A (Fig. 7.5).

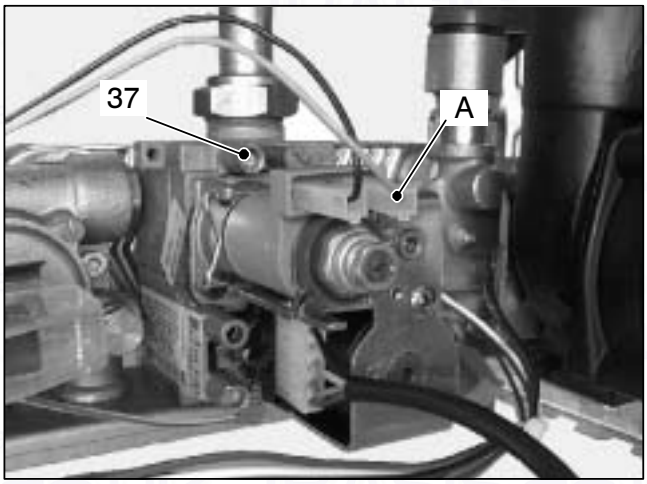

Fig. 7.5

9 Switch on the boiler.

10 Check the minimum gas pressure and compare the value on the gauge with the value indi-

INSTALLATION

cated in the sections 4.6 or 4.7 (gas pressures at the burner), accordingly with the model of boiler installed.

11 Switch off the boiler and re – connect the electrical connector A to the modulator coil.

12 Access the main control panel (see section 6.9, follow steps 2 – 5)

13 Switch on the boiler.

14 Check the ignition gas pressure by setting dip – switch ”3” (Fig. 7.8) to the OFF position. Compare the value on the gauge with the value indicated in the sections 4.6 or 4.7 (gas pressures at the burner), accordingly with the model of boiler installed.
If the ignition gas pressure is not set correctly see section 7.7 in this manual for the adjustment procedure. If ignition gas pressure is correct switch dip – switch ”3” to the ON position.

15 Switch off the boiler, turn off the hot water tap(s) and disconnect the pressure gauge.

If the maximum and minimum gas pressures measured above are not in accordance with the technical data (sections 4.6 or 4.7) then adjustment will be necessary. A full explanation of the gas pressure adjustment procedure is given in the Gas Valve section of the service manual. If maximum and/or minimum gas pressures are adjusted then the ignition gas pressure must be checked and adjusted if necessary.

Important: after the gas pressure checks and any adjustment operations, all of the test points and adjustment devices must be sealed.

7.7 Adjusting the burner ignition

1 Turn off the boiler by means of the fused spur isolation switch provided adjacent to the appliance.

2 Make sure that the function selector 8 is set to the position in Fig. 7.6 and that the timer selector switch and room thermostat, if fitted, is set to “demand heat”.

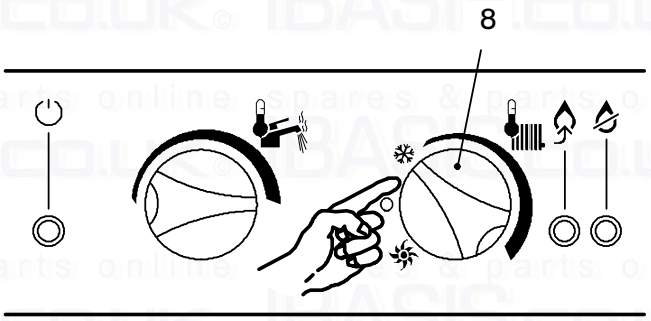

Fig. 7.6

3 Unscrew the gas valve’s outlet pressure test point 37 (Fig. 7.5) and connect a pressure gauge.

4 Loosen the screws B and remove the service panel (Fig. 7.7).

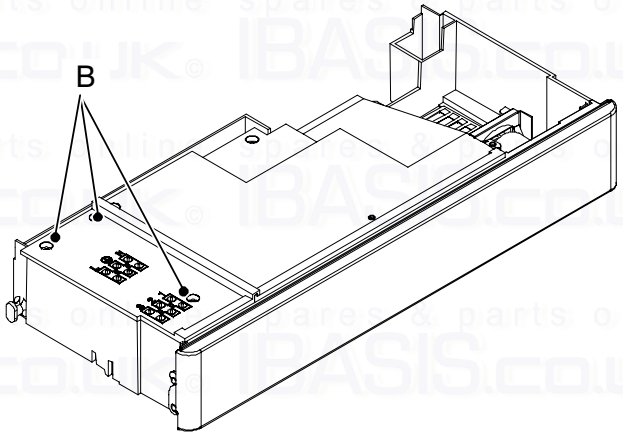

Fig. 7.7

5 Turn on the boiler.

6 Check that the boiler lights up uniformly and adjust the ignition gas pressure, if necessary.

To adjust the ignition gas pressure, set dip – switch ”3” (Fig. 7.8) to the OFF position and adjust potentiometer marked “ACC” with a screwdriver until correct ignition gas pressure is obtained.

INSTALLATION

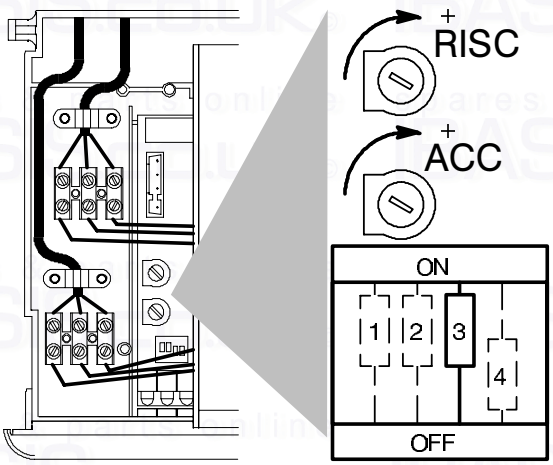

Fig. 7.8

Refer to the table *gas pressures at the burner* in the sections 4.6 or 4.7 for appropriate value.

7 Having finished this procedure, reset dip–switch ”3” to the ON position.

7.8 Adjustment of useful c.h. output

If the burner function selector (dipswitch number 4 on the main P.C.B.) is set to the ’ON’ position it will activate the re–ignition delay period of approximately 4 minutes. When dipswitch number 4 is set to the ’OFF’ position there will be approximately 30 seconds re–ignition delay period.

Whilst checking or adjusting the c.h. output, and fault finding on the boiler it may be necessary to switch the re–ignition delay mechanism (dipswitch 4) to the ’OFF’ position.

Refer to the diagrams shown in Fig. 7.9, Fig. 7.10 or Fig. 7.11 and select the correct central heating output gas pressure to meet with the central heating system requirements.

With the boiler operating in c.h. mode, use a suitable screwdriver to turn the adjustment potentiometer marked “RISC” (Fig. 7.8). Rotating the potentiometer anti–clockwise reduces the maximum supply current to the gas modulator device, and thus reduces the gas pressure to the burner.

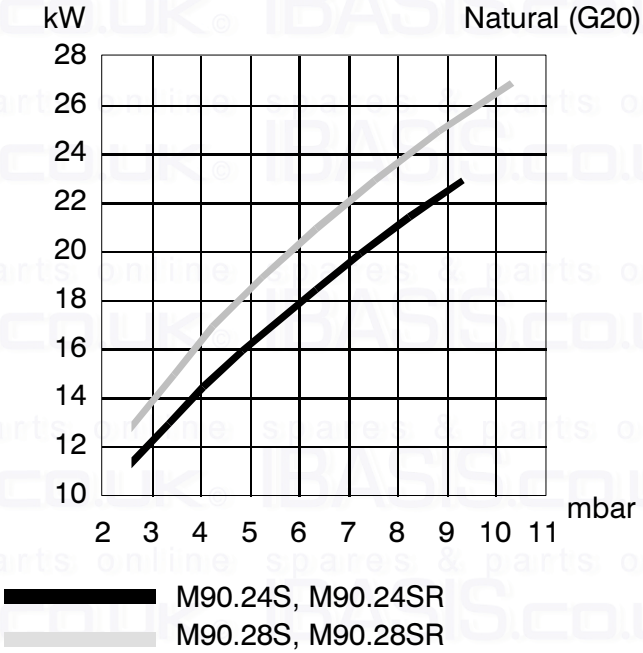

Fig. 7.9

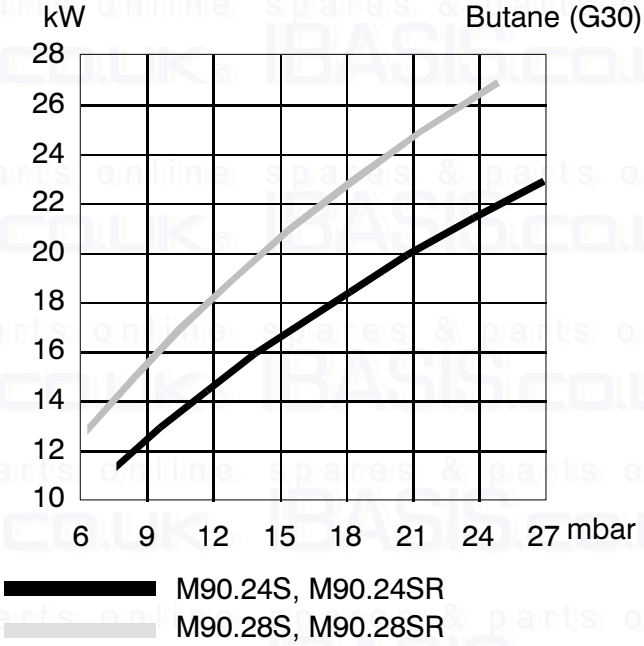

Fig. 7.10

INSTALLATION

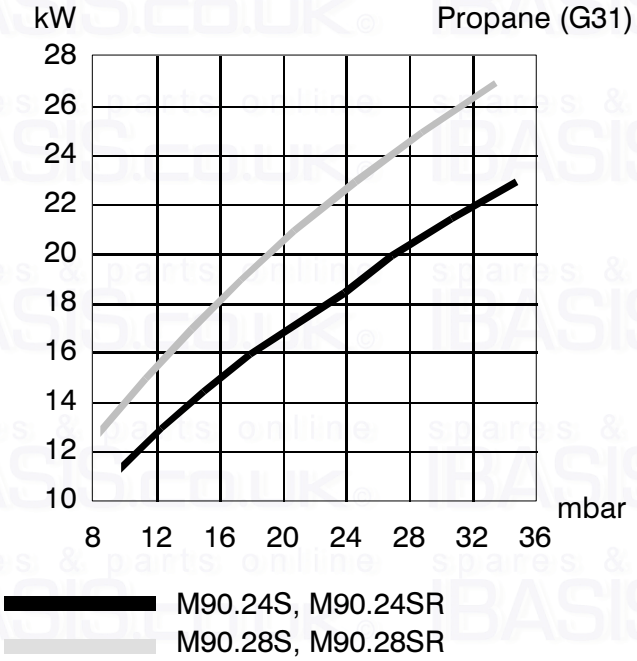

Fig. 7.11

7.9 Checking the ignition device

With the burner on high flame close the gas cock.

About 10 seconds after, the lock – out signal lamp 6 (Fig. 1.3 on page 1) must appear.

To reset the boiler press and release the boiler reset button 7 (Fig. 1.3 on page 1).

7.10 Checking the flue system

The flue system should be visually checked for soundness. Check all clamps, gaskets and fixings are secure and tight.

Ensure that the flue terminal is sited correctly in accordance with the flue fitting instructions and Fig. 5.1 on page 18 of this manual.

To carry out a combustion check refer to the instructions given in the section 9.5 of this manual.

Reference figures are given in the sections 4.6 or 4.7 of this manual (Flue gas figures).

7.11 Instructing the user

Hand over this combined User & Installation manual and the Service manual to the end user and explain how to use the unit in both c.h. and d.h.w. modes.

Take the User step by step through the lighting instructions.

Show the User how to switch off the appliance quickly and indicate the position of the electric supply isolator.

Explain the proper use and adjustment of all system controls; this will ensure the greatest possible fuel economy.

Explain the function and use of the function selector.

Explain and demonstrate the function of time and temperature controls (if fitted).

Explain how to turn off the appliance for both short and long periods and advise on the precautions necessary to prevent damage should the appliance be inoperative when freezing conditions may occur.

Fill in the details required on the Boiler Guarantee Certificate and hand to the User advising them to return the correct section for boiler Guarantee registration.

Finally, advise the User that, for continued safe and efficient operation, the appliance must be serviced by a competent person at least once a year.

8 GAS CONVERSION

8.1 Warnings

Procedures to adapt the boiler to the type of gas available **must be carried out** by a competent and responsible person.

Components used to adapt it to the type of gas available must be genuine parts only.

8.2 Procedures

1 Check that the gas cock (13 in fig. 9.3) fitted under the boiler is turned off and the appliance is is switched off at the mains isolating spur.

2 Remove the front and side panels of the case (see the section *General access and emptying hydraulic circuits* in the service manual).

3 Take off the lid of the sealed chamber.

4 Take the front panel of the combustion chamber off and remove the burner (29 on page 10). See section *Ignition and detection electrodes* in the service manual for detailed instructions.

5 Carry out the conversion for the type of gas, replacing the burner injectors correctly.

6 Re–assemble the burner, the front panel of the combustion chamber and the lid of the sealed chamber.

7 Extract the control panel as explained in the section 6.9 of this manual.

8 Loosen the screws C and remove the service panel (Fig. 8.1).

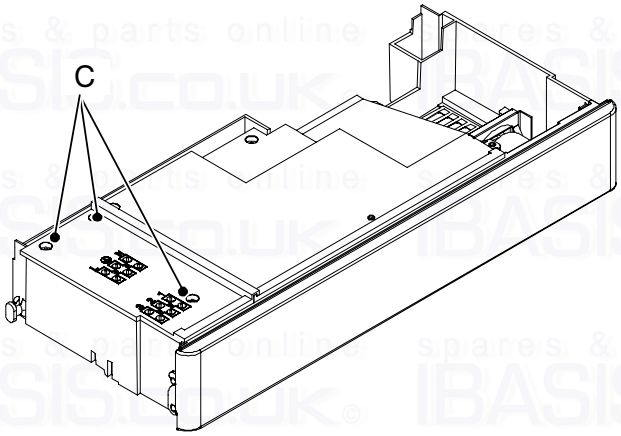

Fig. 8.1

9 set correctly the dip–switch ”2” to the correct position (Fig. 8.2) in accordance with the following table.

Gas supply	Position of dip–switch 2
Natural gas	On
L.P.G.	Off

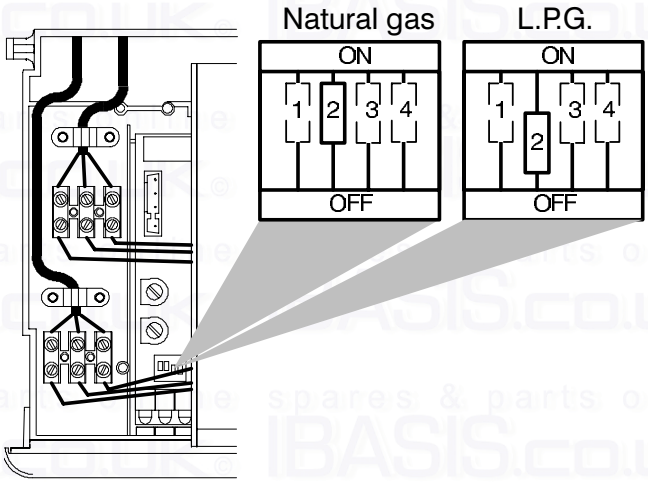

Fig. 8.2

10 Calibrate the gas valve according to the instructions given in the service manual, section *Modulating gas valve – Adjustment*.

11 Set the correct gas pressure for central heating output required, see section 7.8 in this manual.

12 Stick on the inside of the left hand side panel adjacent to the data badge the self–adhesive label (included with the conversion kit) indicating the type of gas, and the gas pressures to which the appliance has been set.

13 Replace the service panel, the front and side panels of the case.

MAINTENANCE

9 MAINTENANCE

9.1 Warnings

The procedures detailed in this chapter **must be carried out only by a professionally qualified person.** Thus you are advised to contact an Authorised Service Agent.

For efficient and continuous operation of the boiler you are advised to have, at least once a year, maintenance and cleaning done by an Approved Service engineer.

Isolate the appliance from the electricity supply by turning off the fused spur isolation switch adjacent to the appliance and **turn off the gas** cock, before carrying out any procedures, whatsoever, for cleaning, maintenance, opening or dismantling boiler panels.

9.2 Dismantling the external panels

Front panel

1 Loosen the two screws A (Fig. 9.1).

2 Lift and remove the panel.

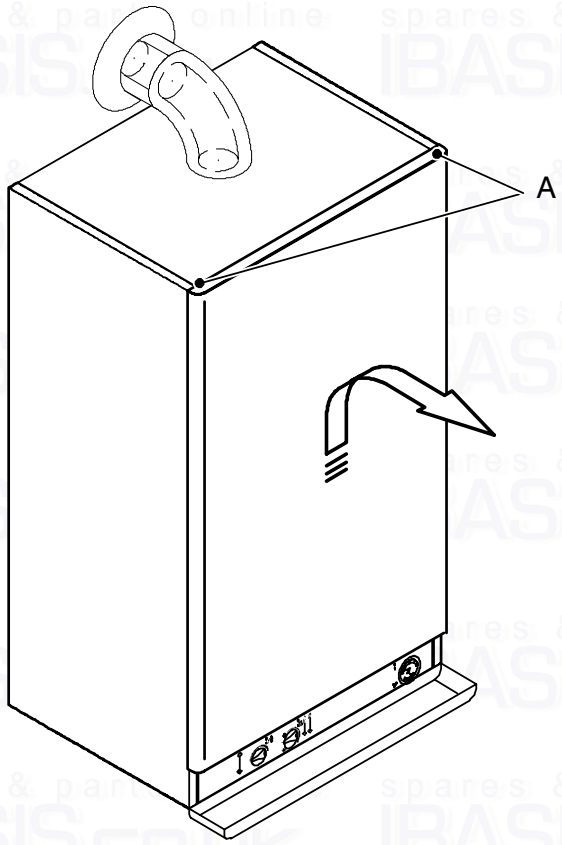

Fig. 9.1

Side panels

3 Loosen the screws B. Bring the bottom of the panels away from the boiler and lift them, freeing them from the top hooks (Fig. 9.2).

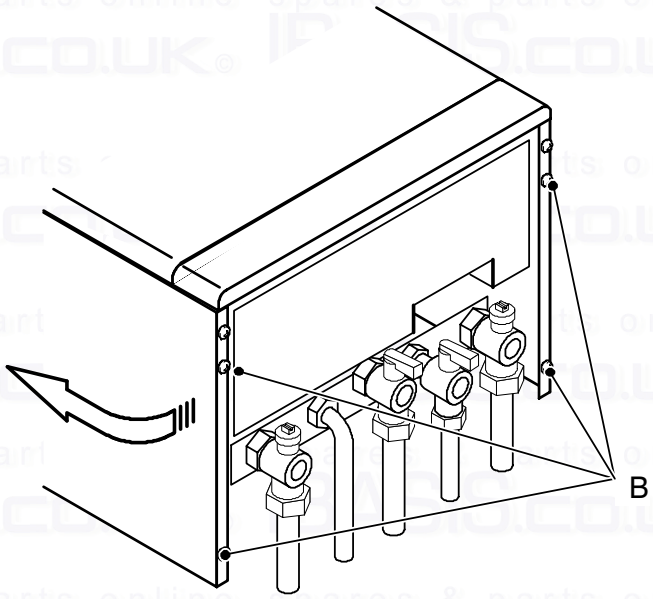

Fig. 9.2

9.3 Emptying the d.h.w. system (combi)

1 Turn off the d.c.w. inlet isolating valve (12 in Fig. 9.3) and turn on the hot water taps and any drain cocks.

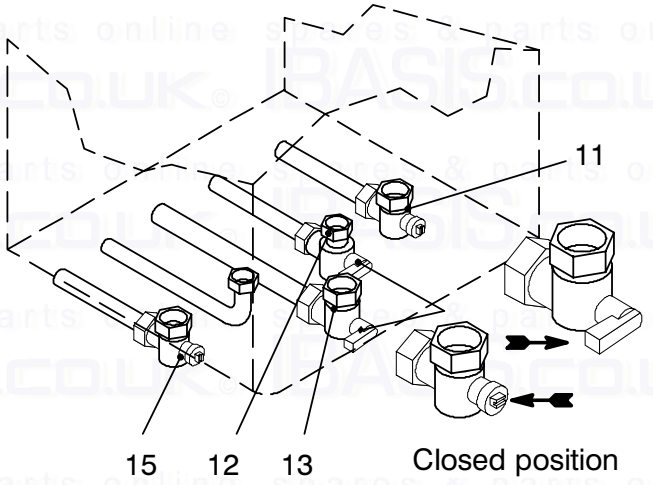

Fig. 9.3

9.4 Emptying the c.h. system

1 Close the c.h. isolating valves (11 and 15 in Fig. 9.3).

2 Open the central heating drain cock (17 in Fig. 9.4).

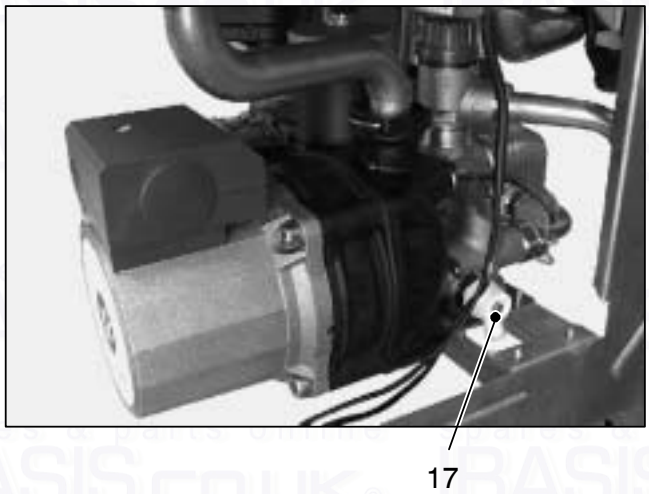

Fig. 9.4

3 A small quantity of water will remain in the d.h.w. heat exchanger after draining. If the boiler is being drained to prevent freezing, the d.h.w. heat exchanger must be removed and inverted to drain fully or an antifreeze solution added.

9.5 Combustion analysis check

To carry out a combustion analysis:

1 remove the front panel of the case (see the section 9.2 in this manual).

2 Remove the plugs indicated in Fig. 9.5.

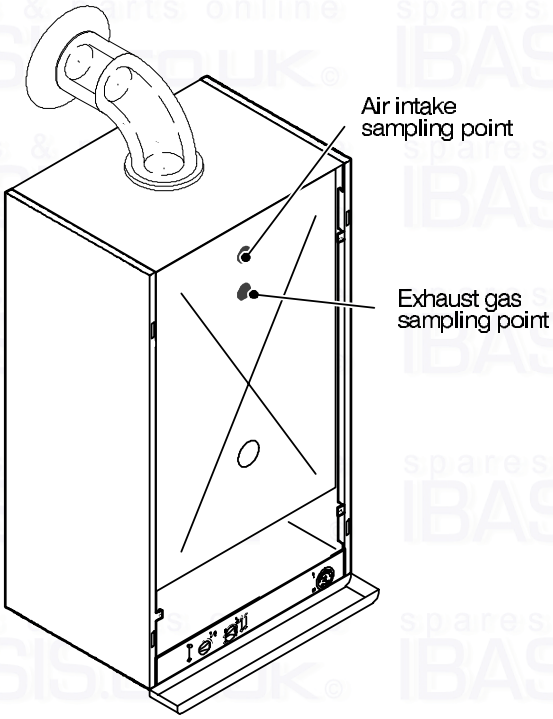

Fig. 9.5

3 For correct sampling insert the analyser probe aproximately 110 mm into the exhaust gas/air intake sampling points.

Reference figures are given in the sections 4.6 or 4.7 of this manual (Flue gas figures).

9.6 Cleaning the primary heat exchanger

1 Take off the front of the case.

2 Take off the removable front of the air–tight chamber and the front panel of the combustion chamber.

If you notice dirt on the fins of the primary heat exchanger (31 on page 10):

3 cover the sloping surfaces of the burner (29 on page 10) entirely in a protective layer (sheets of newspaper or similar).

4 Brush out the primary heat exchanger (31 on page 10) with a bristle paintbrush.

NOTE – When removing the airtight chamber cover it is not necessary to remove the screws located at the top edge on either side.

9.7 Checking the pressurisation in the expansion vessel

Empty the central heating system as described in section 9.4 of this chapter and check that the pressure in the expansion vessel is not less than 1 bar. See also section 4.5 page 13 of this manual.

If the pressure is lower, take steps to correct the pressure level.

9.8 Cleaning the burner

The sloping and multi–gas type burner (29 on page 10) does not need special maintenance, but it is sufficient to dust it with a bristle paintbrush.

To reach the burner:

1 Take off the front of the case.

2 Take off the removable front of the air–tight chamber and the front panel of the combustion chamber.

3 Brush out the burner with a bristle paintbrush.

NOTE – When removing the airtight chamber cover it is not necessary to remove the screws located at the top edge on either side.

9.9 Checking the flue

Have the integrity of the flue outlet pipe (45 on page 11) air intake pipe (46 on page 11), checked periodically, the venturi device* (42 on page 11) cleaned and the efficiency of the flue safety circuit checked at least once a year.

* For details see the section *Fan, venturi device and air pressure switch* in the service manual.

For all the above maintenance operations it is advisable to call an approved Service Engineer.

9.10 Visual inspection of appliance

Visually inspect all water joints, seals and connections for any evidence of leakage and retighten, grease or replace them as necessary.

9.11 Gas pressures and soundness

Check appliance for gas soundness. Recheck operational pressures and adjust as necessary as described in section 7.6 page 29 of this manual.

spares & parts online IBASIS.CO.UK

spares & parts online
IBASIS.co.uk©

17962.0841.2 –0202 11A4

BIASI U.K Ltd
Unit 31/33, Planetary Road
Industrial Estate, Neachells Lane
Willenhall, Wolverhampton WV13 3XB

spares & parts online IBASIS.CO.UK