Wall hung, fan flue, room sealed, high efficiency gas boiler

User manual and Installation instructions

RIVA ADVANCE HE

Models

M110.24SM/C
M110.32SM/C

energy saving recommended

BIASI

spares & parts online IBASIS.CO.UK

Congratulations on your choice.

RIVA ADVANCE HE are condensing high efficiency sealed chamber fan flue gas boilers. They are fully electronically controlled and have electronic ignition.

The materials they are made of and the control systems they are equipped with give you safety, a high level of comfort and energy savings to allow you to get the greatest benefit out of independent heating.

RIVA ADVANCE HE allow a higher efficiency by reducing the flue gas temperature such that the water vapour formed during the combustion is condensed out.
This allows a gain of useful heat that otherwise would be lost.

Remember that...

The manual

– must be read thoroughly, so that you will be able to use the boiler in a safe and sensible way;

– must be carefully kept. It may be necessary for reference in the future.

First lighting up must be carried out by competent and responsible engineer.

The manufacturer

– disclaim all liability for any translations of the present manual from which incorrect interpretation may occur

– cannot be held responsible for non–observance of instructions contained in this manual or for the consequences of any procedure not specifically described.

Using the boiler...

Before lighting the boiler you are advised to have a professionally qualified person check that the installation of the gas supply

– is gas–tight;

– is of the correct gauge for the flow to the boiler;

– is fitted with all the safety and control devices required by the current Regulations.

Ensure that

– the installer has connected the pressure relief valve outlet to a drain pipe. The manufacturers are not responsible for damage caused by opening of the pressure relief valve and consequent escape of water, if not connected correctly to the drain.

– the installer has connected the condensate outlet to a suitable drain pipe.

On detecting the smell of gas

– don't operate any electrical switches, the telephone or any device that may produce sparks;

– open the windows and doors at once to create a draught of air which will purge the area;

– shut off the gas cocks;

– get the assistance of a qualified person.

Do not touch the appliance with parts of the body that are wet or damp and/or bare feet.

Do not block or modify the condensate outlet and pipework

In case of structural work or maintenance near the exhaust duct and/or fume exhaust devices or their attachments, turn off the appliance. On completion of the work, have a professionally qualified person check their efficiency.

Repairs (under guarantee) must be carried out only by an approved engineer, using genuine spare parts. Thus do no more than switching off the boiler yourself (see the instructions).

Your boiler allows heating up of water to a temperature less than boiling point;
– must be connected to a central heating system and/or a hot water supply system, compatible with its performance and output;

– can be used only for those purposes for which it has been specially designed;
– must not be touched by children or by those unfamiliar with its operation;
– must not be exposed to weather conditions.

During the operation it is quite normal that the boiler produces a white plume of condensation vapour from the flue terminal. This is due to the high efficiency of the appliance and may be particularly evident with low outdoor temperatures.

Safe handling of substances

Biasi products are manufactured in accordance with ISO 9000 and do not, and will not, contain any hazardous materials or substances such as asbestos, mercury or C.F.C.'s.
The appliance packaging does not contain any substances, which may be considered a hazard to health.

Combustion chamber panels

Material: mineral fibres

Known hazards – Some people can suffer reddening and itching of the skin. Fibre entry into the eye will cause foreign body irritation, which can cause severe irritation to people wearing contact lenses. Irritation to respiratory tract.

Precautions – Dust goggles will protect eyes. People with a history of skin complaints may be particularly susceptible to irritation. High dust levels are only likely to arise following harsh abrasion. In general, normal handling and use will not present high risk, follow good hygiene practices, wash hands before, touching eyes, consuming food, drinking or using the toilet.

First aid – Medical attention must be sought following eye contact or prolonged reddening of the skin.

Thermostat / Temperature gauge

Description – Sealed phial and capillary containing liquid.

Known hazards – irritating to skin, eyes and throat. Vapour is harmful. Inflammable – do not extinguish with water.

Precautions – Do not incinerate. Avoid contact with broken/leaking phials. Do not purposely puncture.

First aid medical attention must be sought following eyes/skin contact, wash with clean water.

Appliance category I_{2H} Gas G20 20 mbar
Country of destination: United Kingdom (GB) Ireland (IE)

This appliance conforms with the EEC directive 90/396 and, consequently, it has the right to make use of the CE brand name

Moreover, the appliance conforms with the EEC directive 87/308 relative to the prevention and elimination of radio disturbances.

The appliance is built to comply with the regulation now in force regarding gas appliance's safety and the European regulation now in force relative to safety of household and similar electrical appliances.

The manufacturer, in the continuous process to improve his products, reserves the right to modify the data expressed in the present documentation at any time and without prior notice.

The present documentation is an informative support and it cannot be considered as a contract towards third parties.

Boiler installation and commissioning tips

The installation must be carried out by a qualified person who will be responsible for observing the current Regulations.

Installing the boiler...

Do not forget to remove the transit caps and plugs from the boiler connections these are fitted to every boiler.

Keep the boiler clear of dust during installation and in particular do not allow any dust or debris to enter the top of the boiler where the flue connection is made. It is recommended that you put a dust sheet over the top of the boiler until you are ready to make the flue connection.

Because every boiler is fired and tested live at the factory, a small amount of water remains within the boiler. It is possible for this water to initially cause the pump to seize. It is therefore recommended that the pump rotor be manually turned to free its rotation before turning the boiler on.

Remember to release the auto air purge before filling the boiler. See the instructions to identify the location of this device.

This boiler allows to control the flow temperature of the central heating system at very low levels.
In case of underfloor heating system a temperature limiting device (e.g. a safety thermostat) is recommended to stop the boiler in case that the water temperature exceeds the design temperature.

You are strongly advised to flush out the system both cold and hot in order to remove system and installation debris.

It is also sensible to initially fire and commission the boiler before connecting any external controls such as a room thermostat. By this method if you have a subsequent problem following the addition of an external control you can eliminate the boiler from your fault analysis.

If the boiler is fitted with a digital programmer, when setting the times for automatic operation, remember that for every "ON" time there must be an "OFF" time to follow and that on every occasion you enter a time you must also indicate which days that you want the boiler to follow the timed settings.

Some products incorporate an anti cycling time delay. It is normal when first switching the boiler on for the boiler to operate on heating for a few seconds then switch off. After 3 – 4 minutes has elapsed the boiler will then re ignite and operate perfectly normally. The ignition delay cycle does not prevent normal operation of the boiler to provide d.h.w.

If you are in any doubts as to the installation or operation of the boiler please read the instruction manuals thoroughly and then if necessary contact Biasi UK for advice and assistance.

Please remember that if you are in any doubt about the installation of this product you can contact our Technical Helpline on tel. 0121 506 1350

TABLE OF CONTENTS

USE

1 Appliance description 2
1.1 Overview 2
1.2 Control panel 2
1.3 Isolation valves 2
1.4 Technical data 2
1.5 Operation lights 3

2 Instructions for use 4
2.1 Warnings 4
2.2 Refilling procedure 4
2.3 Ignition 4
2.4 C.h. circuit temperature 5
2.5 D.h.w. temperature 6
2.6 Extinguishing 7
2.7 Built in time switch 7

3 Useful advice 10
3.1 Central heating 10
3.2 Frost protection 10
3.3 Periodic maintenance 10
3.4 External cleaning 10
3.5 Operational faults 10

INSTALLATION

4 Technical information 12
4.1 Overview 12
4.2 Main diagram 13
4.3 Technical data mod. M110.24SM/... 14
4.4 Technical data mod. M110.32SM/... 16
4.5 Hydraulic specifications 18
4.6 Expansion vessel 18

5 General requirements 19
5.1 Related documents 19
5.2 Location of appliance 19
5.3 Flue system 19
5.4 Gas supply 20
5.5 Air supply 20
5.6 Ventilation 20
5.7 Condensate drain 20
5.8 Water circulation (c.h.) 21
5.9 Domestic water 22
5.10 Water treatment 22
5.11 Electrical supply 22

6 Installation 23
6.1 Warnings 23
6.2 Precautions for installation 23
6.3 Installing the bracket 23
6.4 Overall dimensions 24
6.5 Joints 24
6.6 Mounting the boiler 24
6.7 Fitting the flue system 25
6.8 Choice of flue 25
6.9 Electrical connections 26
6.10 External frost protection 28
6.11 External temperature probe (optional) 28

7 Commissioning 30
7.1 Electrical installation 30
7.2 Gas supply installation 30
7.3 Filling the d.h.w. system 30
7.4 Initial filling of the system 30
7.5 Condensate pipe and traps 31
7.6 Lighting the boiler 31
7.7 Checking the gas supply pressure 32
7.8 Maximum output in c.h. mode 33
7.9 External temperature probe setting (optional) 33
7.10 Checking the ignition device 34
7.11 Checking the flue system 34
7.12 Checking the condensate drain pipe 34
7.13 Instructing the user 34

MAINTENANCE

8 Maintenance 35
8.1 Warnings 35
8.2 Dismantling the external panels . . . 35
8.3 Emptying the d.h.w. system 35
8.4 Emptying the c.h. system 35
8.5 Combustion analysis check 36
8.6 Cleaning the condensing heat exchanger and burner 36
8.7 Checking the pressurisation in the expansion vessel 37
8.8 Cleaning the burner 37
8.9 Checking the flue 37
8.10 Drain pipe inspection 37
8.11 Visual inspection of appliance 37
8.12 Gas pressures and soundness . . . 37
8.13 Water inhibitor concentration 37

Abbreviations used in the manual:
C.h. = Central heating
D.h.w. = Domestic hot water
D.c.w. = Domestic cold water

USE

1 Appliance description

1.1 Overview

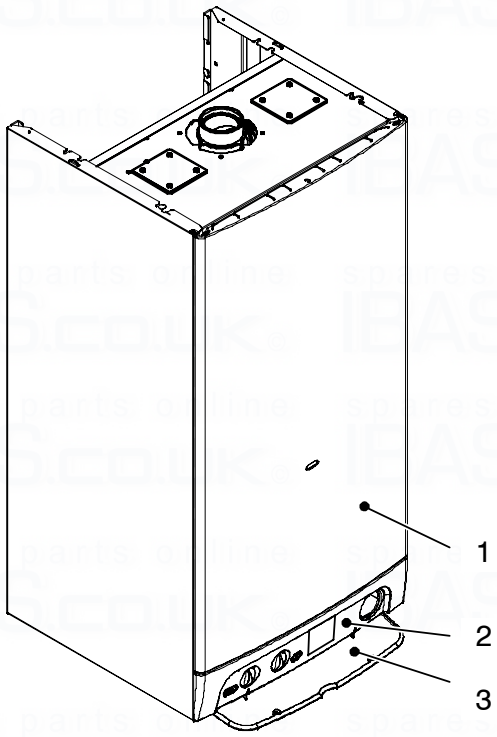

Fig. 1.1

1 Case front panel
2 Control panel
3 Control panel cover

1.2 Control panel

4 C.h. circuit temperature and pressure gauge
5 Time switch (c.h. control)
6 Lock–out signal lamp
7 Lockout reset button
8 Function selector and c.h. temp. control knob
9 D.h.w. temperature control knob
10 Appliance operation lights

1.3 Isolation valves

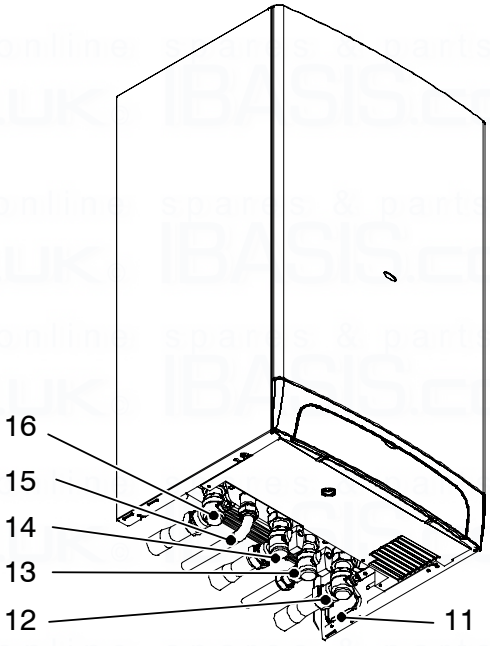

Fig. 1.2 (bottom view of the boiler)

11 Condensate drain pipe
12 C.h. return valve
13 D.c.w. inlet valve
14 Gas inlet valve
15 D.h.w. outlet pipe
16 C.h. flow valve

1.4 Technical data

For detailed technical data see section 4.3 or 4.4 of this manual.

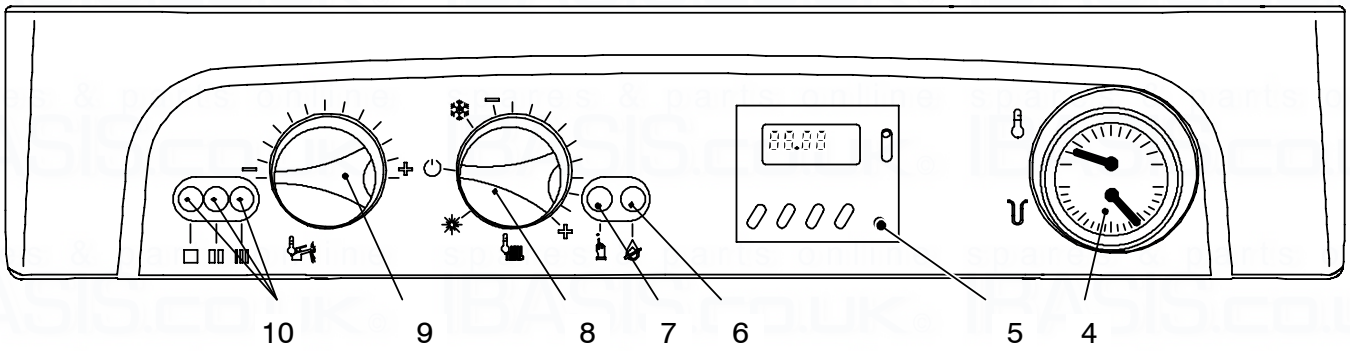

Fig. 1.3

1.5 Operation lights

Three lights (10 in Fig. 1.3) give detailed indication regarding the operation of the boiler.

The following table gives the relationship between each of the possible light combinations and their meaning during the normal operation of the boiler.

☐	▯▯	▯▯▯	
☼	○	○	A short pulse every 4 seconds: stand–by condition Function selector in ⏻ position. Anti–freeze system active
			1 second pulse every 2 seconds: normally operating boiler. Function selector in ❄ or ✷ position
☼	○	☼	C.h. operation
◐	○	◐	D.h.w. operation
☼	☼	○	Frost protect operation
○	○	☼	D.h.w. operation Excessive temperature on primary circuit

If the lights combination observed is not included in the above table a fault may be indicated. Reference should be made to the following table.

In this case switch off the boiler, as described in section 2.6 on page 7 and call a competent and responsible service engineer.

☐	▯▯	▯▯▯	
○	☼	☼	Faulty c.h. temperature probe NTC
○	☼	●	Faulty d.h.w temperature probe NTC
☼	●	○	Faulty primary circuit (no water or absence of flow)
☼	●	☼	Lack of burner ignition
●	☼	☼	Safety thermostat lock out
☼	●	●	Faulty fan control system
●	●	☼	Flue temperature probe NTC lock out
●	☼	○	Open flue temperature probe NTC
○	◐	◐	Faulty external temp. probe (if fitted)
☼	☼	☼	Flame detection error
○	☼	○	Other faults
○	○	○	Lack of power supply or faulty electronic control p.c.b.

Meaning of symbols

○ Lamp OFF

● Lamp ON

☼ Flashing lamp, alone or simultaneously with an other lamp.

◐ Flashing lamp, alternate with another lamp.

USE

USE

2 Instructions for use

2.1 Warnings

Biasi UK Ltd support the Benchmark initiative. The Benchmark Log Book is located at the back of this manual and should be completed by the Installing/Commissioning Engineer and handed over to the User for future reference by other visiting Engineers. Also included is the Service Interval Record card that should be completed by the Service Engineer following the annual service maintenance of the boiler and system.

All CORGI Registered Installers carry a CORGI ID card, and have a registration number. Both should be recorded in your Benchmark Log Book. You can check your installer is registered by calling CORGI direct on 01256 372300.

In order to guarantee safety and correct operation, it is essential that all the tests are carried out by a competent and responsible service engineer before lighting up the boiler.

The tests are described in the *installation instructions* in section 7 *commissioning.*

Ensure that the c.h. circuit is regularly filled with water (even if the boiler is only used for d.h.w. supply) checking that the pressure indicated on the temperature and pressure gauge 4 is not lower than that shown in Fig. 2.2.

If the pressure reading on the pressure gauge is below that shown in Fig. 2.2, then the system will require topping up. A filling loop is normally provided by the installer for this purpose.

If you are in any doubt regarding this procedure you are advised to contact your Installer or an Approved Engineer.

This appliance is provided with a built in anti–freeze system that operates the boiler when the temperature is below 5 °C
Therefore, when the boiler is not lit or used in cold weather, with consequent risk of freezing **do not switch off the boiler at the fused spur isolation switch or close the gas inlet cock**.

When you do not expect to use the boiler for a long period and the boiler is not to be used for frost protection then follow the instructions given in section 2.6 on page 7.

2.2 Refilling procedure

1 Isolate the boiler from the electrical supply at the fused spur. Reconnect the filling loop as demonstrated in Fig. 2.1.

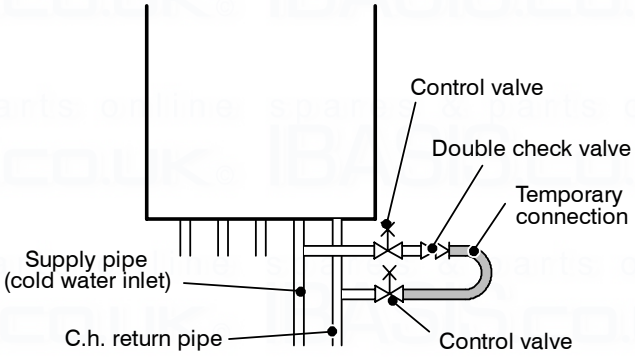

Fig. 2.1

2 Open the valves of the filling loop and watch the gauge until it reaches normal filling pressure as shown in Fig. 2.2.

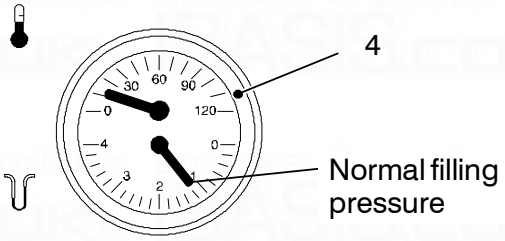

Fig. 2.2

3 Close the valves and remove the filling loop.

If you experience any difficulty with the operation of the boiler, switch off the boiler immediately at the fused spur isolation switch and contact your Installer or an approved Service Engineer

Air introduced into the boiler during this filling process will vent through the automatic air purger fitted to the boiler. You may also find it necessary to vent air from your radiator circuit using your radiator key, however be aware that excessive venting will cause the pressure in the system to drop.

Always ensure that the pressure gauge is set at the required pressure.

2.3 Ignition

1 Check that the valves located in the lower part of the boiler are open (Fig. 2.3).

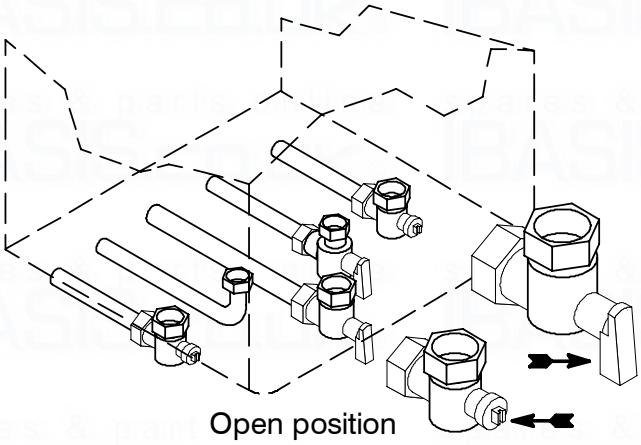

Fig. 2.3

2 Turn on the electricity supply to the boiler, switching on the fused spur isolation switch. The appliance operation light 10 (Fig. 2.4) will flash every 4 seconds (stand – by condition).

3 If the boiler is to be used for c.h. and d.h.w position the function selector 8 as in Fig. 2.4. The appliance operation light 10 will flash every 2 seconds (operating boiler).

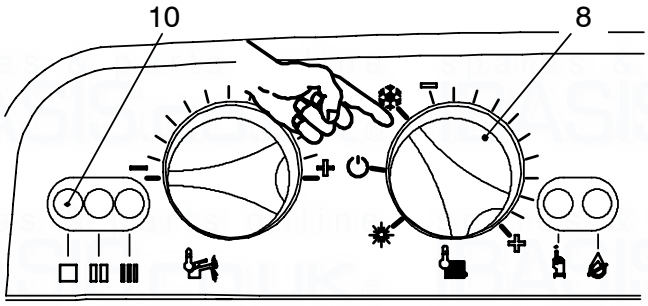

Fig. 2.4

4 If d.h.w. supply only is required, position the function selector 8 as in Fig. 2.5. The appliance operation light 10 will flash every 2 seconds (operating boiler).

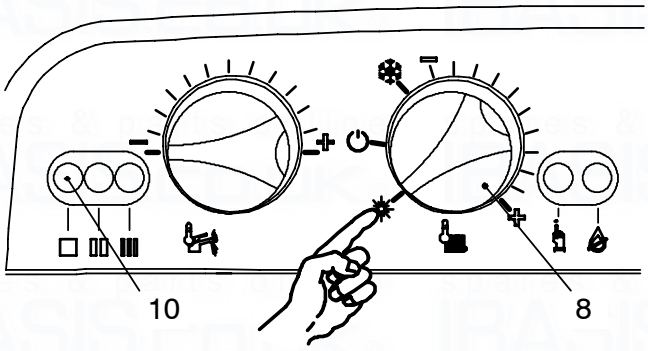

Fig. 2.5

2.4 C.h. circuit temperature

The output temperature of c.h. water is adjustable from a minimum of about 25°C to a maximum of about 85°C (Fig. 2.6), by turning the knob (8).

Adjustment of the boiler temperature alters the gas flow at the burner according to the thermal demand in the system. So it is usual to see the burner lit at the minimum level for more or less long periods.

It is possible to fit to this boiler an optional outside temperature sensor which helps to manage and control the boiler and system efficiency. The following instructions indicate how to set the output temperature of the c.h. water depending on whether the optional outside sensor has been fitted.

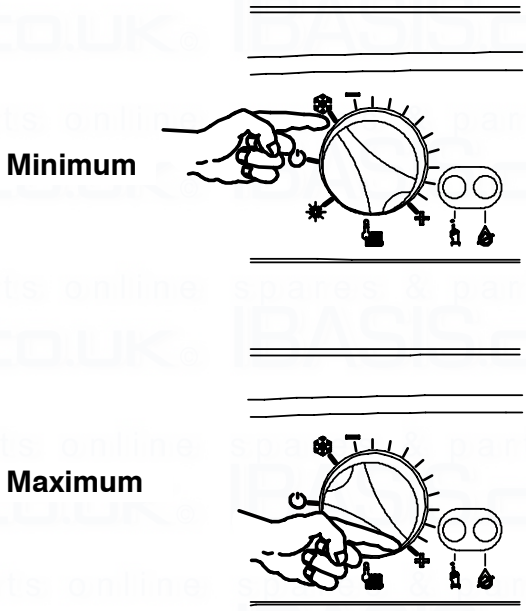

Fig. 2.6

Adjustment WITHOUT the external temperature probe (optional) fitted

In order to achieve optimal settings for economy and comfort, we recommend adjusting the operating temperature of the c.h. water according to the outside temperature, positioning the knob as follows:

USE

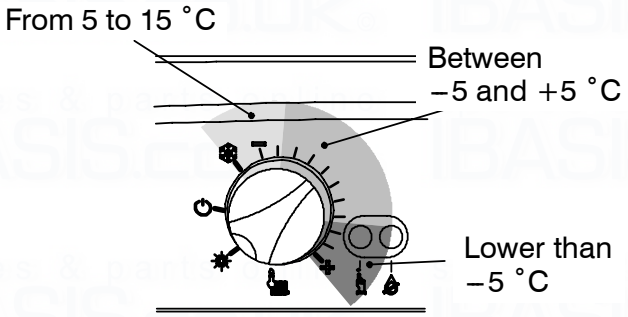

Fig. 2.7

Your qualified installer will be able to recommend the most suitable adjustment for your system.

The temperature and pressure gauge (4, Fig. 1.3 on page 2) will allow you to check that the set temperature is obtained.

Adjustment WITH the external temperature probe (optional)

When the boiler is connected to the external temperature probe (optional), the temperature of the c.h. flow is automatically adjusted with reference to the external temperature.

In this case the boiler must be properly set by the installer (as described in section 7.9 of this manual) and the c.h. flow temperature control knob must be positioned as illustrated in Fig. 2.8.

To satisfy temporary changes or different room temperatures, the c.h. water temperature can also be manually increased or decreased within a range of ±15 °C by turning the knob 8 (Fig. 2.8). More details are given in section 7.9 of this manual.

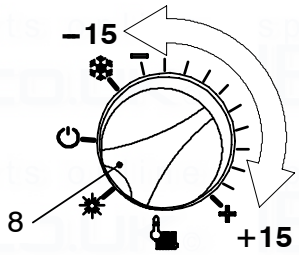

Fig. 2.8

2.5 D.h.w. temperature

The temperature of the d.h.w. leaving the boiler can be varied from a minimum of about 35°C to a maximum of about 55°C (Fig. 2.9), by turning the temperature control knob 9.

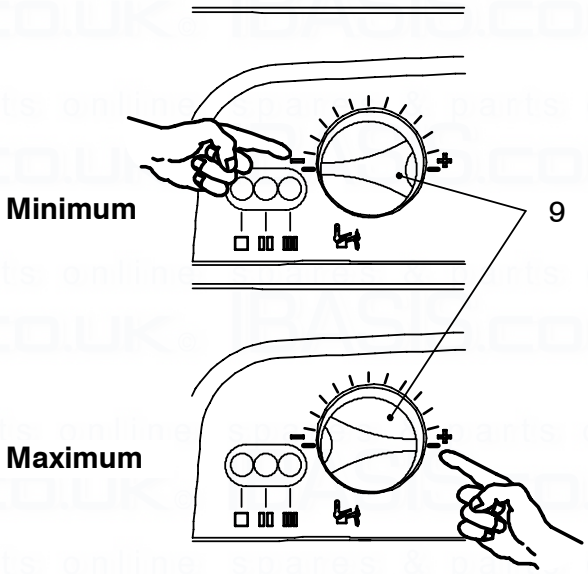

Fig. 2.9

Adjustment of the d.h.w. temperature is completely separate from that of the c.h. circuit.

The adjustment system integrated within the boiler automatically controls the flow of gas to the burner in order to keep the temperature of d.h.w. delivered constant, between the limits of maximum and minimum output.

Where the demand is at a low level or with the temperature set to the minimum, it is normal to see a cycle of lighting and extinguishing of the burner when running.

Adjustment

It is advisable to adjust the d.h.w. temperature to a level commensurate with the demand, minimising the need to mix with cold water. In this way, the automatic control facilities will be fully exploited.

Where lime scale is present in the water supply (hard water areas) it is also advisable not to exceed the setting position of the d.h.w. temperature control knob (9) as indicated in Fig. 2.10. This will help to minimise the incidences of scale deposits clogging the domestic hot water heat exchanger of the boiler.

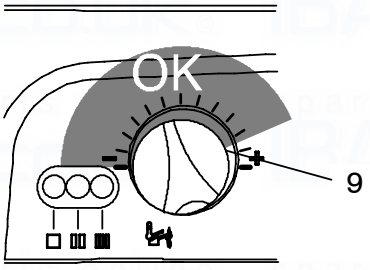

Fig. 2.10

In these cases, however, it is advisable to install a small water treatment device or softener. With such a device you should avoid periodic descaling.

Consequently, the d.h.w. heat exchanger will keep its performance consistent for a longer period of time with resulting gas savings.

If the demand for d.h.w. is so great as to prevent reaching a high enough temperature, have the appropriate output limiting valve installed by your installer or an Authorised Service Engineer.

2.6 Extinguishing

To turn the boiler off set the function selector 8 to the position shown in Fig. 2.11.
The appliance operation light 10 will flash every 4 seconds.

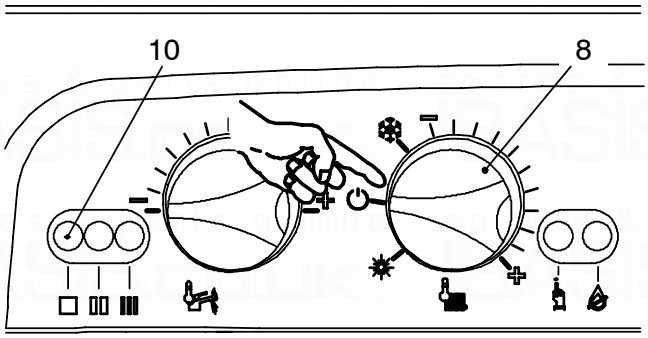

Fig. 2.11

When you do not expect to use the boiler for a long period:

1 Switch off the electricity supply to the boiler, by means of the fused spur isolation switch;
2 Shut off the gas supply cock 14 and the valves for the water circuits fitted under the boiler (Fig. 2.12).
3 Empty the water circuits, if necessary, as shown in the *installation instructions* in the section *maintenance*.

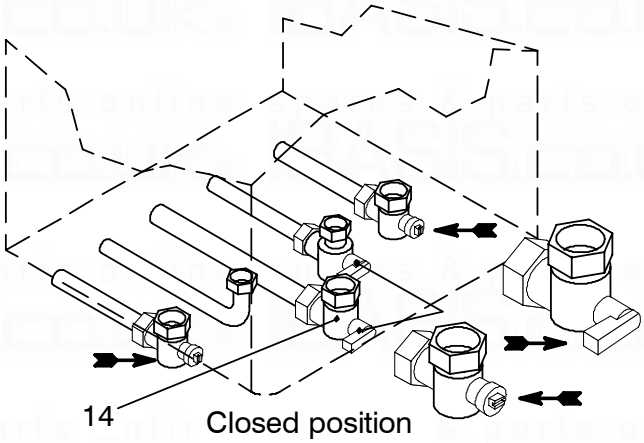

Fig. 2.12

2.7 Built in time switch

The combi boilers are equipped with a built in electronic time switch (5, Fig. 1.3 on page 2) which controls the c.h. operation.

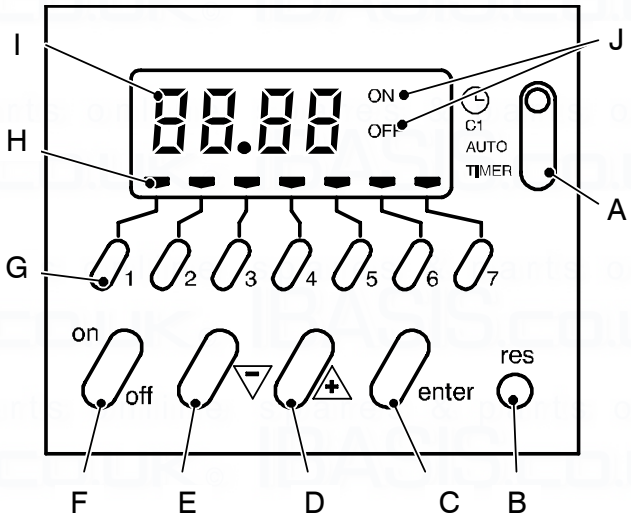

Fig. 2.13

Display and control panel

A Mode selector switch
B Reset button
C Enter button
D Increase "+" setting button
E Decrease "–" setting button
F On–off button
G Day selection buttons

USE

H Day display

I Time display

J ON – OFF display

Setting the current time and weekday

Note: with a new unit or when the reset button B has been pressed, the first day indicator H on the left and the time display I are flashing.

Set the mode selector switch A to the ⏲ position and press the buttons D or E until the current time appears in the display I.
Press the day selection button corresponding to the current day, considering that button 1=Monday, button 2=Tuesday and so on.

The clock starts by moving the switch A to the AUTO position.

Setting example shown in Fig. 2.14:
Current time 16.30, day Thursday.

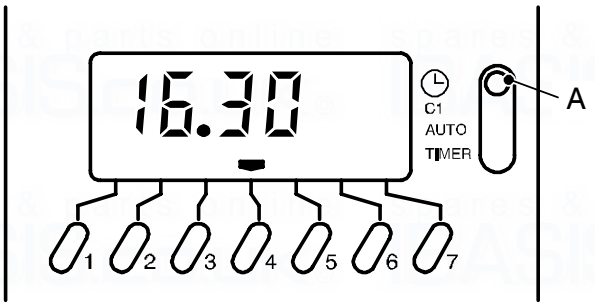

Fig. 2.14

Setting the switching time and day (or days)

20 memory locations are available, corresponding to 10 on – off sequences.

Set the mode selector switch A to the **C1** position. The symbols shown in Fig. 2.15 appears in the display.

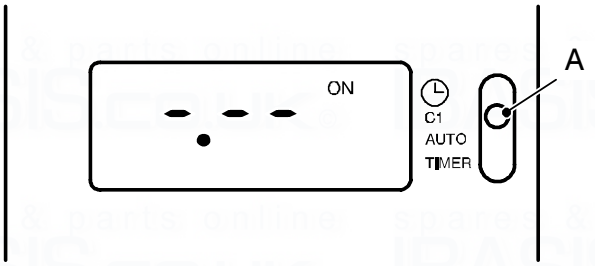

Fig. 2.15

Press the buttons D or E to set the desired ON time.

Press the buttons G to set the desired day or days of operation.

Press the "enter" button C to confirm the setting and to continue programming the OFF time.

Set the OFF time as explained above for the ON setting and confirm by pressing the "enter" button C. Proceed in the same way for other settings.

Setting example shown in Fig. 2.16:
A – ON time 7.45, day Monday to Friday.
B – OFF time 10.30, day Monday to Friday.

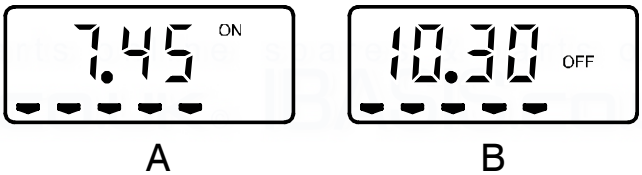

Fig. 2.16

Activating the timed settings

Set the mode selector switch A to the **AUTO** position shown in Fig. 2.17.

The current time and day appears in the display. The ON – OFF display J indicates the current state of operation (according to the settings).

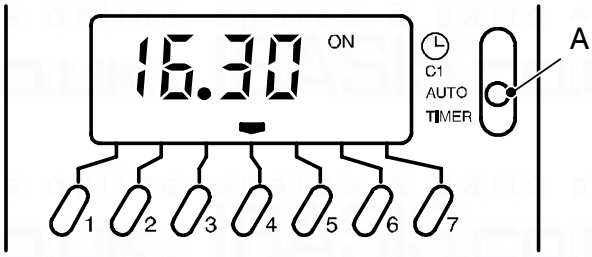

Fig. 2.17

Note: when the mode selector switch A is in the **AUTO** position and the boiler is switched off at the fused spur isolation switch, the display J indicates only the OFF state. The other indications are blanked.

Reading the timed settings

Set the mode selector switch A to the **C1** position. The symbols shown in Fig. 2.15 appears in the display.

Press the "enter" button C. Each time the button is pressed the display shows the details of the next setting.

The day display H gives a flashing indication of the active day or group of days.

Changing or deleting the timed settings

Set the mode selector switch A to the **C1** position. The symbols shown in Fig. 2.15 appears in the display.

Press the "enter" button C until the display shows the setting to be modified or deleted.

The day display H gives a flashing indication of the active day or group of days.

Press the button (or the buttons) G corresponding to the day (or days) for which it is intended to apply the modification. The corresponding day display stops flashing and a new switching time can be set or deleted.

The time setting can be modified now by pressing button D or E and the operation can be switched on or off by pressing the button F.

To delete a time set press the button D or E until the symbols shown in Fig. 2.15 appears in the time display I.

The new settings are memorised by moving the switch A to a different position.

Manual operation

The operation of the time switch can be forced on or off constantly or for a timed period.

To force **constantly** on or off the timer operation set the mode selector switch A to the **TIMER** position. The symbols shown in Fig. 2.18 appears on the display.

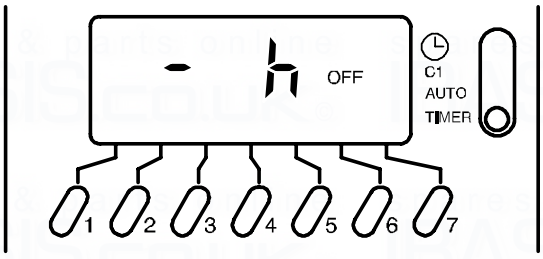

Fig. 2.18

The operation can be switched permanently on or off by pressing the button F and leaving the switch A in the **TIMER** position.

To force **a timed delay** on or off operation, set the mode selector switch A in the **TIMER** position.

Set the time delay by pressing the button D or E and the operation can be forced on or off by pressing the button F.

The time delay can be set within the following ranges:

1 to 23 hours with steps of 1 hour
1 to 27 days with steps of 1 day

The time delay setting is activated by moving the switch A to the **AUTO** position.
The ON – OFF display J flashes indicating that the current state of operation has been forced.

To delete the timed delay setting, set the mode selector switch A in the **TIMER** position, press the button D or E until the symbols shown in Fig. 2.18 appears in the display and then set the mode selector switch A to the **AUTO** position

Setting example shown in Fig. 2.19:
forced ON state for 4 hours.

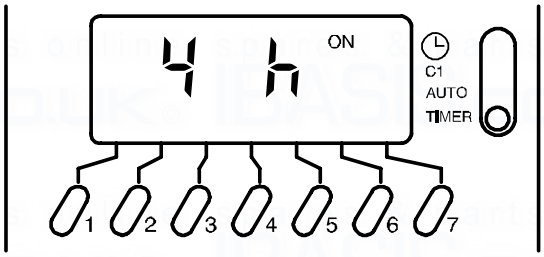

Fig. 2.19

Resetting

To completely reset the timer, press the reset button with a pointed object (pencil).

CAUTION: pushing the reset button will completely erase the settings as well as all the data, including the current time and day.

USE

3 Useful advice

3.1 Central heating

For reasonably economical service install a room thermostat.

Never shut off the radiator in the area where the room thermostat is installed.

If a radiator (or a convector) does not heat up, check that no air is present in it and that its valve is open.

If the ambient temperature is too high, do not alter the radiator valves. Reduce the central heating temperature instead by means of the room thermostat and the function selector (8 in Fig. 3.1).

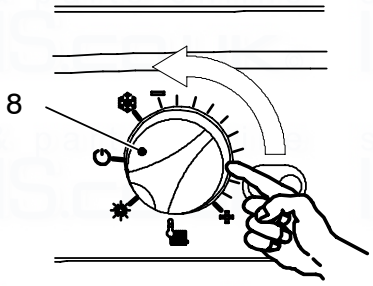

Fig. 3.1

3.2 Frost protection

This appliance is provided with a built in anti–freeze system that operates the boiler when the temperature is below 5 °C
Therefore, when the boiler is not lit and used in cold weather, with consequent risk of freezing **do not switch off the boiler at the fused spur isolation switch or close the gas inlet cock**.

3.3 Periodic maintenance

For efficient and continuous operation of the boiler, it is advisable to arrange maintenance and cleaning by an Authorised Service Centre Engineer, at least once a year.

During the service, the most important components of the boiler will be inspected and cleaned. This service can be part of a maintenance contract.

In particular, you are advised to have the following checks carried out:

- domestic hot water heat exchanger;
- condensing heat exchanger
- burner;
- exhaust fume duct and flue;
- pressurisation of the expansion tank;
- filling up of the central heating circuit;
- bleeding of air from the central heating system;
- general check of the appliance's operation.

3.4 External cleaning

Before carrying out any cleaning, disconnect the appliance from the electrical mains, using the fused spur isolation switch fitted adjacent to the appliance.

To clean the external panels, use a cloth soaked in soapy water. Do not use solvents, abrasive powders or sponges.

Do not carry out cleaning of the appliance and/or its parts with readily flammable substances (for example petrol, alcohols, naphtha, etc.).

3.5 Operational faults

If the lock–out signal lamp (6 in Fig. 3.2) comes on

this indicates that the safety lock–out has stopped the boiler.

To re–start the boiler, it is necessary to press the boiler reset button 7 (Fig. 3.2).

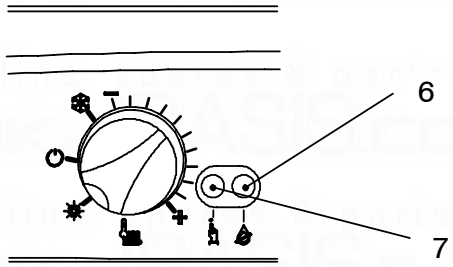

Fig. 3.2

For the first lighting up and following maintenance procedures for the gas supply, it may be necessary to repeat the resetting operation several times so as to remove the air present in the pipework.

After five consecutive resetting attempts the reset button is inhibited. To restore its function it is necessary to switch the boiler off and on from the electrical mains, using the fused spur isolation switch fitted adjacent to the appliance.

Safety lock–out may occur even in case of an blockage of the condensate drainage (e.g. plugged drain pipe).

It is advisable to check the condensate drainage pipe and traps for cleanness.

In this case and in case of persistent lock–out call a competent and responsible service engineer.

If noises due to air bubbles are heard during operation...

you should check that the pressure on the temperature and pressure gauge (Fig. 2.2 on page 4) is not below the correct setting.
If required, top up the system correctly, as described in the section 2.2 of this manual.
Bleed any air present in the radiators, if necessary.

If the pressure on the temperature and pressure gauge (4 on page 2) has gone down...

it is necessary to top up the appliance with water again, so as to raise the pressure to an adequate level as described in the section 2.2 of this manual.

If topping up with water has to be done very frequently, have the system checked for leaks.

If water comes out of the pressure relief valve

Check on the temperature and pressure gauge (4 on page 2) that the pressure in the central heating circuit is not close to 3 bars. In this case, temperature rise in the circuit can cause the pressure relief valve to open.

So that this does not happen and to decrease the pressure to a normal value, it is advisable to vent some of the water in the appliance through the bleed valves present in the radiators.

If in time, a reduction in domestic hot water supply is observed...

The likely causes may be impurities caught in the domestic hot water flow switch filter or limescale deposited in the domestic hot water heat exchanger. It is advisable to have the appliance cleaned out by an Authorised Service Centre Engineer.

If water should occasionally leak from the boiler...

shut off the valves positioned under the boiler (Fig. 2.12 on page 7) and call an Authorised Service Centre Engineer.

In this case or in case of problems other than those mentioned here, switch off the boiler, as described in section 2.6 on page 7 and call a competent and responsible service engineer.

4 Technical information

4.1 Overview

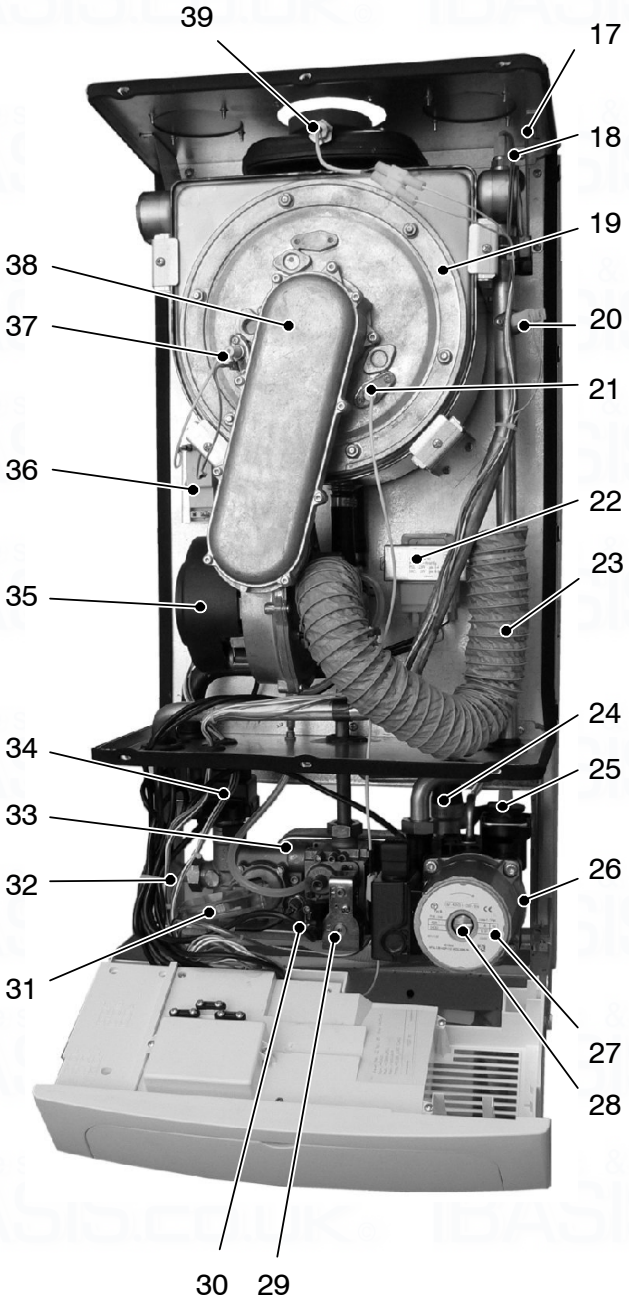

Fig. 4.1

11 Condensate drain pipe
12 C.h. return valve
13 Domestic cold water inlet valve
14 Gas inlet valve
15 D.h.w. outlet pipe
16 C.h. flow valve
17 Condensing heat exchanger air purger valve
18 C.h. temperature probe NTC
19 Condensing heat exchanger
20 Safety thermostat
21 Flame–detecting electrode
22 Transformer
23 Air hose
24 C.h. pressure relief valve
25 Automatic air purger valve
26 Main circuit drain valve
27 Pump
28 Pump vent plug
29 Gas valve
30 D.h.w. temperature probe NTC
31 Primary circuit flow switch
32 Condensate trap
33 D.h.w. heat exchanger
34 Three–way diverter valve
35 Fan
36 Spark generator
37 Ignition electrodes
38 Burner
39 Flue temperature probe NTC
40 D.h.w. flow switch
41 Gas valve inlet pressure test point
42 Gas valve outlet pressure test point
43 C.h. expansion tank
44 By–pass valve
45 Domestic water circuit filter
46 D.h.w. flow limiter
47 Flue outlet pipe
48 Air intake pipe
49 Flue exhaust sampling point
50 Air sampling point

4.2 Main diagram

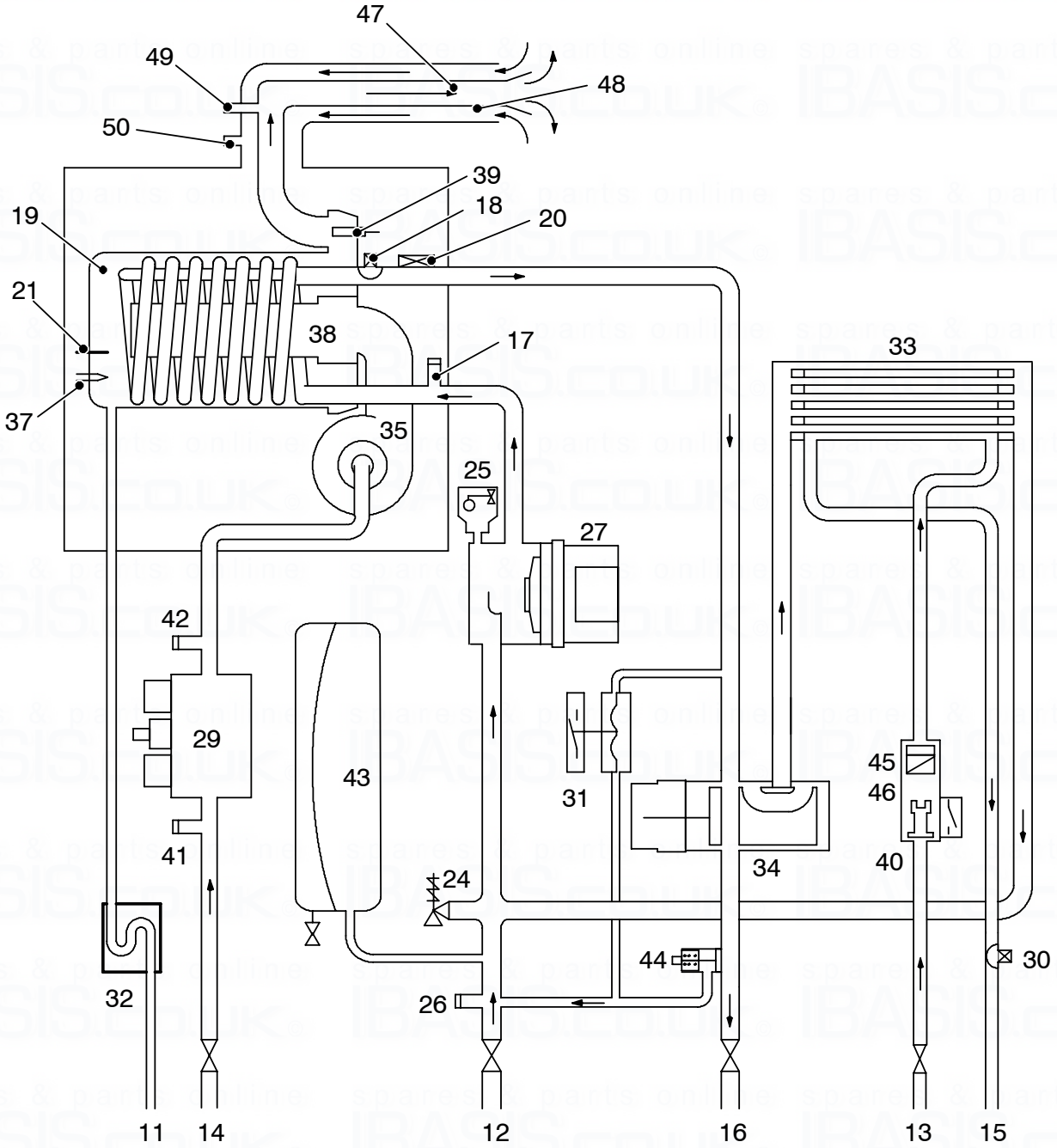

Fig. 4.2

INSTALLATION

4.3 Technical data mod. M110.24SM/...

Heat input			
Nominal	net (A)	kW	25,0
		BTU/h	*85 295*
	gross (B)	kW	27,8
		BTU/h	*94 848*
Minimum	net (A)	kW	6,0
		BTU/h	*20 470*
	gross (B)	kW	6,6
		BTU/h	*22 518*

Useful output		
Maximum	kW	24,4
	BTU/h	*83 248*
Minimum	kW	5,8
	BTU/h	*19 788*
Maximum condensing	kW	26,3
	BTU/h	*89 730*
Minimum condensing	kW	6,3
	BTU/h	*21 494*

Central heating		
Maximum flow temp.	°C	85
Minimum flow temp.	°C	25
Maximum pressure	kPa	250
	bar	*2,5*
Minimum pressure	kPa	30
	bar	*0,3*
Available head (in 1000 l/h)	kPa	23
	bar	*0,23*
Seasonal efficiency (C)	band	A
	%	90,0

Domestic hot water		
Maximum temperature	°C	60
Minimum temperature	°C	35
Maximum pressure	kPa	1 000
	bar	*10*
Minimum pressure	kPa	30
	bar	*0,3*
Flow rate		
minimum	l/min	2,5
30° rise (D)	l/min	12,4
35° rise (D)	l/min	10,4
40° rise (D)	l/min	9,1

Gas supply pressure G20		
Norm.	Pa	2 000
	mbar	*20*
Max	Pa	2 500
	mbar	*25*
Min.	Pa	1 700
	mbar	*17*
1 mbar approximately equals 10 mm H_2O		

Gas rate		
Max.	m^3/h	2,65
Min.	m^3/h	0,63

Restrictors references	
Gas	5,40
Air	Fuchsia

(A) referred to the net calorific value at 15 °C and 1013,25 mbar: G 20 = 34,02 MJ/m^3

(B) referred to the gross calorific value at 15 °C and 1013,25 mbar: G 20 = 37,78 MJ/m^3

(C) The value is used in the UK Government's Standard Assessment Procedure (SAP) for energy rating of dwellings. The test data from which it has been calculated have been certified by a notified body.

(D) Values subject to tolerance

Electrical Data		
Voltage	V~	230
Frequency	Hz	50
Power consumption	W	108
Protection degree		IPX4D
External fuse rating	A	3
Internal fuse rating	A	3,15 AF

Flue design		
Flue pipe diameter		
Coaxial	mm	60/100
Twin split pipes	mm	80
Roof	mm	80/125
Nominal heat flow rate (A)(E)	kW	25,0
Exhaust temperature (E)	°C	85
Smoke production (E)	kg/h	42

CO_2 contents		
CO_2 content (range min – max)	%	9,0 – 9,8
At nominal heat input of 25,0 kW (A)(E)		
CO_2 content (range min – max)	%	9,0
At minimum heat input of 6,0 kW (A)(E)		

Other flue gas figures		
At nominal heat input – non condensing		
O_2 content	%	4,8
CO content	ppm	150
Exhaust temperature	°C	85

Other specifications		
Height	mm	803
Width	mm	400
Depth	mm	350
Weight (dry)	kg	45
Water volume in the boiler (up to 1 bar)	l (kg)	2

INSTALLATION

(E) Values refer to tests with a 1 m chimney working at the nominal heat input

INSTALLATION

4.4 Technical data mod. M110.32SM/...

Heat input			
Nominal	net (A)	kW	33,5
		BTU/h	*114 295*
	gross (B)	kW	37,2
		BTU/h	*126 920*
Minimum	net (A)	kW	11,0
		BTU/h	*37 530*
	gross (B)	kW	12,2
		BTU/h	*41 624*

Useful output		
Maximum	kW	32,7
	BTU/h	*111 566*
Minimum	kW	10,6
	BTU/h	*36 165*
Maximum condensing	kW	35,1
	BTU/h	*119 754*
Minimum condensing	kW	11,6
	BTU/h	*39 577*

Central heating		
Maximum flow temp.	°C	85
Minimum flow temp.	°C	25
Maximum pressure	kPa	250
	bar	*2,5*
Minimum pressure	kPa	30
	bar	*0,3*
Available head (in 1000 l/h)	kPa	27
	bar	*0,27*
Seasonal efficiency (C)	band	A
	%	90,0

Domestic hot water		
Maximum temperature	°C	60
Minimum temperature	°C	35
Maximum pressure	kPa	1 000
	bar	*10*
Minimum pressure	kPa	30
	bar	*0,3*
Flow rate		
minimum	l/min	2,5
30° rise (D)	l/min	16,5
35° rise (D)	l/min	14,0
40° rise (D)	l/min	12,1

Gas supply pressure G20		
Norm.	Pa	2 000
	mbar	*20*
Max	Pa	2 500
	mbar	*25*
Min.	Pa	1 700
	mbar	*17*
1 mbar approximately equals 10 mm H_2O		

Gas rate		
Max.	m^3/h	3,54
Min.	m^3/h	1,16

Restrictors references	
Gas	6,40
Air	Blue

(A) referred to the net calorific value at 15 °C and 1013,25 mbar : G 20 = 34,02 MJ/m^3

(B) referred to the gross calorific value at 15 °C and 1013,25 mbar: G 20 = 37,78 MJ/m^3

(C) The value is used in the UK Government's Standard Assessment Procedure (SAP) for energy rating of dwellings. The test data from which it has been calculated have been certified by a notified body.

(D) Values subject to tolerance

Electrical Data		
Voltage	V~	230
Frequency	Hz	50
Power consumption	W	125
Protection degree		IPX4D
External fuse rating	A	3
Internal fuse rating	A	3,15 AF

Flue design		
Flue pipe diameter		
Coaxial	mm	60/100
Twin split pipes	mm	80
Roof	mm	80/125
Nominal heat flow rate (A)(E)	kW	33,5
Exhaust temperature (E)	°C	80
Smoke production (E)	kg/h	58

CO_2 contents		
CO_2 content (range min – max)	%	9,0 – 9,8
At nominal heat input of 33,5 kW (A)(E)		
CO_2 content (range min – max)	%	9,0
At minimum heat input of 11,0 kW (A)(E)		

Other flue gas figures		
At nominal heat input – non condensing		
O_2 content	%	5,2
CO content	ppm	120
Exhaust temperature	°C	80

Other specifications		
Height	mm	803
Width	mm	400
Depth	mm	350
Weight (dry)	kg	46
Water volume in the boiler (up to 1 bar)	l (kg)	2,2

INSTALLATION

(E) Values refer to tests with a 1 m chimney working at the nominal heat input

INSTALLATION

4.5 Hydraulic specifications

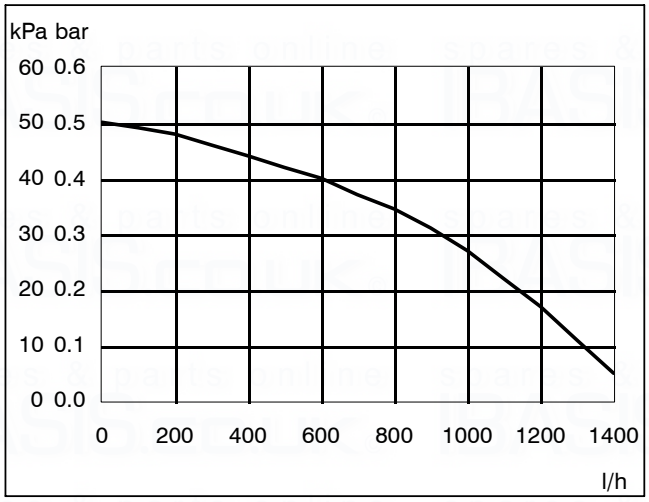

Fig. 4.3 model M110.24SM/...

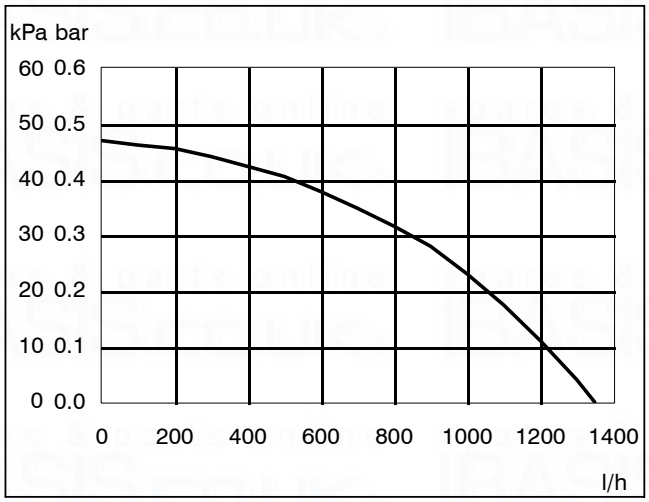

Fig. 4.4 model M110.32SM/...

The hydraulic specifications in Fig. 4.3 and Fig. 4.4 represent the pressure (available head for the central heating system) as a function of the flow rate.

The load loss due to the boiler has already been subtracted.

Operation of integral By–pass valve

The boiler is fitted with an automatic by–pass valve (44 on page 12), which protects the primary heat exchanger.

The integral automatic by–pass will ensure a minimum flow through the primary heat exchanger of the boiler in the event that the flow around the central heating circuit is restricted due to closure of thermostatic or system control valves.

4.6 Expansion vessel

Note: this boiler is designed for operation only in a sealed central heating system

The height difference between the pressure relief valve and the highest point in the system may be 7m at most.

For greater differences, increase the pre–load pressure in the expansion vessel (43 on page 12) and the system, when cold, by 0.1 bar for each additional 1m.

Capacity	l	7,0
Pre–load pressure	kPa *bar*	100 *1,0*
Maximum volume of water in the system *	l	154

Tab. 4.1

* Where conditions are:

- Average maximum temperature of the system is 80°C
- Initial temperature when filling up the system is 10°C

For systems with volumes greater than 154l, an additional expansion vessel must be provided.

5 General requirements

Biasi UK Ltd support the Benchmark initiative. The Benchmark Log Book is located at the back of this manual and should be completed by the Installing/Commissioning Engineer and handed over to the User for future reference by other visiting Engineers. Also included is the Service Interval Record card that should be completed by the Service Engineer following the annual service maintenance of the boiler and system.

For Ireland (IE), it is necessary to complete a "Declaration of Conformity" to indicate compliance to I.S.813.2002.

This appliance must be installed by a competent person in accordance with the Gas Safety (installation & Use) Regulations.

5.1 Related documents

The installation of this appliance must be in accordance with the relevant requirements of the current Gas Safety (Installation & Use) Regulations, the Local Building Regulations, the current I.E.E. Wiring Regulations, the Regulations and by–laws of the local water undertaking, and in Scotland, in accordance with the Building Standards (Scotland) Regulation. Health and safety document n° 635 "Electricity at work regs.".

It should also be in accordance with the British Standard Codes of Practice:

In Ireland (IE). The installation must be carried out by a Competent Person and installed in accordance with the current edition of I.S.813.2002 "Domestic Gas Installations" the current Building Regulations and reference should be made to the current ETCI rules for electrical installations.

5.2 Location of appliance

The appliance may be installed in any room or internal space, although particular attention is drawn to the requirements of the current I.E.E. Wiring Regulations, and in Scotland, the electrical provisions of the Building Regulations applicable in Scotland, with respect to the installation of the combined appliance in a room containing a bath or shower.

For Ireland (IE), reference should be made to the current edition of I.S.813.2002 and the current ETCI rules for electrical installations.

Where a room–sealed appliance is installed in a room containing a bath or shower, any electrical switch or appliance control, utilising mains electricity should be so situated that it cannot be touched by a person using the bath or shower.

The location must permit the provision of an adequate flue and termination.

For unusual locations special procedures may be necessary and BS 6798 gives detailed guidance on this aspect.

A compartment used to enclose the appliance must be designed specifically for this purpose.

This appliance is not suitable for external installation.

5.3 Flue system

The provision for satisfactory flue termination must be made as described in BS 5440 part 1.

For Ireland (IE), refer to I.S.813.2002.

The appliance must be installed so that the flue terminal is exposed to external air.

It must not be installed so that the terminal discharges into an other room or space as an outhouse or lean–to. It is important that the position of the terminal allows a free passage of air across at all times.

The terminal should be located with due regard for the damage or discoloration that might occur to building products in the vicinity.

In cold and/or humid weather water vapour may condense on leaving the flue terminal; the effect of such pluming must be considered.

Pluming may easily occur at the terminal. Where possible, terminal position which could cause a nuisance should be avoided.

The minimum acceptable spacing from the terminal to obstructions and ventilation openings are specified in Fig. 5.1.

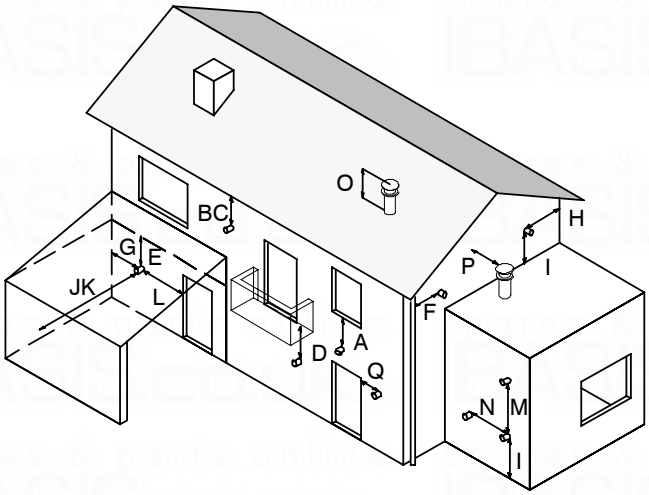

Fig. 5.1

	Terminal position	mm
A .	Directly below a window or other opening	300
B .	Below gutters, soil pipes or drain pipes	75
C .	Below eaves	200
D .	Below balconies*	600
E .	Below car port roof	NO
F .	From vertical drain pipes and soil pipes	150
G .	From internal corners**	450
H .	From external corners	300
I . .	Above ground or balcony level	300
J .	From a surface facing a terminal	600
K .	From a terminal facing a terminal	1 200
L .	From an opening in the car port (e.g. door, window) into dwelling	NO
M	Vertically from a terminal in the same wall	1 500
N .	Horizontally from a terminal in the same wall	300
O .	Above the roof pitch with roof slope less than or equal to 30°	350
	Above the roof pitch with roof slope more than 30°	600
P .	From wall face	600
Q .	From, above or to side of an opening	300

*Wherever practicable to do so, the flue should be extended beyond the perimeter of the balcony

** Consideration should be given to adding protection against condensate to the adjacent structure

5.4 Gas supply

The Gas meter is connected to the service pipe by the local gas region or a local gas region contractor.

If the gas supply for the boiler serves other appliances ensure that an adequate supply is available both to the boiler and the other appliance when they are in use at the same time.

Pipework must be of adequate size. Pipes of a smaller size than the boiler inlet connection should not be used.

Installation pipes should be fitted in accordance with BS 6891 and the complete installation should be tested for soundness.

For Ireland (IE), refer to I.S.813.2002.

5.5 Air supply

The room in which the boiler is installed does not require a purpose provided air vent.

5.6 Ventilation

If installed in a cupboard or compartment, it is not necessary to provide additional ventilation for cooling for this particular product. However consideration must be given to clearance requirements for maintenance (see section 6.2) and under no circumstances must stored articles be allowed to come into contact with the boiler or flue pipe.

5.7 Condensate drain

Ensure that the condensate discharge complies with the national or local regulations in force.

The condensate pipe must be fitted in accordance with Building Regulations.

Drainpipe material should be resistant to acid as the condensate is slightly acid with a pH less than 6.5.

The boiler includes a trap (32 on page 12) that prevents the combustion products entering the drain, however an additional trap with a seal of at least 75 mm and an air break between the traps is required (Fig. 5.2).

The length of the condensate pipe should be kept at minimum.

To avoid condensate being trapped:

- the drainpipe should be run with a fall of at least 2.5° (45 mm/m) away from the boiler;
- the number of bends and joints should be kept at minimum;

– the drainpipe should be adequately fixed to prevent pipe sagging.

If a part of the drainpipe runs externally this part should be kept as short as possible and protected to reduce the risk of freezing.

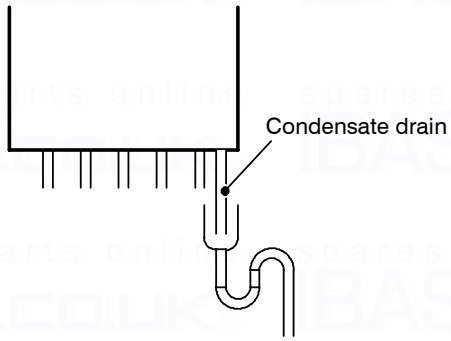

Fig. 5.2

5.8 Water circulation (c.h.)

Detailed recommendations are given in BS 6798 and BS 5449; the following notes are given for general guidance.

For Ireland (IE), refer to I.S.813.2002.

Pipework

The return temperature must not be lower of 30 °C.

Copper tubing to BS EN 1057 is recommended for water pipes. Jointing should be either with capillary soldered or with compression fittings.

Where possible pipes should have a gradient to ensure air is carried naturally to air release points and water flows naturally to drain taps.

The appliance has a built–in automatic air release valve, it should be ensured as far as possible that the appliance heat exchanger is not a natural collecting point for air.

Except where providing useful heat, pipes should be insulated to prevent heat loss and to avoid freezing.

Particular attention should be paid to pipes passing through ventilated spaces in roofs and under floors.

By–pass

The appliance includes an automatic by–pass valve which protects the main heat exchanger in case of reduced or interrupted water circulation through the heating system due to the closing of thermostatic valves or cock–type valves within the system.

The by–pass is calibrated to assure a minimum flow of 500–600 lts/hr through the main heat exchanger.

If you are installing a system that includes thermostatic radiator valves (TRV) and/or small bore (8–10 mm) it may be necessary to fit an external by–pass to facilitate correct operation of the boiler.

The fitting of an external bypass helps to prevent and limit system noise.

Air release points

These must be fitted at all high points where air will natural collect and must be sited to facilitate complete filling of the system.

Expansion vessel

The appliance has an integral sealed expansion vessel to accommodate the increase of water volume when the system is heated.

Refer to Tab. 4.1 on page 18 for its technical data.

If the heating circuit has an unusually high water content, calculate the total expansion and add an additional sealed expansion vessel with adequate capacity.

Mains water feed: central heating

There must be no direct connection to the mains water supply even through a non return valve, without the approval of the Local Water Authority.

Mains water feed: hot water supply

The domestic section of the boiler is designed to withstand an internal domestic water pressure of 10 bar. Where it is likely that the mains domestic water pressure may exceed 5 bar, it is possible due to internal “water hammer” effects that the pressure within the domestic system can increase to a level in excess of the 10 bar limit.

In these circumstances it is therefore recommended that a 3 bar pressure reducing valve be fitted to the incoming mains water supply and a mini expansion vessel installed on the domestic circuit.

These devices will protect the boiler and the domestic system from damage due to excessive domestic water pressure.

Filling

A method for initially filling the system and replacing water lost during servicing must be provided

and it must comply with local water authority regulations.

The correct method is shown in Fig. 5.3.

The temporary connection must be removed immediately after filling.

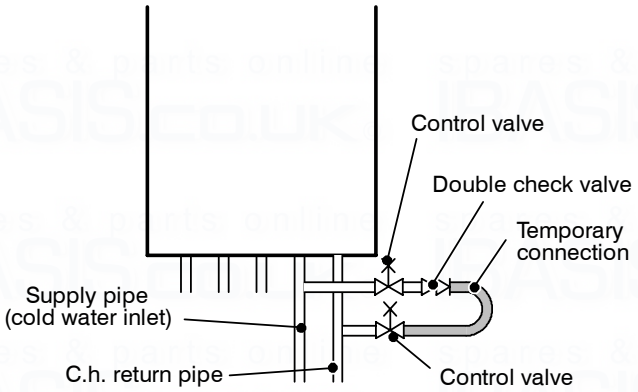

Fig. 5.3

The installer should ensure that no leaks exist either inside the boiler or on the system as frequent filling of the system could cause premature scaling of the heat exchanger.

5.9 Domestic water

The domestic water installation must be in accordance with the relevant recommendations of BS 5546. Copper tubing to BS EN 1057 is recommended for water carrying pipework and must be use for pipework carrying potable water.

For Ireland (IE), refer to I.S.813.2002.

5.10 Water treatment

Central heating circuit

Where a new boiler is fitted to a new system with either plastic or copper pipes, it is important the system is fully flushed, on completion, to ensure flux residues, swarfs, oils and other installation debris is removed.

Where a new boiler is fitted to an existing system, it is important the debris from the existing system is fully removed in order to ensure the efficiency of the new appliance is maintained.

Details on flushing procedure are given in the section 7.4 of this manual.

Domestic hot water circuit (scale protection)

In areas where the water is 'hard' (i.e. more than 200 ppm total hardness as defined by BS 7593: 2006 Table 2) it is recommended that a proprietary scale – reducing device is fitted into the boiler cold supply, within the requirements of the local water company.

5.11 Electrical supply

Warning, this appliance must be earthed.

External wiring to the appliance must be carried out by a competent person and be in accordance with the current I.E.E. Regulations and any local regulations which apply.

Reference should be made to the current ETCI rules for electrical installations.

For Ireland (IE), refer to I.S.813.2002.

The boiler is supplied for connection to a 230 V~ 50 Hz supply. The supply must be fused at 3A.

The method of connection to the electricity supply must facilitate complete electrical isolation of the appliance by the use of a fused double pole isolator having a contact separation of at least 3 mm between poles or alternatively, by the use of a 3A fused three pin plug and unswitched shuttered socket outlet both complying with BS 1363.

The point of connection to the electricity supply must be readily accessible and adjacent to the appliance except were the appliance is installed in a bathroom this must then be sited outside the bathroom.

6 Installation

6.1 Warnings

The use of gas appliances is subject to statutory control; it is essential to observe the current regulations and laws in force (see also chapter 5).

The appliance must discharge combustion products directly outside or into a suitable exhaust duct designed for this purpose.

Combustion products must be discharged using original flue kits only, since they are integral parts of the boiler.

The safety relief valve and the condensate drain must be connected to a suitable drain, or discharge in a safe manner.

The electrical wiring must conform with current Regulations, in particular:

- the boiler **must** be earthed using the correct bonding clamp.
- a fused spur isolation switch, with a gap of at least 3 mm between the contacts must be installed near to the boiler. Refer to section 6.9 in this chapter for the electrical connections.

In no circumstances will the manufacturer be held responsible if the warnings and instructions contained in this manual have not been complied with.

6.2 Precautions for installation

For the installation proceed as follows:

- The boiler must be fixed to a strong wall.
- The dimensions for the exhaust fume duct detailed in section 6.7 and the correct procedures for installing the duct, depicted in the instruction leaflet included with the flue kit, must be complied with during installation.
- To allow maintenance procedures it is necessary to leave the minimum gaps indicated in Fig. 6.1.

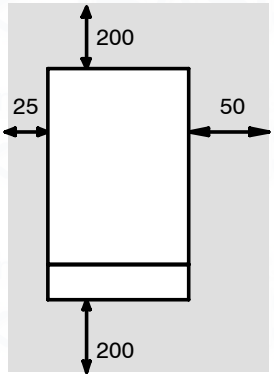

Fig. 6.1 (all dimensions in mm)

- When installing the boiler in a cupboard, cover or alcove allow at least 50mm permanent clearance from the front face of the boiler. Also ensure sufficient clearance to allow free access for servicing and the lowering of the front control panel.
- If the boiler is installed outside, cover the appliance to protect it against the elements and add some special anti–freeze (neutralised) to the c.h. system.
- Before installing the boiler on an existing c.h. system, flush it out thoroughly before fitting the boiler, so as to remove muddy deposits.
- It is advisable to equip the system with a sediment filter, or use a water–treatment product in the circulating water.
  The latter option in particular, not only cleans out the system, but also has an anti–corrosive effect by promoting formation of a protective skin on metal surfaces and neutralising gases present in the water.
  We recommend the use of a suitable universal inhibitory to protect the c.h. system from corrosion.

6.3 Installing the bracket

Precautions

Before mounting the bracket, check that the dimensions for fitting the exhaust fume duct are complied with (refer to the leaflet included with the flue kit, packed separately).

Utilise the paper template supplied with the boiler to determine the fixing position for the bracket and boiler. Securely mount the bracket to the wall using appropriate fixings suitable for the type of wall construction and capable of supporting the

total (wet) load. Refer to the weight given in the technical data tables specific for each model.

6.4 Overall dimensions

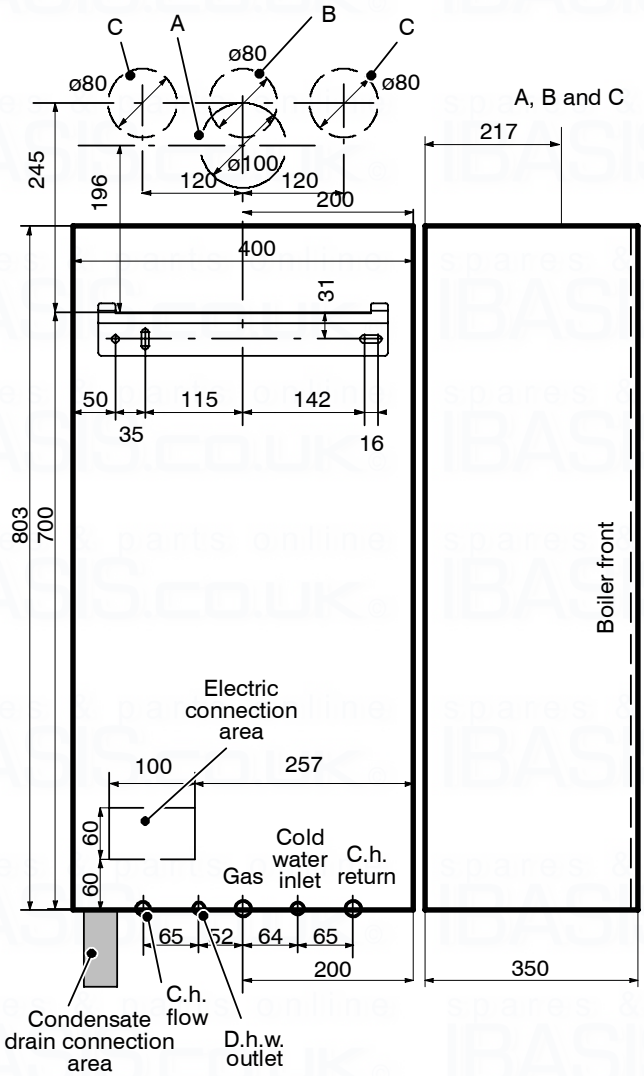

A – air intake/flue outlet pipe (co–axial)
B – flue outlet pipe ø 80 mm (twin kit)
C – air intake pipe ø 80 mm (twin kit)

Fig. 6.2 (all dimensions in mm)

6.5 Joints

Functions	Pipe sizes (o.d)
Gas, c.h. return, c.h. flow	ø 22
D.c.w. inlet	ø 15
D.h.w. outlet	ø 15
Pressure relief valve	ø 15
Condensate drain	ø 25 (plastic)

Tab. 6.1 (sizes in mm o.d.)

6.6 Mounting the boiler

1 Take the protective caps off the boiler pipework.
2 Thoroughly clean the connections.
3 Mount the boiler on its bracket.
4 Fix the c.h. valves A and gas cock B (¾") to the boiler using the ¾" gaskets (Fig. 6.3)
5 Fix the ø 22 mm pipes C (c.h. circuit) to the c.h. valves A and the ø 22 mm pipe D (gas) to the cock B using the ¾" gaskets.
6 Repeat the above procedure for the d.c.w. inlet utilising the ½" cold water inlet valve E, the ø 15 mm copper tail F with its connection nut and two ½" gaskets.
7 Fix the ø 15 mm copper tail G with the ½" connection nut and a ½" gasket.

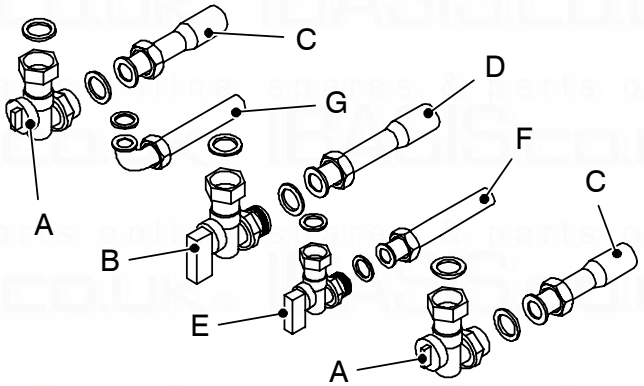

Fig. 6.3

8 Connect the pipe H (Fig. 6.4) from the pressure relief valve to the safety discharge pipework.
9 Fit the condensate drain 11 (Fig. 6.4) in the air brake connected to the drainage pipework. See also section 5.7 in this manual.

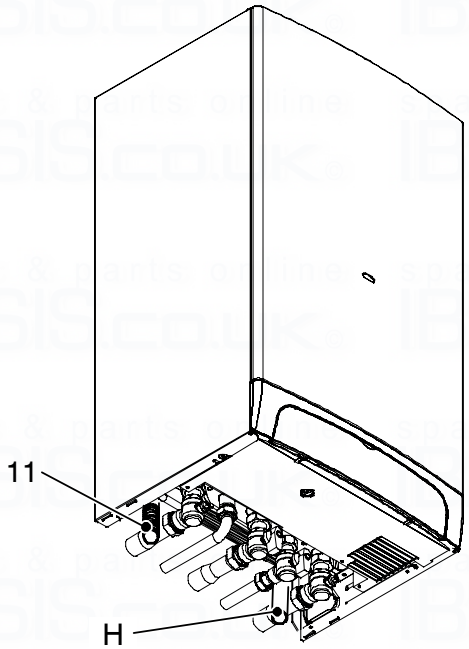

Fig. 6.4

6.7 Fitting the flue system

Refer to the assembly instructions contained within the chosen flue kit packaging for the correct assembly and installation.

In general, it has to be taken in consideration that the horizontal sections of the flue pipe must have an horizontal sloping not less than 1.5 deg. (25 mm per metre) towards the boiler.

In the standard horizontal flue kit (Fig. 6.5A) the flue pipe is angled within the air duct therefore the air duct must be horizontally installed.

If one or more extensions have to be used they must be adequately supported so that there is no sag in the flue pipe and a minimum fall of 1,5 deg. (25 mm per metre) over the whole length towards the boiler is ensured.

6.8 Choice of flue

The following flue kits are available for connecting to the boiler:

Standard horizontal flue kit (Fig. 6.5A)

Co–axial 60/100mm – nominal length 1m

This kit is normally supplied with the boiler and can be fitted to allow discharge to the rear or either side of the boiler via the flanged boiler adapter elbow. Minimum length required is 0.3 m. Maximum equivalent length of 10 metres can be achieved utilising extensions. This flue system can only be used to discharge horizontally, it is not designed to enable termination in the vertical plane.

Vertical kit with 90˚ elbow (Fig. 6.5B)

Co–axial 60/100 mm

Supplied with a straight flanged adapter a co–axial elbow and a co–axial pipe with terminal, this kit allows for a vertical rise of 0,5 m from the boiler. In all circumstances the flue terminal must discharge horizontally and the equivalent flue length must not exceed 10 metres.

Elbows 45˚ & 90˚ (Fig. 6.5C)

Co–axial 60/100mm.

Elbow kits enable the standard flue kits to be offset to overcome obstructions or ensure the correct clearances for the flue terminal. Each elbow used in addition to the standard flanged elbow reduces the overall acceptable length of the flue system as follows:

45˚ reduce length by 0.5 m.
90˚ reduce length by 1 m.

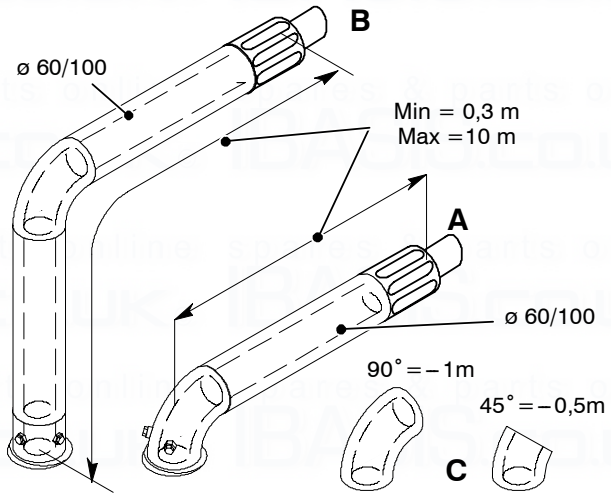

Fig. 6.5

Twin pipe kits ø 80 mm (Fig. 6.6)

Various twin (split) pipes kits and optional accessories (elbows) are available to assist in the termination of the flue where the boiler is installed in a location remote to an outside wall.

These kits allow for separation of the air supply pipe from the pipe that discharges the exhaust gasses. Consequently it is possible to extend the flue system to a greater distance than that provided by the standard horizontal co–axial flue.

If either an additional 45˚ or 90˚ accessory elbow is used then the maximum permissible length of

INSTALLATION

either pipe must be reduced by 0.90 m or 1,65 m respectively.

Referring to Fig. 6.6, the minimum length required for pipes a and b is 0.3 m.

Maximum equivalent length “a+b” of 40 metres can be achieved utilising extensions.

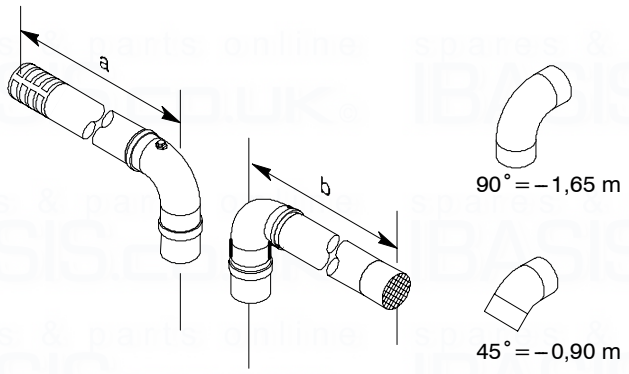

Fig. 6.6

Vertical – roof kit (Fig. 6.7)

Co – axial 80/125 mm

This kit allows vertical termination of the flue pipe through the roof. The kit is 1.2 min length. Extension pieces (Co – axial) are also available which allows the flue system to be extended to a total overall maximum permissible length of 10 m. Optional 45° and 90° elbows can be used to offset the flue route.

Each additional elbow reduces the overall acceptable length of the flue system as follows:

45° reduce length by 0.5 m.
90° reduce length by 1 m.

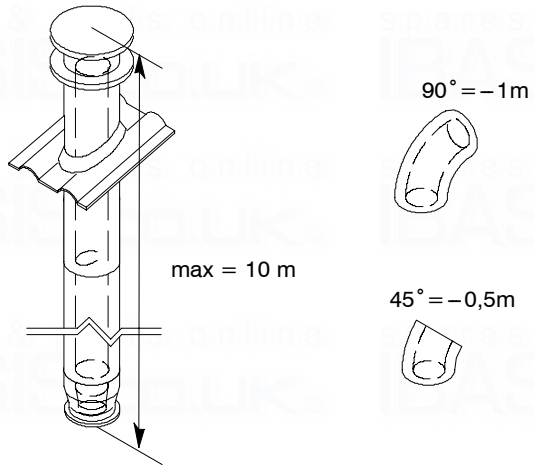

Fig. 6.7

6.9 Electrical connections

Connection to the electricity supply

1 Remove the front panel of the case (see the section 8.2 in this manual).

2 Remove the screws I and J (Fig. 6.8).

3 Loosen the screws *K.*

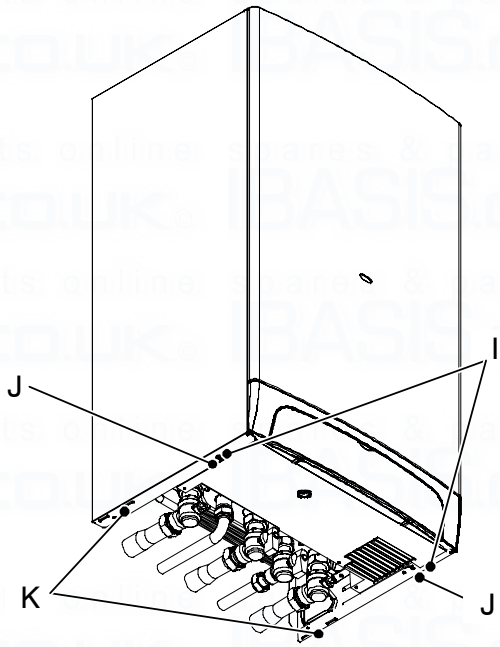

Fig. 6.8

4 Remove the side panels or move the lower part of the side panels as indicated in Fig. 6.9 and pull the control panel.
When completely pulled out, the panel can rotate 45° downwards to facilitate the operations on the internal parts.

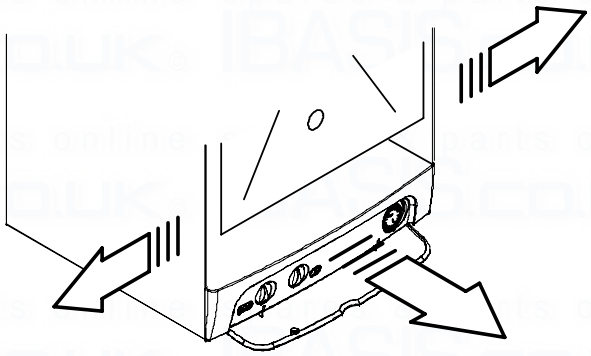

Fig. 6.9

5 Loosen the screws L and remove the service panel (Fig. 6.10).

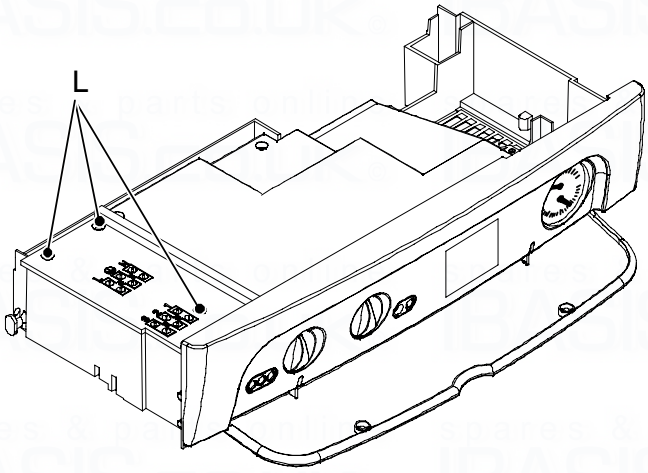

Fig. 6.10

For the electrical connection to the boiler use electric wires which conform to the current regulations, with flexible cord, each core having a cross section area **not less than 0,75 mm²**.

6 Connect the electrical supply flexible cord coming from the fused spur isolation switch to the power supply terminal block of the boiler (Fig. 6.11) keeping the same connections for the live (brown wire) and the neutral (blue wire). External 3 A fuse or fused plug with same current rating is recommended.
Do not connect live wires to terminals to which the room thermostat must be connected.

7 **Connect the earth wire (yellow/green).**

Connection of a room thermostat

The room thermostat must be connected to the terminal block situated next to the control panel.

Any external controls and connection lines must be rated at 230 V but under no circumstances should external live voltage be connected to the room thermostat link on the boiler.

Do not connect live wires to terminals to which the room thermostat must be connected.

When connecting any type of external control, the link M in Fig. 6.11 must be removed.

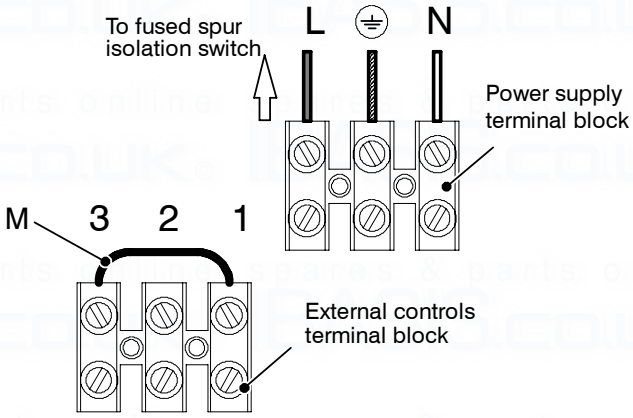

Fig. 6.11

8 Connect the room thermostat between terminals 1 and 3 as shown in Fig. 6.12 or Fig. 6.13.

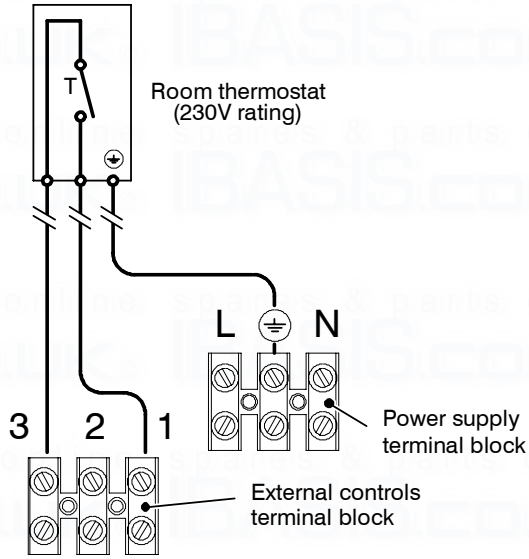

Fig. 6.12

INSTALLATION

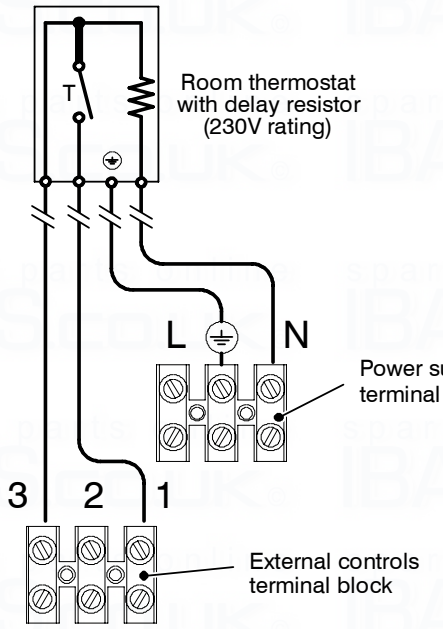

Fig. 6.13

9 Route the electrical supply flexible cord and the external control flexible cord as illustrated in Fig. 6.14.
Lock the flexible cords in place with the flexible cord clamps

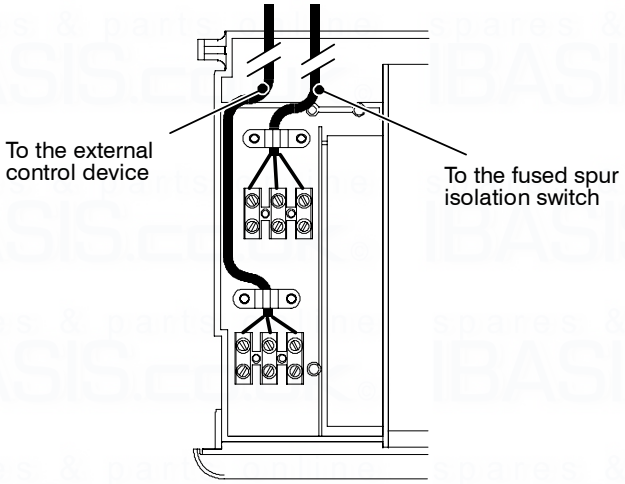

Fig. 6.14

6.10 External frost protection

10 Connect the frost thermostat between terminals 1 and 2 as shown in Fig. 6.15 or Fig. 6.16.
Do not connect live wires to terminals to which the frost thermostat must be connected.

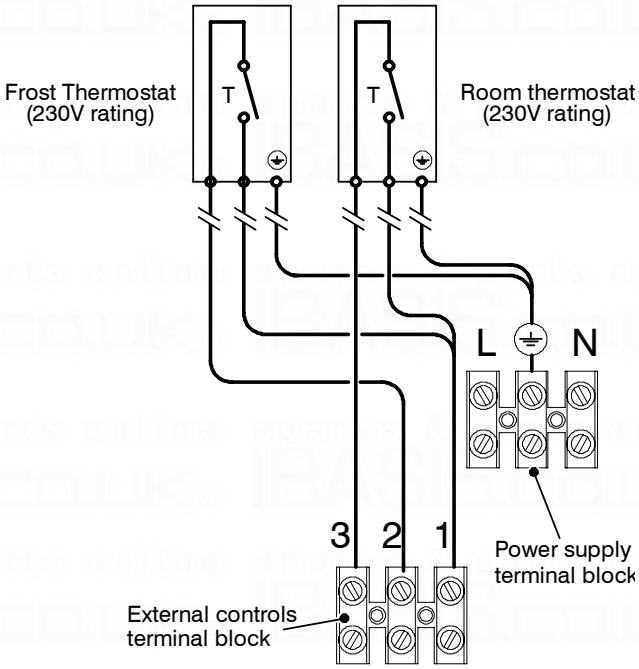

Fig. 6.15

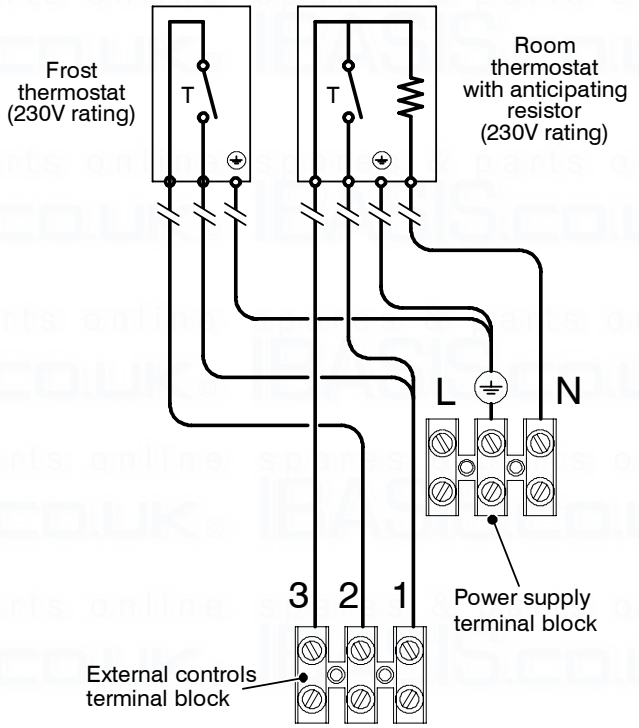

Fig. 6.16

6.11 External temperature probe (optional)

Location

The external temperature probe must be installed on an external wall of the building avoiding:

- the possibility of direct exposure to the sun's rays,
- places subject to humidity or mould,
- the proximity of fans, ventilation openings or flue terminals.

Connection

For the electrical connection to the boiler use electric wires which conform to the current regulations, with flexible cord, each core having a cross section area **not less than 0,50 mm^2**.

The connection wiring of the external temperature probe is part of a safety extra – low voltage circuit therefore it has to be routed through a duct separated from the mains voltage wirings.

The maximum allowable length of the wiring is 20 m.

For details concerning the connection of the probe to the boiler refer to the instructions given with the external temperature probe kit.

spares & parts online IBASIS.CO.UK

7 Commissioning

WARNING
The commissioning of this boiler and system must only be undertaken by a professionally qualified person in accordance with the requirements of the Gas Safety Installation and Use Regulations and be approved by C.O.R.G.I.

Ensure that the Benchmark Log Book is satisfactorily completed during the commissioning process. The Log Book is located at the end of this manual. This manual should be handed to the User following completion of the installation and commissioning process. Failure to comply with these requirements may invalidate the manufacturers guarantee.

For Ireland (IE), it is necessary to complete a "Declaration of Conformity" to indicate compliance to I.S.813.2002.

INSTALLATION

7.1 Electrical installation

Preliminary electrical system checks to ensure electrical safety shall be carried out by a competent person. i.e. polarity, earth continuity, resistance to earth and short circuit.

If a fault has occurred on the appliance the fault finding procedure should be followed as specified in the service manual.

7.2 Gas supply installation

1 Inspect the entire installation including the gas meter, test for soundness and purge, all as described in BS 6891;

For Ireland (IE), refer to I.S.813.2002.

2 Open the gas cock 14 (Fig. 7.1) on the appliance and check the gas connector on the appliance for leaks.

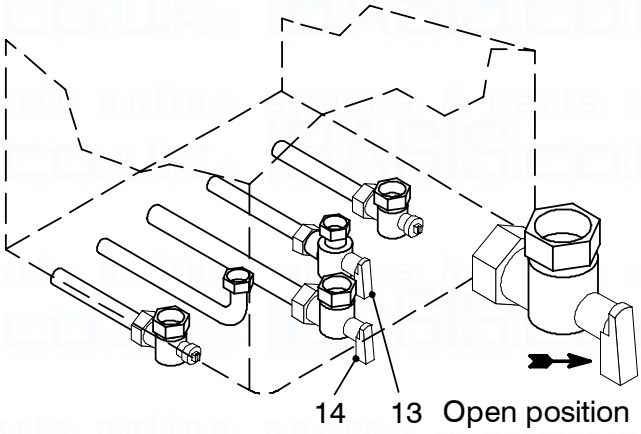

Fig. 7.1

7.3 Filling the d.h.w. system

1 Close all hot water draw–off taps.

2 Open the cold water inlet valve 13 (Fig. 7.1).

3 Slowly open each draw–off tap and close it only when clear water, free of bubbles, flows out.

7.4 Initial filling of the system

1 Open the c.h. flow and return valves.

2 Remove the front and side panels of the case (see the section 8.2 in this manual) and the sealed chamber lid.

3 Unscrew the condensing heat exchanger air purger valve 17 (Fig. 7.2).

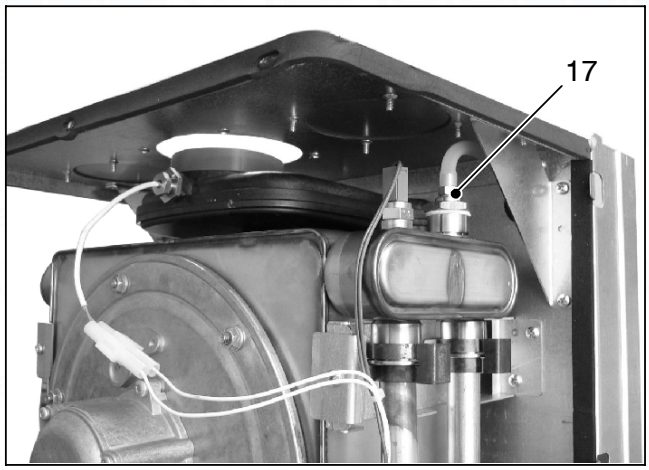

Fig. 7.2

4 Unscrew the cap on the automatic air purger valve 25 (Fig. 7.3) one full turn and leave open permanently.

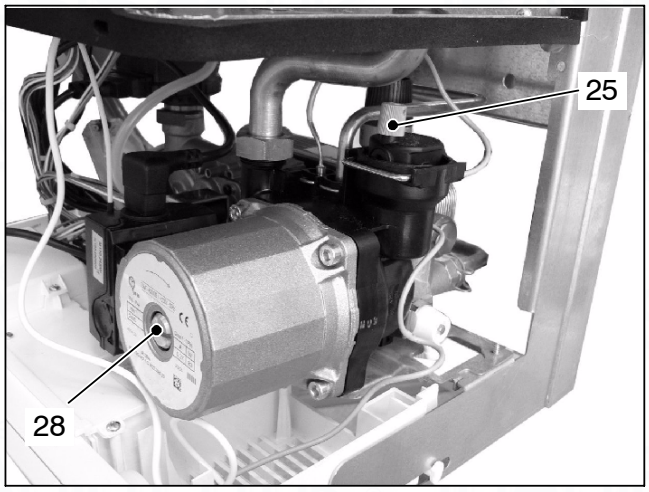

Fig. 7.3

5 Gradually open stopcock at the filling point connection to the c.h. system until water is heard to flow; do not open fully.

6 Close the condensing heat exchanger air purger valve 17 (Fig. 7.2) when water begins to flow out.

7 Open each radiator air vent starting at the lowest point of the system and close it only when clear water, free of bubbles, flows out.

8 Purge the air from the pump by unscrewing the pump plug 28 (Fig. 7.3); release the pump shaft by turning in the direction indicated by the arrow on the information plate.

9 Replace the pump plug.

10 Continue filling the system. The actual reading should ideally be 1,3 bar and not less than 0,3 bar.

11 Close all air release valves on the c.h. system.

12 Inspect the boiler and the system for water soundness and remedy any leaks discovered.

13 Cold flush the system to remove any loose particles and any system debris before starting the boiler for the first time

The flushing procedure must be in line with BS7593:2006 *Treatment of Water in d.h.w. c.h. Systems.*

When the installation and second filling are completed turn on the c.h. system and run it until the temperature has reached the boiler operating temperature. The system must then be immediately flushed through.

This procedure must be repeated twice more.

During this operation we highly recommend the use of a c.h. flushing detergent in the quantities as specified by the appropriate manufacturer, whose function it is to dissolve any foreign matter which may be in the system.

INHIBITION (Primary Heating Circuit)

On the final refilling of the heating system it is important to ensure the system water is treated with a suitable scale and corrosion inhibitor in accordance with the manufacturers instructions.

7.5 Condensate pipe and traps

The full length of the condensate pipe should be check for leaks.

The boiler has a built–in condensate trap provided with a ball valve that prevents the escape of combustion products when the trap is empty.

It is however recommended that any other trap in the drain system is correctly filled with water before to run the boiler.

INSTALLATION

7.6 Lighting the boiler

Some products incorporate an anti cycling time delay. It is normal when first switching the boiler on for the boiler to operate on heating for a few seconds then switch off. After 3–4 minutes has elapsed the boiler will then re ignite and operate perfectly normally. The ignition delay cycle does not prevent normal operation of the boiler to provide d.h.w..

If external controls are fitted (e. g. Timeclock, room thermostat) ensure they ”call for heat”.

1 Turn on the electricity supply to the boiler, switching on the fused spur isolation switch. The appliance operation light 10 will flash every 4 seconds.

2 Turn the function selector 8 as in Fig. 7.4. The appliance operation light 10 will flash every 2 seconds.

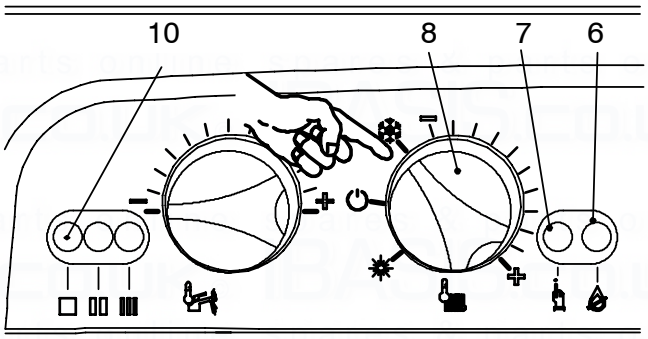

Fig. 7.4

The boiler will now go through an ignition sequence and the burner will light.

If after four ignition attempts (about four minutes) the boiler fails to light, the boiler will go to lockout and the lock–out signal lamp 6 will appear.

To reset the boiler press and release the boiler reset button 7.

For the first lighting up and following maintenance procedures for the gas supply, it may be necessary to repeat the resetting operation several times so as to remove the air present in the pipework.

After five consecutive resetting attempts the reset button is inhibited. To restore its function it is necessary to switch the boiler off and on from the electrical mains, using the fused spur isolation switch fitted adjacent to the appliance.

7.7 Checking the gas supply pressure

This boiler has been tested to the highest quality control standards.

The maximum and minimum gas pressures are already set during this quality control process and the appliance does not need any particular adjustment.

However if there is variation to the gas supply pressure it is possible that a harmonic noise could resonate through the boiler during operation. In these circumstances it maybe necessary to reset the gas valve in accordance with the section 11 Gas Valve of the Service Manual. It should be noted that a flue gas analyser is required for this procedure.

Checking the inlet pressure

1 Remove the front panel of the case (see section 8.2) and lower the control panel (see section 6.9).

2 Loosen the internal screw on the Inlet Pressure Test Point 41 (Fig. 7.5) of the Gas Valve and connect a pressure gauge using a suitable hose.

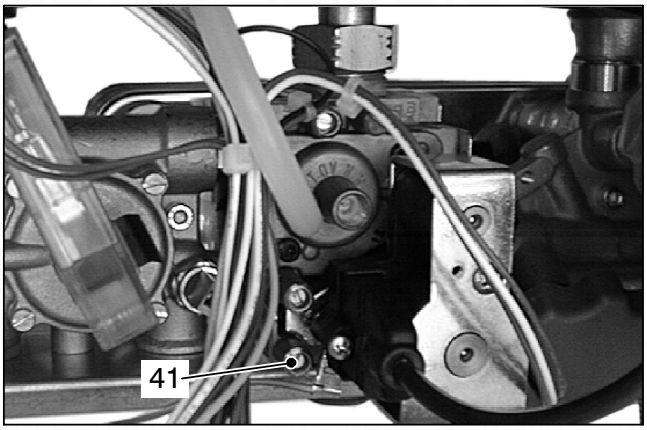

Fig. 7.5

3 Open the gas inlet valve (14 on page 2).

4 Turn on the electricity supply to the boiler, switching on the fused spur isolation switch. The appliance operation light 10 will flash every 4 seconds.

5 Set the function knob 8 as illustrated in Fig. 7.6.

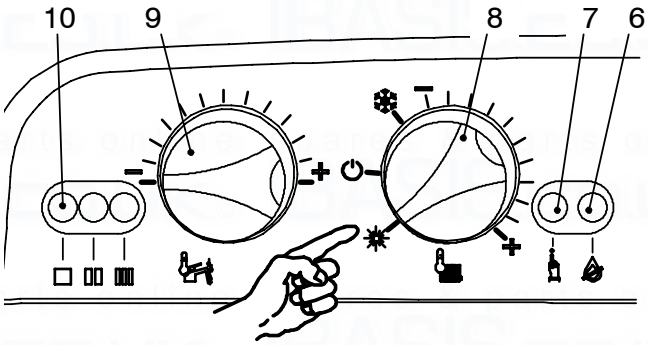

Fig. 7.6

6 Open at least one hot water tap fully.

7 Read the inlet pressure value and ensure that it is within the limits given in the table *Gas supply pressures,* sections 4.3 and 4.4 of this manual.
If it does not comply with the required pressure check the gas supply line and governor for faults and/or correct adjustment.

8 Switch off the boiler **close the gas inlet valve** and close the water tap.

9 Disconnect the pressure gauge and close the Inlet Pressure Test Point 41 (Fig. 7.5).

Important: after the checks all of the test points must be sealed.

7.8 Maximum output in c.h. mode

The maximum useful output in c.h. mode of model can be varied and on model M110.32SM/... is factory set to 24 kW.

To change the maximum useful output value in c.h. mode refer to the *electronic control/ignition pcb* section of the service manual

7.9 External temperature probe setting (optional)

The external temperature probe (if fitted) allows to adjust automatically the temperature of the c.h. flow with reference to the external temperature.

The curves given in the chart of Fig. 7.7 represent the c.h. flow temperature setting as a function of the external temperature measured by the external temp. probe.

The relationship between the external temperature and the c.h. flow temperature is represented by the coefficient K (Fig. 7.7) that can be set between 0 and 6 as hereafter explained.

E.g. to obtain a flow temperature setting of 60 °C when the external temperature is –5 °C, K must be set to 1,5 (dashed line in Fig. 7.7).

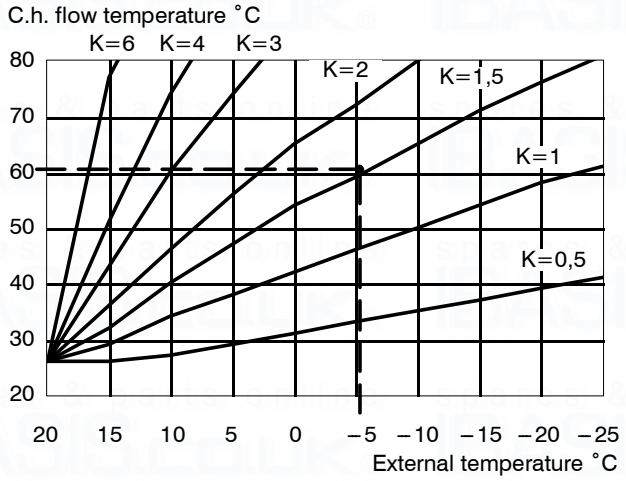

Fig. 7.7

The appropriate value of the coefficient K depends on the design temperatures of the c.h. system as the minimum external temperature and the corresponding c.h. flow temperature.

The coefficient K is factory set to 0 that is the setting for the operation with no external temperature probe fitted.

To set the coefficient K:

1 Turn on the electricity supply to the boiler, switching on the fused spur isolation switch.

2 Set the function knob 8 as illustrated in Fig. 7.8.

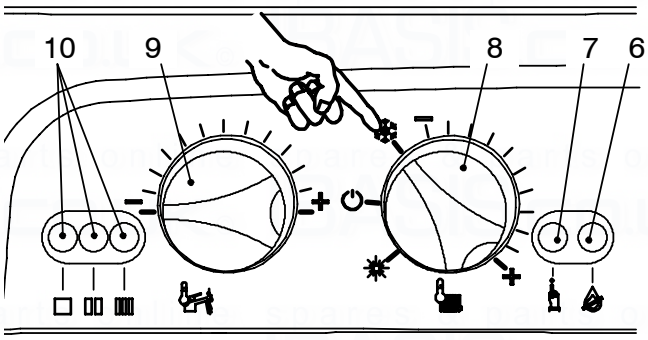

Fig. 7.8

3 Keep pressed the reset button 7 for about 10 seconds until the lock–out signal lamp 6 blinks.

4 The lamps should give the indication as in Fig. 7.9 (coefficient K setting). If not, press the reset button repeatedly to obtain it.

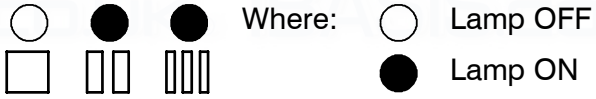

Fig. 7.9

5 To change the setting turn the knob 9 on a position corresponding to the desired coefficient K. By turning the knob 9, the lock–out signal lamp 6 blinks quickly (2 per seconds) indicating that the setting has changed and must be memorised.

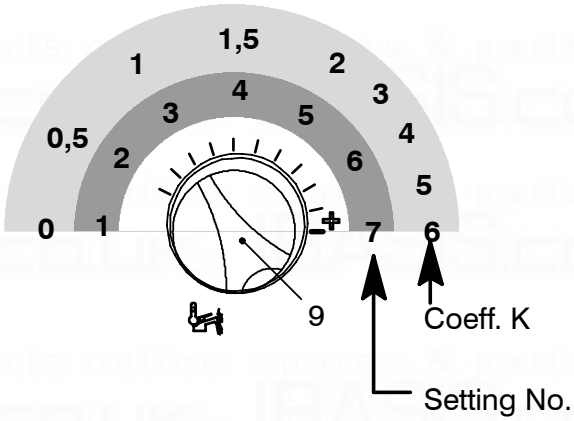

Fig. 7.10

6 To memorize the setting keep pressed the reset button 7 for about 5 seconds until the lights 10 briefly blinks simultaneously.

7 To reset the boiler to the normal operation turn it OFF and ON by the function selector knob 8.

INSTALLATION

In any case, the boiler automatically resets to its normal operation after 10 minutes.

After setting the coefficient K, position the knob 8 as shown in Fig. 7.11 in order to obtain the c.h. flow temperature accordingly with the chart of Fig. 7.7.

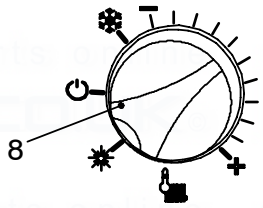

Fig. 7.11

However, the setting point of the c.h. flow temperature can be manually increased or decreased within a range of ±15 °C by turning the knob 8.

The effect of the knob 8 for a coefficient K set to 1,5 is illustrated in Fig. 7.12.

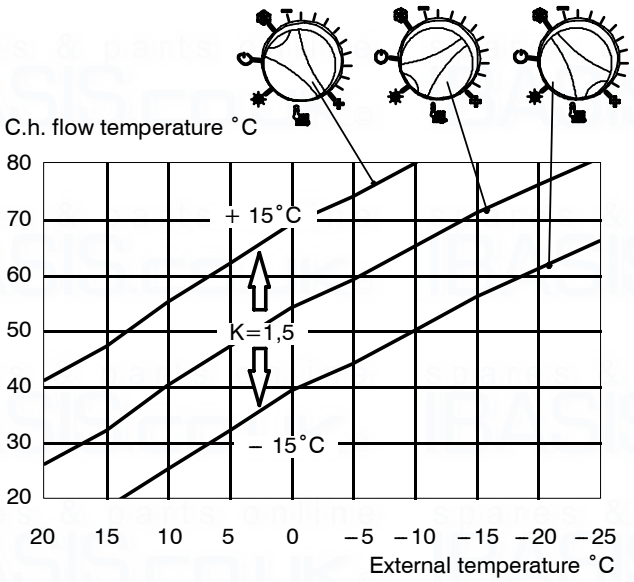

Fig. 7.12

7.10 Checking the ignition device

With the burner on high flame close the gas cock.

After four ignition attempts (within about four minutes), the lock–out signal lamp 6 (Fig. 1.3 on page 2) must appear.

To reset the boiler press and release the boiler reset button 7 (Fig. 1.3 on page 2).

7.11 Checking the flue system

The flue system should be visually checked for soundness. Check all clamps, gaskets and fixing are secure and tight.

Ensure that the flue terminal is sited correctly in accordance with the flue fitting instructions and Fig. 5.1 on page 20 of this manual.

To carry out a combustion check refer to the instructions given in the section 8.5 of this manual.

Reference figures are given in the sections 4.3 or 4.4 of this manual (Flue gas figures).

7.12 Checking the condensate drain pipe

Check the soundness and integrity of the condensate drain pipe.

Verify the cleanness and correct filling of the condensate traps.

7.13 Instructing the user

Hand over this combined User & Installation manual and the Service manual to the end user and explain how to use the unit in both c.h. and d.h.w. modes.

Take the User step by step through the lighting instructions.

Show the User how to switch off the appliance quickly and indicate the position of the electric supply isolator.

Explain the proper use and adjustment of all system controls; this will ensure the greatest possible fuel economy.

Explain the function and use of the function selector.

Explain and demonstrate the function of time and temperature controls (if fitted).

Explain how to turn off the appliance for both short and long periods and advise on the precautions necessary to prevent damage should the appliance be inoperative when freezing conditions may occur.

Fill in the details required on the Boiler Guarantee Certificate and hand to the User advising them to return the correct section for boiler Guarantee registration.

Finally, advise the User that, for continued safe and efficient operation, the appliance must be serviced by a competent person at least once a year.

8 Maintenance

8.1 Warnings

The procedures detailed in this chapter **must be carried out only by a professionally qualified person.** Thus you are advised to contact an Authorised Service Agent.

For Ireland (IE), the servicing work must be carried out by a competent Person

For efficient and continuous operation of the boiler you are advised to have, at least once a year, maintenance and cleaning done by an Approved Service engineer.

Isolate the appliance from the electricity supply by turning off the fused spur isolation switch adjacent to the appliance and **turn off the gas** cock, before carrying out any procedures, whatsoever, for cleaning, maintenance, opening or dismantling boiler panels.

8.2 Dismantling the external panels

Front panel

1 Loosen the three screws A (Fig. 8.1).

2 Lift and remove the panel B.

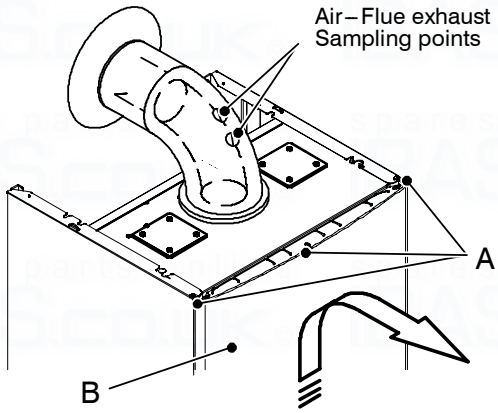

Fig. 8.1

Side panels

3 Loosen the screws C. Bring the bottom of the panels away from the boiler and lift them, freeing them from the top hooks (Fig. 8.2).

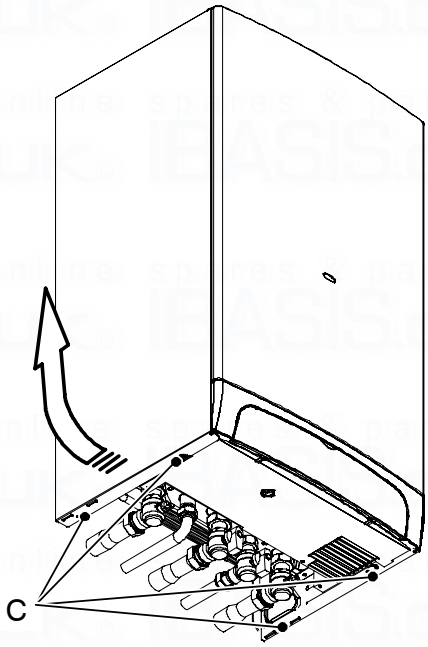

Fig. 8.2

8.3 Emptying the d.h.w. system

1 Turn off the d.c.w. inlet isolating valve (13 in Fig. 8.3) and turn on the hot water taps and any drain cocks.

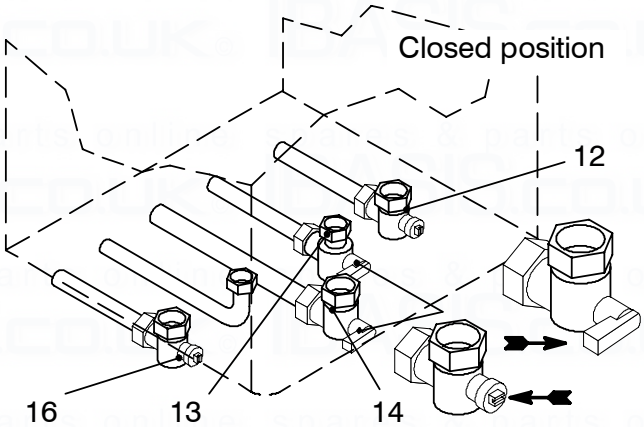

Fig. 8.3

8.4 Emptying the c.h. system

1 Close the c.h. isolating valves (12 and 16 in Fig. 8.3).

2 Open the central heating drain cock (26 in Fig. 8.4).

MAINTENANCE

3 A small quantity of water will remain in the d.h.w. heat exchanger after draining. If the boiler is being drained to prevent freezing, the d.h.w. heat exchanger must be removed and inverted to drain fully or an antifreeze solution added.

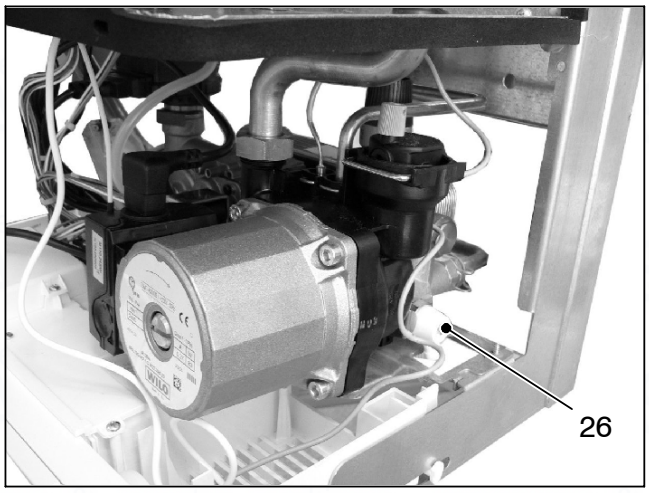

Fig. 8.4

8.5 Combustion analysis check

If it is necessary to carry out a combustion analysis remove the plugs indicated in Fig. 8.1.

Reference figures are given in the sections 4.3 or 4.4 of this manual.

8.6 Cleaning the condensing heat exchanger and burner

To remove the burner–fan group D (Fig. 8.5):

1 Take off the front and side panels of the case.

2 Remove the sealed chamber lid.

3 Disconnect the connectors of the ignition electrodes E and detection electrode F (Fig. 8.5).

4 Disconnect the rubber pipe G (Fig. 8.6).

5 Unscrew the gas connector H (Fig. 8.5).

6 Remove the fixing fork I and remove the gas pipe J (Fig. 8.6).

7 Leave the air box with the air hose clamped to the water pipe.

8 Remove the nuts K (Fig. 8.5) and the burner–fan group D.

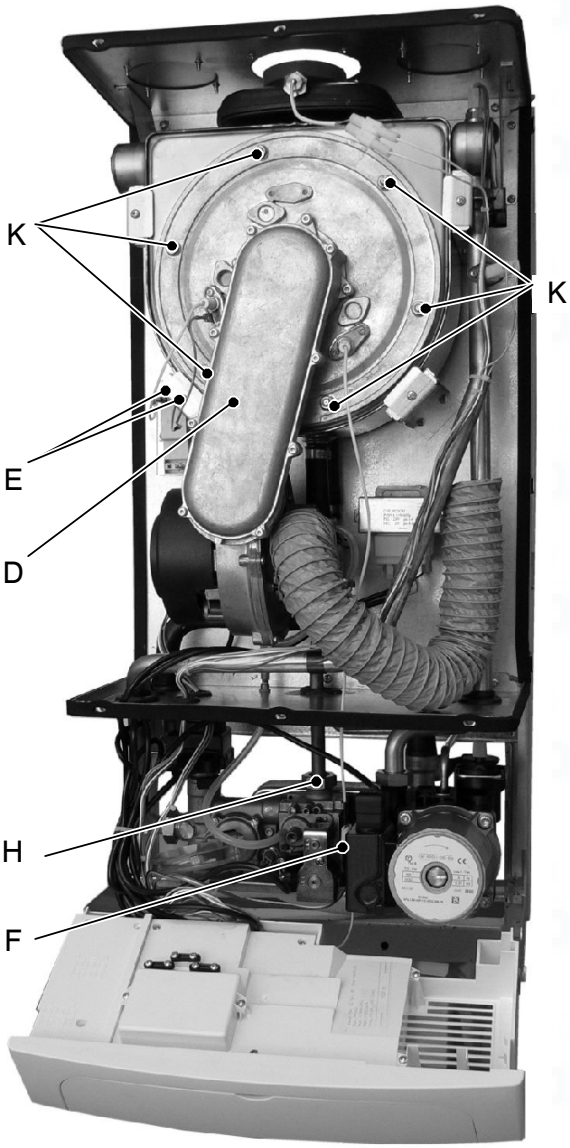

Fig. 8.5

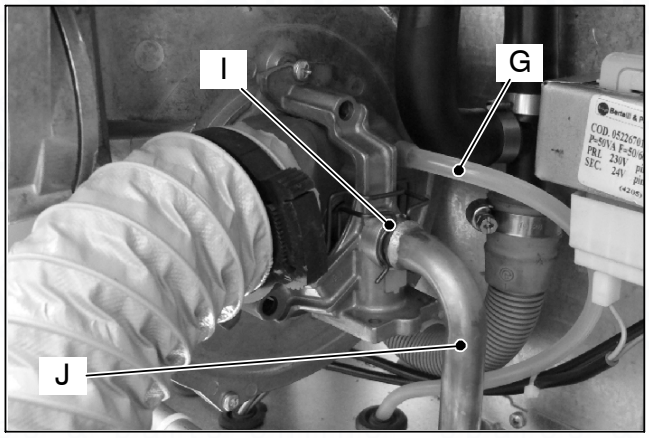

Fig. 8.6 (right side of the fan)

9 Disconnect the connector of the fan L by pressing the plastic hook M placed on the rear side of the connector (Fig. 8.7).

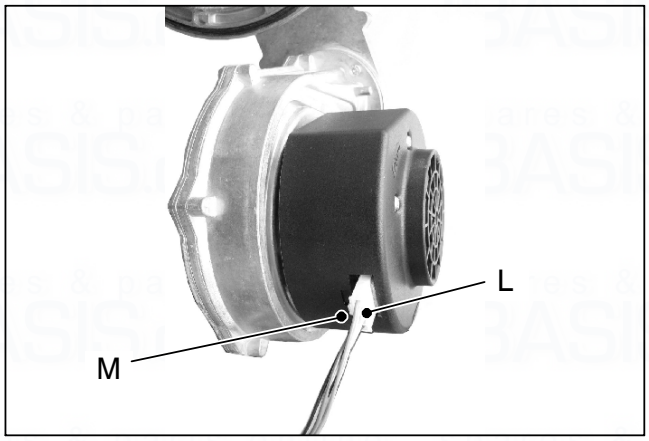

Fig. 8.7 (rear view of the fan)

If you notice dirt on the coil of the condensing heat exchanger (19 on page 12) brush out it with a bristle paintbrush and remove the dust with a hoover.

Reassemble the parts carrying out the removal operations in reverse order.

8.7 Checking the pressurisation in the expansion vessel

Empty the central heating system as described in section 8.4 of this chapter and check that the pressure in the expansion vessel is not less than 1 bar. See also section 4.6 page 18 of this manual.

If the pressure is lower, take steps to correct the pressure level.

8.8 Cleaning the burner

The burner (38 on page 12) does not need special maintenance, but it is sufficient to dust it with a bristle paintbrush.

To reach the burner do the operations described in the section 8.6 of this manual

8.9 Checking the flue

Have the integrity of the flue outlet pipe (47 on page 13) air intake pipe (48 on page 13), checked periodically, at least once a year.

For all the above maintenance operations it is advisable to call an approved Service Engineer.

8.10 Drain pipe inspection

Check the soundness and integrity of the condensate drain pipe.

Verify the cleanness and correct filling of the condensate traps.

8.11 Visual inspection of appliance

Visually inspect all water joints, seals and connections for any evidence of leakage and retighten, grease or replace them as necessary.

8.12 Gas pressures and soundness

Check appliance for gas soundness. Recheck operational pressures as described in section 7.7 page 32 of this manual.

8.13 Water inhibitor concentration

Where chemical products are used the level of water treatment should be checked on an annual basis and re treated after full or partial drain down. A conductivity meter can be used to check the correct concentration of inhibitor in the heating water.

BENCHMARK No. | | | | | | |

GAS BOILER COMMISSIONING CHECKLIST

BOILER SERIAL No. _____ **NOTIFICATION No.** _____

CONTROLS *To comply with the Building Regulations, each section must have a tick in one or other of the boxes*

TIME & TEMPERATURE CONTROL TO HEATING	ROOM T/STAT & PROGRAMMER/TIMER	☐	PROGRAMMABLE ROOMSTAT	☐
TIME & TEMPERATURE CONTROL TO HOT WATER	CYLINDER T/STAT & PROGRAMMER/TIMER	☐	COMBI BOILER	☐
HEATING ZONE VALVES	FITTED	☐	NOT REQUIRED	☐
HOT WATER ZONE VALVES	FITTED	☐	NOT REQUIRED	☐
THERMOSTATIC RADIATOR VALVES	FITTED	☐		
AUTOMATIC BYPASS TO SYSTEM	FITTED	☐	NOT REQUIRED	☐

FOR ALL BOILERS CONFIRM THE FOLLOWING

THE SYSTEM HAS BEEN FLUSHED IN ACCORDANCE WITH THE BOILER MANUFACTURER'S INSTRUCTIONS? ☐

THE SYSTEM CLEANER USED

THE INHIBITOR USED

FOR THE CENTRAL HEATING MODE, MEASURE & RECORD

GAS RATE		m^3/hr		ft^3/hr
BURNER OPERATING PRESSURE (IF APPLICABLE)	☐	N/A		mbar
CENTRAL HEATING FLOW TEMPERATURE				°C
CENTRAL HEATING RETURN TEMPERATURE				°C

FOR COMBINATION BOILERS ONLY

HAS A WATER SCALE REDUCER BEEN FITTED? YES ☐ NO ☐

WHAT TYPE OF SCALE REDUCER HAS BEEN FITTED?

FOR THE DOMESTIC HOT WATER MODE, MEASURE & RECORD

GAS RATE		m^3/hr		ft^3/hr
MAXIMUM BURNER OPERATING PRESSURE (IF APPLICABLE)	☐	N/A		mbar
COLD WATER INLET TEMPERATURE				°C
HOT WATER OUTLET TEMPERATURE				°C
WATER FLOW RATE				lts/min

FOR CONDENSING BOILERS ONLY CONFIRM THE FOLLOWING

THE CONDENSATE DRAIN HAS BEEN INSTALLED IN ACCORDANCE WITH THE MANUFACTURER'S INSTRUCTIONS? YES ☐

FOR ALL INSTALLATIONS CONFIRM THE FOLLOWING

THE HEATING AND HOT WATER SYSTEM COMPLIES WITH CURRENT BUILDING REGULATIONS ☐

THE APPLIANCE AND ASSOCIATED EQUIPMENT HAS BEEN INSTALLED AND COMMISSIONED IN ACCORDANCE WITH THE MANUFACTURER'S INSTRUCTIONS ☐

IF REQUIRED BY THE MANUFACTURER, HAVE YOU RECORDED A CO/CO_2 RATIO READING? N/A ☐ YES _____ CO/CO_2 RATIO

THE OPERATION OF THE APPLIANCE AND SYSTEM CONTROLS HAVE BEEN DEMONSTRATED TO THE CUSTOMER ☐

THE MANUFACTURER'S LITERATURE HAS BEEN LEFT WITH THE CUSTOMER ☐

COMMISSIONING ENG'S NAME PRINT _____ CORGI ID No. _____

SIGN _____ DATE _____

SERVICE INTERVAL RECORD

It is recommended that your heating system is serviced regularly
and that you complete the appropriate Service Interval Record Below.

Service Provider. Before completing the appropriate Service Interval Record below, please ensure you have carried out the service as described in the boiler manufacturer's instructions. Always use the manufacturer's specified spare part when replacing all controls

SERVICE 1 DATE
ENGINEER NAME
COMPANY NAME
TEL No.
CORGI ID CARD SERIAL No.
COMMENTS
SIGNATURE

SERVICE 2 DATE
ENGINEER NAME
COMPANY NAME
TEL No.
CORGI ID CARD SERIAL No.
COMMENTS
SIGNATURE

SERVICE 3 DATE
ENGINEER NAME
COMPANY NAME
TEL No.
CORGI ID CARD SERIAL No.
COMMENTS
SIGNATURE

SERVICE 4 DATE
ENGINEER NAME
COMPANY NAME
TEL No.
CORGI ID CARD SERIAL No.
COMMENTS
SIGNATURE

SERVICE 5 DATE
ENGINEER NAME
COMPANY NAME
TEL No.
CORGI ID CARD SERIAL No.
COMMENTS
SIGNATURE

SERVICE 6 DATE
ENGINEER NAME
COMPANY NAME
TEL No.
CORGI ID CARD SERIAL No.
COMMENTS
SIGNATURE

SERVICE 7 DATE
ENGINEER NAME
COMPANY NAME
TEL No.
CORGI ID CARD SERIAL No.
COMMENTS
SIGNATURE

SERVICE 8 DATE
ENGINEER NAME
COMPANY NAME
TEL No.
CORGI ID CARD SERIAL No.
COMMENTS
SIGNATURE

SERVICE 9 DATE
ENGINEER NAME
COMPANY NAME
TEL No.
CORGI ID CARD SERIAL No.
COMMENTS
SIGNATURE

SERVICE 10 DATE
ENGINEER NAME
COMPANY NAME
TEL No.
CORGI ID CARD SERIAL No.
COMMENTS
SIGNATURE

17962.1118.2 0407 44A5 UK

Biasi UK Ltd
Newman Park, Western Way
Wednesbury, WS10 7BJ
Sales Tel No: 0121 506 1340
Sales Fax No: 0121 506 1360
Service Tel No: 0121 506 1350
Service Fax No: 0121 506 1370
www.biasi.co.uk