Wall hung, fanflue, roomsealed, high efficiency gas boiler

User manual and Installation instructions

Advance Plus ERP

Models	G.C. Appl. No.
Advance Plus 25C ERP	**47-583-35**
Advance Plus 30C ERP	**47-583-36**
Advance Plus 35C ERP	**47-583-37**

energy saving recommended

BIASI

spares & parts online IBASIS.CO.UK

WARNING

Congratulations on your choice.

Advance Plus ERP are condensing high efficiency sealed chamber fan flue gas boilers. They are fully electronically controlled and have electronic ignition.
The materials they are made of and the control systems they are equipped with give you safety, a high level of comfort and energy savings to allow you to get the greatest benefit out of independent heating.
Advance Plus ERP allow a higher efficiency by reducing the flue gas temperature such that the water vapour formed during the combustion is condensed out.
This allows a gain of useful heat that otherwise would be lost.

benchmark
COLLECTIVE MARK
THE MARK OF QUALITY FOR THE INSTALLATION, COMMISSIONING AND SERVICING OF DOMESTIC HEATING AND HOT WATER SYSTEMS

Biasi UK Ltd is a licensed member of the Benchmark Scheme which aims to improve the standards of installation and commissioning of domestic heating and hot water systems in the UK and to encourage regular servicing to optimise safety, efficiency and performance.
Benchmark is managed and promoted by the Heating and Hot water Industry Council. For more information visit www.centralheating.co.uk.

DANGER: The indications marked with this symbol must be observed to prevent accidents of mechanical or generic origin (e.g.: Injuries or bruises).

DANGER: The indications marked with this symbol must be observed to prevent accidents of electric origin (electrocution).

DANGER: The indications marked with this symbol must be observed to prevent the risk of fire or explosion.

DANGER: The indications marked with this symbol must be observed to prevent accidents of heat origin (burns).

ATTENTION: The indications marked with this symbol must be observed to prevent malfunctioning and/or damage to materials of the appliance or other objects.

ATTENTION: The indications marked with this symbol is important information that must be carefully read.

Remember that...

✓ **The manual** must be read thoroughly, so that you will be able to use the boiler in a safe and sensible way; must be carefully kept. It may be necessary for reference in the future.
✓ **The lighting up** must be carried out by competent and responsible engineer.
✓ **The manufacturer**
- disclaim all liability for any translations of the present manual from which incorrect interpretation may occur;
- cannot be held responsible for non-observance of instructions contained in this manual or for the consequences of any procedure not specifically described.

Please ensure that the installer has fully completed the Benchmark Checklist on the inside back pages of the installation instructions supplied with the product and that you have signed it to say that you have received a full and clear explanation of its operation. The installer is legally required to complete a commissioning checklist as a means of complying with the appropriate Building Regulations (England and Wales).
All installations must be notified to Local Area Building Control either directly or through a Competent Persons Scheme. A Building Regulations Compliance Certificate will then be issued to the customer who should, on receipt, write the Notification Number on the Benchmark Checklist.
This product should be serviced regularly to optimise its safety, efficiency and performance. The service engineer should complete the relevant Service Record on the Benchmark Checklist after each service.
The Benchmark Checklist will be required in the event of any warranty.

Using the boiler...

✓ **Before lighting the boiler** you are advised to have a Gas Safety Registered Engineer check that the installation of the gas supply
- is gas-tight;
- is of the correct gauge for the flow to the boiler;
- is fitted with all the safety and control devices required by the current Regulations.

✓ **Ensure that**
- Check with the Installer that he has connected and terminated the pressure relief valve in a manner which allows safe discharge. The manufacturers are not responsible for damage caused by opening of the pressure relief valve and consequent escape of water, if this is not connected and terminated.
- The installer has connected the condensate outlet to a suitable drain pipe.

WARNING

- ✓ **On detecting the smell of gas:**
  - don't operate any electrical switches, the telephone or any device that may produce sparks;
  - open the windows and doors at once to create a draught of air which will purge the area;
  - shut off the gas cocks;
  - get the assistance of a qualified person. Emergency telephone number

  Tel. 0800 111999.
- ✓ **Do not touch the appliance** with parts of the body that are wet or damp and/or bare feet.
- ✓ **Do not block or modify** the condensate outlet and pipe work.
- ✓ **In case of structural work** or maintenance near the exhaust duct and/or fume exhaust devices or their attachments, turn off the appliance. On completion of the work, have a professionally qualified person check their efficiency.
- ✓ **Repairs** (under guarantee) must be carried out only by a Biasi an approved engineer, using genuine spare parts. Thus do no more than switching off the boiler yourself (see the instructions).
- ✓ **Your boiler** allows heating up of water to a temperature less than boiling point;
  - must be connected to a central heating system and/or a hot water supply system, compatible with its performance and output;
  - can be used only for those purposes for which it has been specially designed;
  - must not be touched by children or by those unfamiliar with its operation;
  - must not be exposed to weather conditions.
- ✓ **During the operation** it is quite normal that the boiler produces a white plume of condensation vapour from the flue terminal. This is due to the high efficiency of the appliance and may be particularly evident with low outdoor temperatures.

Safe handling of substances

Biasi products are manufactured in accordance with ISO 9001 and do not, and will not, contain any hazardous materials or substances such as asbestos, mercury or C.F.C.'s. The appliance packaging does not contain any substances, which may be considered a hazard to health.
When handling or lifting always use safe techniques.

- Keep your back straight, bend your knees, don't twist.
- Move your feet, avoid bending forwards and side way sand keep the load as close to your body as possible.

Where possible transport the boiler using a sack truck or other suitable trolly.
Always grip the boiler firmly, and before lifting feel where the weight is concentrated to establish the centre of gravity, repositioning yourself as necessary.

Combustion chamber panels
Material: mineral fibres
Known hazards - Some people can suffer reddening and itching of the skin. Fibre entry into the eye will cause foreign body irritation, which can cause severe irritation to people wearing contact lenses. Irritation to respiratory tract.
Precautions - Dust goggles will protect eyes. People with a history of skin complaints may be particularly susceptible to irritation. High dust levels are only likely to arise following harsh abrasion. In general, normal handling and use will not present high risk, follow good hygiene practices, wash hands before, touching eyes, consuming food, drinking or using the toilet.
First aid - Medical attention must be sought following eye contact or prolonged reddening of the skin.

Thermostat / Temperature gauge
Description - Sealed phial and capillary containing liquid.
Known hazards - irritating to skin, eyes and throat. Vapour is harmful. Inflammable -do not extinguish with water.
Precautions - Do not incinerate. Avoid contact with broken/leaking phials. Do not purposely puncture.
First aid - medical attention must be sought following eyes/skin contact, wash with clean water.

Sharp Edges
Caution should be taken when handling the boiler to avoid sharp edges on the boiler.

Boiler installation and commissioning tips

✓ The installation must be carried out by a qualified Gas Safety Registered Engineer who will be responsible for observing the current Regulations and the completion of the Benchmark Gas Boiler System Commissioning Checklist, located at the back of this User manual.

Internally installed mains water meters
Please ensure if the property has had a water meter installed inside the property that it does not include a non-return valve, should you find that it does include a non-return valve then provision of a WRAS approved mini expansion vessel must be made.
Biasi optional WRAS approved easy fit 15 mm mini shock arrestor kit BI9999 999 can be obtained through your local Biasi stockist.

WARNING

Installing the boiler...

- ✓ Do not forget to remove the transit caps and plugs from the boiler connections these are fitted to every boiler.
- ✓ Keep the boiler clear of dust during installation and in particular do not allow any dust or debris to enter the top of the boiler where the flue connection is made. It is recommended that you put a dust sheet over the top of the boiler until you are ready to make the flue connection.
- ✓ Remember to release the auto air purge before filling the boiler. See the instructions to identify the location of this device.
- ✓ This boiler allows to control the flow temperature of the central heating system at very low levels. In case of underfloor heating system a temperature limiting device (e.g. a safety thermostat) is recommended to stop the boiler in case that the water temperature exceeds the design temperature.
- ✓ You are strongly advised to the British Standard BS 7593-2006 Code of practice, flush out the system both cold and hot in order to remove system and installation debris.
- ✓ It is also sensible to initially fire and commission the boiler before connecting any external controls such as a room thermostat. By following this procedure if you have a subsequent problem this method if you have a subsequent problem following the addition of an external control you can eliminate the boiler from your fault analysis.
- ✓ If the boiler is fitted with a digital programmer, when setting the times for automatic operation, remember that for every “ON” time there must be an “OFF” time to follow and that on every occasion you enter a time you must also indicate which days that you want the boiler to follow the timed settings.
- ✓ Some products incorporate an anti cycling time delay. It is normal when first switching the boiler on for the boiler to operate on heating for a few seconds then switch off. After 3 - 4 minutes has elapsed the boiler will then re ignite and operate perfectly normally. The ignition delay cycle does not prevent normal operation of the boiler to provide d.h.w.
- ✓ If you are in any doubts as to the installation or operation of the boiler please read the instruction manuals thoroughly and then if necessary contact Biasi UK for advice and assistance.
- ✓ Guarantee conditions. The guarantee registration form must be returned within 30 of purchase, failure to comply will invalidate the guarantee.

Please remember that if you are in any doubt about the installation of this product you can contact our Technical Help line on tel. 01922 714 600.

Abbreviations used in the manual:
C.h. = Central heating
D.h.w. = Domestic hot water
D.c.w. = Domestic cold wate

TABLE OF CONTENTS

1 APPLIANCE DESCRIPTION 8
1.1 Overview. 8
1.2 Isolation valves 8
1.3 Controls panel 9
1.4 LCD general features 9

2 INSTRUCTIONS FOR USE 12
2.1 Warnings. 12
2.2 Refilling procedure 12
2.3 Ignition 13
2.4 C.h. circuit temperature 14
2.5 D.h.w. temperature 16
2.6 3 star preheating function 16
2.7 Extinguishing 17

3 USEFUL ADVICE. 18
3.1 Central Heating. 18
3.2 Frost protection. 18
3.3 Condensate drain 18
3.4 Periodic maintenance 18
3.5 External cleaning 19
3.6 Operational faults 19
3.7 Displaying in INFO mode 20
3.8 Remote anomaly code 21
3.9 Flue probe 21

4 TECHNICAL INFORMATION. 22
4.1 Overview. 22
4.2 Main diagram 23
4.3 Hydraulic specifications 25
4.4 Expansion vessel 25
4.5 Technical data Advance Plus 25C ERP 26
4.6 Technical data Advance Plus 30C ERP 30
4.7 Technical data Advance Plus 35C ERP 34

5 GENERAL REQUIREMENTS 38
5.1 Related documents. 38
5.2 Location of appliance 38
5.3 Flue system 39
5.4 Gas supply 40
5.5 Air supply 40
5.6 Ventilation 40
5.7 Condensate drain 40
5.8 Water circulation (c.h.) 41
5.9 Domestic water. 42
5.10 Water treatment 42
5.11 Electrical supply 43

6 INSTALLATION 44
6.1 Warnings 44
6.2 Precautions for installation 44
6.3 Installing the bracket. 45
6.4 Overall dimensions 46
6.5 Joints 46
6.6 Mounting the boiler 46
6.7 Fitting the flue system. 47
6.8 Choice of flu 48
6.9 Electric connection 52
6.10 Connecting the room thermostat or zone valves 54
6.11 External frost protection 55
6.12 Installation of the external temperature probe (optional). 55
6.13 Electric connection between the boiler and the external probe. 56
6.14 Remote electric connection (optional) 56
6.15 Example of hydraulic plants with hydraulic separator 56

7 COMMISSIONING 58
7.1 Warnings. 58
7.2 Electrical installation 58
7.3 Gas supply installation 58
7.4 Filling the d.h.w. system 58
7.5 Initial filling of the system 58
7.6 Condensate pipe and traps 60
7.7 Checking the gas supply pressure 61
7.8 Checking the inlet pressure 61
7.9 Lighting the boiler 61
7.10 Enabling functioning of the external temperature probe by the remote control 63
7.11 Setting the K coefficient of the external temperature probe 63
7.12 Setting the pump post-circulation 66
7.13 Selecting the reignition frequency 68
7.14 Checking the ignition device. 69
7.15 Checking the flue system 70
7.16 Checking the condensate drain pipe 70
7.17 Instructing the user. 70
7.18 Adjustment of useful c.h. output 70
7.19 Setting record 72

8 GAS CONVERSION 74
8.1 Warnings. 74
8.2 Operations and gas setting. 74

9 MAINTENANCE. 76
9.1 Warnings. 76
9.2 Dismantling the external panels 76
9.3 Reassembly the external panels 77
9.4 Emptying the d.h.w. system 77
9.5 Emptying the c.h. system 78
9.6 Cleaning the condensing primary exchanger and the burner 78
9.7 Check the pressure of the heating expansion vessel 80
9.8 Cleaning the domestic hot water exchanger . . 80
9.9 Checking the flue expulsion pipe 80
9.10 Combustion analysis check 80
9.11 Checking the condensate drain pipe 81
9.12 Visual inspection of appliance 81
9.13 Checking the gas supply pressure 82
9.14 Water inhibitor concentration 82
9.15 Setting the boiler chimney sweep function 82

10BENCHMARK COMMISSIONING AND SERVICING SECTION 84
Gas boiler system commissioning checklist . . . 85
Service record. 86

Appliance category: II2H3P (gas G20 20 mbar, G31 37 mbar)
Country of destination: United Kingdom (GB) Ireland (IE)
This appliance conforms with the following EEC directive:
Gas Directive 2009/142/CE
Boiler Efficiency Directive 92/42/CEE
Electromagnetic Compatibility Directive 2004/108/CE
Low Voltage Directive 2006/95/CE
The manufacturer, in the continuous process to improve his products, reserves the right to modify the data expressed in the present documentation at any time and without prior notice.
The present documentation is an informative support and it can not be considered as a contract to-wards third parties.

1 APPLIANCE DESCRIPTION

1.1 Overview

The model and serial number of the boiler are printed on bottom right side.

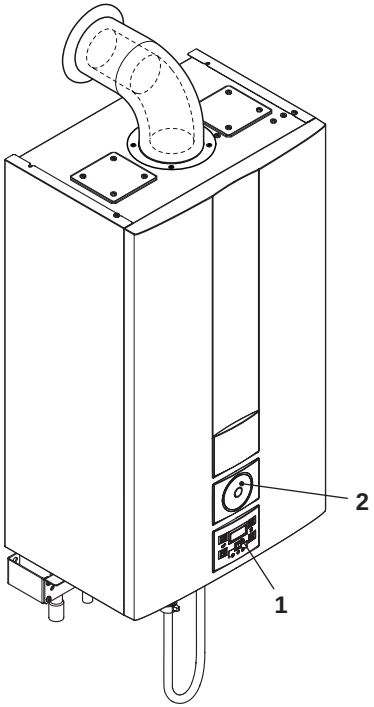

Fig. 1.1

1 Controls panel
2 House for possible time switch (c.h. control)

1.2 Isolation valves

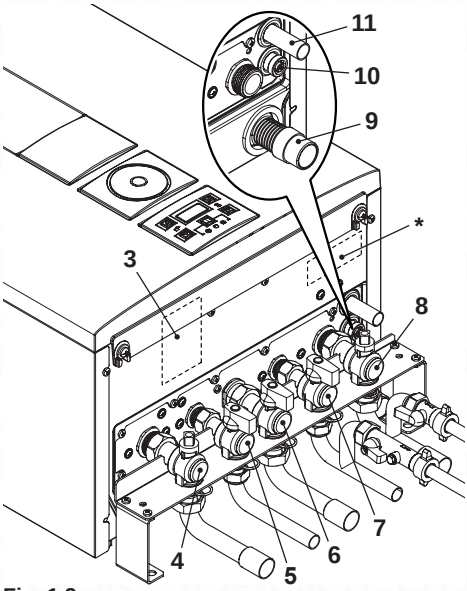

Fig. 1.2

3 Gas supply label
4 C.h. flow valve
5 D.h.w. outlet valve
6 Gas inlet valve
7 D.c.w. inlet valve
8 C.h. return valve
9 Condensate drain pipe
10 Main circuit drain valve
11 C.h. pressure relief valve pipe
***** model and serial number of the boiler label.

USE

1.3 Controls panel

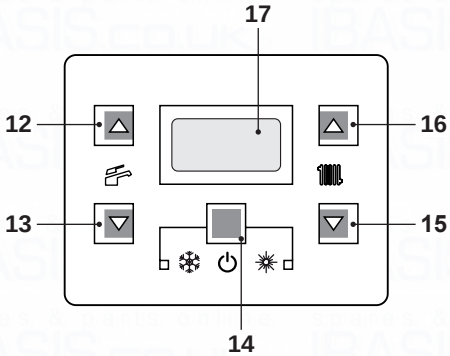

Fig. 1.3

12 D.h.w. temperature increase key
13 D.h.w. temperature reduce key
14 Reset/Stand-by/Winter/Summer key
15 C.h. temperature reduce key
16 C.h. temperature increase key
17 LCD display

RESET that takes all parameters back to the factory value occurs only by setting "parameter 08=04". Reset is displayed by switch on of all symbols present on the display.

1.4 LCD general features

For the boiler technical informations refer to the section "TECHNICAL INFORMATION" to page 22.

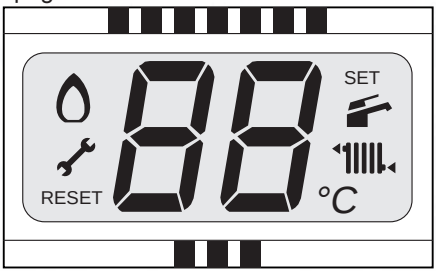

Fig. 1.4

KEY

RESET	The symbol indicates that the boiler can be directly reactivated by the user, by pressing the reset button
	The symbol indicates that the fault requires intervention on behalf of specialised technical assistance
	All symbols represented with lines that surround them, indicate that the symbol is flashing

SIGNAL DISPLAYED BY THE LCD

LCD	FUNCTION
Er 01 + RESET	Lack of burner ignition on safety lockout
Er 02 + RESET	Safety thermostat intervention lockout
Er 03 + RESET	General lockout
Er 04 +	Faulty primary circuit (no water or absence of flow)
Er 05 +	Faulty fan control system
Er 06 +	Faulty c.h. temp. probe NTC
Er 07 +	Faulty d.h.w. temp. probe NTC
Er 08 +	Faulty external temp. probe NTC
Er 09 +	Faulty flue temp. probe NTC
Er 10 + RESET	Flue probe intervention lockout

USE

APPLIANCE DESCRIPTION

LCD	FUNCTION
dn 11	Flame detection error (An flashing + number error flashing
Er 14 + RESET	Faulty pump or primary temperature above 105°C
Er 14 +	Absence of flow from temperature gradient (>2K/s)
Li	Primary circuit temp. limit during d.h.w. operation
- -	Boiler Stand-By, hyphens are turned on in sequence to simulate running /antifreeze protection activated)
68 °C FL °C	Filling request: The boiler works regularly and the display shows all the icons, but the signal FL is flashing every 1 sec.
Er 04	Insufficient pressure: The boiler stops displaying the water lack error.
30 °C	Boiler waiting for heat request
31 °C	Boiler in summer mode (d.h.w.). The primary circuit temperature is displayed.
32 °C	Boiler in winter mode (c.h.+ d.h.w.) The primary circuit temperature is displayed.

LCD	FUNCTION
41 °C	Boiler on demand for d.h.w. power. The d.h.w. temperature is displayed.
34 °C	Boiler on demand for c.h. power.
	Burner ignition (spark)
	Flame present (Burner on)
cF 68	Pre-heating function 3 stars DHW comfort. This information is not displayed. It will be possible to check its state in the section “INFO” value “cF” (the signal “**cF**” is alternated to the CH temperature value until the end of this function). You can enter the function pushing the buttons 12 and 13 together. The function is confirmed showing ON or OFF alternating for 5 sec. This function is always active at every hour (it’s not possible to set the time slots unless a remote control is connected).
cF on	
bP °C 15	Boiler in anti-freeze phase (**bP** flashing + temperature flashing)

APPLIANCE DESCRIPTION

LCD	FUNCTION
AF °C 16	Boiler in antifrost phase (**AF** flashing + temperature flashing)
78	Set c.h. (all other symbols are disabled)
°C	Remote control connected (one flash every 4 sec.)
46	Set d.h.w. (all other symbols are disabled)
Po 35	Pump activated for the post-circulation phase (**Po** flashing + temperature flashing)
uu 56	Delayed burner ignition for setting the system (**uu** flashing + temperature flashing)
65 °C	Maintenance required The wrench symbol is flashing (without showing any error)

LCD	FUNCTION
LP RESET 88	Boiler in chimney sweep in function. The activation of the chimney sweep occurs configuring the "parameter P09=01" and is visualized: LP= minimum dhw hP= minimum heating cP= maximum heating dP= maximum dhw. The transition occurs with keys 16 (increase) and 15 (decrease) dhw temperature. The writing on the display alternates.

USE

spares & parts online IBASIS.CO.UK

USE

2 INSTRUCTIONS FOR USE

2.1 Warnings

Biasi UK Ltd support the Benchmark initiative. The Benchmark Checklist is located at the back of this manual and should be completed by the Installing/ Commissioning Engineer and handed over to the User for future reference by other visiting Engineers.
Also included is the Service Interval Record card that should be completed by the Service Engineer following the annual service maintenance of the boiler and system.
All Gas Safe Registered Installers carry a Gas Safe ID card, and have a registration number. Both should be recorded in your Benchmark Checklist. You can check your Installer is registered by calling Gas Safe direct on 0800 408 5500, or go on line at www.GasSafeRegister.co.uk.

In order to guarantee safety and correct operation, it is essential that all the tests are carried out by a competent and responsible service engineer before lighting up the boiler.
The tests are described in the installation instructions in section 7 commissioning.
Ensure that the c.h. circuit is regularly filled with water (even if the boiler is only used for d.h.w. supply).
In order to activate, press keys 14 and 16 together to access the "INFO" menu. The display displays the value "**d0**" that alternates with the pressure value "**13**" (1,3 bar). The number indicating the pressure, is displayed without decimal points while the letter indicates the unit of measure (bar) Fig. 2.2.
If the pressure reading on the pressure gauge is below that shown in Fig. 2.2, then the system will require topping up. A filling loop is normally provided by the Installer for this purpose.

If you are in any doubt regarding this procedure you are advised to contact your Installer or an Approved Engineer.

This appliance is provided with a built in anti-freeze system that operates the boiler when the temperature is below 5 °C.
Therefore, when the boiler is not lit or used in cold weather, with consequent risk of freezing do not switch off the boiler at the fused spur isolation switch or close the gas inlet cock.
When you do not expect to use the boiler for a long period and the boiler is not to be used for frost protection then follow the instructions given in section "Extinguishing" to page 17.

2.2 Refilling procedure

- Isolate the boiler from the electrical supply at the fused spur. Reconnect the filling loop as demonstrated in Fig. 2.1.

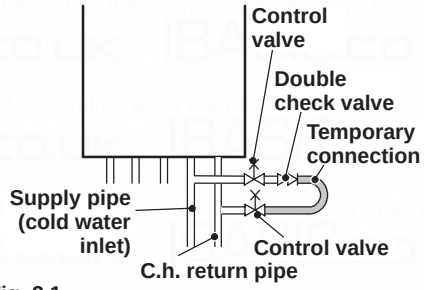

Fig. 2.1

- Open the valves of the filling loop and watch the display until it reaches normal filling pressure as shown in Fig. 2.2.

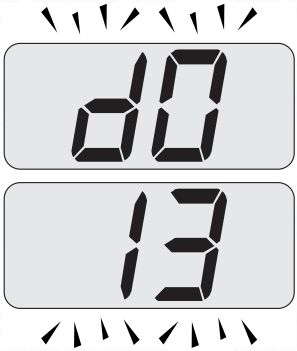

Fig. 2.2

If you experience any difficulty with the operation of the boiler, switch off the boiler immediately at the fused spur isolation switch and contact your Installer or an approved Service Engineer.

Air introduced into the boiler during this filling process will vent through the automatic air purger fitted to the boiler. You may also find it necessary to vent air from your radiator circuit using your radiator key, however be aware that excessive venting will cause the pressure in the system to drop.
Always ensure that the pressure gauge is set at the required pressure.

2.3 Ignition

- Check that the valves located in the lower part of the boiler are open Fig. 2.3.

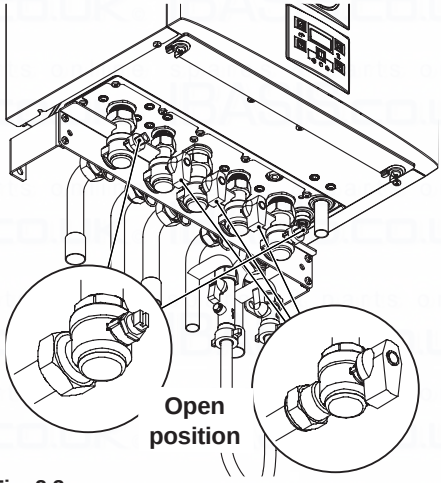

Fig. 2.3

- Turn on the electricity supply to the boiler, switching on the fused spur isolation switch. The LCD display displays the state within which the boiler is found (last memorised) Fig. 2.4.

Stand-by

Winter

Summer

Fig. 2.4

C.h. / D.h.w. functioning

- Press the key 14 for 2 seconds until both and symbols appear on the display Fig. 2.5.

USE

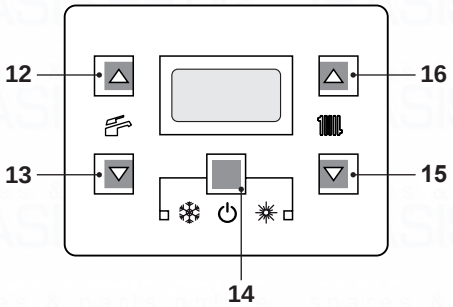

Fig. 2.5

The LCD display displays the boiler temperature (primary circuit) and the and symbols; the °C symbol slowly flashes Fig. 2.6.

Fig. 2.6

Hot water production functioning only

- Press the key 14 for 2 seconds until the symbol appears on the display Fig. 2.7.

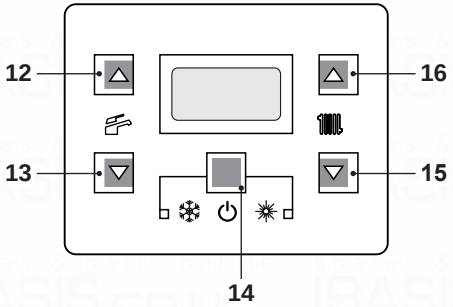

Fig. 2.7

The LCD display displays the boiler temperature (primary circuit) and the symbol; the °C symbol slowly flashes Fig. 2.8.

Fig. 2.8

2.4 C.h. circuit temperature

The output temperature of c.h. water can be adjusted by acting on keys 15 (reduce) and 16 (increase) (Fig. 2.7) from a minimum of about 25°C to a maximum of about 85°C. Press one of the two keys once to display the "set" value. Press again to access the modification.

Signal given by the LCD display:

- The heating hot water flow "set" temperature and the symbol flash. The background of the display is illuminated (Fig. 2.9).

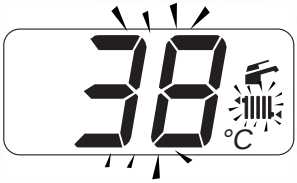

Fig. 2.9

Adjustment of temperature WITHOUT the external temperature probe (optional) fitted

Adjust the c.h. water flow as follows:

- from 25 to 35 with an external temperature included between 5 and 15°C
- from 35 to 60 with an external temperature included between -5 and +5°C
- from 60 to 85 with an external temperature less than -5°C.

Your qualified installer can recommend the most indicated adjustments for Your system.

The control of the set temperature reached can be seen on the LCD display by means

USE

of the missing symbol .

Power request in c.h. power.
When the boiler has a power request in the c.h. mode, the symbol is displayed on the display followed by an increase of the c.h. water flow temperature. The symbol flashes (Fig. 2.10).

Fig. 2.10

Adjusting the c.h. temperature with the external temp. probe installed
When the external temp. probe (optional) is installed your boiler automatically adjusts the temperature of the c.h. system water flow in relation to the external temperature.
In this case the boiler must be set by a qualified installer (see "Setting the K coefficient of the external temperature probe" to page 63).
However, if the ambient temperature is not comfortable, the flow temperature of the heating plant can be increased or reduced by ± 15°C by acting on keys 15 (reduce) and 16 (increase) (Fig. 2.7).

Timed manual heating function
This function allows to manually activate-deactivate the central heating operation for a fixed period of 24 hours.

Activation for 24 hours:
Pressing keys 15 and 16 (Fig. 2.11) at the same time for 2 seconds until the letters "**th**" appear on the LCD display which alternates with the word "**on**" (Fig. 2.12).

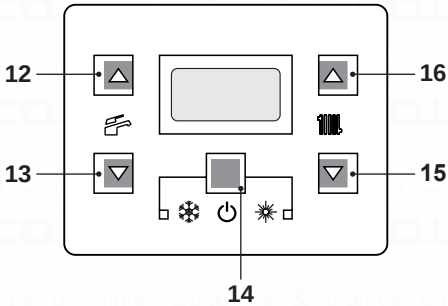

Fig. 2.11

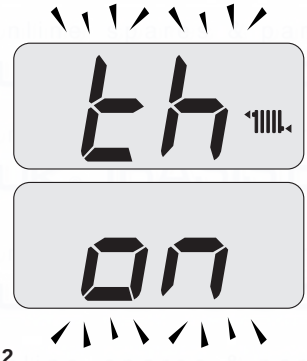

Fig. 2.12

Following, the LCD display shows the main circuit temperature which alternates with the word "**th**". The symbol flash Fig. 2.13.

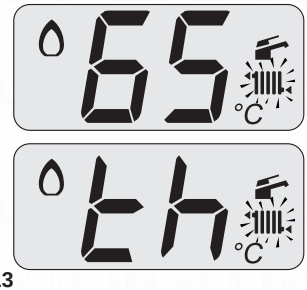

Fig. 2.13

Deactivation/End of function:
The function will end when the time set passes or when the function status is set to "**oF**".
Hold down keys 15 and 16 (Fig. 2.14).

USE

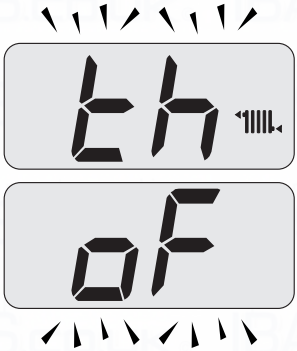

Fig. 2.14

USE

2.5 D.h.w. temperature

The temperature of the d.h.w. can be adjusted by acting on keys 12 (increase) and 13 (reduce) (Fig. 2.7) from a minimum of about 35°C to a maximum of about 60°C. Press one of the two keys once to display the "set" value. Press again to access the modification.

Signal given by the LCD display:

- the "set" value of the d.h.w. and the symbol flash. The background of the display is illuminated. (Fig. 2.9).

Fig. 2.15

Adjustment

Adjust the d.h.w. temperature to a value suited to your needs.

Reduce the necessity of mixing hot water with cold water.

In this way, the automatic adjustment features will be appreciated.

If water hardness is particularly high, we recommend that the boiler be adjusted to a temperature less than 50°C.

In these cases we recommend however that a softener is installed on the d.h.w. system.

D.h.w. request

When the boiler has a power request in the d.h.w. mode, the symbol is displayed on the display followed by an increase of the heating water flow temperature. The symbol flashes (Fig. 2.16).

Fig. 2.16

2.6 3 star preheating function

This function diminishes consumption of the domestic water supply at the time of withdrawal, preparing the boiler temperature at the requested temperature.

To activate the 3 star preheating function press keys 12 and 13 together (Fig. 2.18) until the letters "**cF**" appear on the LCD display which alternates with the word "**on**" (Fig. 2.17).

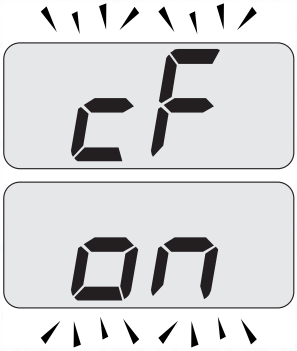

Fig. 2.17

NOTE: Should the power to the boiler fail, wait at least one minute before reactivating the function upon reactivation.

To disable the 3 star preheating function press keys 12 and 13 together (Fig. 2.18) until the letters "**cF**" appear on the LCD dis-

play which alternates with the word "**oF**".

Note to the installer.
3 Star DHW comfort setting
This boiler is equipped with advanced software that facilitates an enhanced domestic hot water delivery system; this system reduces the waiting time at the hot water draw off points to a minimum and also ensures limited water wastage.
Please ensure if you decide to activate the built in 3 star comfort function that the first DHW draw off point is at a sufficient distance to avoid excessively hot water being delivered to the draw off point.

2.7 Extinguishing

Press the key for 2 seconds 14 (Fig. 2.18) until the symbol appears on the display (Fig. 2.19).

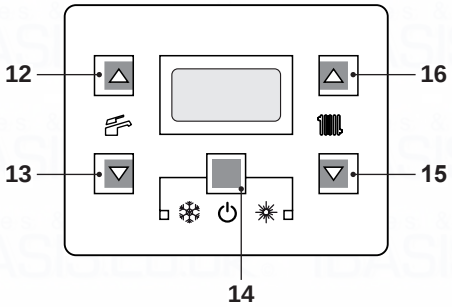

Fig. 2.18

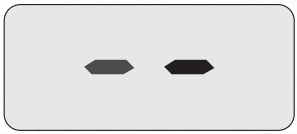

Fig. 2.19

If a long period of inactivity is envisioned:
- Switch off the electricity supply to the boiler, by means of the fused spur isolation switch;
- Shut off the gas supply cock and the valves for the water circuits fitted under the boiler Fig. 2.20;

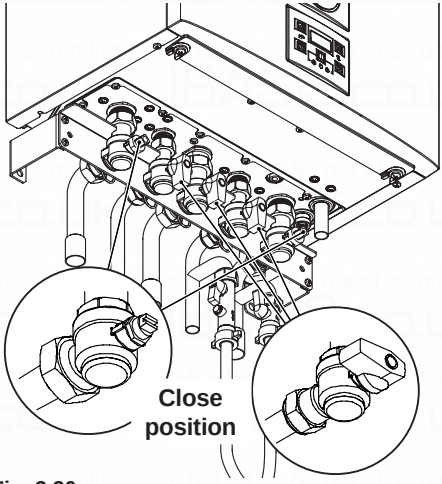

Fig. 2.20

- If necessary, empty the hydraulic circuits see section "Emptying the d.h.w. system" to page 77 and section "Emptying the c.h. system" to page 78.

USE

USE

3 USEFUL ADVICE

3.1 Central Heating

For reasonably economical service install a room thermostat. Never shut off the radiator in the area where the room thermostat is installed.
If a radiator (or a convector) does not heat up, check that no air is present in it and that its valve is open. If the ambient temperature is too high, do not alter the radiator valves. Reduce the central heating temperature instead by means of the room thermostat or by acting on the 15 and 16 heating adjustment keys (Fig. 3.1).

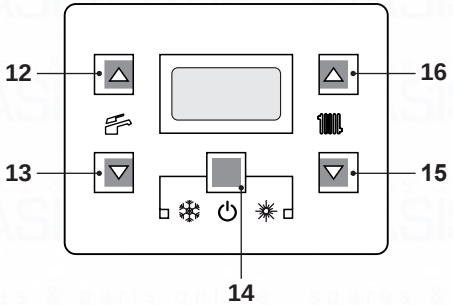

Fig. 3.1

3.2 Frost protection

The anti-freeze system and any additional protections protect the boiler from possible damage due to frost.
This system does not guarantee protection of the entire hydraulic system.
If the external temperature can reach values lower than 0°C, it is recommended that the entire system is activated adjusting the room thermostat at a low temperature.
The anti-freeze function is also activated with the boiler in stand-by (Fig. 3.2).

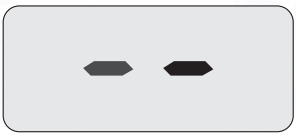

Fig. 3.2

Therefore, when the boiler is not lit and used in cold weather, with consequent risk of freezing do not switch off the boiler at the fused spur isolation switch or close the gas inlet cock.
If the boiler is deactivated, have a qualified technician empty the boiler (heating and domestic hot water circuit), the c.h. system and the d.h.w. system.

3.3 Condensate drain

The condensate drain must not be modified or blocked. Blockage of the condensate drain, caused by debris or freezing, can cause automatic shutdown of the boiler.
If freezing is suspected and the pipe run is accessible an attempt may be made to free the obstruction by pouring hot water over the exposed pipe an cleaning any blockage from the end of the pipe.
If this fails to remedy the problem the assistance of a Gas Safe registered installer or in IE a competent person should be sought.

3.4 Periodic maintenance

For efficient and continuous operation of the boiler, it is advisable to arrange maintenance and cleaning by an Authorised Service Centre Engineer, at least once a year.
During the service, the most important components of the boiler will be inspected and cleaned. This service can be part of a maintenance contract. In particular, you are advised to have the following checks carried out:

- domestic hot water heat exchanger;
- condensing heat exchanger;
- burner;
- exhaust fume duct and flue;
- pressurisation of the expansion tank;
- filling up of the central heating circuit;
- bleeding of air from the central heating system;
- general check of the appliance's operation.

3.5 External cleaning

Before carrying out any cleaning, disconnect the appliance from the electrical mains, using the fused spur isolation switch fitted adjacent to the appliance.

To clean the external panels, use a cloth soaked in soapy water. Do not use solvents, abrasive powders or sponges.
Do not carry out cleaning of the appliance and/or its parts with readily flammable substances (for example petrol, alcohols, naphtha, etc.).

3.6 Operational faults

If the boiler does not function and a code that alternates between the letter **Er** and the writing **RESET** (see "LCD general features" to page 9) appear on the LCD display, it indicates that the safety lock-out has stopped the boiler. The display background flashes (Fig. 3.3).

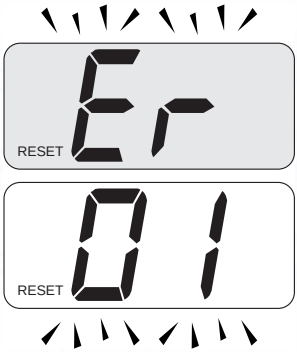

Fig. 3.3

For the first lighting up and following maintenance procedures for the gas supply, it may be necessary to repeat the resetting operation several times so as to remove the air present in the pipe work.
Safety lock-out may occur even in case of a blockage of the condensate drainage (e.g. plugged drain pipe). It is advisable to check the condensate drainage pipe and traps for cleanness.
Press the reset key on the boiler control panel 14 (Fig. 3.1) to reset its functioning.

In this case and in case of persistent lock-out call a competent and responsible Service Engineer.

Other operational faults signalled on the LCD display

If the LCD display displays a code that alternates between the letter **Er** and the symbol, the boiler has an anomaly that cannot be reset.
The display background flashes (Fig. 3.4).

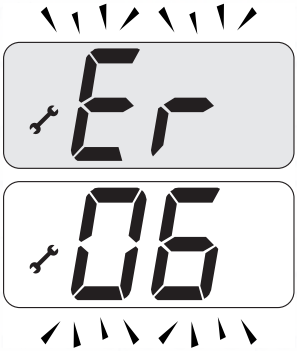

Fig. 3.4

Another possible signal occurs when the d.h.w. exchanger cannot exchange all of the power supplied by the boiler.
E.g.: d.h.w. exchanger clogged with lime scale. This happens only when the boiler has a request for d.h.w..
Code **01** appears on the LCD display that alternates with the letter **Li**. The display background flashes (Fig. 3.5).

USE

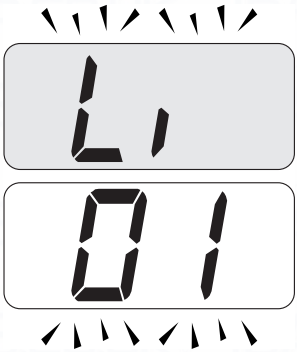

Fig. 3.5

In order to reset good functioning of the boiler, call a competent and responsible Service Engineer.

Noise due to air bubbles are heard during operation

You should check that the pressure on the pressure gauge is not below the correct setting.
If required, top up the system correctly, as described in the section "Refilling procedure" to page 12 of this manual. Bleed any air present in the radiators, if necessary.

The pressure has gone down

It is necessary to top up the appliance with water again, so as to raise the pressure to an adequate level as described in the section "Refilling procedure" to page 12 of this manual. If topping up with water has to be done very frequently, have the system checked for leaks.

Water comes out of the pressure relief valve

Check on the pressure gauge that the pressure in the central heating circuit is not close to 3 bars. In this case, temperature rise in the circuit can cause the pressure relief valve to open. So that this does not happen and to decrease the pressure to a normal value, it is advisable to vent some of the water in the appliance through the bleed valves present in the radiators.

Reduced domestic hot water temperature

The likely causes may be impurities caught in the domestic hot water flow switch filter or limescale deposited in the domestic hot water heat exchanger. It is advisable to have the appliance cleaned out by an Authorised Service Centre Engineer.

Water should occasionally leak from the boiler

Shut off the valves positioned under the boiler to page 17 and call an Authorised Service Centre Engineer.

In this case or in case of problems other than those mentioned here, switch off the boiler, as described in section "Extinguishing" to page 17 and call a competent and responsible Service Engineer.

3.7 Displaying in INFO mode

The INFO mode allows the display of some information on the boiler functioning status. In case of malfunctioning of the boiler, it may be useful to communicate such information to the Authorised Service Centre Engineer so that the causes can be understood.

In order to access the INFO mode, press keys 14 and 16 (Fig. 3.6) at the same time until the letter **di** appears on the display that alternates with a code (Fig. 3.7).

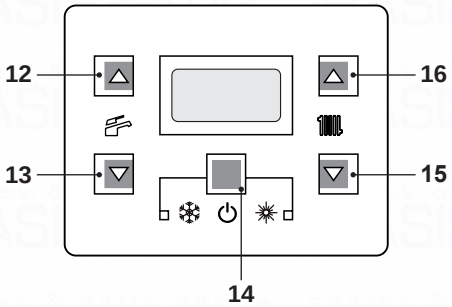

Fig. 3.6

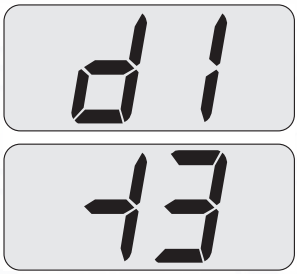

Fig. 3.7

To scroll the values press 15 (reduce) and 16 (increase). keys. In order to exit the INFO mode, hold keys 14 and 16(Fig. 3.6) pressed at the same time.

3.8 Remote anomaly code

If the boiler is connected to remote (optional), a code that indicates a boiler anomaly is displayed in the centre of the display.
The anomaly in progress is indicated by a numeric code followed by the letter **E**.
The table summarises the possible codes displayed on the remote.

Anomaly	Code
Lack of burner ignition	01E
Safety thermostat lockout	02E
General lockout	03E
Faulty primary circuit (no water or absence flow)	04E
Faulty fan control system	05E
Faulty c.h. temp. probe NTC	06E
Faulty d.h.w. temp. probe NTC	07E
Faulty external temp. probe NTC	08E
Faulty flue temp. probe NTC	09E
Flue probe intervention lockout	10E
Flame detection error	11E
No circulation, of faulty pump or intervention primary temperature limit.	14E

3.9 Flue probe

The flue probe 19 and safety thermal fuse 20 indicated in Fig. 3.8 are a safety device. The flue probe 19 intervenes when the flue temperature exceeds 110°C placing the boiler in safety block switching it off.
To reset normal boiler functioning, just press the 14 (Fig. 3.6) key.

If flue probe 19 does not intervene and, therefore does not send the boiler into security lockout, thermofusible 20 enters into function as a further safety measure.
This component sends the boiler into security lockout when the flue temperature reaches 167°C.

To restore the normal operation of the boiler, contact the Authorized Service Centre.

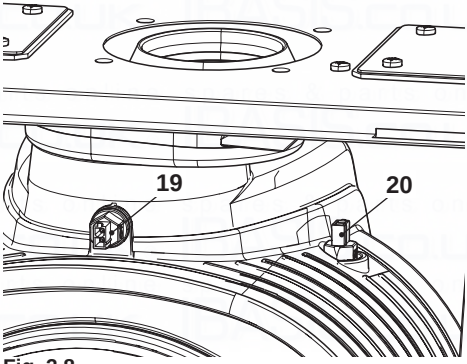

Fig. 3.8

USE

4 TECHNICAL INFORMATION

4.1 Overview

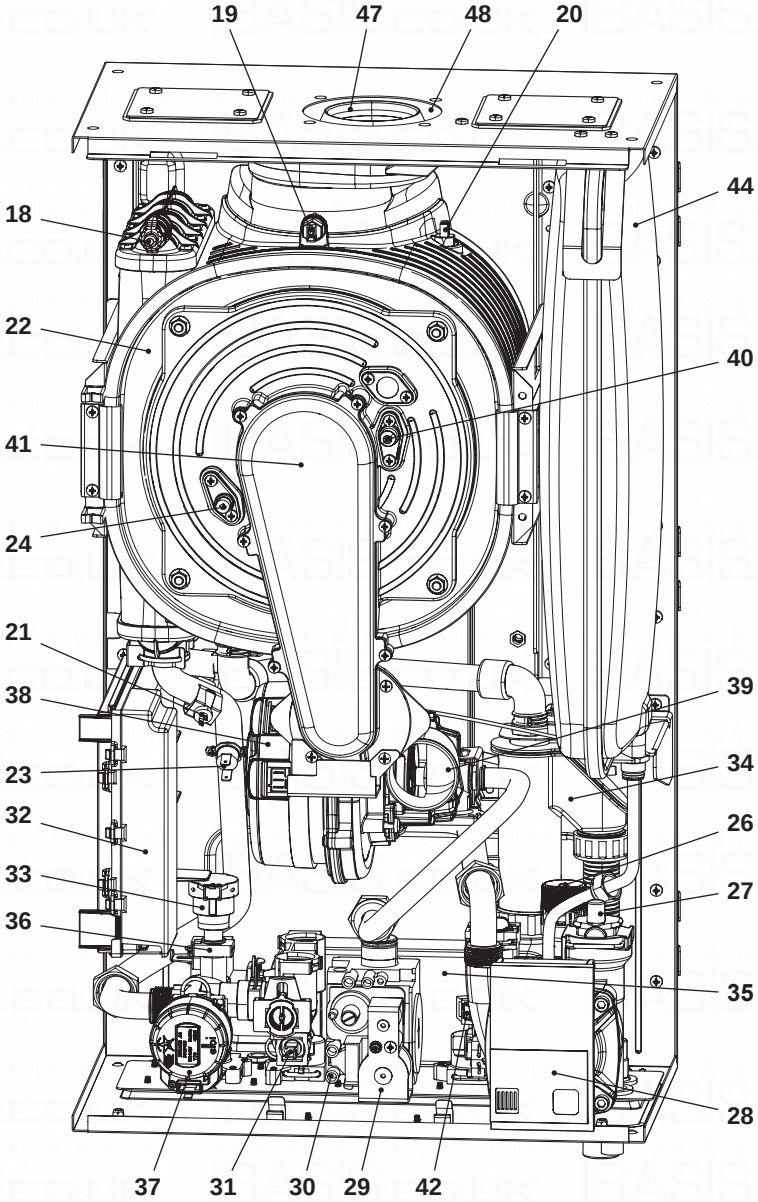

Fig. 4.1

4.2 Main diagram

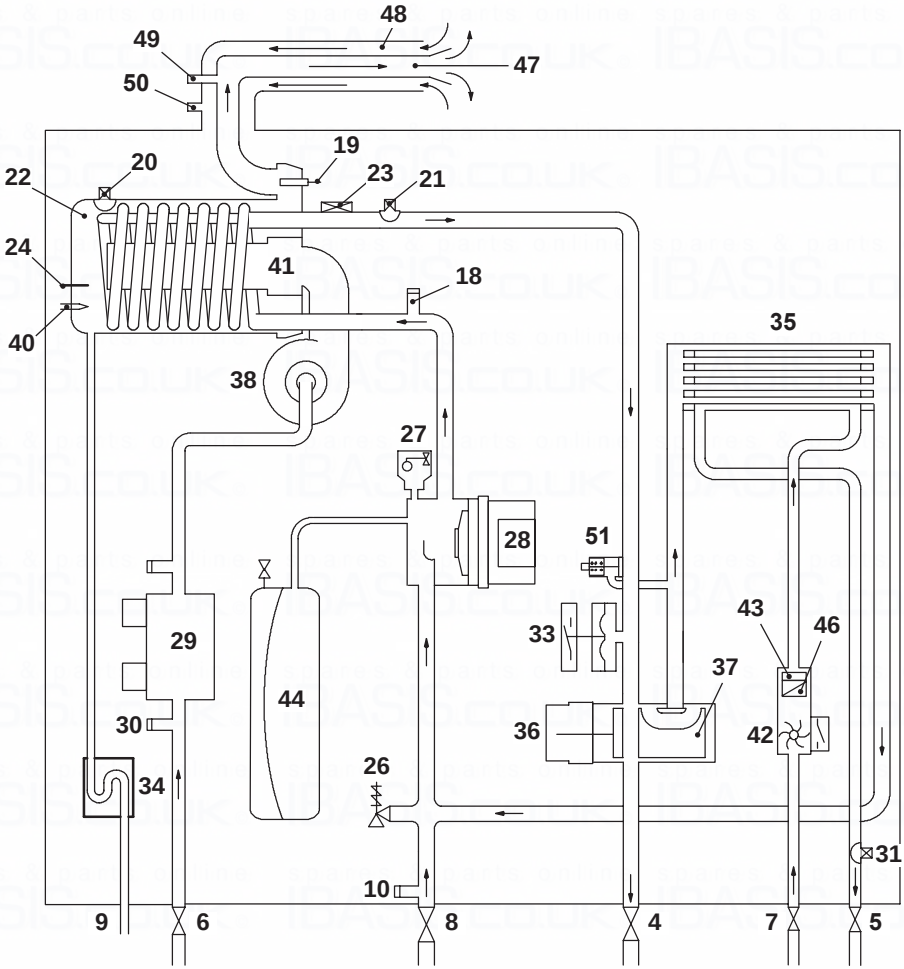

Fig. 4.2

4 C.h. flow valve
5 D.h.w. outlet valve
6 Gas inlet valve
7 D.c.w. inlet valve
8 C.h. return valve
9 Condensate drain pipe
10 Main circuit drain valve
18 Condensing heat exchanger air purger valve
19 Flue temperature probe NTC
20 Safety thermal fuse
21 C.h. temperature probe NTC
22 Condensing heat exchanger
23 Safety thermostat
24 Flame-detecting electrode
25 Air manifold
26 C.h. pressure relief valve
27 Automatic air purger valve

28 Pump
29 Gas valve
30 Gas valve inlet test point
31 D.h.w. temperature probe NTC
32 Control box containing:
External temperature probe terminal block, remote terminal block, d.h.w tank terminal block, power supply terminal block, external controls terminal block
33 Primary circuit pressure switch
34 Condensate trap
35 D.h.w. heat exchanger
36 Three-way diverter valve
37 Three-way electric actuator valve
38 Fan
39 Air box (air/gas mixer)
40 Ignition electrode
41 Burner
42 Domestic hot water flow switch
43 Domestic hot water flow limiter (optional)
44 C.H. expansion tank
45 By-pass valve
46 Domestic water circuit filter
47 Flue outlet pipe
48 Air intake pipe
49 Flue exhaust sampling point
50 Air sampling point
51 By-pass valve

4.3 Hydraulic specifications

The hydraulic specifications represents the pressure (available head for the central heating system) as a function of the flow rate.

Model **Advance Plus 25C ERP**

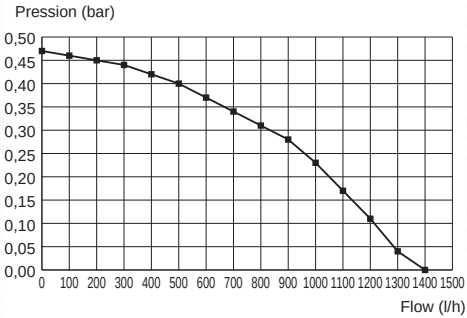

Fig. 4.3

Models **Advance Plus 30C ERP - Advance Plus 35C ERP**

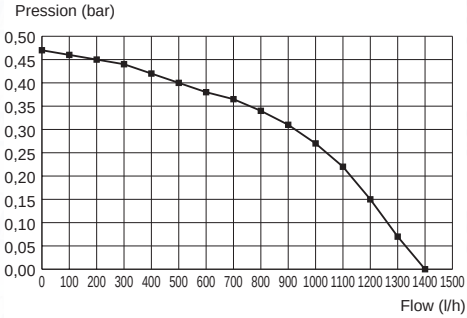

Fig. 4.4

The boiler load loss has already been removed.

Flow rate with closed thermostatic valves

The boiler is equipped with an automatic by-pass, which protects the condensing primary exchanger.
In case of excessive reduction or total stopping of water circulation in the heating plant due to the closing of thermostatic valves or circuit elements valves, by-pass ensures a minimum water circulation inside the condensing primary exchanger.
The by-pass is calibrated to a differential pressure of about 0.3-0.4 bar.

4.4 Expansion vessel

Note: this boiler is designed for operation only in a sealed central heating system.

The height difference between the pressure relief valve and the highest point in the system may be 10 m at most.
For greater differences, increase the pre-load pressure in the expansion vessel and the system, when cold, by 0.1 bar for each additional 1 m.

Total capacity	l	7,0
Pre-load pressure	kPa	100
	bar	1,0
Useful capacity	l	3,5
Maximum volume of water in the system *	l	109

Fig. 4.5

* Where conditions are:
- Average maximum temperature of the system is 85 °C
- Initial temperature when filling up the system is 10 °C

For systems with volumes greater then the one indicated in the above table, an additional expansion vessel must be provided.

INSTALLATION

4.5 Technical data Advance Plus 25C ERP

Heat input		
Nominal net [A] central heating	kW	20,0
	BTU/h	68243
Nominal net [A] domestic hot water	kW	25,0
	BTU/h	85304
Nominal gross [B] central heating	kW	22,2
	BTU/h	75750
Nominal gross [B] domestic hot water	kW	27,8
	BTU/h	94687
Minimun net [A] ch - dhw	kW	6,0
	BTU/h	20473
Minimun gross [B] ch - dhw	kW	6,7
	BTU/h	22725

Useful output		
Maximun (central heating)	kW	19,5
	BTU/h	66468
Maximun (domestic hot water)	kW	24,4
	BTU/h	83086
Minimun (ch - dhw)	kW	5,9
	BTU/h	19981
Maximun condensing (central heating)	kW	21,2
	BTU/h	72337
Maximun condensing (domestic hot water)	kW	26,6
	BTU/h	90763
Minimun condensing (ch - dhw)	kW	6,5
	BTU/h	22029

Central heating		
Min/Max flow temperature settings*	°C	25 - 85
Maximum pressure	kPa	250
	bar	2,5
Minimum pressure	kPa	30
	bar	0,3
Available head (in 1000 l/h)	kPa	23,0
	bar	0,23
Seasonal efficency G20 [c]	%	88,7
Seasonal efficency G31 [c]	%	89,7

* to the minimum useful output

[A] referred to the net calorific value at 15 °C and 1013,25 mbar: G20 = 34,02 MJ/m^3 - G31 = 46,34 MJ/kg

[B] referred to the gross calorific value at 15 °C and 1013,25 mbar: G20 = 37,78 MJ/m^3 - G31 = 50,37 MJ/kg

[C] The value is used in the UK Government's Standard Assessment Procedure (SAP) for energy rating of dwellings. The test data from which it has been calculated have been certified by a notified body.

[D] Values subject to tolerance

Domestic hot water		
Min/Max temperature settings	°C	35 - 55
Maximum pressure	kPa	1000
	bar	10
Minimum pressure	kPa	30
	bar	0,3
Flow rate minimun	l/min	2,5
Flow rate 30° rise [D]	l/min	13,3
Flow rate 35° rise [D]	l/min	11,4
Flow rate 40° rise [D]	l/min	9,9

TECHNICAL INFORMATION

Gas supply pressures			
Gas		Pa	mbar
Natural G20	**Nom**	2000	20
	Min	1700	17
	Max	2500	25
Propane G31	**Nom**	3000	30
	Min	2000	20
	Max	3500	35

Gas rate maximum - central heating		
Natural G20	m^3/h	2,15
Propane G31	kg/h	1,55
Gas rate maximum - domestic hot water		
Natural G20	m^3/h	2,67
Propane G31	kg/h	1,94
Gas rate minimum - ch dhw		
Natural G20	m^3/h	0,65
Propane G31	kg/h	0,47

Gas restrictors references		Ø mm /100
Natural G20		565
Propane G31		430
Air/gas mixer restrictors		
Natural G20	Fuch-sia	Fucsia
Propane G31	Fuch-sia	Fucsia

Electrical data		
Voltage	V~	230
Frequency	Hz	50
Nominal Power consumption	W	95
Minimum Power consumption	W	57
Stand-by Power consumption	W	5
Protection degree		IPX5D
External fuse rating	A	3
Internal fuse rating	A	N° 2 - 2 AF

Flue design		
Boiler type B23P C13 C33 C43 C53 C63 C83		
ø Coaxial	mm	60/100
ø Twin split pipes	mm	80/80
ø Roof	mm	80/125
Nominal heat flow rate (A) (E)	kW	25,0
Exhaust temperature (E)	°C	76,0
Mass flow rate (E)	kg/s	0,0089

Flue gas figures		
Nominal heat input (A) (E)	kW	25,0
CO_2 content with gas G20	%	9,3 - 9,9
O_2 content with gas G20	%	3,9
CO content with gas G20	ppm	139,0
Exhaust temperature (E)	°C	76,0
NOx class		5
Weighted NOx	ppm	17

(E) *Values refer tests with a 1 m flue working at the nominal heat input*

INSTALLATION

CO_2 contents - central heating		
Nominal heat input (A) (E)	kW	20,0
CO_2 content with gas G20 (range min - max)	%	9,2 - 9,8
CO_2 content with gas G31 (range min - max)	%	9,9 - 10,8
Minimum heat input (A) (E)	kW	6,0
CO_2 content with gas G20 (range min - max)	%	8,7 - 9,3
CO_2 content with gas G31 (range min - max)	%	9,4- 10,4

CO_2 contents - domestic hot water		
Nominal heat input (A) (E)	kW	25,0
CO_2 content with gas G20 (range min - max)	%	9,3 - 9,9
CO_2 content with gas G31 (range min - max)	%	10,0 - 10,9
Minimum heat input (A) (E)	kW	6,0
CO_2 content with gas G20 (range min - max)	%	8,7 - 9,3
CO_2 content with gas G31 (range min - max)	%	9,4- 10,4

Other specifications		
Height	mm	700
Width	mm	400
Depth	mm	290
Weight (dry)	kg	33,0
Water volume in the boiler (up to 1 bar)	l (kg)	2,0

TECHNICAL INFORMATION

Model(s):			**Advance Plus 25C ERP**
Condensing boiler:			Yes
Low-temperature boiler (**):			No
B1 boiler:			No
Cogeneration space heater:	No	If yes, equipped with a supplementary heater:	-
Combination heater:			Yes

Item	Symbol	Value	Unit	Item	Symbol	Value	Unit
Rated heat output	**P_{rated}**	**20**	**kW**	**Seasonal space heating energy efficiency**	**η_s**	**92**	**%**
For boiler space heaters and boiler combination heaters: Useful heat output				For boiler space heaters and boiler combination heaters: Useful efficiency			
At rated heat output and high-temperature regime (*)	P_4	19,5	kW	At rated heat output and high-temperature regime (*)	η_4	88,2	%
At 30% of rated heat output and low-temperature regime (**)	P_1	6,5	kW	At 30% of rated heat output and low-temperature regime (**)	η_1	97,0	%
Auxiliary electricity consumption				Other items			
At full load	elmax	0,086	kW	Standby heat loss	P_{stby}	0,078	kW
At part load	elmin	0,009	kW	Ignition burner power consumption	P_{ign}	-	kW
In standby mode	P_{SB}	0,005	kW	Annual energy consumption	Q_{HE}	39,656	GJ
				Sound power level, indoors	L_{WA}	52	dB
				Emission of nitrogen oxides	NO_x	30	mg/kWh

For combination heaters:

Declared load profile	XL			**Water heating energy efficiency**	η_{wh}	86	%
Daily electricity consumption	Q_{elec}	0,169	kWh	Daily fuel consumption	Q_{fuel}	22,462	kWh
Annual electricity consumption	AEC	37	kWh	Annual fuel consumption	AFC	17	GJ
Contact details	See manual cover						

(*) High-temperature regime means 60°C return temperature at heater inlet and 80°C feed temperature at heater outlet.

(**) Low temperature means for condensing boilers 30°C, for low-temperature boilers 37°C and for other heaters 50°C return temperature (at heater inlet).

4.6 Technical data Advance Plus 30C ERP

Heat input		
Nominal net (A) central heating	kW	25,0
	BTU/h	85304
Nominal net (A) domestic hot water	kW	30,0
	BTU/h	102364
Nominal gross (B) central heating	kW	27,8
	BTU/h	94687
Nominal gross (B) domestic hot water	kW	33,3
	BTU/h	113624
Minimun net (A) ch - dhw	kW	8,5
	BTU/h	29003
Minimun gross (B) ch - dhw	kW	9,4
	BTU/h	32194

Useful output		
Maximun (central heating)	kW	24,4
	BTU/h	83256
Maximun (domestic hot water)	kW	29,2
	BTU/h	99634
Minimun (ch - dhw)	kW	8,3
	BTU/h	28321
Maximun condensing (central heating)	kW	26,6
	BTU/h	90763
Maximun condensing (domestic hot water)	kW	31,9
	BTU/h	108847
Minimun condensing (ch - dhw)	kW	9,2
	BTU/h	31392

Central heating		
Min/Max flow temperature settings*	°C	25 - 85
Maximum pressure	kPa	250
	bar	2,5
Minimum pressure	kPa	30
	bar	0,3
Available head (in 1000 l/h)	kPa	27,0
	bar	0,27
Seasonal efficency G20 (C)	%	88,7
Seasonal efficency G31 (C)	%	89,7

* to the minimum useful output

(A) referred to the net calorific value at 15 °C and 1013,25 mbar: G20 = 34,02 MJ/m^3 - G31 = 46,34 MJ/kg

(B) referred to the gross calorific value at 15 °C and 1013,25 mbar: G20 = 37,78 MJ/m^3 - G31 = 50,37 MJ/kg

(C) The value is used in the UK Government's Standard Assessment Procedure (SAP) for energy rating of dwellings. The test data from which it has been calculated have been certified by a notified body.

(D) Values subject to tolerance

Domestic hot water		
Min/Max temperature settings	°C	35 - 55
Maximum pressure	kPa	1000
	bar	10
Minimum pressure	kPa	30
	bar	0,3
Flow rate minimun	l/min	2,5
Flow rate 30° rise (D)	l/min	16,2
Flow rate 35° rise (D)	l/min	13,5
Flow rate 40° rise (D)	l/min	11,7

TECHNICAL INFORMATION

Gas supply pressures			
Gas		Pa	mbar
Natural G20	**Nom**	2000	20
	Min	1700	17
	Max	2500	25
Propane G31	**Nom**	3000	30
	Min	2000	20
	Max	3500	35

Gas rate maximum - central heating		
Natural G20	m^3/h	2,65
Propane G31	kg/h	1,94
Gas rate maximum - domestic hot water		
Natural G20	m^3/h	3,18
Propane G31	kg/h	2,33
Gas rate minimum - ch dhw		
Natural G20	m^3/h	0,90
Propane G31	kg/h	0,66

Gas restrictors references		Ø mm /100
Natural G20		690
Propane G31		505
Air/gas mixer restrictors		
Natural G20	Blue	Blu
Propane G31	Blue	Blu

Electrical data		
Voltage	V~	230
Frequency	Hz	50
Nominal Power consumption	W	104
Minimum Power consumption	W	57
Stand-by Power consumption	W	5
Protection degree		IPX5D
External fuse rating	A	3
Internal fuse rating	A	N° 2 - 2 AF

Flue design		
Boiler type		
B23P C13 C33 C43 C53 C63 C83		
ø Coaxial	mm	60/100
ø Twin split pipes	mm	80/80
ø Roof	mm	80/125
Nominal heat flow rate (A) (E)	kW	30,0
Exhaust temperature (E)	°C	74,0
Mass flow rate (E)	kg/s	0,0111

Flue gas figures		
Nominal heat input (A) (E)	kW	30,0
CO_2 content with gas G20	%	9,2 - 9,8
O_2 content with gas G20	%	3,9
CO content with gas G20	ppm	75,0
Exhaust temperature (E)	°C	74,0
NOx class		5
Weighted NOx	ppm	18

(E) *Values refer tests with a 1 m flue working at the nominal heat input*

INSTALLATION

CO_2 contents - central heating		
Nominal heat input (A) (E)	kW	25,0
CO_2 content with gas G20 (range min - max)	%	9,2 - 9,8
CO_2 content with gas G31 (range min - max)	%	9,9 - 10,8
Minimum heat input (A) (E)	kW	8,5
CO_2 content with gas G20 (range min - max)	%	8,7 - 9,3
CO_2 content with gas G31 (range min - max)	%	9,4- 10,4

CO_2 contents - domestic hot water		
Nominal heat input (A) (E)	kW	30,0
CO_2 content with gas G20 (range min - max)	%	9,2 - 9,8
CO_2 content with gas G31 (range min - max)	%	9,9 - 10,8
Minimum heat input (A) (E)	kW	8,5
CO_2 content with gas G20 (range min - max)	%	8,7 - 9,3
CO_2 content with gas G31 (range min - max)	%	9,4- 10,4

Other specifications		
Height	mm	700
Width	mm	400
Depth	mm	290
Weight (dry)	kg	34,5
Water volume in the boiler (up to 1 bar)	l (kg)	2,5

TECHNICAL INFORMATION

Model(s):			**Advance Plus 30C ERP**
Condensing boiler:			Yes
Low-temperature boiler (**):			No
B1 boiler:			No
Cogeneration space heater:	No	If yes, equipped with a supplementary heater:	-
Combination heater:			Yes

Item	Symbol	Value	Unit	Item	Symbol	Value	Unit
Rated heat output	**P_{rated}**	**25**	**kW**	**Seasonal space heating energy efficiency**	**η_s**	**92**	**%**
For boiler space heaters and boiler combination heaters: Useful heat output				For boiler space heaters and boiler combination heaters: Useful efficiency			
At rated heat output and high-temperature regime (*)	P_4	24,4	kW	At rated heat output and high-temperature regime (*)	η_4	88,0	%
At 30% of rated heat output and low-temperature regime (**)	P_1	8,1	kW	At 30% of rated heat output and low-temperature regime (**)	η_1	97,0	%
Auxiliary electricity consumption				Other items			
At full load	elmax	0,095	kW	Standby heat loss	P_{stby}	0,098	kW
At part load	elmin	0,010	kW	Ignition burner power consumption	P_{ign}	-	kW
In standby mode	P_{SB}	0,005	kW	Annual energy consumption	Q_{HE}	51,183	GJ
				Sound power level, indoors	L_{WA}	52	dB
				Emission of nitrogen oxides	NO_x	31	mg/kWh

For combination heaters:

Declared load profile	XL			**Water heating energy efficiency**	η_{wh}	87	%
Daily electricity consumption	Q_{elec}	0,163	kWh	Daily fuel consumption	Q_{fuel}	22,169	kWh
Annual electricity consumption	AEC	36	kWh	Annual fuel consumption	AFC	17	GJ
Contact details	See manual cover						

(*) High-temperature regime means 60°C return temperature at heater inlet and 80°C feed temperature at heater outlet.

(**) Low temperature means for condensing boilers 30°C, for low-temperature boilers 37°C and for other heaters 50°C return temperature (at heater inlet).

4.7 Technical data Advance Plus 35C ERP

Heat input		
Nominal net [A] central heating	kW	30,0
	BTU/h	102364
Nominal net [A] domestic hot water	kW	34,0
	BTU/h	116013
Nominal gross [B] central heating	kW	33,3
	BTU/h	113624
Nominal gross [B] domestic hot water	kW	37,7
	BTU/h	128774
Minimun net [A] ch - dhw	kW	8,5
	BTU/h	29003
Minimun gross [B] ch - dhw	kW	9,4
	BTU/h	32194

Useful output		
Maximun (central heating)	kW	29,5
	BTU/h	100522
Maximun (domestic hot water)	kW	33,4
	BTU/h	113965
Minimun (ch - dhw)	kW	8,3
	BTU/h	28307
Maximun condensing (central heating)	kW	32,1
	BTU/h	109632
Maximun condensing (domestic hot water)	kW	36,4
	BTU/h	124202
Minimun condensing (ch - dhw)	kW	9,2
	BTU/h	31289

Central heating		
Min/Max flow temperature settings*	°C	25 - 85
Maximum pressure	kPa	250
	bar	2,5
Minimum pressure	kPa	30
	bar	0,3
Available head (in 1000 l/h)	kPa	27,0
	bar	0,27
Seasonal efficency G20 [c]	%	88,6
Seasonal efficency G31 [c]	%	89,6

* to the minimum useful output

[A] referred to the net calorific value at 15 °C and 1013,25 mbar: G20 = 34,02 MJ/m^3 - G31 = 46,34 MJ/kg

[B] referred to the gross calorific value at 15 °C and 1013,25 mbar: G20 = 37,78 MJ/m^3 - G31 = 50,37 MJ/kg

[C] The value is used in the UK Government's Standard Assessment Procedure (SAP) for energy rating of dwellings. The test data from which it has been calculated have been certified by a notified body.

[D] Values subject to tolerance

Domestic hot water		
Min/Max temperature settings	°C	35 - 55
Maximum pressure	kPa	1000
	bar	10
Minimum pressure	kPa	30
	bar	0,3
Flow rate minimun	l/min	2,5
Flow rate 30° rise [D]	l/min	19,2
Flow rate 35° rise [D]	l/min	15,6
Flow rate 40° rise [D]	l/min	13,5

INSTALLATION

TECHNICAL INFORMATION

Gas supply pressures			
Gas		Pa	mbar
Natural G20	**Nom**	2000	20
	Min	1700	17
	Max	2500	25
Propane G31	**Nom**	3000	30
	Min	2000	20
	Max	3500	35

Gas rate maximum - central heating		
Natural G20	m^3/h	3,17
Propane G31	kg/h	2,33
Gas rate maximum - domestic hot water		
Natural G20	m^3/h	3,60
Propane G31	kg/h	2,64
Gas rate minimum - ch dhw		
Natural G20	m^3/h	0,90
Propane G31	kg/h	0,66

Gas restrictors references		Ø mm /100
Natural G20		690
Propane G31		505
Air/gas mixer restrictors		
Natural G20	Blue	Blu
Propane G31	Blue	Blu

Electrical data		
Voltage	V~	230
Frequency	Hz	50
Nominal Power consumption	W	112
Minimum Power consumption	W	57
Stand-by Power consumption	W	5
Protection degree		IPX5D
External fuse rating	A	3
Internal fuse rating	A	N° 2 - 2 AF

Flue design		
Boiler type		
B23P C13 C33 C43 C53 C63 C83		
ø Coaxial	mm	60/100
ø Twin split pipes	mm	80/80
ø Roof	mm	80/125
Nominal heat flow rate (A) (E)	kW	34,0
Exhaust temperature (E)	°C	81,6
Mass flow rate (E)	kg/s	0,0133

Flue gas figures		
Nominal heat input (A) (E)	kW	34,0
CO_2 content with gas G20	%	9,3 - 9,9
O_2 content with gas G20	%	3,9
CO content with gas G20	ppm	160,0
Exhaust temperature (E)	°C	81,6
NOx class		5
Weighted NOx	ppm	22

(E) *Values refer tests with a 1 m flue working at the nominal heat input*

INSTALLATION

CO_2 contents - central heating		
Nominal heat input (A) (E)	kW	30,0
CO_2 content with gas G20 (range min - max)	%	9,2 - 9,8
CO_2 content with gas G31 (range min - max)	%	9,9 - 10,8
Minimum heat input (A) (E)	kW	8,5
CO_2 content with gas G20 (range min - max)	%	8,7 - 9,3
CO_2 content with gas G31 (range min - max)	%	9,4- 10,4

CO_2 contents - domestic hot water		
Nominal heat input (A) (E)	kW	34,0
CO_2 content with gas G20 (range min - max)	%	9,3 - 9,9
CO_2 content with gas G31 (range min - max)	%	10,0 - 10,9
Minimum heat input (A) (E)	kW	8,5
CO_2 content with gas G20 (range min - max)	%	8,7 - 9,3
CO_2 content with gas G31 (range min - max)	%	9,4- 10,4

Other specifications		
Height	mm	700
Width	mm	400
Depth	mm	290
Weight (dry)	kg	34,5
Water volume in the boiler (up to 1 bar)	l (kg)	2,5

TECHNICAL INFORMATION

Model(s):					**Advance Plus 35C ERP**
Condensing boiler:					Yes
Low-temperature boiler (**):					No
B1 boiler:					No
Cogeneration space heater:		No	If yes, equipped with a supplementary heater:		-
Combination heater:					Yes

Item	Symbol	Value	Unit	Item	Symbol	Value	Unit
Rated heat output	P_{rated}	**30**	**kW**	**Seasonal space heating energy efficiency**	η_s	**92**	**%**
For boiler space heaters and boiler combination heaters: Useful heat output				For boiler space heaters and boiler combination heaters: Useful efficiency			
At rated heat output and high-temperature regime (*)	P_4	29,5	kW	At rated heat output and high-temperature regime (*)	η_4	88,4	%
At 30% of rated heat output and low-temperature regime (**)	P_1	9,7	kW	At 30% of rated heat output and low-temperature regime (**)	η_1	96,6	%
Auxiliary electricity consumption				Other items			
At full load	elmax	0,104	kW	Standby heat loss	P_{stby}	0,118	kW
At part load	elmin	0,010	kW	Ignition burner power consumption	P_{ign}	-	kW
In standby mode	P_{SB}	0,005	kW	Annual energy consumption	Q_{HE}	59,096	GJ
				Sound power level, indoors	L_{WA}	53	dB
				Emission of nitrogen oxides	NO_x	38	mg/kWh

For combination heaters:

Declared load profile	XXL			**Water heating energy efficiency**	η_{wh}	85	%
Daily electricity consumption	Q_{elec}	0,228	kWh	Daily fuel consumption	Q_{fuel}	28,434	kWh
Annual electricity consumption	AEC	50	kWh	Annual fuel consumption	AFC	22	GJ
Contact details	See manual cover						

(*) High-temperature regime means 60°C return temperature at heater inlet and 80°C feed temperature at heater outlet.

(**) Low temperature means for condensing boilers 30°C, for low-temperature boilers 37°C and for other heaters 50°C return temperature (at heater inlet).

5 GENERAL REQUIREMENTS

Benchmark places responsibilities on both manufacturers and installers. The purpose is to ensure that customers are provided with the correct equipment for their needs, that it is installed, commissioned and serviced in accordance with the manufacturer's instructions by competent persons and that it meets the requirements of the appropriate Building Regulations. The Benchmark Checklist can be used to demonstrate compliance with Building Regulations and should be provided to the customer for future reference.
Installers are required to carry out installation, commissioning and servicing work in accordance with the Benchmark Code of Practice which is available from the Heating and Hotwater Industry Council who manage and promote the Scheme. Visit www.centralheating.co.uk for more information.

Our Company supports the Benchmark initiative. The Benchmark Checklist is located at the back of this manual and should be completed by the Installing/ Commissioning Gas Safety Registered Engineer and handed over to the User for future reference by other visiting Engineers. Also included is the Service Interval Record card that should be completed by the Service Engineer following the annual service maintenance of the boiler and system.
For Ireland (IE), it is necessary to complete a "Declaration of Conformity" to indicate compliance to I.S.813.2002.
This appliance must be installed by a competent person in accordance with the Gas Safe (installation & Use) Regulations.

5.1 Related documents

The installation of this appliance must be in accordance with the relevant requirements of the current Gas Safe (Installation & Use) Regulations, the Local Building Regulations, the current I.E.E. Wiring Regulations, the Regulations and by-laws of the local water undertaking, and in Scotland, in accordance with the Building Standards (Scotland) Regulation. Health and safety document n° 635 "Electricity at work regs.".
It should also be in accordance with the British Standard Codes of Practice:
In Ireland (IE). The installation must be carried out by a Competent Person and installed in accordance with the current edition of I.S.813.2002 "Domestic Gas Installations" the current Building Regulations and reference should be made to the current ETCI rules for electrical installations.

5.2 Location of appliance

The appliance may be installed in any room or internal space, although particular attention is drawn to the requirements of the current I.E.E. Wiring Regulations, and in Scotland, the electrical provisions of the Building Regulations applicable in Scotland, with respect to the installation of the combined appliance in a room containing a bath or shower.
For Ireland (IE), reference should be made to the current edition of I.S.813.2002 and the current ETCI rules for electrical installations.

Where a room-sealed appliance is installed in a room containing a bath or shower, any electrical switch or appliance control, utilising mains electricity should be so situated that it cannot be

touched by a person using the bath or shower.

The location must permit the provision of an adequate flue and termination.
For unusual locations special procedures may be necessary and BS 6798 gives detailed guidance on this aspect.
A compartment used to enclose the appliance must be designed specifically for this purpose. This appliance is not suitable for external installation.

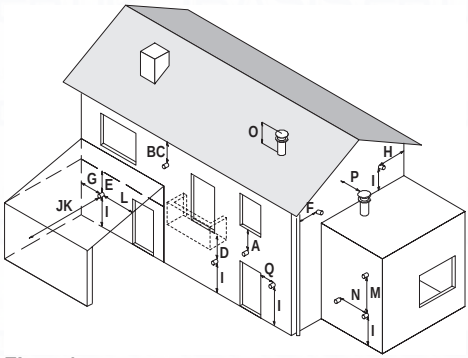

Fig. 5.1

5.3 Flue system

The provision for satisfactory flue termination must be made as described in BS 5440 part 1.
For Ireland (IE), refer to I.S.813.2002.
The appliance must be installed so that the flue terminal is exposed to external air.
It must not be installed so that the terminal discharges into an other room or space as an outhouse or lean-to. It is important that the position of the terminal allows a free passage of air across at all times.
The terminal should be located with due regard for the damage or discoloration that might occur to building products in the vicinity.
In cold and/or humid weather water vapour may condense on leaving the flue terminal; the effect of such ”steaming” must be considered.
Pluming may easily occur at the terminal. Where possible, terminal position which could cause a nuisance should be avoided.
The minimum acceptable spacing from the terminal to obstructions and ventilation openings are specified in Fig. 5.1.

	Terminal position	mm
A	Directly below the window or other opening	300
B	Below gutters, soil pipes or drain pipes	75
C	Below eaves	200
D	Below balconies*	600
E	Below car port roof	NO
F	From vertical drain pipes and soil pipes	150
G	From internal corners**	450
H	From external corners	300
I	Above ground or balcony level***	300
J	From a wall or surface	600
K	From a terminal facing a terminal	2500
L	From an opening in the car port (e.g. door, window) into dwelling	NO
M	Vertically from a terminal in the same wall	1500
N	Horizontally from a terminal in the same wall	300
O	Above the roof pitch with roof slope less than or equal to 30°	350
O	Above the roof pitch with roof slope more than 30°	600
P	From wall face	600
Q	From, above or to side of an opening	600

* Wherever practicable to do so, the flue

INSTALLATION

should be extended beyond the perimeter of the balcony

** Consideration should be given to adding protection against condensate to the adjacent structure

*** Wall terminals with horizontal discharge less than 2.5 m from a car parking space and less than 2,1 m above the ground. Wall terminals less than 2,1 m above the ground with horizontal discharge of the flue products across a public footway, or a frequently used private access route, or a patio (hard surface area).

5.4 Gas supply

The Gas meter is connected to the service pipe by the local gas region or a local gas region contractor.

If the gas supply for the boiler serves other appliances ensure that an adequate supply is available both to the boiler and the other appliance when they are in use at the same time.

Pipework must be of adequate size. Pipes of a smaller size than the boiler inlet connection should not be used.

Installation pipes should be fitted in accordance with BS 6891 and the complete installation should be tested for tightness.

For Ireland (IE), refer to I.S.813.2002.

5.5 Air supply

The room in which the boiler is installed does not require a purpose provided air vent.

5.6 Ventilation

If installed in a cupboard or compartment, it is not necessary to provide additional ventilation for cooling for this particular product. However consideration must be given to clearance requirements for maintenance (section "Precautions for installation" to page 44) and under no circumstances must stored articles be allowed to come into contact with the boiler or flue pipe.

5.7 Condensate drain

Ensure that the condensate discharge complies with the national or local regulations in force.

The condensate pipe must be fitted in accordance with Building Regulations.

Drain pipe material should be resistant to acid as the condensate is slightly acid with a pH less than 6.5.

The boiler includes a trap (26 on page 22) that prevents the combustion products entering the drain.

The boilers incorporate a condensate trap with a 75 mm seal to comply with BS 6798: 2008.

The schematic diagrams of possible connections are given in Fig. 5.2 and Fig. 5.3.

The length of the condensate pipe should be kept to a minimum, any external pipe should not be more than 3 m in 32 mm pipe and insulated to prevent freezing.

To avoid condensate being trapped:

- the drain pipe should be run with a fall of at least 2.5° (45 mm/m) away from the boiler;
- the number of bends and joints should be kept at minimum;
- the drain pipe should be adequately fixed to prevent pipe sagging.

If a part of the drainpipe runs externally this part should be kept as short as possible and protected to reduce the risk of freezing.

Connection of condensate drainage pipe to internal soil and vent stack.

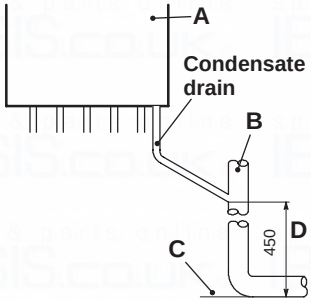

Dimensions in mm

Fig. 5.2

A Boiler
B Internal soil and vent stack
C Invert
D 450 mm up to three storeys

Connection of condensate drainage pipe downstream of a sink waste trap

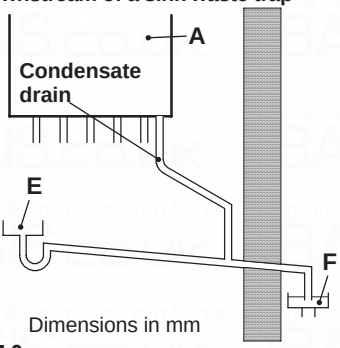

Dimensions in mm

Fig. 5.3

A Boiler
E Sink
F Open end of condensate drainage pipe direct into gully below grating but above water level

5.8 Water circulation (c.h.)

Detailed recommendations are given in BS 6798, BSEN 12828: 2003, BSEN 12831: 2003 & BSEN 14446: 2004; the following notes are given for general guidance.

For Ireland (IE), refer to I.S.813.2002.

Pipework

Copper tubing to BSEN 1057 is recommended for water pipes. Jointing should be either with capillary soldered or with compression fittings.

Where possible pipes should have a gradient to ensure air is carried naturally to air release points and water flows naturally to drain taps.

The appliance has a built-in automatic air release valve, it should be ensured as far as possible that the appliance heat exchanger is not a natural collecting point for air.

Except where providing useful heat, pipes should be insulated to prevent heat loss and to avoid freezing.

Particular attention should be paid to pipes passing through ventilated spaces in roofs and under floors.

By-pass

The appliance includes an automatic by-pass valve which protects the main heat exchanger in case of reduced or interrupted water circulation through the heating system due to the closing of thermostatic valves or cock-type valves within the system.

The by-pass is calibrated to assure a minimum flow of 200-300 lts/hr through the main heat exchanger.

If you are installing a system that includes thermostatic radiator valves (TRV) and/or small bore (8-10 mm) it may be necessary to fit an external by-pass to facilitate correct operation of the boiler.

The fitting of an external bypass helps to prevent and limit system noise.

Air release points

These must be fitted a tall high points where air will natural collect and must be sited to facilitate complete filling of the system.

Expansion vessel
The appliance has an integral sealed expansion vessel to accommodate the increase of water volume when the system is heated.
Refer to Fig. 4.5 on page 25 for its technical data.
If the heating circuit has an unusually high water content, calculate the total expansion and add an additional sealed expansion vessel with adequate capacity.

Mains water feed: central heating
There must be no direct connection to the mains water supply even through a non return valve, without the approval of the Local Water Authority.

Mains water feed: hot water supply
The domestic section of the boiler is designed to withstand an internal domestic water pressure of 10 bar. Where it is likely that the mains domestic water pressure may exceed 5 bar, it is possible due to internal “water hammer” effects that the pressure within the domestic system can increase to a level in excess of the 10 bar limit.
In these circumstances it is therefore recommended that a 3 bar pressure reducing valve be fitted to the incoming mains water supply and a mini expansion vessel installed on the domestic circuit.
These devices will protect the boiler and the domestic system from damage due to excessive domestic water pressure.

Filling
A method for initially filling the system and replacing water lost during servicing must be provided and it must comply with local water authority regulations.
The correct method is shown in Fig. 5.4.
The temporary connection must be removed immediately after filling.

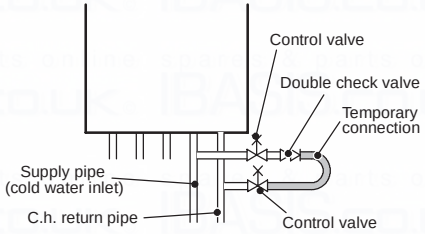

Fig. 5.4

The installer should ensure that no leaks exist either inside the boiler or on the system as frequent filling of the system could cause premature scaling of the heat exchanger.

5.9 Domestic water

The domestic water installation must be in accordance with the relevant recommendations of BS 5546. Copper tubing to BS EN 1057 is recommended for water carrying pipework and must be use for pipework carrying potable water.
For Ireland (IE), refer to I.S.813.2002.

5.10 Water treatment

C.h. circuit
Where a new boiler is fitted to a new system with either plastic or copper pipes, it is important the system is fully flushed, on completion, to ensure flux residues, swarfs, oils and other installation debris is removed.
Where a new boiler is fitted to an existing system, it is important the debris from the existing system is fully removed in order to ensure the efficiency of the new appliance is maintained.
Details on flushing procedure are given in the section "Initial filling of the system" to page 58 of this manual.

D.h.w. circuit (scale protection)
In areas where the water is ’hard’ (i.e. more than 200 ppm total hardness as defined by

INSTALLATION

BS 7593: 2006 Table 2) it is recommended that a proprietary scale-reducing device is fitted into the boiler cold supply, within the requirements of the local water company.

5.11 Electrical supply

Warning, this appliance must be earthed.

External wiring to the appliance must be carried out by a competent person and be in accordance with the current I.E.E. Regulations and any local regulations which apply. Reference should be made to the current ETCI rules for electrical installations.

For Ireland (IE), refer to I.S.813.2002.

The boiler is supplied for connection to a 230 V~ 50 Hz supply. The supply must be fused at 3A.

The method of connection to the electricity supply must facilitate complete electrical isolation of the appliance by the use of a fused spur isolation switch. Its installation permits a complete switching off in the conditions of the overvoltage category III. Alternatively it can be used a 3A fused three pin plug and unswitched shuttered socket outlet both complying with BS 1363.

The point of connection to the electricity supply must be readily accessible and adjacent to the appliance, except where the appliance is installed in a bathroom, this must then be sited outside the bathroom.

6 INSTALLATION

6.1 Warnings

The use of gas appliances is subject to statutory control; it is essential to observe the current regulations and laws in force (see also chapter 5).
The appliance must discharge combustion products directly outside or into a suitable exhaust duct designed for this purpose. Combustion products must be discharged using original flue kits only, since they are integral parts of the boiler.
The appliance is not suitable for receiving condensate coming from the combustion products evacuation system.

Combustion air must avoid contents of chlorine, ammonia, or alkali agents. Installation of a boiler near a swimming pool, a washing machine, or a laundry does expose combustion air to these aggressive contents".

Before installing the boiler on an existing c.h. system, flush it out thoroughly before fitting the boiler.
This procedure is to remove the presence of any residues or impurities that could compromise good functioning of the boiler.
After washing it is necessary to treat the plant.
The conventional warranty does not cover any problems deriving from failure to comply with such provisions.

For Propane, the appliance must also conform with the requirements of the distributors and comply with current Regulations and laws in force.
The safety relief valve and the condensate drain must be connected to a suitable drain, or discharge in a safe manner.

The electrical wiring must conform with current Regulations, in particular:
- the boiler must be earthed using the correct bonding clamp.
- a fused spur isolation switch, must be installed near to the boiler that allows complete disconnection in overvoltage III category conditions.

Refer to section "Electric connection" to page 52 in this chapter for the electrical connections.

In no circumstances will the manufacturer be held responsible if the warnings and instructions contained in this manual have not been complied with.

6.2 Precautions for installation

The following prescriptions must be respected for installation:

- The boiler must be fixed to a strong wall.
- The dimensions for the exhaust fume duct (detailed in section "Choice of flu" to page 48) and the correct procedures for installing the duct, depicted in the instruction leaflet included with the flue kit, must be complied with during installation.
- To allow maintenance procedures it is necessary to leave the minimum gaps indicated in Fig. 6.1.

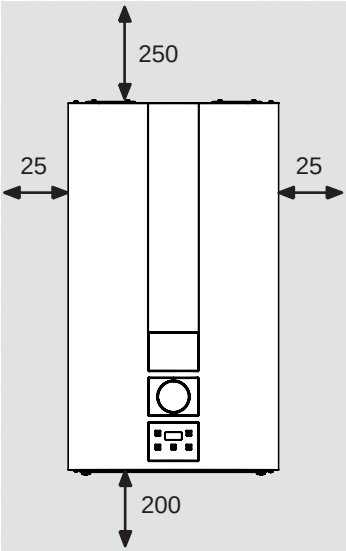

All measures are in mm

Fig. 6.1

- When installing the boiler in a cupboard, cover or alcove allow at least 5 mm permanent clearance from the front face of the boiler. Also ensure sufficient clearance to allow free access for servicing and the lowering of the front control panel.

- If the boiler is installed outside, cover the appliance to protect it against the elements and add some special anti-freeze (neutralised) to the c.h. system.

- Before installing the boiler on an existing c.h. system, flush it out thoroughly before fitting the boiler, so as to remove muddy deposits.

It is advisable to equip the system with a sediment filter, or use a water-treatment product in the circulating water.
The latter option in particular, not only cleans out the system, but also has an anti-corrosive effect by promoting formation of a protective skin on metal surfaces and neutralising gases present in the water.
We recommend the use of a suitable universal inhibitor to protect the c.h. system from corrosion.

6.3 Installing the bracket

Precautions

Before mounting the bracket, check that the dimensions for fitting the exhaust fume duct are complied with (refer to the leaflet included with the flue kit, packed separately).
Utilise the paper template supplied with the boiler to determine the fixing position for the bracket and boiler. Securely mount the bracket to the wall using appropriate fixings suitable for the type of wall construction and capable of supporting the total (wet) load. Refer to the weight given in the technical data tables specific for each model.

6.4 Overall dimensions

The boiler respects the following dimensions:

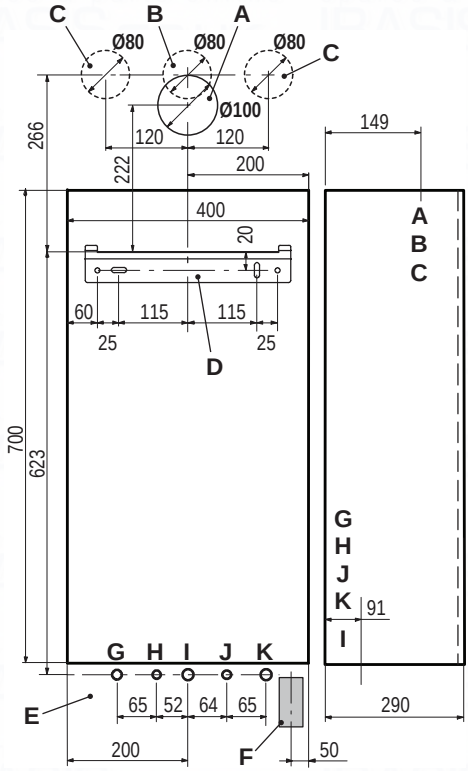

Fig. 6.2

A Flue outlet / air intake pipe (co-axial ø 100/60)
B Flue outlet pipe ø 80 mm (twin kit)
C Air intake pipe ø 80 mm (twin kit)
D Bracket
E Electric connections area
F Condensate drain connection area
G C.h. flow
H D.h.w. outlet
I Gas
J D.c.w. inlet
K C.h. return

6.5 Joints

The boiler uses the following fittings:

Functions	Pipe sizes (o.d)
Gas, c.h. return, c.h. flow	ø 22
D.c.w. inlet	ø 15
D.h.w. outlet	ø 15
Pressure relief valve	ø 15
Condensate drain	ø 25 (plastic)
sizes in mm o.d.	

Condensate drain to be realised with min. pipe ø 30 mm

6.6 Mounting the boiler

- Assemble the pre-piping kit bracket by screwing the four screws "L" Fig. 6.3.
- Fix the water valves "O" (½") using the forks "M" to the prepiping kit bracket.
- Fix the c.h. valves "N" and the gas cock "P" with the remaining forks "M" to the prepiping kit bracket.
- Mount the bracket of the prepiping kit to the wall (See also section "Installing the bracket" pag. 45)
- Fix the Ø 22 mm copper pipes "Q – U" to the valves "N – P" using the ¾" gaskets and the Ø 15 mm copper pipes "R – T" to the valves "O" using the½" gaskets.
- Take the protective caps off the boiler pipework.
- Thoroughly clean the connections.
- Mount the boiler on its bracket.
- Fix the c.h. valves "N" and gas cock "P" (¾") to the boiler using the ¾" gaskets
- Fix the domestic water inlet and outlet valves "O" (½") to the boiler using the ½" gaskets.

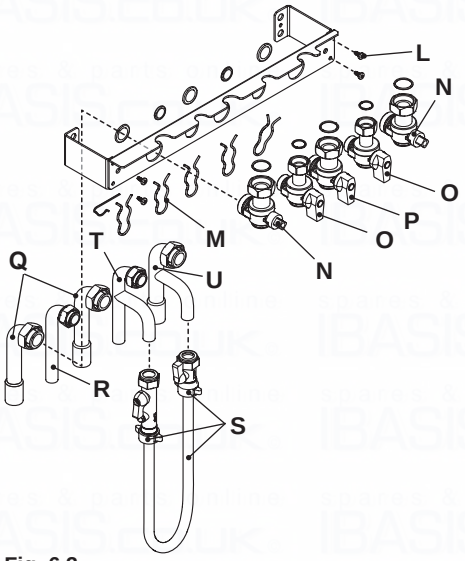

Fig. 6.3

- Connect the pipe 11 (Fig. 6.4) from the pressure relief valve to the safety discharge pipework.
- Fit the condensate drain 9 (Fig. 6.4) in to the drainage pipework.
- See also section 5.7 in this manual.

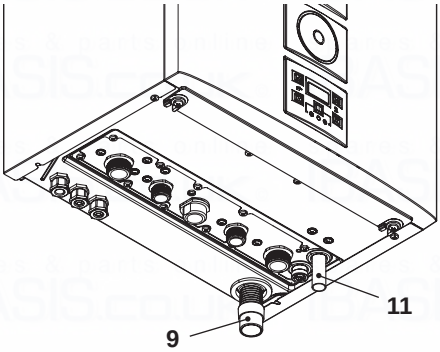

Fig. 6.4

- Fit the filling loop "S" to the pipes d.c.w. inlet "T" and c.h. return "U". See also section "Water circulation (c.h.)" pag. 41 in this manual.

6.7 Fitting the flue system

For a correct installation of the flue pipe, refer to the sheet provided together with the pre-selected kit.
The horizontal routes of the flue pipes must incline about 1.5 degrees (25 mm per meter); therefore the terminal must be higher than the intake at the boiler.
The single coaxial pipe with the terminal must be fitted horizontal as the drainpipe is already angled with the correct incline.

CORRECT system for installing the wall flue

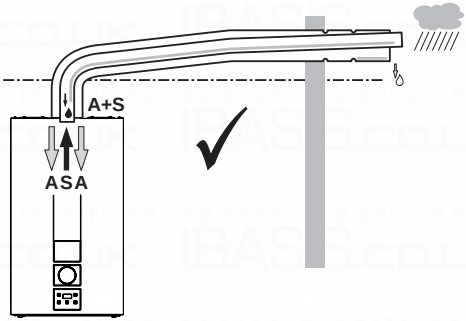

Fig. 6.5
A = air intake
S = flue exhaust

CORRECT system for installing

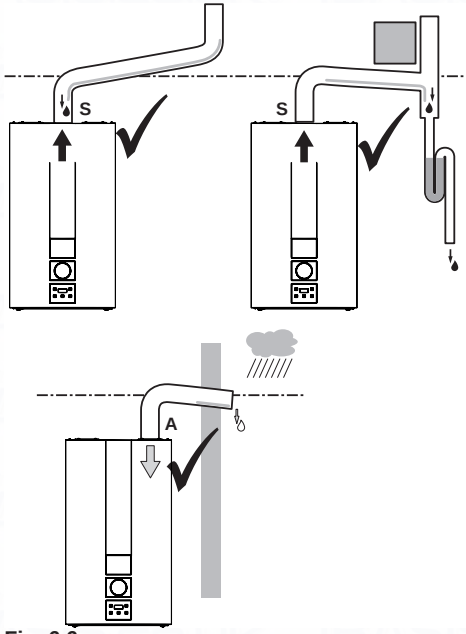

Fig. 6.6
A = air intake
S = flue exhaust

INCORRECT system for installing

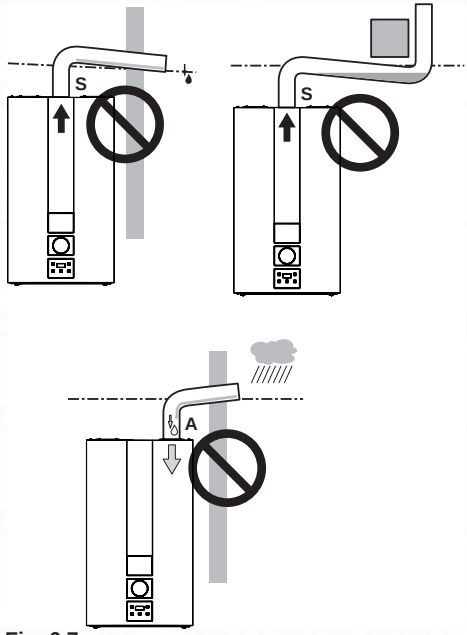

Fig. 6.7
A = air intake
S = flue exhaust

6.8 Choice of flu

The flue exhaust/air intake can be installing in the mode:
C_{13} C_{33} C_{53} C_{63}

Refer to the sheet provided with the pre-selected kit, in separate packaging.
The horizontal routes of the flue pipes must incline about 1.5 degrees (25 mm per meter).

The terminal must be higher than the infeed boiler side.

The single coaxial pipe with terminal must be horizontal because the drain pipe is already angled.
The following kits to be connected to the boiler are available:

Wall flue exhaust kit (Fig. 6.8 A)

Type C_{13}

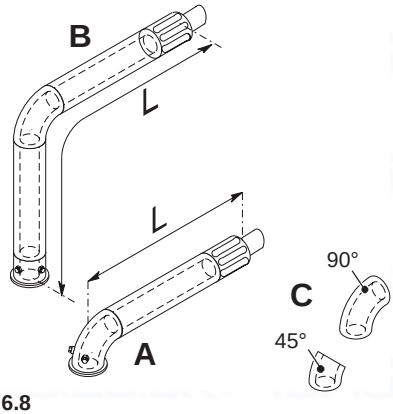

Fig. 6.8

Coaxial pipe Ø 60/100 mm with a nominal length of 915 mm.
This kit allows the flues to be exhausted in the rear wall or at the side of the boiler.
The minimum length of the pipe must be no less than 0.5 m, whilst the maximum with the aid of extensions must not exceed 10 m.

Vertical flue exhaust kit with 90° bend (Fig. 6.8 B)

Coaxial pipe Ø 60/100 mm.
This kit allows the boiler exhaust axis to be lifted by 635 mm.
The length must be no less than 0.5 m, whilst the maximum with the aid of extensions must not exceed 10 m in horizontal and however, the terminal must always exhaust horizontally.

Additional bends at 45° or 90° (Fig. 6.8 C)

Coaxial bends Ø 60/100 mm.
These bends when used with the pipe reduce the maximum length of the flue pipe by:

For the bend of 45° loss	0,5 m
For the bend of 90° loss	1 m

Exhaust intake split pipes kit Ø 80 mm - (Fig. 6.9) - (Fig. 6.10)

This kit allows the flue exhaust to be separated from the air intake.
The terminals can be inserted in the relevant chimneys planned for such purpose, or discharge fumes or pick up air directly from the wall.

N.B: The air intake and the flue outlet must not terminate on opposite sides of the building (EN 483).

Type C_{13}

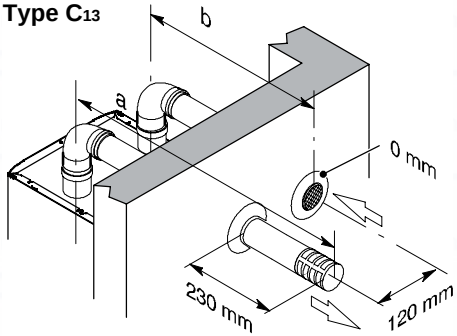

Fig. 6.9

The minimum length of the pipes must be less than 0.5 m, whilst the maximum sum of routes A + B that can be realised with the aid of extensions must not exceed 40 m.

Bends of Ø 80 mm at 90° and at 45° are available that reduce the maximum total length of the pipes by:

For the bend of 45° loss	0,9 m
For the bend of 90° loss	1,65 m

Type C_{53}

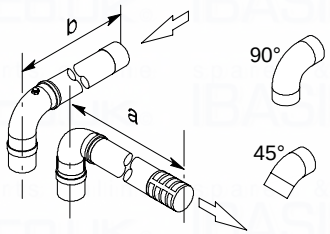

Fig. 6.10

C_{63} TYPE

If using pipes and terminals by other manufacturers (Type C_{63}), it is necessary that these are approved and in the case of flue pipes, it is necessary to use materials compatible with condensation products.
During the pipes dimensioning phase, take into consideration the static pressure residue of the fan:

Useful static pressure at nominal heat input	**25 kW**	90	Pa
	30 kW	90	Pa
	35 kW	90	Pa
Overheated flue	**25 kW**	93	°C
	30 kW	98	°C
	35 kW	98	°C
Maximum recirculation of CO_2 in the suction duct	**25 kW**	0,95	%
	30 kW	0,95	%
	35 kW	0,95	%

Roof flue exhaust kit (Fig. 6.11)

Coaxial pipe Ø 80/125 mm with a nominal height of 0.96 m.
This kit exhausts directly to the roof.

Type C_{33}

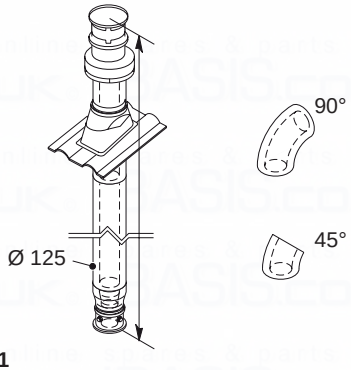

Fig. 6.11

Extensions are available for reaching the maximum height.
Its maximum height with extension is 10 m.
Bends of Ø 80 mm at 90° and at 45° are available that reduce the maximum total length of the pipes by:

For the bend of 45° loss	0,5 m
For the bend of 90° loss	1 m

Pluming kit A (Fig. 6.12)

Co-axial ø 60/100 mm + vertical part ø 60 mm (flue outlet).
This kit allows the combustion air to be sucked up and expel the burnt gases directly to the outside through a telescopic co- axial flue (450-950 mm).

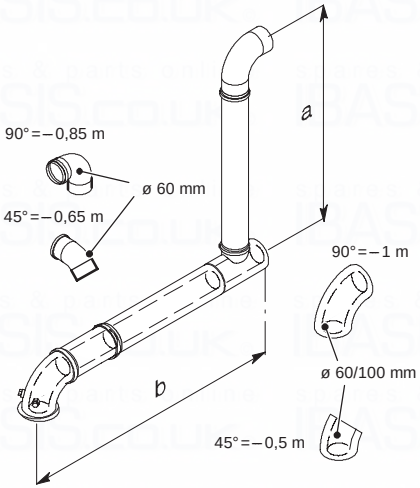

Fig. 6.12

In the last section, the fumes are expelled through a vertical section.
Extensions and elbows can be added to extend the kit's length.
Maximum equivalent length "**a+b**" (Fig. 6.12) of 15 metres can be achieved utilising extensions.

Each additional elbow reduces the overall acceptable length of the flue system as follows:
45° (60/100 mm) reduce length by 0,5 m.
90° (60/100 mm) reduce length by 1 m.
45° (60 mm) reduce length by 0,65 m.
90° (60 mm) reduce length by 0,85 m.

Pluming kit B (Fig. 6.13) (Fig. 6.14)
Co-axial ø 60/100 mm + vertical part ø 60 mm (flue outlet).
This kit allows the combustion air to be sucked up and expel the burnt gases directly to the outside through a telescopic co- axial flue (450-950 mm).

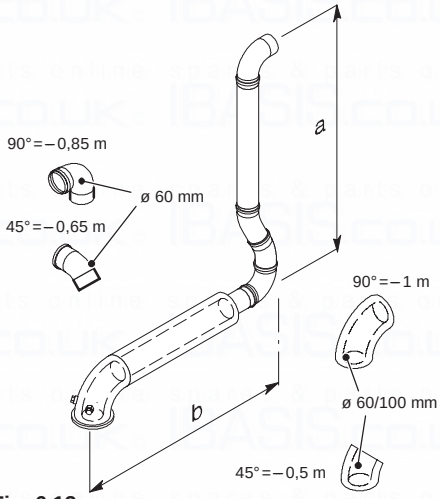

Fig. 6.13

In the last section, the fumes are expelled through a vertical section.
Extensions and elbows can be added to extend the kit's length.
Maximum equivalent length "**a+b**" (Fig. 6.13) of 15 metres can be achieved utilising extensions.

In the last section, the fumes are expelled through a vertical section.
Extensions and elbows can be added to extend the kit's length.
The chart of Fig. 6.14 gives the allowable dimensions of the ducts "**a**" and "**b**" of (Fig. 6.13).

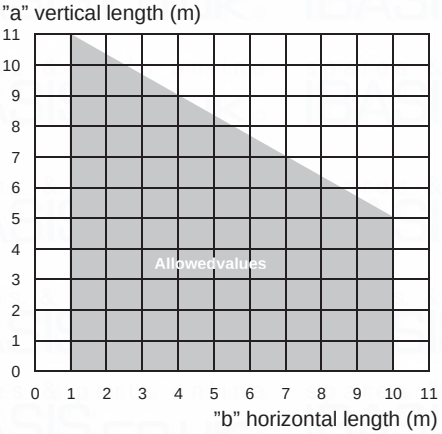

Fig. 6.14

Each additional elbow reduces the overall acceptable length of the flue system as follows:
45° (60/100 mm) reduce length by 0,5 m.
90° (60/100 mm) reduce length by 1 m.
45° (60 mm) reduce length by 0,65 m.
90° (60 mm) reduce length by 0,85 m.

6.9 Electric connection

- Unscrew screws "V" and remove the front panel "W" by pulling it and pushing it towards the top so that it is freed from the top housing Fig. 6.15.

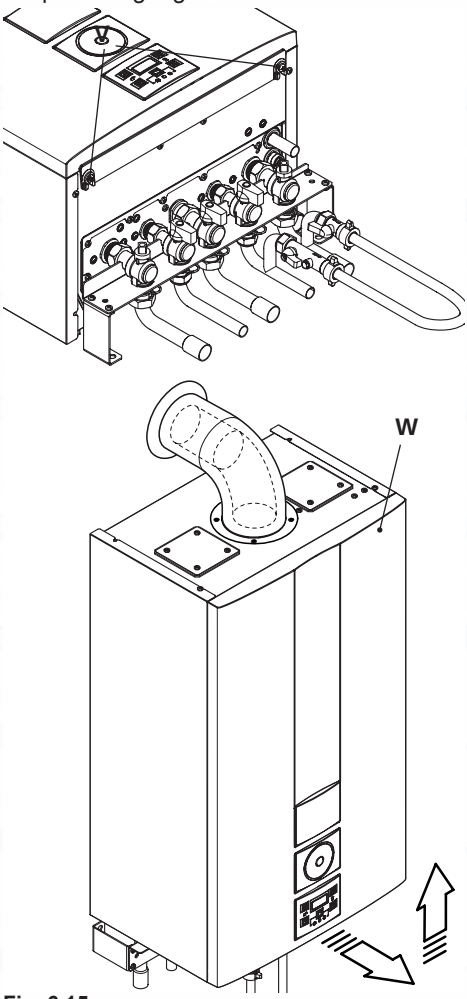

Fig. 6.15

- Identify the terminal block cover lid "X" (Fig. 6.16) and open it.

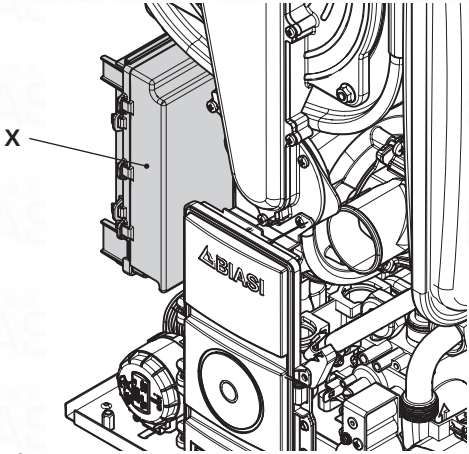

Fig. 6.16

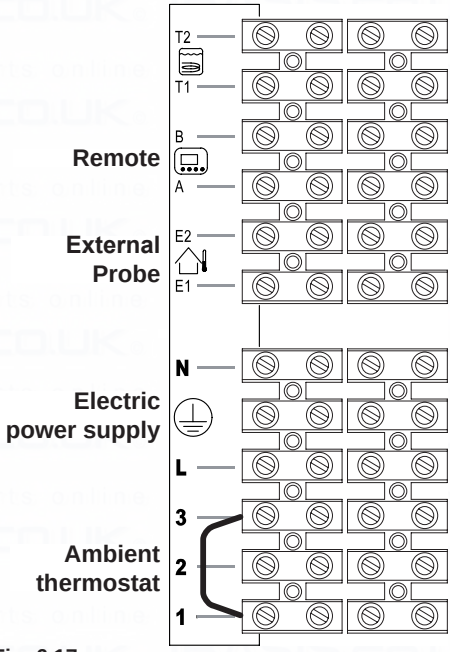

Fig. 6.17

Electric power supply connection

- Connect the electric power supply cable coming from the fused spur isolation switch to the power supply terminal block of the boiler Fig. 6.17 keeping the same connections for the live (brown wire) and the neutral (blue wire). External 3A fuse or fused plug with same current rating is recommended.
- **Do not connect live wires to terminals to which the room thermostat must be connected.**
- **Connect the earth cable (yellow/green) to an effective earth plant.**

The earth cable must be the longest of the electric power supply cables.

The appliance's electric power supply cable or wire must have a section no less than 0.75 mm^2, it must be kept away from hot or sharp parts and however conform to the technical regulations in force.

The route of the boiler and ambient thermostat's electric power supply cable or wires must follow the route indicated in Fig. 6.18.

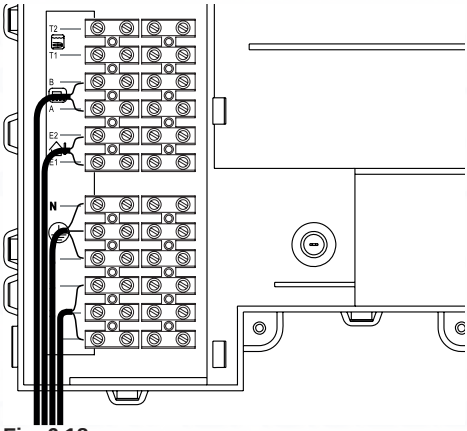

Fig. 6.18

Allow the cables to exit the boiler by using the relevant cable clamps Y (Fig. 6.19).

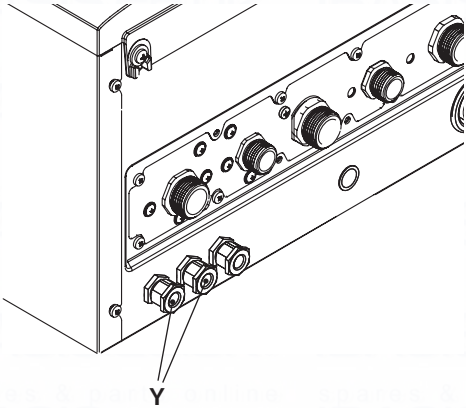

Fig. 6.19

6.10 Connecting the room thermostat or zone valves

Use the clamps indicated in Fig. 6.17 to connect the ambient thermostat.

Remove the electric jumper present between “1 and 3” when connecting any type of ambient thermostat.

The electric cables of the ambient thermostat are inserted between clamps “1 and 3” as in Fig. 6.20 or Fig. 6.21 or Fig. 6.22.

Be careful not to connect powered cables on clamps “1 and 3”.

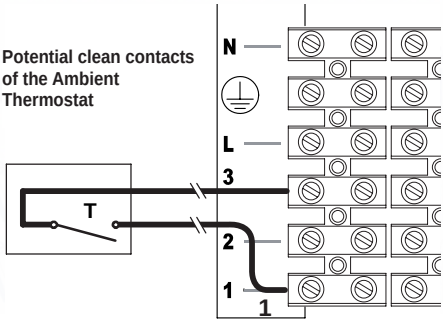

Fig. 6.20

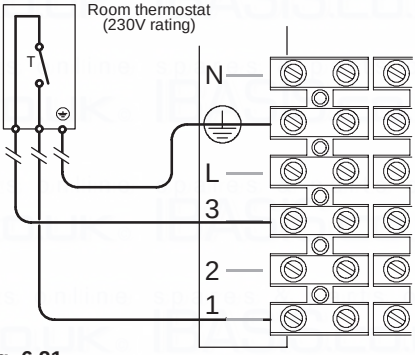

Fig. 6.21

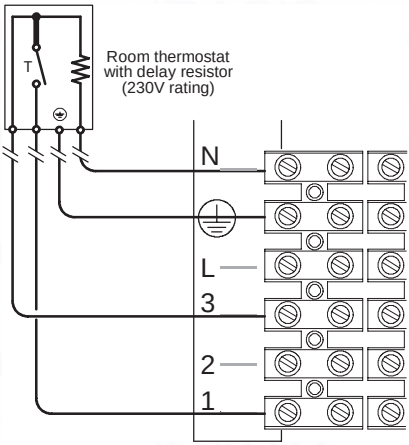

Fig. 6.22

The thermostat must be insulation class II (⧈) or must be correctly connected to earth.

Connecting the zone valves controlled by the ambient thermostat

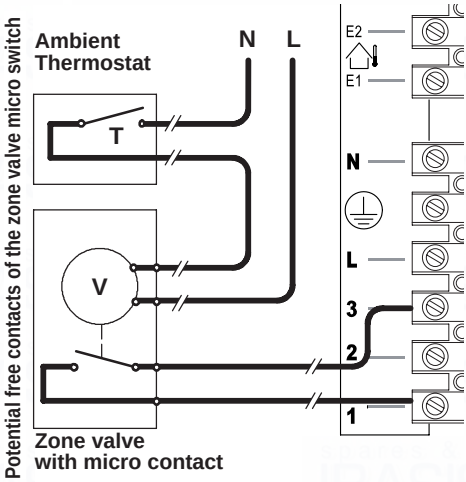

Fig. 6.23

Use the ambient thermostat's clamps indicated in Fig. 6.17 and Fig. 6.18 to connect the zone valve Insert the electric cables of the zone valve's micro switch contacts in clamps “1 and 3” of the ambient thermostat's terminal block as in Fig. 6.18.
Remove the electric jumper between “1 and 3”.

Be careful not to connect powered cables on clamps “1 and 3”.

The route of the boiler and ambient thermostat's electric power supply cable or wires must follow the route indicated in Fig. 6.18. Allow the cables to exit the boiler by using the relevant cable clamps Y (Fig. 6.19).

6.11 External frost protection

- Connect the frost thermostat between terminals 1 and 2 as shown in Fig. 6.24 or Fig. 6.25.

Do not connect live wires to terminals to which the frost thermostat must be connected.

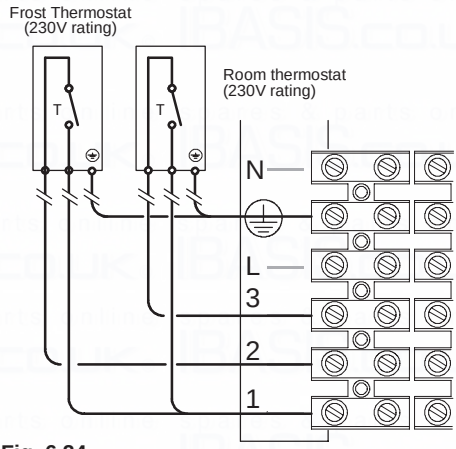

Fig. 6.24

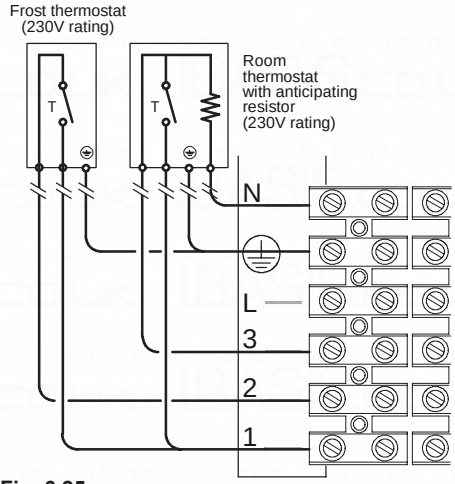

Fig. 6.25

6.12 Installation of the external temperature probe (optional)

The external probe must be installed on the external wall of the building avoiding:

- Direct radiation of solar rays.
- Humid walls or walls subject to the formation of mildew.

- Installation near to fans, drain outlets or chimneys.

6.13 Electric connection between the boiler and the external probe

To connect the external probe to the boiler use electric cables with a section no less than 0.50 mm^2.

The electric cables for connecting the external probe to the boiler must cover different channels to the voltage ones (230 V), since they are powered at a safety low voltage and their maximum length must not exceed 20 meters.

Use the clamps indicated in Fig. 6.26 to connect the external probe.

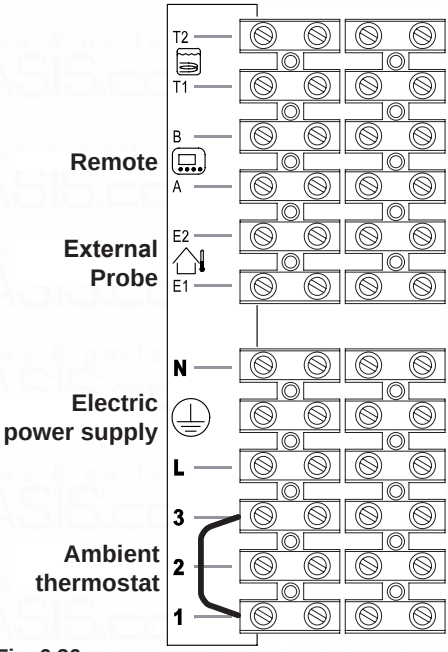

Fig. 6.26

The route of the external probe's connection wires must follow the route indicated in Fig. 6.18.
Allow the cables to exit the boiler by using the relevant cable clamps Y (Fig. 6.19).

6.14 Remote electric connection (optional)

Use the clamps indicated in Fig. 6.26 to connect the remote.

To connect the remote control to the boiler, refer also to the REMOTE CONTROL booklet.

Do not remove the electric jumper connected on the ambient thermostat terminal block between “1 and 3” Fig. 6.26.

The route of the remote control cable must follow the route indicated in Fig. 6.18.
Allow the cables to exit the boiler by using the relevant cable clamps Y (Fig. 6.19).

6.15 Example of hydraulic plants with hydraulic separator (optional)

The hydraulic separator creates a reduced load loss zone that renders the primary circuit and secondary circuit hydraulically independent.
In this case the flow rate that passes through the circuits depends exclusively on the features of the pumps flow rate.
Therefore, by means of a hydraulic separator, the secondary circuit's flow rate is put into circulation only when the relative pump is on.
When the pump of the secondary is off, there is no circulation in the corresponding circuit and therefore, the entire flow rate pushed by the primary is by-passed through the separator.
Thus, with the hydraulic separator, it is possible to have a constant flow rate production circuit and a variable flow rate distribution

circuit.

Hydraulic plant examples

Top zone + low temperature zone.

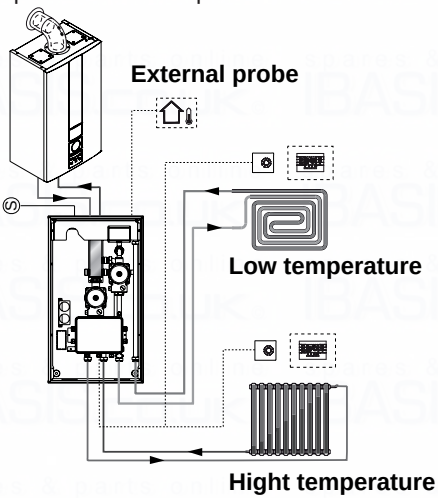

Fig. 6.27

Top zone + 2 low temperature zones.

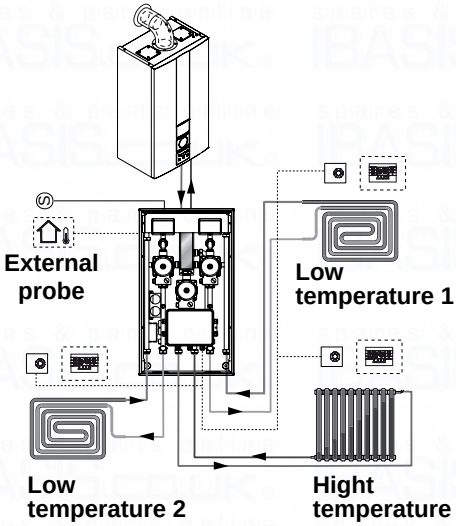

Fig. 6.28

7 COMMISSIONING

7.1 Warnings

The commissioning of this boiler and system must only be undertaken by a Gas Safety registered engineer in accordance with the requirements of the Gas Safe Installation and Use Regulations and be approved by Gas Safe.

Ensure that the Benchmark Checklist is satisfactorily completed during the commissioning process. The Checklist is located at the end of this manual. This manual should be handed to the User following completion of the installation and commissioning process. Failure to comply with these requirements may invalidate the manufacturers guarantee.

For Ireland (IE), it is necessary to complete a "Declaration of Conformity" to indicate compliance to I.S.813.2002.

7.2 Electrical installation

Preliminary electrical system checks to ensure electrical safety shall be carried out by a competent person. i.e. polarity, earth continuity, resistance to earth and short circuit. If a fault has occurred on the appliance the fault finding procedure should be followed as specified in the service manual.

7.3 Gas supply installation

- Inspect the entire installation including the gas meter, test for tightness and purge, all as described in BS 6891;
  For Ireland (IE), refer to I.S.813.2002.
- Open the gas cock 6 (Fig. 7.1) on the appliance and check the gas connector on the appliance for leaks.

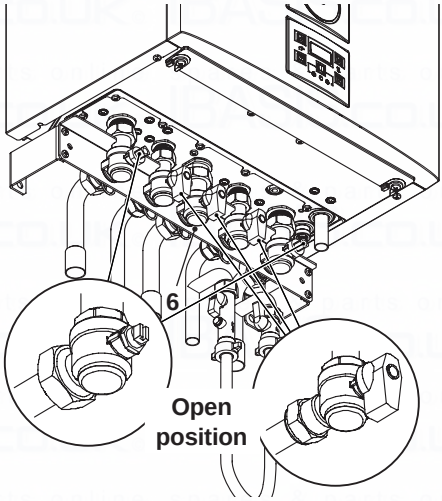

Fig. 7.1

7.4 Filling the d.h.w. system

- Close all hot water draw-off taps.
- Open the valves located in the lower part of the boiler (Fig. 7.1).
- Slowly open each draw-off tap and close it only when clear water, free of bubbles, flows out.

7.5 Initial filling of the system

- Open the c.h. flow and return valves.
- Remove the front and side panels of the case (section "Dismantling the external panels" to page 76) and the sealed chamber lid.
- Unscrew the plug on the automatic air purger valve 27 in Fig. 7.2 and leave open permanently.

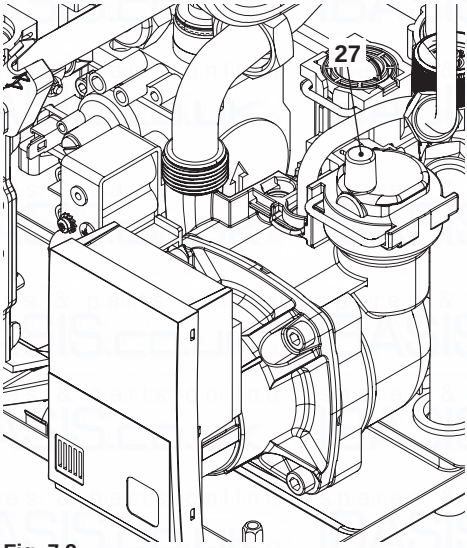

Fig. 7.2

- Before slackening the main condensing breather pipe exchanger 18 in Fig. 7.3 connect a small draining pipe to the hose nozzle to drain water out.

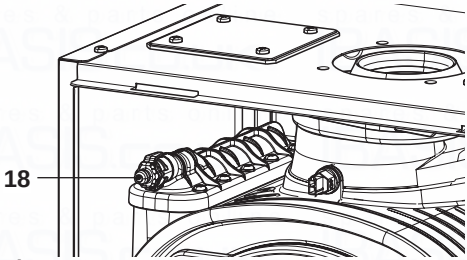

Fig. 7.3

- Gradually open stopcock at the filling point connection to the c.h. system until water is heard to flow; do not open fully.
- Open each radiator air vent starting at the lowest point of the system and close it only when clear water, free of bubbles, flows out.
- Continue filling the system. The actual reading should ideally be 1,3 bar and not less than 0,3 bar.
- Close all air release valves on the c.h. system.
- Inspect the boiler and the system for water tightness and remedy any leaks discovered.
- Cold flush the system to remove any loose particles and any system debris before starting the boiler for the first time.

The flushing procedure must be in line with BS7593:2006 Treatment of Water in d.h.w. c.h. Systems.
When the installation and second filling are completed turn on the c.h. system and run it until the temperature has reached the boiler operating temperature. The system must then be immediately flushed through.
This procedure must be repeated twice more.
During this operation a c.h. flushing detergent must be used in the quantities as specified by the appropriate manufacturer, whose function it is to dissolve any foreign matter which may be in the system.

INHIBITION (Primary Heating Circuit)
On the final refilling of the heating system it is important to ensure the system water is treated with a suitable scale and corrosion inhibitor in accordance with the manufacturers instructions.

Check pump operation/pump release
The pump electronic control circuit automatically releases the pump.

- Electrically power the boiler by switching on the double pole isolation switch. The LCD will display, the symbol (Fig. 7.4).

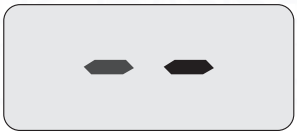

Fig. 7.4

- Press the 14 key for 2 seconds until both and symbols appear on the display (Fig. 7.5).

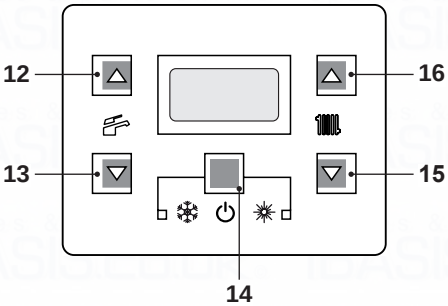

Fig. 7.5

The LCD display displays the boiler temperature (primary circuit) and the and symbols; the °C symbol slowly flashes (Fig. 7.6).

Fig. 7.6

- Make sure that the ambient thermostat is in the “heat demand” position.
- Check that the boiler with the gas cock shut-off goes into ignition lockout (Er01) and, in the meantime, check the pump release.
- The pump release can be verified by checking that the pump motor vibrates.
- If the pump motor does not vibrate, release the boiler from its lockout due to gas failure by pressing the reset button on the control panel and repeat the sequence a maximum of 10 times.
- If the pump does not release, contact technical support.
- Once the pump has been released, open the gas cock and check that the boiler operates correctly both in domestic hot water and heating modes.
- Check the gas pressures and flow rates as shown in section "GAS CONVERSION" to page 74 of this booklet.
- Check that the condensate produced during functioning fills the pipe and is regularly drained in the draining plant pipe.
- Switch off the boiler by pressing the 14 (Fig. 7.5) key for 2 seconds until the symbol appears on the LCD display (Fig. 7.4).

7.6 Condensate pipe and traps

The full length of the condensate pipe should be check for leaks.
Before running the boiler, ensure that the built in condensate trap and any other trap in the drain system is correctly filled with water.

Fill the built in condensate trap by removing the flue elbow and pouring a cupful of water into the flue outlet (Fig. 7.7).

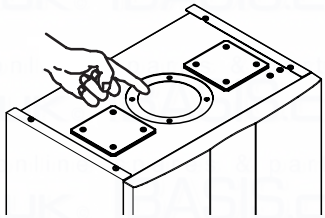

Fig. 7.7

An alternative, to the removal of the flue elbow, pour the water through the flue sampling point (Fig. 7.8).

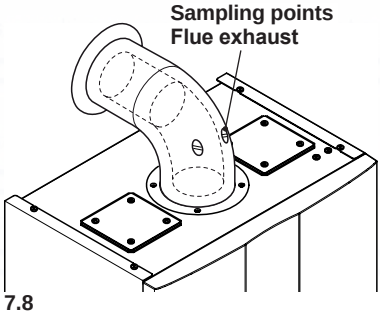

Fig. 7.8

7.7 Checking the gas supply pressure

This boiler has been factory tested to the highest quality control standards and set for the minimum and maximum gas working pressures, connected to a 1 m flue and a gas supply pressure of 20 mbar.
Any variation in gas supply pressure or flue length may result in the customer experiencing a harmonic noise from the boiler. In these circumstances, it may be necessary to reset the burner gas pressures in accordance with section 11 Gas Valve of the Service Manual.
It should be noted that a Flue Gas Analyser is required for this procedure.

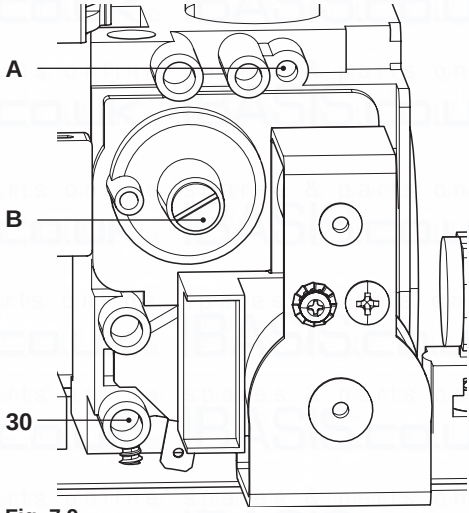

Fig. 7.9

7.8 Checking the inlet pressure

- Remove the boiler body's front panel, see section "Dismantling the external panels" to page 76.
- When the boiler is switched off (out of order), check the supply pressure by using the 30 point in Fig. 7.9 and compare the value read with that reported on the Gas supply pressure table in the "Technical Data" section (pag. 26 Advance Plus 25C ERP, pag. 30 Advance Plus 30C ERP and pag. 34 Advance Plus 35C ERP).
- Close well the pressure point 30 in Fig. 7.9.

If it does not comply with the required pressure check the gas supply line and governor for faults and/or correct adjustment.

Where the boiler is connected to a gas supply which has a zero set governor then it is necessary under the Gas Safe (Installation and Use) Regulations 26.9. to perform a combustion analysis test for CO/CO_2 (The limits for the boiler is given in "Technical Data" section pag. 26 Advance Plus 25C ERP, pag. 30 Advance Plus 30C ERP and pag. 34 Advance Plus 35C ERP: CO_2 contents / other flue gas figures) and complete the Certificate of Exemption section of the Benchmark.

Important: after the checks all of the test points must be sealed.

7.9 Lighting the boiler

Some products incorporate an anti cycling time delay. It is normal when first switching the boiler on for the boiler to operate on heating for a few seconds then switch off. After 3-4 minutes has elapsed the boiler will

then re ignite and operate perfectly normally. The ignition delay cycle does not prevent normal operation of the boiler to provide d.h.w.

If external controls are fitted (e.g. Timeclock, room thermostat) ensure they ”call for heat”.

- Electrically power the boiler by switching on the double pole isolation switch. The LCD will display, the symbol (Fig. 7.10).

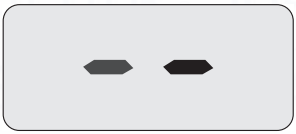

Fig. 7.10

- Press the 14 key for 2 seconds until both and symbols appear on the display Fig. 7.11.

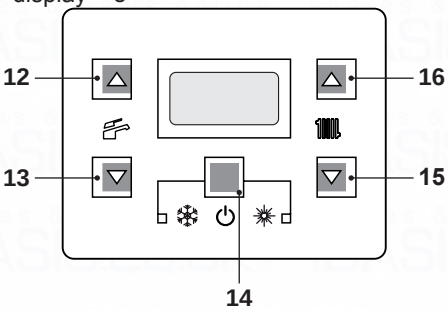

Fig. 7.11

The LCD display displays the boiler temperature (primary circuit) and the and symbols; the °C symbol slowly flashes Fig. 7.12.

Fig. 7.12

- Open the gas cock
- Make sure that the ambient thermostat is in the “heat request” position”.
- Check the correct functioning of the boiler both in domestic hot water mode and in heating mode.
- Check the gas pressures and flow rates as shown in section "GAS CONVERSION" to page 74 of this booklet.
- Check that the condensate produced during functioning fills the pipe and is regularly drained in the draining plant pipe.
- Switch off the boiler by pressing the 14 (Fig. 7.11) key for 2 seconds until the symbol appears on the LCD display (Fig. 7.10).

The boiler will now go through an ignition sequence and the burner will light.
If after four ignition attempts (about four minutes) the boiler does not function and a code that alternates between the letter **Er** and the writing **RESET** appear on the LCD display, it indicates that the safety lock-out has stopped the boiler. The display background flashes (Fig. 7.13).

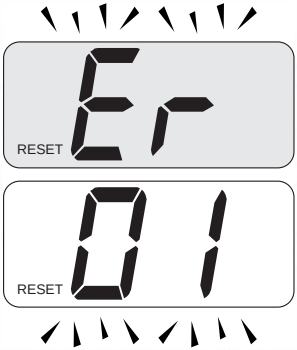

Fig. 7.13

Press the reset key on the boiler control panel 14 (Fig. 7.11) to reset its functioning.

For the first lighting up and following maintenance procedures for the gas supply, it may be necessary to repeat the resetting operation several times so as to remove the air present in the pipework.

After five consecutive resetting attempts the reset button is inhibited. To restore its function it is necessary to switch the boiler off and on from the electrical mains, using the fused spur isolation switch fitted adjacent to the appliance.

7.10 Enabling functioning of the external temperature probe by the remote control

Functioning with the external probe in the boiler must be enabled if the remote control (optional) is used.
Act on the programming of the REMOTE control to enable its functioning if the remote control (optional) is used.

- Press button i for more than 3 seconds to enter in INFO mode.

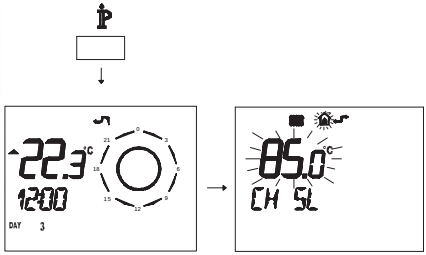

Fig. 7.14

Press buttons DAY and ⏻ at the same time to enter the transparent programming (Fig. 7.15).

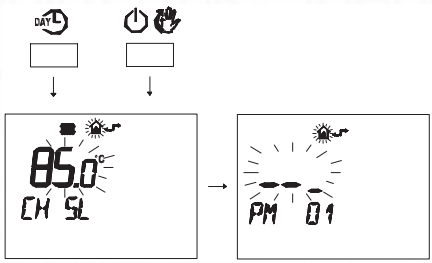

Fig. 7.15

- Press buttons ▼ or ▲ to display the **"PM15"** program that enables the external probe (Fig. 7.16).

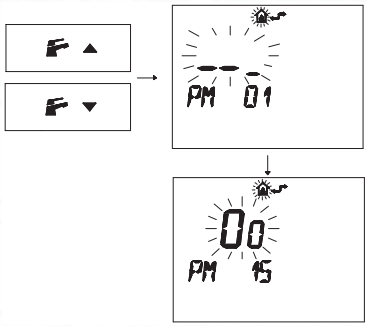

Fig. 7.16

- Modify the programmed SET by acting on buttons ▲ or ▼ until **a setting of 60** is displayed, wait for the number programmed to flash (Fig. 7.17).

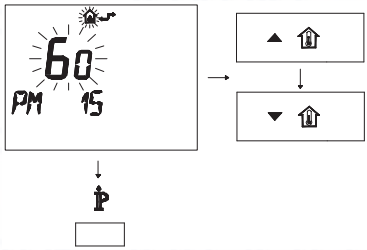

Fig. 7.17

- To exit programming, press button i.

7.11 Setting the K coefficient of the external temperature probe

The boiler is set with a K coefficient equal to zero for boiler functioning without the probe connected.

If the boiler is **NOT EQUIPPED** with the remote control (optional) refer to Fig. 7.18.

INSTALLATION

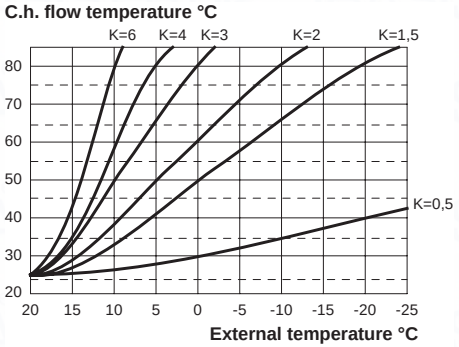

Fig. 7.18

If the boiler is **EQUIPED** with the remote control (optional) refer to Fig. 7.19.
In this case K setting must be done from the remote control.

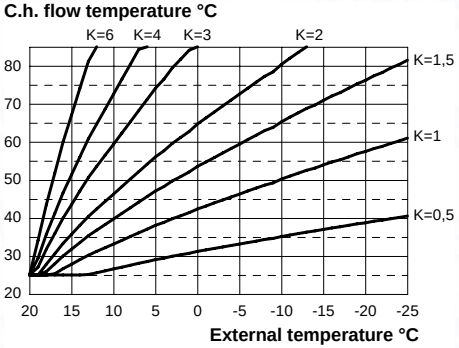

Fig. 7.19

The K coefficients is a parameter that increases or reduces the boiler flow temperature when the outside temperature changes. When installing the external probe it is necessary to set this parameter based on the efficiency of the heating plant in order to optimise the flow temperature (Fig. 7.19).
E.g. In order to have a flow temperature at the heating plant of 60°C with an external temperature of -5°C, set a K at 1.5 (sectioned line in Fig. 7.19).

Sequence for setting the K coefficient

- Enter in "programming mode" by pressing keys 14 - 15 - 16 (Fig. 7.20) for 10 seconds at the same time until the letters **Pr** that alternate with code 01 are displayed on the LCD display, indicating that "parameter **01**", has been activated (Fig. 7.21).

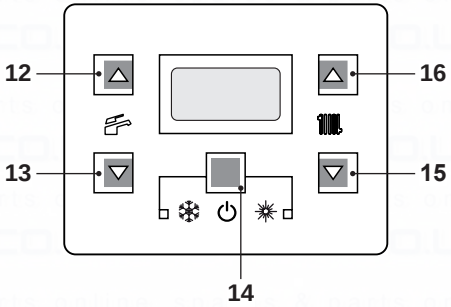

Fig. 7.20

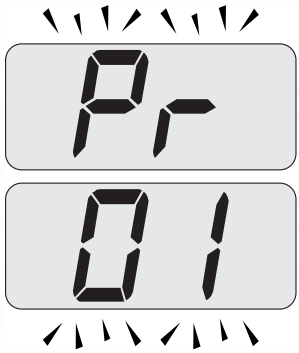

Fig. 7.21

- Scroll the various parameters using keys 15 or 16 until the letters **Pr** that alternate with code **15** are displayed on the LCD display, indicating that "parameter 15" (Fig. 7.22) has been activated.

INSTALLATION

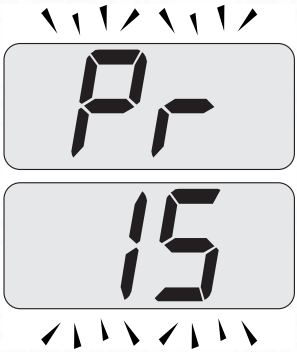

Fig. 7.22

- Press keys 14 and 16 (Fig. 7.20) at the same time until the value of parameter 15 (Fig. 7.23) is displayed on the LCD display.

Fig. 7.23

- Using keys 15 or 16 it is possible to change the value of parameter 15 from a minimum of **01** to a maximum of **60** based on the selected bend of the K coefficient in Fig. 7.19 (the value read on the display corresponds to K coefficients decimal values).
- By pressing key 14 (Fig. 7.20) confirmation of the inserted value is obtained.
- Press keys 14 and 15 (Fig. 7.20) at the same time to exit without changing the value (return to the parameters list Fig. 7.22).
- Press keys 14 - 15 - 16 (Fig. 7.20) at the same time for 10 seconds to exit the "programming mode".

At this point the plant flow temperature will follow the trend in relation to the K coefficient set.
However, if the ambient temperature is not comfortable, the flow temperature of the heating plant can be increased or reduced by ± 15°C by acting on keys 15 (reduce) and 16 (increase) (Fig. 7.20).

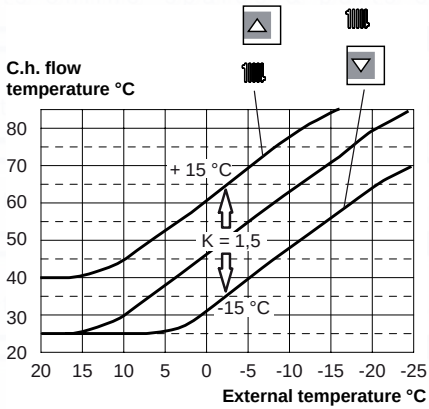

Fig. 7.24

The temperature trend when changing the setting made with keys 15 and 16 for a **K 1,5** is shown in Fig. 7.24.

<u>Sequence for setting the K coefficient with the remote control connected</u>

Act on the programming of the REMOTE control to select the setting of the K coefficient.

- Electrically feed the boiler by activating the bipolar switch envisioned during installation.
- Press button IP for more than 3 seconds to enter in INFO (Fig. 7.25) mode.

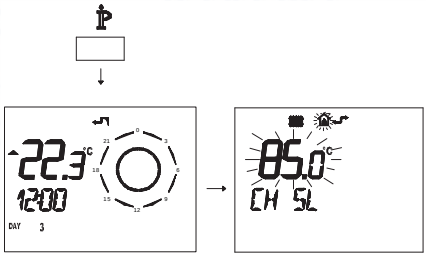

Fig. 7.25

INSTALLATION

Press button OK to display the **K REG** window (Fig. 7.26).

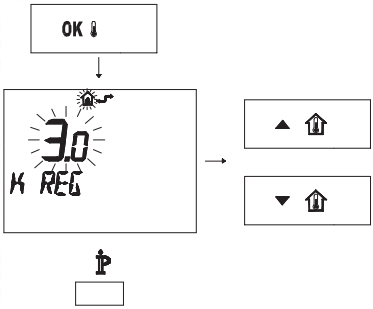

Fig. 7.26

It is possible to change the value using buttons ▲ and ▼.
Press button P to exit from mode INFO (Fig. 7.26).

7.12 Setting the pump post-circulation

The pump, in heating function, is set for a post-circulation of about one minute at the end of each heat request.
This time can be changed by a minimum of zero to a maximum of four minutes by acting on programming both from the panel controls and the remote control.

- Enter in "programming mode" by pressing keys 14 - 15 - 16 (Fig. 7.27) for 10 seconds at the same time until the letters **Pr** that alternate with code **01** are displayed on the LCD display, indicating that "parameter 01" (Fig. 7.28) has been activated.

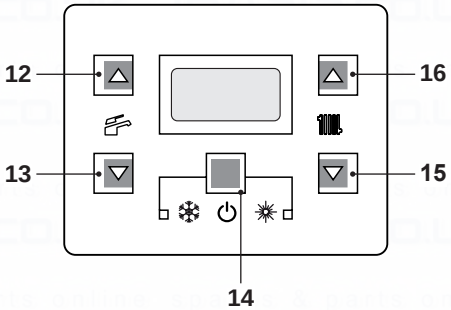

Fig. 7.27

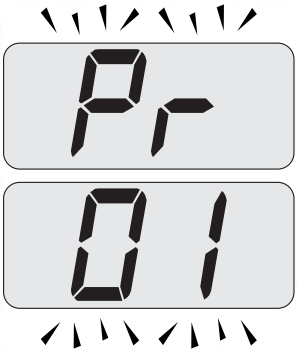

Fig. 7.28

- Scroll the various parameters using keys 15 or 16 until the letters **Pr** that alternate with code **11** are displayed on the LCD display, indicating that "parameter 11" (Fig. 7.29) has been activated.

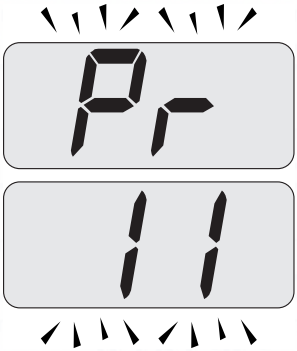

Fig. 7.29

- Press keys 14 and 16 (Fig. 7.27) at the

INSTALLATION

same time until the value of parameter 11 (10=60 seconds) (Fig. 7.30) is displayed on the LCD display .

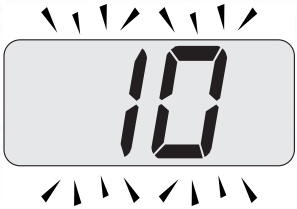

Fig. 7.30

- It is possible to modify parameter 11 by **00=**0s to **99=**600s using keys 15 or 16 (each increase or reduction by a unit on the display corresponds to 6 seconds).
- By pressing key 14 (Fig. 7.27) confirmation of the inserted value is obtained.
- Press keys 14 and 15 (Fig. 7.27) at the same time to exit without changing the value (return to the parameters list Fig. 7.29).
- Press keys 14 - 15 - 16 (Fig. 7.27) at the same time for 10 seconds to exit the "programming mode".

Programming using the REMOTE control

- Press button for more than 3 seconds to enter in INFO mode (Fig. 7.31).

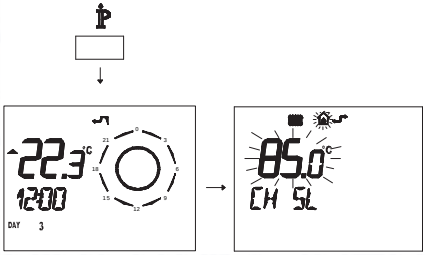

Fig. 7.31

- Press buttons and at the same time to enter transparent programming (Fig. 7.32).

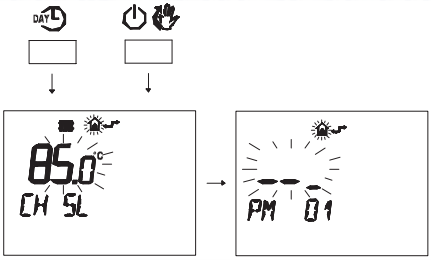

Fig. 7.32

- Press buttons ▼ or ▲ to display the **"PM11"** program of the pump post-circulation (Fig. 7.33).

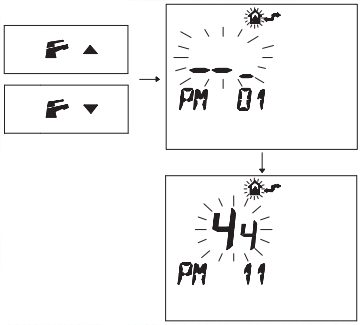

Fig. 7.33

- To modify the programmed SET, act on buttons ▲ or ▼ and wait for the programmed number to flash (Fig. 7.34). Each step increased or decreased corresponds to 1 second.

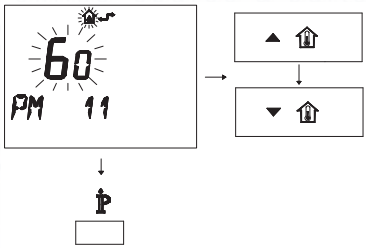

Fig. 7.34

- To exit programming, press button .

INSTALLATION

7.13 Selecting the reignition frequency

When the boiler functions in normal on/off heating mode, the minimum time between two ignitions is set at three minutes (re-ignition frequency).
This time can be changed by a minimum of zero to a maximum of eight and a half minutes by acting on programming both from the panel controls and the remote control.

- Enter the "programming mode" by pressing keys 14 - 15 - 16 (Fig. 7.35) for 10 seconds at the same time until the letters **Pr** that alternate with code **01** are displayed on the LCD display, indicating that "parameter 01" (Fig. 7.36) has been activated.

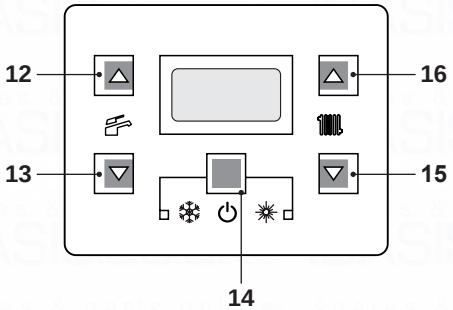

Fig. 7.35

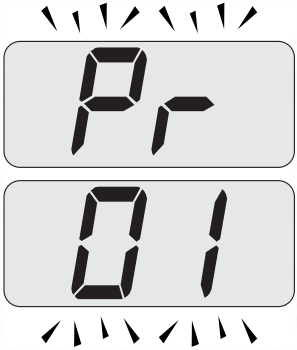

Fig. 7.36

- Scroll the various parameters using keys 15 or 16 until the letters **Pr** that alternate with code **10** are displayed on the LCD display, indicating that "parameter 10" (Fig. 7.37) has been activated.

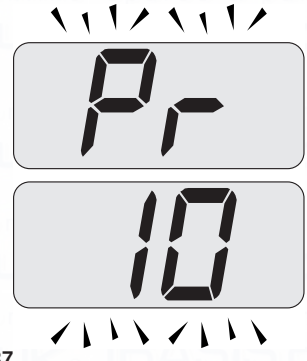

Fig. 7.37

- Press keys 14 and 16 (Fig. 7.35) at the same time until the value of parameter 10 (30=180 seconds) is displayed on the LCD display (Fig. 7.38).

Fig. 7.38

- It is possible to modify parameter 10 by **00=**0s to **99=**600s using keys 15 or 16(each increase or reduction by a unit on the display corresponds to 6 seconds).
- By pressing key 14 (Fig. 7.35) confirmation of the inserted value is obtained.
- Press keys 14 and 15 (Fig. 7.35) at the same time to exit without changing the value (return to the parameters list Fig. 7.37).
- Press keys 14 - 15 - 16 (Fig. 7.35) at the same time for 10 seconds to exit the "programming mode".

Programming using the REMOTE control

Act on the programming of the REMOTE

control to select a minimum time between two ignitions when the boiler functions in normal on/off heating mode.

- Press button for more than 3 seconds to enter in INFO mode (Fig. 7.39).

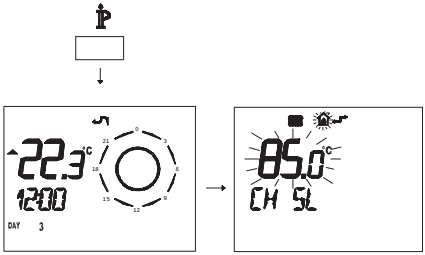

Fig. 7.39

- Press buttons DAY and at the same time to enter transparent programming (Fig. 7.40).

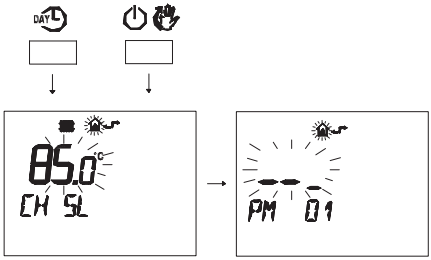

Fig. 7.40

- Press buttons ▼ or ▲ to display the "**PM10**" program for selecting the ignition frequency (Fig. 7.41).

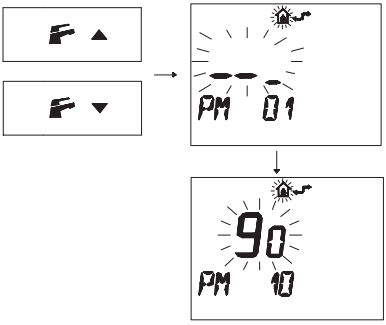

Fig. 7.41

In Fig. 7.41 a SET programmed at **90** is displayed corresponding to a re-ignition time of about 3 minutes.
The adjustment field is from 0 to 8 and half minutes.
Each step increased or decreased corresponds to 2 seconds.

- To modify the programmed SET, act on buttons ▲ or ▼ and wait for the number programmed to flash (Fig. 7.42).

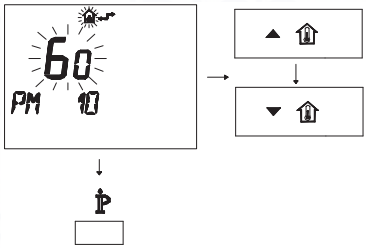

Fig. 7.42

- To exit programming, press button .

7.14 Checking the ignition device

With the burner on high flame close the gas cock.
After four ignition attempts (about four minutes) the boiler does not function and a code that alternates between the letter **Er** and the writing **RESET** appear on the LCD display, it indicates that the safety lock-out has stopped the boiler. The display background flashes (Fig. 7.43).

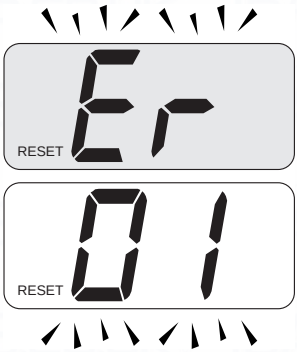

Fig. 7.43

Press the reset key on the boiler control panel 14 to reset its functioning.

7.15 Checking the flue system

The flue system should be visually checked for soundness. Check all clamps, gaskets and fixing are secure and tight.
Ensure that the flue terminal is sited correctly in accordance with the flue fitting instructions and Fig. 5.1 on page 39 of this manual.
To carry out a combustion check refer to the instructions given in the section "Combustion analysis check" to page 80 of this manual.
Reference figures are given in the "Technical Data" section page. 26 of this manual (Flue gas figures).

7.16 Checking the condensate drain pipe

Check the soundness and integrity of the condensate drain pipe.
Verify the cleanness and correct filling of the condensate traps.

7.17 Instructing the user

Hand over this combined User & Installation manual and the Service manual to the end user and explain how to use the unit in both c.h. and d.h.w. modes.

Take the User step by step through the lighting instructions.
Show the User how to switch off the appliance quickly and indicate the position of the electric supply isolator.
Explain the proper use and adjustment of all system controls; this will ensure the greatest possible fuel economy.
Explain the function and use of the function selector.
Explain and demonstrate the function of time and temperature controls (if fitted).
Explain how to turn off the appliance for both short and long periods and advise on the precautions necessary to prevent damage should the appliance be inoperative when freezing conditions may occur.
Fill in the details required on the Boiler Guarantee Certificate and hand to the User advising them to return the correct section for boiler Guarantee registration.
Finally, advise the User that, for continued safe and efficient operation, the appliance must be serviced by a competent person at least once a year.
The user is responsible for keeping the documentation integral and within reach for consultation.

7.18 Adjustment of useful c.h. output

The following procedure allows the output of the boiler for central heating to be adjusted to meet the system requirement. Adjusting the useful central output does not prevent the boiler firing at maximum rate for domestic hot water production.
Refer to Fig. 7.44 and determine the correct Value appertaining to the output required for the central heating requirement.

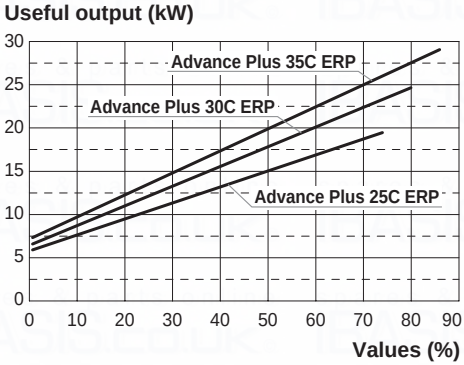

Fig. 7.44

- Enter the ”programming mode” by pressing keys 14 - 15 - 16 (Fig. 7.45) for 10 seconds at the same time until the letters **Pr** that alternate with code **01** are displayed on the LCD display, indicating that ”parameter 01” (Fig. 7.46) has been activated.

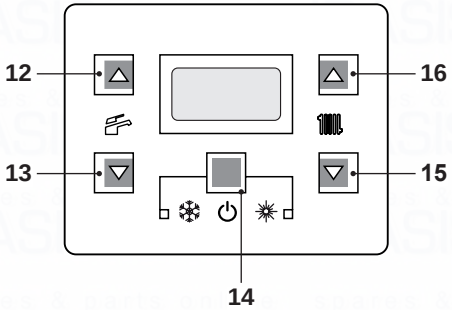

Fig. 7.45

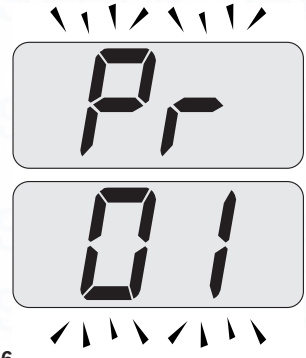

Fig. 7.46

- Scroll the various parameters using keys 15 or 16 until the letters **Pr** that alternate with code **12** are displayed on the LCD display, indicating that "parameter 12" (Fig. 7.47) has been activated.

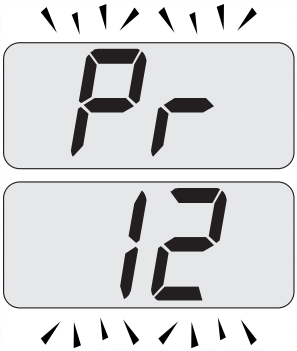

Fig. 7.47

- Press keys 14 and 16 (Fig. 7.45) at the same time until the value of parameter 12 (74=Advance Plus 25C ERP or 78=Advance Plus 30C ERP or 84=Advance Plus 35C ERP) is displayed on the LCD display (Fig. 7.48).

Fig. 7.48

- It is possible to modify parameter using keys 15 or 16 (Fig. 7.45) (Refer to Fig. 7.44 and determine the correct Value appertaining to the output required for the central heating requirement.).
- By pressing key 14 (Fig. 7.45) confirmation of the inserted value is obtained.
- Press keys 14 and 15 (Fig. 7.45) at the same time to exit without changing the value (return to the parameters list Fig. 7.47)

- Press keys 14 - 15 - 16 (Fig. 7.45) at the same time for 10 seconds to exit the "programming mode".

7.19 Setting record

Important: at the end of the setting operation it is important to fill/update the table (Fig. 7.49).
This to allow a correct setting of this boiler in case of replacement of the main control p.c.b.

PARAMETER	DIGIT	VALUES
Boiler type (to be updated with the complete range)	**Pr 01**	
Not used	**Pr 02**	----------
Pump speed	**Pr 03**	
Not used	**Pr 04**	----------
Gas type	**Pr 05**	
Not used	**Pr 06**	----------
C.h. flow max temperature °C	**Pr 07**	
Factory parameters reset	**Pr 08**	
Chimney sweep function	**Pr 09**	
C.h. reignition frequency	**Pr 10**	
C.h. pump post-circulation	**Pr 11**	
Max. useful output in c.h. mode	**Pr 12**	
C.h. pump working type	**Pr 13**	
Ignition power	**Pr 14**	
K value (external probe diagram)	**Pr 15**	
Not used	**Pr 16**	
D.h.w. burner turn off function	**Pr 17**	
NTC on the c.h. return	**Pr 18**	
LCD type	**Pr 19**	
Not used	**Pr 20**	----------
Not used	**Pr 21**	----------
Not used	**Pr 22**	----------
Not used	**Pr 23**	----------
Not used	**Pr 24**	----------
Not used	**Pr 25**	----------
Not used	**Pr 26**	----------
C.h. minimum set-point	**Pr 27**	
Maintenance intervals	**Pr 28**	
NTC inlet probe	**Pr 29**	
Correct pressure c.h. system	**Pr 30**	

Fig. 7.49

- Enter the ”programming mode” by pressing keys 14 - 15 - 16 (Fig. 7.50) for 10 seconds at the same time until the letters **Pr** that alternate with code **01** are displayed on the LCD display, indicating that ”parameter 01” (Fig. 7.51) has been activated.

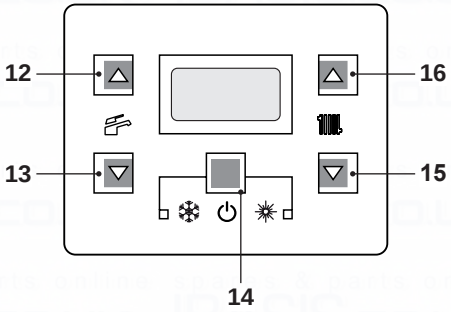

Fig. 7.50

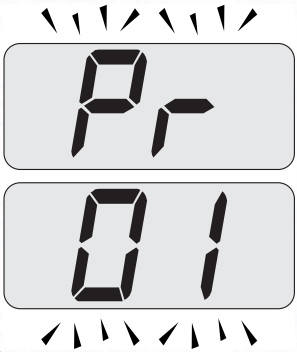

Fig. 7.51

- Press keys 14 and 16 (Fig. 7.50) at the same time until the value of parameter 01 (35=Advance Plus 25C ERP or 36=Advance Plus 30C ERP or 37=Advance Plus 35C ERP) is displayed on the LCD display (Fig. 7.52).

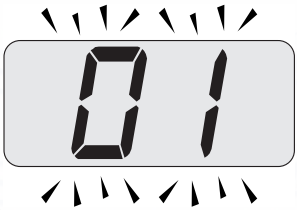

Fig. 7.52

- Press keys 14 and 15 (Fig. 7.50) at the same time to exit without changing the value (return to the parameters list Fig. 7.51).

- Scroll the various parameters using keys 15 or 16 until the letters **Pr** that alternate with code **02** are displayed on the LCD display, indicating that ”parameter 02” has been activated.

- Repeat all the above setting sequences in order to visualize the parameters and their values.

- Set the following parameter:

PARAMETER	LCD	VALUE
Pump speed	**Pr 03**	00
NTC on the c.h. return	**Pr 18**	00
LCD type	**Pr 19**	02
NTC inlet probe	**Pr 29**	00

- Press keys 14 - 15 - 16 (Fig. 7.50) at the same time for 10 seconds to exit the ”programming mode”.

8 GAS CONVERSION

8.1 Warnings

The commissioning of this boiler and system must only be undertaken by a Gas Safety Registered Engineer, qualified to work on Liquefied Petroleum Gas (LPG) in accordance with the requirements of the Gas Safe Installation and Use Regulations.
Components used to adapt it to the type of gas available must be genuine parts only.
Factory setting = Natural gas.

8.2 Operations and gas setting

Check that the gas cock mounted on the gas piping to the boiler is closed and that the appliance is not powered.

- Remove the body's front panel and turn the control panel as shown in section "MAINTENANCE" to page 76.
- Unscrew the connector C, remove the fixing fork A and remove the pipe B (Fig. 8.1).

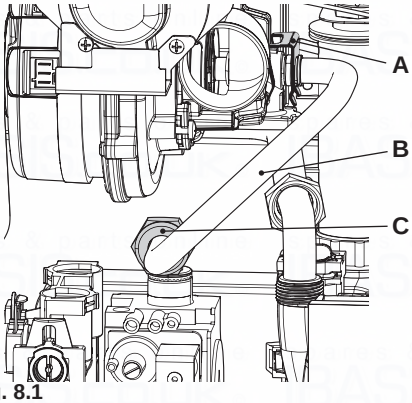

Fig. 8.1

- Carry out gas conversion by correctly replacing the gas restrictor (Fig. 8.2), referring to the "Technical Data" section page 26 (Advance Plus 25C ERP), page 30 (Advance Plus 30C ERP) and page 34 (Advance Plus 35C ERP).

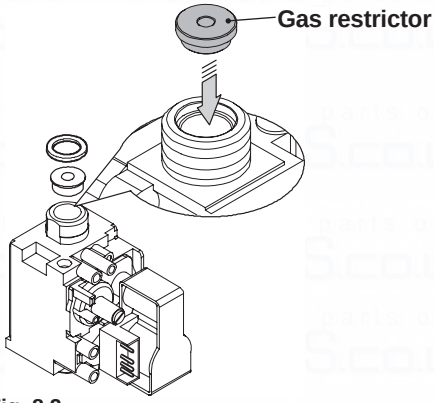

Fig. 8.2

Attention, to reassemble repeat the operations carried out in reverse order. Be careful not to damage the OR gasket of the gas pipe when inserting the pipe in the air box (air/gas mixer). After any service operation on the components of the gas circuit check all the connections for gas tightness.

The factory boiler is set for functioning with Natural gas (G20).

To set the functioning of the boiler with **LPG (G31)** gas, carry out the following settings:

- Enter in "programming mode" by pressing keys 14 - 15 - 16 (Fig. 8.3) for 10 seconds at the same time until the letters **Pr** that alternate with code **01** are displayed on the LCD display, indicating that "parameter 01" (Fig. 8.4) has been activated.

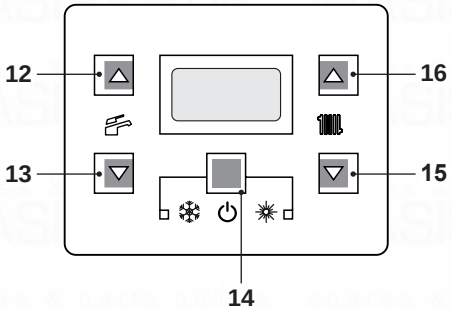

Fig. 8.3

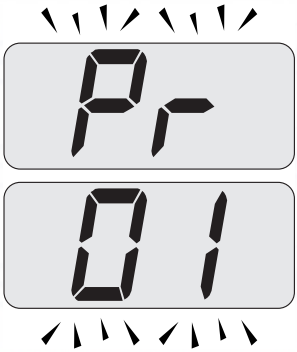

Fig. 8.4

- Scroll the various parameters using keys 15 or 16 until the letters **Pr** that alternate with code **05** are displayed on the LCD display, indicating that "parameter 05" (Fig. 8.5) has been activated.

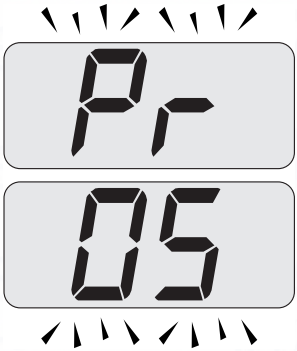

Fig. 8.5

- Press keys 14 and 16 (Fig. 8.3) at the same time until the value of parameter 05 (00=G20) is displayed on the LCD display (Fig. 8.6).

Fig. 8.6

- By pressing key 16 three times, it is possible to change the value of parameter 05 from **00**=G20 to **05**=G31, which is ok for LPG gas.
- By pressing key 14 (Fig. 8.3) confirmation of the inserted value is obtained.
- Press keys 14 and 15 (Fig. 8.3) at the same time to exit without changing the value (return to the parameters list Fig. 8.5).
- Press keys 14 - 15 - 16 (Fig. 8.3) at the same time for 10 seconds to exit the "programming mode".
- Calibrate the gas valve according to the instructions given in the Service manual, section Gas valve - Adjustment.
- Reposition the controls panel and remount the front panel of the body.
- Apply the label indicating the gas nature and pressure value for which the appliance is regulated. The self adhesive label is contained in the transformation kit.

9 MAINTENANCE

9.1 Warnings

The procedures detailed in this chapter **must be carried out only by a Gas Safety Registered Engineer**. Thus you are advised to contact an Authorised Service Agent.

For Ireland (IE), the servicing work must be carried out by a competent Person.

For efficient and continuous operation of the boiler you are advised to have, at least once a year, maintenance and cleaning done by an Approved Service Engineer.

Isolate the appliance from the electricity supply by turning off the fused spur isolation switch adjacent to the appliance and turn off the gas cock, before carrying out any procedures, whatsoever, for cleaning, maintenance, opening or dismantling boiler panels. The Engineer should complete the Service Interval Record at the back of the manual.

9.2 Dismantling the external panels

Front panel

- Unscrew screws A and remove the front panel D by pulling it and pushing it towards the top so that it is freed from the top housings (Fig. 9.1 and Fig. 9.2).

Side panels

Loosen screws "B - F" and "C - H" in Fig. 9.1 and remove the two side panels E and G by pulling towards the outside.

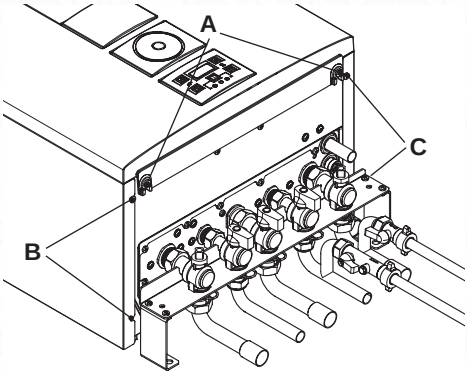

Fig. 9.1

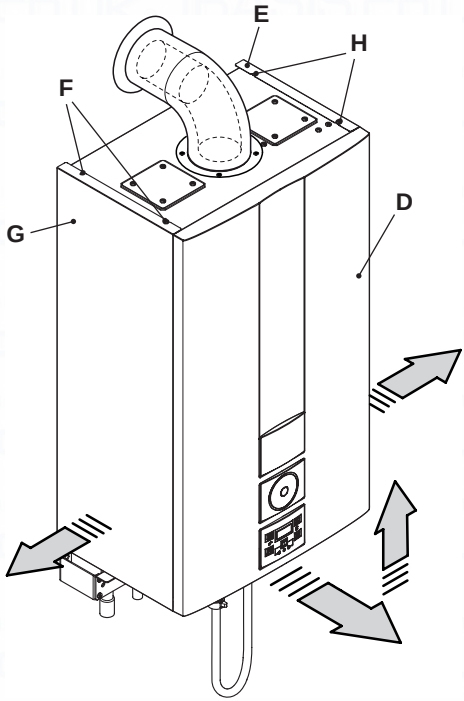

Fig. 9.2

Control panel

Turn the controls panel I, as shown in figure Fig. 9.3, to access in an optimal manner the components inside the boiler.

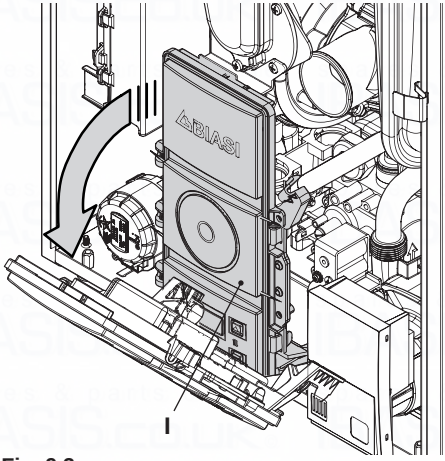

Fig. 9.3

9.3 Reassembly the external panels

Side panels

Fit the external panels E and G in the reverse order to that described on section "Dismantling the external panels" to page 76.

Front panel

- Fit the front panel D, hooking it on the upper side.
- Push the spring towards the internal side of the boiler and simultaneously push the front case panel D until it is completely hold in place (Fig. 9.4) step 1-2.
- Repeat the same operation on the opposite side of the front panel D, (Fig. 9.4) step 3-4.
- Ensure that the front panel edge is close-fitting to the side panels.
- Lock in place the panel D with the appropriate screws A (Fig. 9.1.

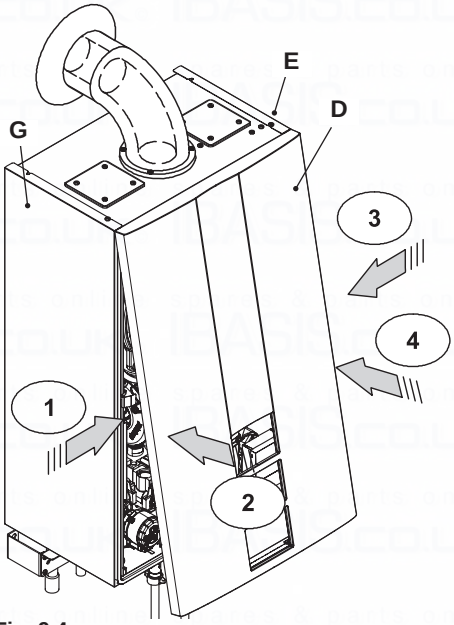

Fig. 9.4

9.4 Emptying the d.h.w. system

- Turn off the d.c.w .inlet isolating valve 7 (Fig. 9.5).

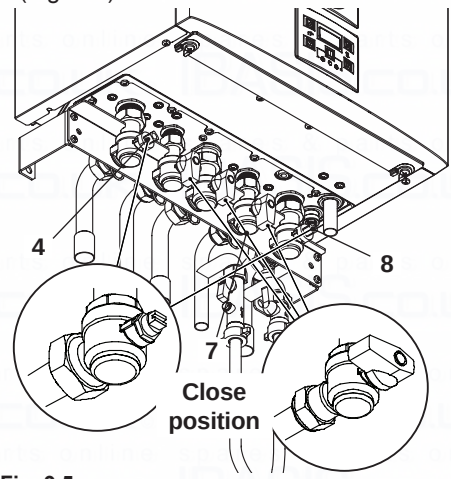

Fig. 9.5

- Turn on the hot water taps and any drain

cocks.

9.5 Emptying the c.h. system

- Close the c.h. isolating valves (4 and 8 in Fig. 9.5).
- Loosen the central heating drain cock 10 indicated in Fig. 9.6.

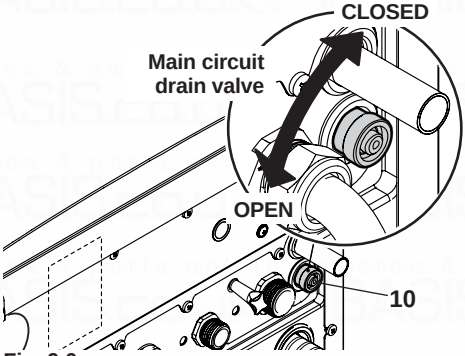

Fig. 9.6

- To make draining easier, lift the plug 27 of the automatic relief valve in Fig. 9.7. To help the draining of the primary circuit loose the condensing heat exchanger air purger valve 18 in Fig. 9.8.

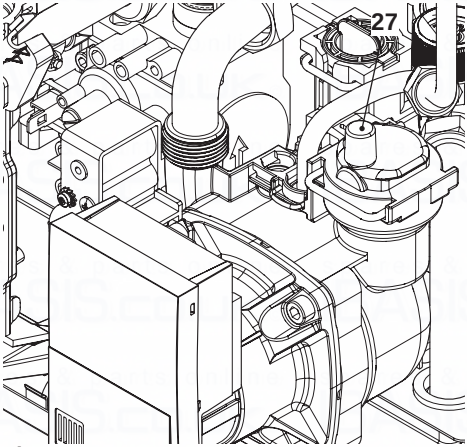

Fig. 9.7

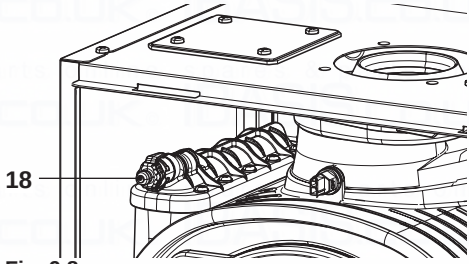

Fig. 9.8

9.6 Cleaning the condensing primary exchanger and the burner

Removing the fan burner unit 41 in Fig. 9.9.

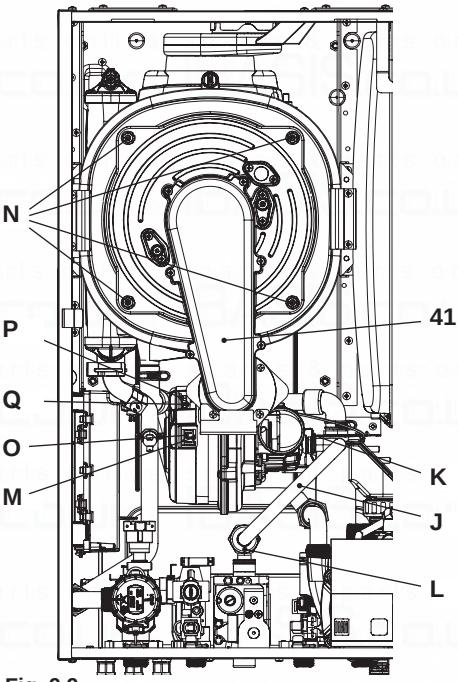

Fig. 9.9

- Remove the body's front panel and turn the controls panel (see "Dismantling the external panels" to page 76).
- Unscrew the connector L, remove the fixing fork K and remove the pipe J.

- Unhook the silencer pipe.
- Insert a flat screwdriver in the connector recess M and lever towards the bottom, disconnect the connector at the same time O by pulling towards the front O (Fig. 9.9).
- Disconnect the fan connector P by pressing the plastic hook Q positioned at the bottom part of the connector (Fig. 9.9).
- Unscrew screws N and remove the fan burner unit 41 (Fig. 9.9)
- Extract the burner casing by pulling it outwards.

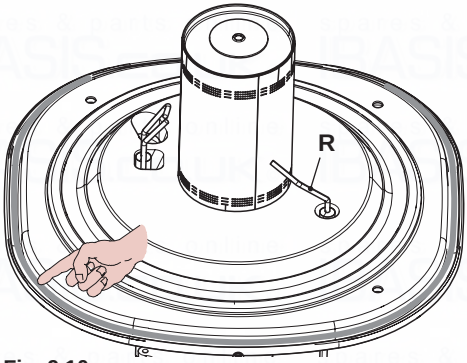

Fig. 9.10

- The detection electrode R in Fig. 9.10 also functions as a sensor for the correct drainage of the condensate.
  Should the mentioned electrode come into contact with the condensate water present within the combustion chamber it sends the boiler into safety lockout. Therefore, should the insulation be wet or deteriorated, provide for the substitution of the same.

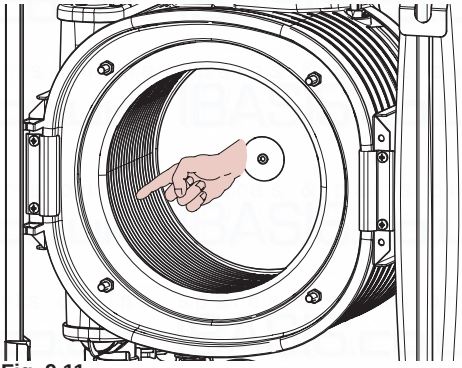

Fig. 9.11

If the condensate primary exchanger elements are dirty (notable only after removing the burner body), brush them using a bristle brush and remove the dirt using a suction device.

The burner does not require any particular maintenance, just remove dust using a bristle brush.
More specific maintenance will be valuated and carried out by an Authorised Assistance Centre Technician.

Caution: After any periodical servicing or disturbance the combustion chamber silicon seal Fig. 9.10 and the Air-gas duct gasket (Fig. 9.12) must be fully inspected and replaced at the discretion of the service engineer.
After any disturbance to the chamber door seal the appiance must undergo a full analytical combustion performance check.

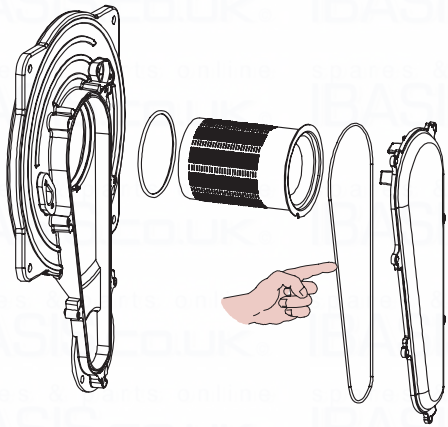

Fig. 9.12

Attention, to reassemble repeat the operations carried out in reverse order. Be careful not to damage the OR gasket of the gas pipe when inserting the pipe in Air box.
After any service operation on the components of the gas circuit check all the connections for gas leaks.

9.7 Check the pressure of the heating expansion vessel

Drain the heating circuit as described in section "Emptying the c.h. system" to page 78 and check that the expansion vessel pressure is not less than 1 bar.
If the pressure is less, see to correct pressurisation.

9.8 Cleaning the domestic hot water exchanger

Descaling the domestic hot water exchanger will be valued by an approved Service Engineer, who will carry out any cleaning using specific products.

9.9 Checking the flue expulsion pipe

Have the integrity of the flue outlet pipe air intake pipe, checked periodically, at least once a year. For all the above maintenance operations it is advisable to call an approved Service Engineer.

9.10 Combustion analysis check

It is recommended that a combustion analysis check is made. Remove the plug as indicated in Fig. 9.13 and carry out combustion analysis check and adjustment if necessary as described in the section Gas valve - Adjustment of the Service manual.

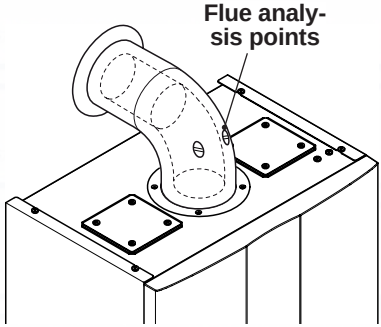

Fig. 9.13

- Activate the “chimney sweep function” at maximum heating power (see "Setting the boiler chimney sweep function" on pag. 82).
- Make sure that the ambient thermostat is in the position “call for heat”.
- Withdraw an abundant amount of d.h.w. by opening the faucets.
- Check the combustion of the boiler using the outlets located on the flue tubes (Fig. 9.13) and compare the data measured with that following.

Model Advance Plus 25C ERP		
Nominal heat input (A) (E)	kW	20,0
Nominal efficency	%	97,4
Combustion efficency	%	97,6
Air index	n	1,2
Flue gas CO_2 content	%	9,2 - 9,8
Flue gas O_2 content	%	3,9
Flue gas CO content	ppm	139
Flue gas temperature	°C	76,0

Values refer to tests with a an 80 mm double exhaust split by 1 + 1 m and natural gas G20 and a supply / return heating temperature of 60°/80°C.

Fig. 9.14

Model Advance Plus 30C ERP		
Nominal heat input (A) (E)	kW	25,0
Nominal efficency	%	97,4
Combustion efficency	%	98,2
Air index	n	1,2
Flue gas CO_2 content	%	9,2 - 9,8
Flue gas O_2 content	%	3,9
Flue gas CO content	ppm	75
Flue gas temperature	°C	74,0

Values refer to tests with a an 80 mm double exhaust split by 1 + 1 m and natural gas G20 and a supply / return heating temperature of 60°/80°C.

Fig. 9.15

Model Advance Plus 35C ERP		
Nominal heat input (A) (E)	kW	30,0
Nominal efficency	%	98,2
Combustion efficency	%	98,3
Air index	n	1,2
Flue gas CO_2 content	%	9,2 - 9,8
Flue gas O_2 content	%	3,9
Flue gas CO content	ppm	160
Flue gas temperature	°C	81,6

Values refer to tests with a an 80 mm double exhaust split by 1 + 1 m and natural gas G20 and a supply / return heating temperature of 60°/80°C.

Fig. 9.16

The values in the tables are measured at the nominal useful power with factory calibration.

9.11 Checking the condensate drain pipe

The condensate drain pipe 34 (Fig. 9.17) does not require any particular maintenance but just check:

- That no solid deposits have formed, if so remove them.
- That the condensate drain piping is not clogged.

Unscrew the plug to clean inside the pipe.

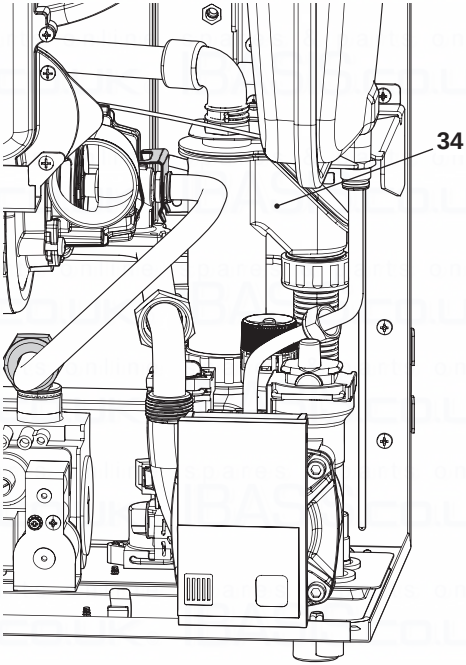

Fig. 9.17

9.12 Visual inspection of appliance

Visually inspect all water joints, seals and connections for any evidence of leakage and retighten, grease or replace them as necessary.

9.13 Checking the gas supply pressure

Check appliance for gas tightness.
Recheck operational pressures as described in section "Checking the gas supply pressure" to page 61 of this manual.

9.14 Water inhibitor concentration

Where chemical products are used the level of water treatment should be checked on an annual basis and re treated after full or partial drain down.
A conductivitymeter can be used to check the correct concentration of inhibitor in the heating water.

9.15 Setting the boiler chimney sweep function

With the boiler set in chimney sweep mode, it is possible to exclude some boiler automatic functions making check and control operations easier.

- Enter in "programming mode" by pressing keys 14 - 15 - 16 (Fig. 9.18) for 10 seconds at the same time until the letters **Pr** that alternate with code **01** are displayed on the LCD display, indicating that "parameter 01" (Fig. 9.19) has been activated.

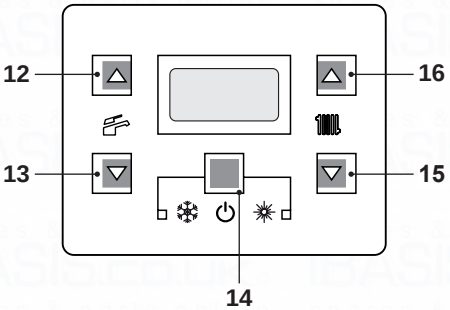

Fig. 9.18

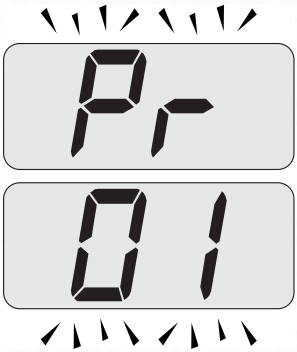

Fig. 9.19

Chimney sweep function at minimum output in domestic hot water mode

- Press keys 15 and 16 (Fig. 9.18) at the same time until the LCD display displays the letters **LP** that alternate with the heating water temperature value (e.g.**45**), indicating the activation of the "chimney sweep function" at minimum output (Fig. 9.20).

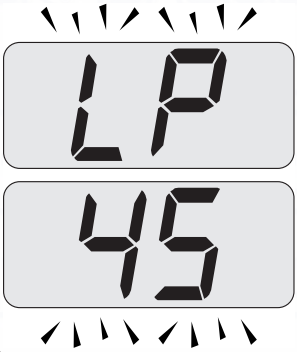

Fig. 9.20

Chimney sweep function at minimum output in heating mode

- By pressing 16 (Fig. 9.18) it is possible to change power in chimney sweep mode: with the letters **hP** on the LCD display which alternate between the heated water temperature (i.e.**32**), we are in the “chimney sweep function” at the minimum power during heating (Fig. 9.21).

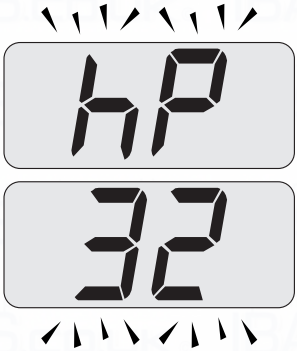

Fig. 9.21

Chimney sweep function at maximum output in heating mode

- Press key 16 to vary the output in chimney sweep mode: when the LCD display displays the letters **cP** that alternate with the heating water temperature value (e.g.**60**), the "chimney sweep function" is at maximum (eventually range rated) output in heating mode (Fig. 9.22).

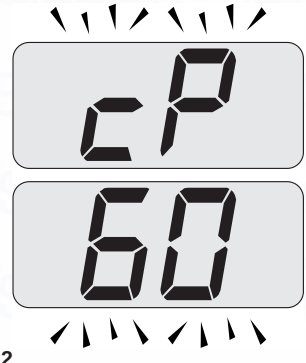

Fig. 9.22

Chimney sweep function at maximum output in domestic hot water mode

- Press further key 16 to vary again the output in chimney sweep mode: when the LCD display displays the letters **dP** that alternate with the heating water temperature value (e.g.**99**), the "chimney sweep function" is at maximum output in domestic hot water mode (Fig. 9.23).

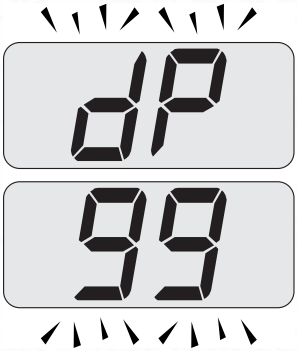

Fig. 9.23

- Press keys 14 - 15 - 16 (Fig. 9.18) at the same time again to exit the "chimney sweep mode" and return to the previously set boiler status (Fig. 9.24).

Winter

Summer

Fig. 9.24

10 BENCHMARK COMMISSIONING AND SERVICING SECTION

It is a requirement that the boiler is installed and commissioned to the manufacturers instructions and the data fields on the commissioning checklist completed in full.

To instigate the boiler guarantee the boiler needs to be registered with the manufacturer within one month of the installation.

To maintain the boiler guarantee it is essential that the boiler is serviced annually by a Gas Safe registered engineer who has been trained on the boiler installed.
The service details should be recorded on the Benchmark Service Interval Record and left with the householder.

benchmark
COLLECTIVE MARK
THE MARK OF QUALITY FOR THE INSTALLATION, COMMISSIONING AND SERVICING OF DOMESTIC HEATING AND HOT WATER SYSTEMS

www.centralheating.co.uk

spares & parts online IBASIS.CO.UK

GAS BOILER SYSTEM COMMISSIONING CHECKLIST

This Commissioning Checklist is to be completed in full by the competent person who commissioned the boiler as a means of demonstrating compliance with the appropriate Building Regulations and then handed to the customer to keep for future reference.

Failure to install and commission according to the manufacturer's instructions and complete this Benchmark Commissioning Checklist will invalidate the warranty. This does not affect the customer's statutory rights.

Customer name:	Telephone number:
Address:	
Boiler make and model:	
Boiler serial number:	
Commissioned by (PRINT NAME):	Gas Safe register number:
Company name:	Telephone number:
Company address:	
	Commissioning date:
To be completed by the customer on receipt of a Building Regulations Compliance Certificate*	
Building Regulations Notification Number (if applicable):	

CONTROLS (tick the appropriate boxes)				
Time and temperature control to heating	Room thermostat and programmer/timer		Programmable room thermostat	
	Load/weather compensation		Optimum start control	
Time and temperature control to hot water	Cylinder thermostat and programmer/timer		Combination Boiler	
Heating zone valves	Fitted		Not required	
Hot water zone valves	Fitted		Not required	
Thermostatic radiator valves	Fitted		Not required	
Automatic bypass to system	Fitted		Not required	
Boiler interlock			Provided	

ALL SYSTEMS				
The system has been flushed and cleaned in accordance with BS7593 and boiler manufacturer's instructions			Yes	
What system cleaner was used?				
What inhibitor was used?		Quantity	litres	
Has a primary water system filter been installed?	Yes		No	

CENTRAL HEATING MODE measure and record:			
Gas rate	m^3/hr	**OR**	ft^3/hr
Burner operating pressure (if applicable)	mbar	**OR** Gas inlet pressure	mbar
Central heating flow temperature			°C
Central heating return temperature			°C

COMBINATION BOILERS ONLY				
Is the installation in a hard water area (above 200ppm)?	Yes		No	
If yes, and if required by the manufacturer, has a water scale reducer been fitted?	Yes		No	
What type of scale reducer has been fitted?				

DOMESTIC HOT WATER MODE Measure and Record:				
Gas rate	m^3/hr	**OR**	ft^3/hr	
Burner operating pressure (at maximum rate)	mbar	**OR** Gas inlet pressure at maximum rate	mbar	
Cold water inlet temperature				°C
Hot water has been checked at all outlets	Yes		Temperature	°C
Water flow rate				l/min

CONDENSING BOILERS ONLY		
The condensate drain has been installed in accordance with the manufacturer's instructions and/or BS5546/BS6798	Yes	

ALL INSTALLATIONS						
Record the following:	At max. rate:	CO	ppm	**AND**	CO/CO_2	Ratio
	At min. rate: (where possible)	CO	ppm	**AND**	CO/CO_2	Ratio
The heating and hot water system complies with the appropriate Building Regulations					Yes	
The boiler and associated products have been installed and commissioned in accordance with the manufacturer's instructions					Yes	
The operation of the boiler and system controls have been demonstrated to and understood by the customer					Yes	
The manufacturer's literature, including Benchmark Checklist and Service Record, has been explained and left with the customer					Yes	

Commissioning Engineer's Signature
Customer's Signature
(To confirm satisfactory demonstration and receipt of manufacturer's literature)

*All installations in England and Wales must be notified to Local Authority Building Control (LABC) either directly or through a Competent Persons Scheme. A Building Regulations Compliance Certificate will then be issued to the customer.

benchmark COLLECTIVE MARK
THE MARK OF QUALITY FOR THE INSTALLATION, COMMISSIONING AND SERVICING OF DOMESTIC HEATING AND HOT WATER SYSTEMS

© Heating and Hotwater Industry Council (HHIC)

SERVICE RECORD

It is recommended that your heating system is serviced regularly and that the appropriate Service Interval Record is completed.

Service Provider

Before completing the appropriate Service Record below, please ensure you have carried out the service as described in the manufacturer's instructions. Always use the manufacturer's specified spare part when replacing controls.

SERVICE 01				Date:
Engineer name:				
Company name:				
Telephone No:				
Gas safe register No:				
Record:	At max. rate:	CO ppm	**AND**	CO_2 %
	At min. rate: (Where Possible)	CO ppm	**AND**	CO_2 %
Comments:				
Signature				

SERVICE 02				Date:
Engineer name:				
Company name:				
Telephone No:				
Gas safe register No:				
Record:	At max. rate:	CO ppm	**AND**	CO_2 %
	At min. rate: (Where Possible)	CO ppm	**AND**	CO_2 %
Comments:				
Signature				

SERVICE 03				Date:
Engineer name:				
Company name:				
Telephone No:				
Gas safe register No:				
Record:	At max. rate:	CO ppm	**AND**	CO_2 %
	At min. rate: (Where Possible)	CO ppm	**AND**	CO_2 %
Comments:				
Signature				

SERVICE 04				Date:
Engineer name:				
Company name:				
Telephone No:				
Gas safe register No:				
Record:	At max. rate:	CO ppm	**AND**	CO_2 %
	At min. rate: (Where Possible)	CO ppm	**AND**	CO_2 %
Comments:				
Signature				

SERVICE 05				Date:
Engineer name:				
Company name:				
Telephone No:				
Gas safe register No:				
Record:	At max. rate:	CO ppm	**AND**	CO_2 %
	At min. rate: (Where Possible)	CO ppm	**AND**	CO_2 %
Comments:				
Signature				

SERVICE 06				Date:
Engineer name:				
Company name:				
Telephone No:				
Gas safe register No:				
Record:	At max. rate:	CO ppm	**AND**	CO_2 %
	At min. rate: (Where Possible)	CO ppm	**AND**	CO_2 %
Comments:				
Signature				

SERVICE 07				Date:
Engineer name:				
Company name:				
Telephone No:				
Gas safe register No:				
Record:	At max. rate:	CO ppm	**AND**	CO_2 %
	At min. rate: (Where Possible)	CO ppm	**AND**	CO_2 %
Comments:				
Signature				

SERVICE 08				Date:
Engineer name:				
Company name:				
Telephone No:				
Gas safe register No:				
Record:	At max. rate:	CO ppm	**AND**	CO_2 %
	At min. rate: (Where Possible)	CO ppm	**AND**	CO_2 %
Comments:				
Signature				

SERVICE 09				Date:
Engineer name:				
Company name:				
Telephone No:				
Gas safe register No:				
Record:	At max. rate:	CO ppm	**AND**	CO_2 %
	At min. rate: (Where Possible)	CO ppm	**AND**	CO_2 %
Comments:				
Signature				

SERVICE 10				Date:
Engineer name:				
Company name:				
Telephone No:				
Gas safe register No:				
Record:	At max. rate:	CO ppm	**AND**	CO_2 %
	At min. rate: (Where Possible)	CO ppm	**AND**	CO_2 %
Comments:				
Signature				

*All installations in England and Wales must be notified to Local Authority Building Control (LABC) either directly or through a Competent Persons Scheme. A Building Regulations Compliance Certificate will then be issued to the customer.

benchmark COLLECTIVE MARK
THE MARK OF QUALITY FOR THE INSTALLATION, COMMISSIONING AND SERVICING OF DOMESTIC HEATING AND HOT WATER SYSTEMS

© Heating and Hotwater Industry Council (HHIC)

spares & parts online
IBASIS.co.uk

17962.2515.0 0616 88A5 UK

Biasi UK Ltd
Commercial Road
Leamore Enterprise Park
WALSALL

WS2 7NQ

Sales Tel. 01922 714600
Tech. Service Tel. 01922 714636
www.biasi.co.uk

Available on the Android App Store

Available on the App Store