Wall hung, fanflue, roomsealed, high efficiency gas boiler

User manual and Installation instructions

Riva Plus HE ERP

Models	G.C. Appl. No.	
RIVA PLUS HE 24C ERP	**47-583-41**	**COMBI BOILER**
RIVA PLUS HE 28C ERP	**47-583-42**	**COMBI BOILER**

BIASI

WARNING

Congratulations on your choice.

Riva Plus HE ERP are condensing high efficiency sealed chamber fan flue gas boilers. They are fully electronically controlled and have electronic ignition.
The materials they are made of and the control systems they are equipped with give you safety, a high level of comfort and energy savings to allow you to get the greatest benefit out of independent heating.
Riva Plus HE ERP allow a higher efficiency by reducing the flue gas temperature such that the water vapour formed during the combustion is condensed out.
This allows a gain of useful heat that otherwise would be lost.

benchmark
COLLECTIVE MARK
THE MARK OF QUALITY FOR THE INSTALLATION, COMMISSIONING AND SERVICING OF DOMESTIC HEATING AND HOT WATER SYSTEMS

Biasi UK Ltd is a licensed member of the Benchmark Scheme which aims to improve the standards of installation and commissioning of domestic heating and hot water systems in the UK and to encourage regular servicing to optimise safety, efficiency and performance.
Benchmark is managed and promoted by the Heating and Hot water Industry Council. For more information visit www.centralheating.co.uk.

DANGER: The indications marked with this symbol must be observed to prevent accidents of mechanical or generic origin (e.g.: Injuries or bruises).

DANGER: The indications marked with this symbol must be observed to prevent accidents of electric origin (electrocution).

DANGER: The indications marked with this symbol must be observed to prevent the risk of fire or explosion.

DANGER: The indications marked with this symbol must be observed to prevent accidents of heat origin (burns).

ATTENTION: The indications marked with this symbol must be observed to prevent malfunctioning and/or damage to materials of the appliance or other objects.

ATTENTION: The indications marked with this symbol is important information that must be carefully read.

Remember that...

✓ **The manual** must be read thoroughly, so that you will be able to use the boiler in a safe and sensible way; must be carefully kept. It may be necessary for reference in the future.
✓ **The lighting up** must be carried out by competent and responsible engineer.
✓ **The manufacturer**
- disclaim all liability for any translations of the present manual from which incorrect interpretation may occur;
- cannot be held responsible for non-observance of instructions contained in this manual or for the consequences of any procedure not specifically described.

Please ensure that the installer has fully completed the Benchmark Checklist on the inside back pages of the installation instructions supplied with the product and that you have signed it to say that you have received a full and clear explanation of its operation. The installer is legally required to complete a commissioning checklist as a means of complying with the appropriate Building Regulations (England and Wales).
All installations must be notified to Local Area Building Control either directly or through a Competent Persons Scheme. A Building Regulations Compliance Certificate will then be issued to the customer who should, on receipt, write the Notification Number on the Benchmark Checklist.
This product should be serviced regularly to optimise its safety, efficiency and performance. The service engineer should complete the relevant Service Record on the Benchmark Checklist after each service.
The Benchmark Checklist will be required in the event of any warranty.

Using the boiler...

✓ **Before lighting the boiler** you are advised to have a Gas Safety Registered Engineer check that the installation of the gas supply
- is gas-tight;
- is of the correct gauge for the flow to the boiler;
- is fitted with all the safety and control devices required by the current Regulations.

✓ **Ensure that**
- check with the Installer that he has connected and terminated the pressure relief valve in a manner which allows safe discharge. The manufacturers are not responsible for damage caused by opening of the pressure relief valve and consequent escape of water, if this is not connected and terminated;
- the installer has connected the condensate outlet to a suitable drain pipe.

WARNING

- ✓ **On detecting the smell of gas:**
  - don't operate any electrical switches, the telephone or any device that may produce sparks;
  - open the windows and doors at once to create a draught of air which will purge the area;
  - shut off the gas cocks;
  - get the assistance of a qualified person. Emergency telephone number

  Tel 0800 111999.
- ✓ **Do not touch the appliance** with parts of the body that are wet or damp and/or bare feet.
- ✓ **Do not block or modify** the condensate outlet and pipework.
- ✓ **In case of structural work** or maintenance near the exhaust duct and/or fume exhaust devices or their attachments, turn off the appliance. On completion of the work, have a professionally qualified person check their efficiency.
- ✓ **Repairs** (under guarantee) must be carried out only by a Biasi an approved engineer, using genuine spare parts. Thus do no more than switching off the boiler yourself (see the instructions).
- ✓ **Your boiler** allows heating up of water to a temperature less than boiling point;
  - must be connected to a central heating system and/or a hot water supply system, compatible with its performance and output;
  - can be used only for those purposes for which it has been specially designed;
  - must not be touched by children or by those unfamiliar with its operation;
  - must not be exposed to weather conditions.
- ✓ **During the operation** it is quite normal that the boiler produces a white plume of condensation vapour from the flue terminal. This is due to the high efficiency of the appliance and may be particularly evident with low outdoor temperatures.

Safe handling of substances

Biasi products are manufactured in accordance with ISO 9001 and do not, and will not, contain any hazardous materials or substances such as asbestos, mercury or C.F.C.'s. The appliance packaging does not contain any substances, which may be considered a hazard to health.

When handling or lifting always use safe techniques
- keep your back straight, bend your knees, don't twist;
- move your feet, avoid bending forwards and side way sand keep the load as close to your body as possible.

Where possible transport the boiler using a sack truck or other suitable trolly.
Always grip the boiler firmly, and before lifting feel where the weight is concentrated to establish the centre of gravity, repositioning yourself as necessary.

Combustion chamber panels
Material: mineral fibres
Known hazards - Some people can suffer reddening and itching of the skin. Fibre entry into the eye will cause foreign body irritation, which can cause severe irritation to people wearing contact lenses. Irritation to respiratory tract.
Precautions - Dust goggles will protect eyes. People with a history of skin complaints may be particularly susceptible to irritation. High dust levels are only likely to arise following harsh abrasion. In general, normal handling and use will not present high risk, follow good hygiene practices, wash hands before, touching eyes, consuming food, drinking or using the toilet.
First aid - Medical attention must be sought following eye contact or prolonged reddening of the skin.

Thermostat / Temperature gauge
Description - Sealed phial and capillary containing liquid.
Known hazards - irritating to skin, eyes and throat. Vapour is harmful. Inflammable -do not extinguish with water.
Precautions - Do not incinerate. Avoid contact with broken/leaking phials. Do not purposely puncture.
First aid - medical attention must be sought following eyes/skin contact, wash with clean water.

Sharp Edges
Caution should be taken when handling the boiler to avoid sharp edges on the boiler.

Boiler installation and commissioning tips

✓ The installation must be carried out by a qualified Gas Safety Registered Engineer who will be responsible for observing the current Regulations and the completion of the Benchmark Gas Boiler System Commissioning Checklist, located at the back of this User manual.

Internally installed mains water meters
Please ensure if the property has had a water meter installed inside the property that it does not include a non-return valve, should you find that it does include a non-return valve then provision of a WRAS approved mini expansion vessel must be made.
Biasi optional WRAS approved easy fit 15 mm mini shock arrestor kit BI9999 999 can be obtained through your local Biasi stockist.

WARNING

Installing the boiler...

- ✓ Do not forget to remove the transit caps and plugs from the boiler connections these are fitted to every boiler.
- ✓ Keep the boiler clear of dust during installation and in particular do not allow any dust or debris to enter the top of the boiler where the flue connection is made. It is recommended that you put a dust sheet over the top of the boiler until you are ready to make the flue connection.
- ✓ Remember to release the auto air purge before filling the boiler. See the instructions to identify the location of this device.
- ✓ This boiler allows to control the flow temperature of the central heating system at very low levels. In case of underfloor heating system a temperature limiting device (e.g. a safety thermostat) is recommended to stop the boiler in case that the water temperature exceeds the design temperature.
- ✓ You are strongly advised to the British Standard BS 7593-2006 Code of practice,flush out the system both cold and hot in order to remove system and installation debris.
- ✓ It is also sensible to initially fire and commission the boiler before connecting any external controls such as a room thermostat. By following this procedure if you have a subsequent problem this method if you have a subsequent problem following the addition of an external control you can eliminate the boiler from your fault analysis.
- ✓ If the boiler is fitted with a digital programmer, when setting the times for automatic operation, remember that for every “ON” time there must be an “OFF” time to follow and that on every occasion you enter a time you must also indicate which days that you want the boiler to follow the timed settings.
- ✓ Some products incorporate an anti cycling time delay. It is normal when first switching the boiler on for the boiler to operate on heating for a few seconds then switch off. After 3 - 4 minutes has elapsed the boiler will then re ignite and operate perfectly normally. The ignition delay cycle does not prevent normal operation of the boiler to provide d.h.w.
- ✓ If you are in any doubts as to the installation or operation of the boiler please read the instruction manuals thoroughly and then if necessary contact Biasi UK for advice and assistance.
- ✓ Guarantee conditions. The guarantee registration form must be returned within 30 of purchase, failure to comply will invalidate the guarantee.

Please remember that if you are in any doubt about the installation of this product you can contact our Technical Helpline on tel. 01922 714 600.

Abbreviations used in the manual:
C.h. = Central heating
D.h.w. = Domestic hot water
D.c.w. = Domestic cold wate

TABLE OF CONTENTS

1 APPLIANCE DESCRIPTION 8
1.1 Overview. 8
1.2 Control panel 8
1.3 Isolation valves 8
1.4 Technical data. 8
1.5 Operation lights 9

2 INSTRUCTIONS FOR USE 10
2.1 Warnings. 10
2.2 Refilling procedure 10
2.3 Ignition 11
2.4 C.h. circuit temperature 11
2.5 D.h.w. temperature 12
2.6 Extinguishing 13
2.7 Built in time switch A. 13
2.8 Built in time switch B. 15
2.9 Built in time switch C. 17
2.10 Built in time switch D. 20

3 USEFUL ADVICE. 23
3.1 Central Heating. 23
3.2 Frost protection. 23
3.3 Condensate drain 23
3.4 Periodic maintenance 23
3.5 External cleaning 23
3.6 Operational faults 24

4 TECHNICAL INFORMATION. 26
4.1 Overview. 26
4.2 Main diagram 27
4.3 Hydraulic specifications 29
4.4 Expansion vessel 29
4.5 Technical data mod. Riva Plus HE 24C ERP . . 30
4.6 Technical data mod. Riva Plus HE 28C ERP . . 34

5 GENERAL REQUIREMENTS 38
5.1 Related documents. 38
5.2 Location of appliance 38
5.3 Flue system 39
5.4 Gas supply 39
5.5 Air supply 40
5.6 Ventilation. 40
5.7 Condensate drain 40
5.8 Water circulation (c.h.) 41
5.9 Domestic water. 42
5.10 Water treatment 42
5.11 Electrical supply 42

6 INSTALLATION 43
6.1 Warnings. 43
6.2 Precautions for installation 43
6.3 Installing the bracket. 44
6.4 Overall dimensions 44
6.5 Joints 45
6.6 Mounting the boiler. 45
6.7 Fitting the flue system. 45
6.8 Choice of flue 46
6.9 Electrical connections. 48
6.10 External frost protection 50

7 COMMISSIONING 51
7.1 Warnings. 51
7.2 Electrical installation 51
7.3 Gas supply installation 51
7.4 Filling the d.h.w. system 51
7.5 Initial filling of the system 51
7.6 Condensate pipe and traps 53
7.7 Lighting the boiler 53
7.8 Checking the gas pressure at the burner 54
7.9 Checking the burner ignition. 55
7.10 Checking the ignition device. 55
7.11 Checking the flue system 55
7.12 Check pump operation/pump release. 56
7.13 Checking the condensate drain pipe 56
7.14 Instructing the user. 56

8 GAS CONVERSION 57
8.1 Warnings. 57
8.2 Procedures 57

9 MAINTENANCE. 59
9.1 Warnings. 59
9.2 Dismantling the external panels 59
9.3 Emptying the d.h.w. system 59
9.4 Emptying the c.h. system 59
9.5 Combustion analysis check 60
9.6 Cleaning the primary heat exchanger. 60
9.7 Checking the pressurisation in the expansion vessel 60
9.8 Cleaning the burner 60
9.9 Checking the flue 60
9.10 Drain pipe inspection 60
9.11 Visual inspection of appliance 60
9.12 Gas pressures and tightness 60
9.13 Water inhibitor concentration 60

10BENCHMARK COMMISSIONING AND SERVICING SECTION 61
Gas boiler system commissioning checklist . . . 62
Service record. 63

Appliance category: II2H3+ (Gas G20 20 mbar, G30 29 mbar, G31 37 mbar)
Country of destination: United Kingdom (GB) Ireland (IE)
This appliance conforms with the following EEC directive:
Gas Directive 2009/142/CE
Boiler Efficiency Directive 92/42/CEE
Electromagnetic Compatibility Directive 2004/108/CE
Low Voltage Directive 2006/95/CE
The manufacturer, in the continuous process to improve his products, reserves the right to modify the data expressed in the present documentation at any time and without prior notice.
The present documentation is an informative support and it can not be considered as a contract to-wards third parties.

USE

1 APPLIANCE DESCRIPTION

1.1 Overview

The model and serial number of the boiler are printed on bottom right side.

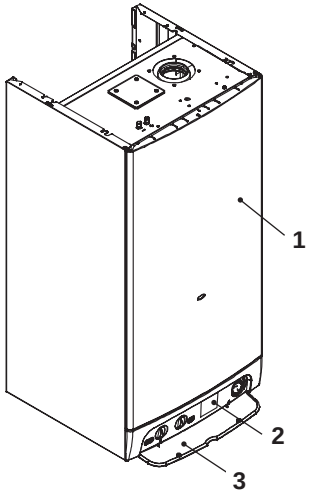

Fig. 1.1

1 Case front panel
2 Control panel
3 Control panel cover

1.2 Control panel

4 C.h. circuit temperature and pressure gauge
5 Time switch (c.h. control)
6 Lock-out signal lamp
7 Lockout reset button
8 Function selector and c.h. temp. control knob
9 D.h.w. temperature control knob
10 Appliance operation lights

1.3 Isolation valves

Provide for the installation of a stop valve on the D.c.w. inlet pipe.

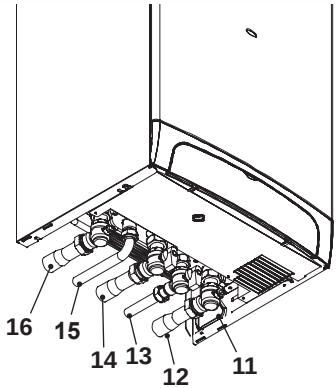

Fig. 1.2

11 Condensate drain pipe
12 C.h. return valve
13 D.c.w. inlet valve
14 Gas inlet valve
15 D.h.w. outlet pipe
16 C.h. flow valve

1.4 Technical data

For detailed technical data see sections "Technical Data" on pag. 30 or pag. 34.

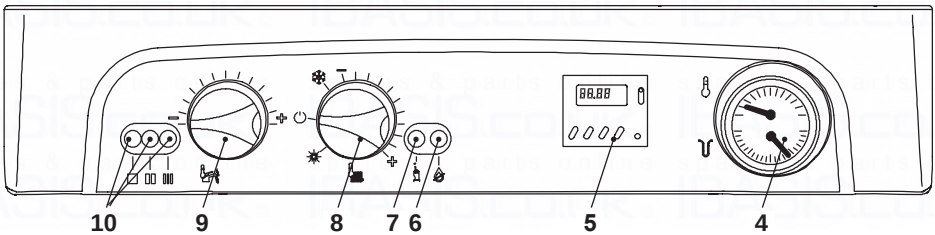

Fig. 1.3

1.5 Operation lights

Three lights (10 in Fig. 1.3) give detailed indication regarding the operation of the boiler.

The following table gives the relationship between each of the possible light combinations and their meaning.

☼ ○ ○	**A short pulse every 4 seconds: stand-by condition ⏻ position. Anti-freeze system active**
	1 second pulse every 2 seconds: normally operating boiler. Function selector in ❄ or ☀ position
☼ ○ ☼	**C.h. operation**
◐ ○ ◐	**D.h.w. operation**
☼ ☼ ○	**Frost protect operation**
○ ○ ☼	**D.h.w. operation Excessive temperature on primary circuit**

If the lights combination observed is not included in the above table a fault may be indicated.

Reference should be made to the following table.

In this case switch off the boiler, as described in section "Extinguishing" to page 13 and call a competent and responsible Service Engineer.

○ ☼ ☼	**Faulty c.h. temperature probe NTC**
○ ☼ ●	**Faulty d.h.w temperature probe NTC**
● ☼ ○	**Faulty flue temperature probe NTC**
☼ ● ○	**Faulty primary circuit (no water or low c.h. pressure)**
◐ ◐ ●	**Faulty primary circuit (absence of flow)**
☼ ☼ ●	**Faulty air pressure sensor**
☼ ● ☼	**Lack of burner ignition (no ignition signal from the full sequence ignition device)**
● ☼ ☼	**Safety thermostat lock out**
● ● ☼	**Flue temperature probe NTC lock out**
☼ ☼ ☼	**Flame detection error**
○ ☼ ○	**Other faults**
○ ○ ○	**Lack of power supply or fauly electr. control p.c.b.**

Meaning of symbols:

○	**Lamp OFF**
●	**Lamp ON**
☼	**Flashing lamp, alone or simultaneously with an other lamp**
◐	**Flashing lamp, alternate with another lamp**

USE

USE

2 INSTRUCTIONS FOR USE

2.1 Warnings

Biasi UK Ltd support the Benchmark initiative. The Benchmark Checklist is located at the back of this manual and should be completed by the Installing/Commissioning Engineer and handed over to the User for future reference by other visiting Engineers. Also included is the Service Interval Record card that should be completed by the Service Engineer following the annual service maintenance of the boiler and system.
All Gas Safe Registered Installers carry a Gas Safe ID card, and have a registration number. Both should be recorded in your Benchmark Checklist. You can check your Installer is registered by calling Gas Safe direct on 0800 408 5500, or go on line at www.GasSafeRegister.co.uk.

In order to guarantee safety and correct operation, it is essential that all the tests are carried out by a competent and responsible service engineer before lighting up the boiler. The tests are described in the installation instructions in section 7 commissioning.
Ensure that the c.h. circuit is regularly filled with water (even if the boiler is only used for d.h.w. supply) checking that the pressure indicated on pressure gauge 4 is not lower than that shown in Fig. 2.2.
If the pressure reading on the pressure gauge is below that shown in Fig. 2.2, then the system will require topping up. A filling loop is normally provided by the Installer for this purpose.

If you are in any doubt regarding this procedure you are advised to contact your Installer or an Approved Engineer.

This appliance is provided with a built in anti-freeze system that operates the boiler when the temperature is below 5 °C.
Therefore, when the boiler is not lit or used in cold weather, with consequent risk of freezing **do not switch off the boiler at the fused spur isolation switch or close the gas inlet cock.**
When you do not expect to use the boiler for a long period and the boiler is not to be used for frost protection then follow the instructions given in section "Extinguishing" to page 13.

2.2 Refilling procedure

- Isolate the boiler from the electrical supply at the fused spur. Reconnect the filling loop as demonstrated in Fig. 2.1.

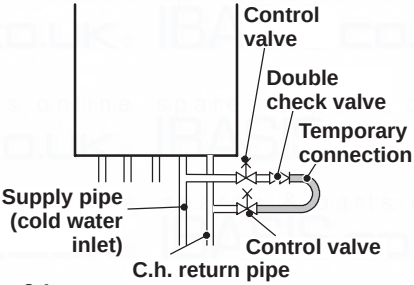

Fig. 2.1

- Open the valves of the filling loop and watch the gauge until it reaches normal filling pressure as shown in Fig. 2.2.

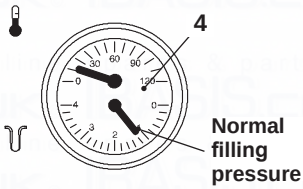

Fig. 2.2

- Close the valves and remove the filling loop.

If you experience any difficulty with the operation of the boiler, switch off the boiler immediately at the fused spur isolation switch and contact your Installer or an approved Service Engineer.

Air introduced into the boiler during this filling process will vent through the automatic air purger fitted to the boiler. You may also find it necessary to vent air from your radiator circuit using your radiator key, however be aware that excessive venting will cause the pressure in the system to drop.
Always ensure that the pressure gauge is set at the required pressure.

2.3 Ignition

- Check that the valves located in the lower part of the boiler are open Fig. 2.3.

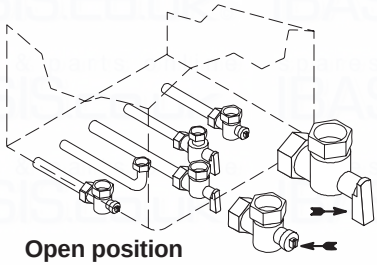

Fig. 2.3

- Turn on the electricity supply to the boiler switching on the fused spur isolation switch. The appliance operation light 10 (Fig. 2.4) will flash every 4 seconds (stand-by condition).
- If the boiler is to be used for c.h. and d.h.w, position the function selector 8 as in Fig. 2.4. The appliance operation light 10 will flash every 2 seconds (operating boiler).

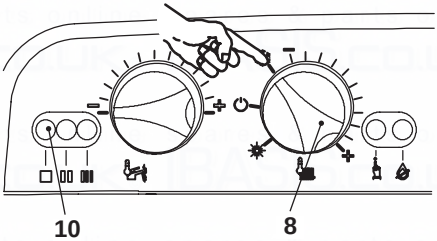

Fig. 2.4

- If d.h.w. supply only is required, position the function selector 8 as in Fig. 2.5. The appliance operation light 10 will flash every 2 seconds (operating boiler).

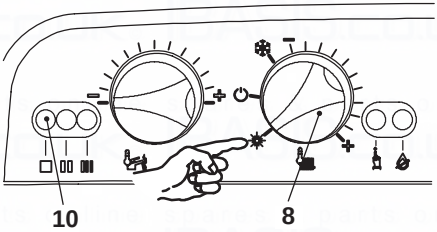

Fig. 2.5

2.4 C.h. circuit temperature

The output temperature of c.h. water is adjustable from a minimum of about 40°C to a maximum of about 85°C (Fig. 2.6), by turning the function selector (8).
Adjustment of c.h. output on the boiler is automatic.
The greatest output pre-set in the factory can, however, be reduced in level according to actual system requirements; this does not affect the maximum output in d.h.w. operation.
Such adjustments must be carried out by a qualified person; therefore we advise you to contact your installer or Service Agent.
Adjustment of the boiler temperature alters

USE

the gas flow at the burner according to the thermal demand in the system. So it is usual to see the burner lit at the minimum level for more or less long periods.

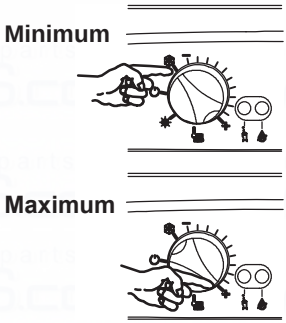

Fig. 2.6

Adjustment

In order to achieve optimal settings for economy and comfort, we recommend adjusting the operating temperature of the c.h. water according to the outside temperature, positioning the knob as follows:

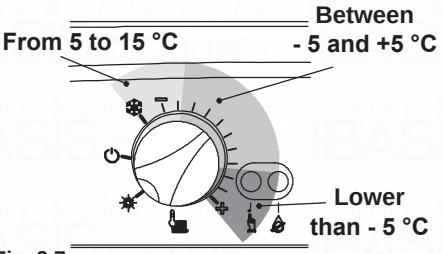

Fig. 2.7

Your qualified installer will be able to recommend the most suitable adjustment for your system.

The temperature and pressure gauge (4, Fig. 1.3 on page 8) will allow you to check that the set temperature is obtained.

2.5 D.h.w. temperature

The temperature of the d.h.w. leaving the boiler can be varied from a minimum of about 35°C to a maximum of about 55°C (Fig. 2.8), by turning the temperature control knob 9.

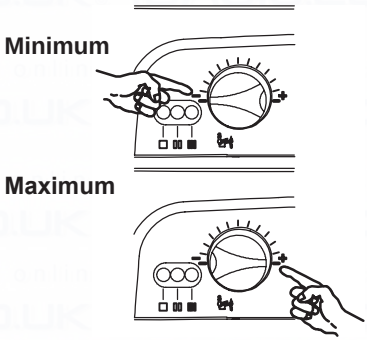

Fig. 2.8

Adjustment of the d.h.w. temperature is completely separate from that of the c.h. circuit.

The adjustment system integrated within the boiler automatically controls the flow of gas to the burner in order to keep the temperature of d.h.w. delivered constant, between the limits of maximum and minimum output.

Where the demand is at a low level or with the temperature set to the minimum, it is normal to see a cycle of lighting and extinguishing of the burner when running.

Adjustment

It is advisable to adjust the d.h.w. temperature to a level commensurate with the demand, minimising the need to mix with cold water. In this way, the automatic control facilities will be fully exploited.

Moreover, where the amount of limescale present in the water may be particularly great, not exceeding the position in Fig. 2.9 of the d.h.w. temperature control knob 9 corresponding to about 50°C (Fig. 2.9),minimises annoying incidences of scale deposits and clogging.

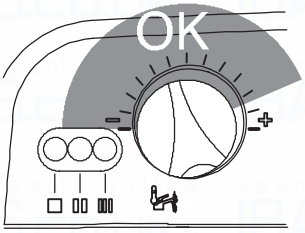

Fig. 2.9

In these cases, however, it is advisable to install a small water treatment device or softener. With such a device you should avoid periodic descaling.
Consequently, the d.h.w. heat exchanger will keep its performance consistent for a longer period of time with resulting gas savings.
If the demand for d.h.w. is so great as to prevent reaching a high enough temperature, have the appropriate output limiting valve installed by your installer or an Authorised Service Engineer.

2.6 Extinguishing

To turn the boiler off set the function selector 8 to the position shown in Fig. 2.10.
The appliance operation light 10 will flash every 4 seconds.

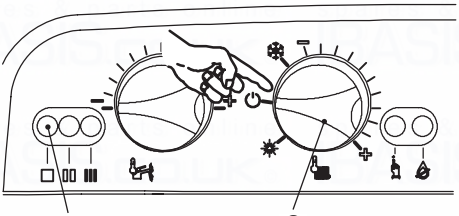

Fig. 2.10

When you do not expect to use the boiler for a long period:

- Switch off the electricity supply to the boiler, by means of the fused spur isolation switch.
- Shut off the gas supply cock 14 and the valves for the water circuits fitted under the boiler (Fig. 2.11).
- Empty the water circuits, if necessary, as shown in section *General access and emptying hydraulic circuits* in the service manual.

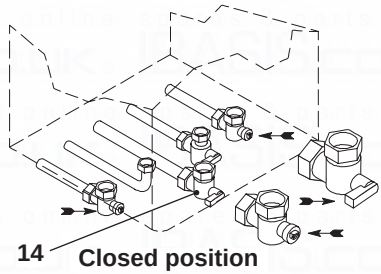

Fig. 2.11

2.7 Built in time switch A

The boilers are equipped with a built in electronic time switch (5, Fig. 1.3 on page 8) which controls the c.h. operation.

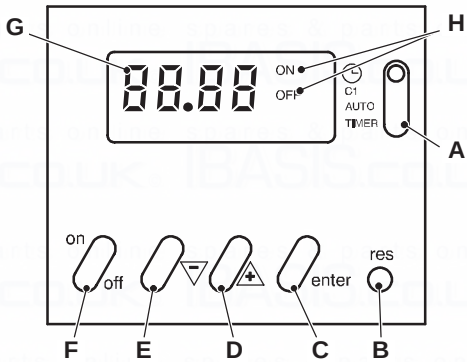

Fig. 2.12

Display and control panel:

A Mode selector switch
B Reset button
C Enter button

USE

D Increase “+” setting button
E Decrease “-” setting button
F On-off button
G Time display
H ON-OFF display

Setting the current time

Note: with a new unit or when the reset button B has been pressed and the selector switch A is to the ◷ position, the time display G is flashing.
Set the mode selector switch A to the ◷ position and press the buttons D or E until the current time appears in the display G.
The clock starts by moving the switch A to the **AUTO** position.
Setting example shown in Fig. 2.13:
Current time 16.30.

Fig. 2.13

Setting the switching time

20 memory locations are available, corresponding to 10 on-off sequences.
Set the mode selector switch A to the **C1** position.
The symbols shown in Fig. 2.14 appears in the display.

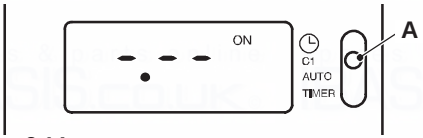

Fig. 2.14

Press the buttons D or E to set the desired ON time. Press the “enter” button C to confirm the setting and to continue programming the OFF time.
Set the OFF time as explained above for the ON setting and confirm by pressing the “enter” button C. Proceed in the same way for other settings.
Setting example shown in Fig. 2.15:
I ON time 7.45.
J OFF time 10.30.

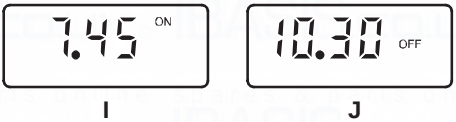

Fig. 2.15

Activating the timed settings

Set the mode selector switch A to the **AUTO** position shown in Fig. 2.16.
The current time appears in the display. The ON-OFF display H indicates the current state of operation (according to the settings).

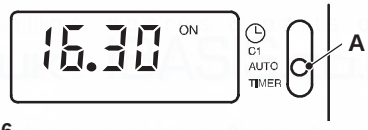

Fig. 2.16

Note: when the mode selector switch A is in the **AUTO** position and the boiler is switched off at the fused spur isolation switch, the display H indicates only the OFF state. The other indications are blanked.

Reading the timed settings

Set the mode selector switch A to the **C1** position. The symbols shown in Fig. 2.14 appears in the display.
Press the “enter” button C. Each time the button is pressed the display shows the details of the next setting.

Changing or deleting the timed settings

Set the mode selector switch A to the **C1** position. The symbols shown in Fig. 2.14 appears in the display.

Press the “enter” button C until the display shows the setting to be modified or deleted.
The time setting can be modified now by pressing button D or E and the operation can be switched on or off by pressing the button F.
To delete a time set press the button D or E until the symbols shown in Fig. 2.14 appears in the time display G.
The new settings are memorized by moving the switch A to a different position.

Manual operation
The operation of the time switch can be forced on or off constantly or for a timed period.
To force **constantly** on or off the timer operation set the mode selector switch A to the **TIMER** position. The symbols shown in Fig. 2.17 appears on the display.

Fig. 2.17

The operation can be switched permanently on or off by pressing the button F and leaving the switch A in the **TIMER** position. To force a timed delay on or off operation, set the mode selector switch A in the **TIMER** position.
Set the time delay by pressing the button D or E and the operation can be forced on or off by pressing the button F.
The time delay can be set within the following ranges:
1 to 23 hours with steps of 1 hour
1 to 27 days with steps of 1 day.

The time delay setting is activated by moving the switch A to the **AUTO** position.
The ON-OFF display H flashes indicating that the current state of operation has been forced.
To delete the timed delay setting, set the mode selector switch A in the **TIMER** position, press the button D or E until the symbols shown in Fig. 2.17 appears in the display and then set the mode selector switch A to the **AUTO** position.
Setting example shown in Fig. 2.18:
forced ON state for 4 hours.

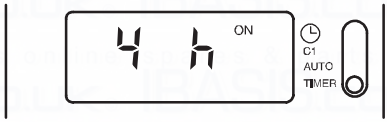

Fig. 2.18

Resetting
To completely reset the timer, press the reset button with a pointed object (pencil).
CAUTION: pushing the reset button will completely erase the settings as well as all the data, including the current time.

2.8 Built in time switch B

The combiboilers are equipped with a built in electronic time switch which controls the c.h. operation.

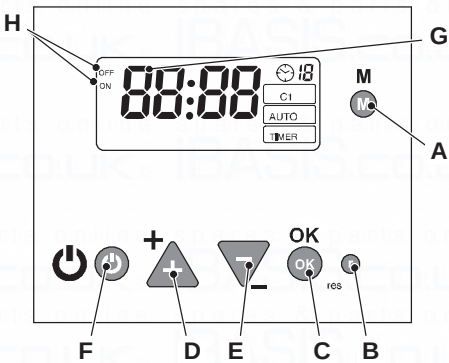

Fig. 2.19

USE

Display and control panel

A Mode selector switch
B Reset button
C OK button
D Increase “+” setting button
E Decrease "-” setting button
F On-off button
G Time display
H ON-OFF display

Setting the current time

Press repeatedly the button A until the display shows the symbol ◷.
Press the buttons D or E until the current time appears in the display G.
The clock starts by pressing the button A to show the symbol **AUTO**.
Setting example shown in Fig. 2.20:
Current time 16.30, day Thursday.

Fig. 2.20

Setting the switching time

28 memory locations are available, corresponding to 14 on-off sequences.
Press repeatedly the button A until the display shows the symbol **C1**.
The symbols shown in Fig. 2.21 appears in the display.

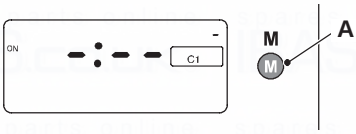

Fig. 2.21

Press the buttons D or E to set the desired ON time. Press the “OK” button C to confirm the setting and to continue programming the OFF time.

Set the OFF time as explained above for the ON setting and confirm by pressing the “OK” button C. Proceed in the same way for other settings.
Setting example shown in Fig. 2.22:
K ON time 7.45.
L OFF time 10.30.

K **L**

Fig. 2.22

Activating the timed settings

The current time appears in the display. The ON-OFF display H indicates the current state of operation (according to the settings).

Fig. 2.23

Note: when the display shows the symbol **AUTO** and the boiler is switched off at the fused spur isolation switch, the display H indicates only the OFF state. The other indications are blanked.

Reading the timed settings

Press repeatedly the button A until the display shows the symbol **C1** (Fig. 2.21).
The symbols shown in Fig. 2.21 appears in the display.
Press the “OK” button C. Each time the button is pressed the display shows the details of the next setting.

Changing or deleting the timed settings

Press repeatedly the button A until the display shows the symbol **C1** (Fig. 2.21).
The symbols shown in Fig. 2.21 appears in

the display.
Press the “OK” button C until the display shows the setting to be modified or deleted.
The time setting can be modified now by pressing button D or E and the operation can be switched on or off by pressing the button F.
To delete a time set press the button D or E until the symbols shown in Fig. 2.21 appears in the time display G.
The new settings are memorised by pressing the button A.

Manual operation
The operation of the time switch can be forced on or off constantly or for a timed period.
To force **constantly** on or off the timer operation press repeatedly the button A until the display shows the symbol **TIMER**. The symbols shown in Fig. 2.24 appears on the display.

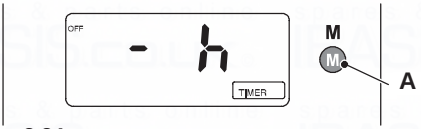

Fig. 2.24

The operation can be switched permanently on or off by pressing the button F and leaving the display shows the symbol **TIMER**.
To force a **timed delay** on or off operation, press repeatedly the button A until the display shows the symbol **TIMER**.
Set the time delay by pressing the button D or E and the operation can be forced on or off by pressing the button F.

The time delay can be set within the following ranges:
1 to 23 hours with steps of 1 hour
1 to 27 days with steps of 1 day.

Press the button A until the display shows the symbol **AUTO**.
The ON-OFF display H flashes indicating that the current state of operation has been forced.
To delete the timed delay setting, press repeatedly the button A until the display shows the symbol **TIMER**, press the button D or E until the symbols shown in Fig. 2.25 appears in the display and then press the button A until the display shows the symbol
AUTO.
Setting example shown in Fig. 2.25:
forced ON state for 4 hours.

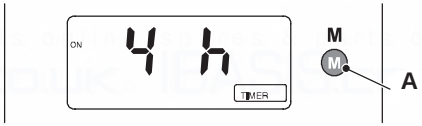

Fig. 2.25

Note: If during manual operation, power supply turns off, timer must be set again following previous steps.

Resetting
To completely reset the timer, press the reset button with a pointed object (pencil).

CAUTION: pushing the reset button will completely erase the settings as well as all the data, including the current time.

2.9 Built in time switch C
The combi boilers are equipped with a built in electronic time switch (5, Fig. 1.3 on page 8) which controls the c.h. operation.

USE

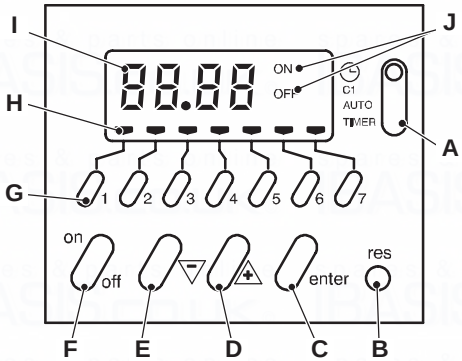

Fig. 2.26

Display and control panel:

A Mode selector switch
B Reset button
C Enter button
D Increase “+” setting button
E Decrease “-” setting button
F On-off button
G Day selection buttons
H Day display
I Time display
J ON-OFF display

Setting the current time and weekday

Note: with a new unit or when the reset button B has been pressed, the first day indicator H on the left and the time display I is flashing.

Set the mode selector switch A to the ◷ position and press the buttons D or E until the current time appears in the display I.

Press the day selection button corresponding to the current day, considering that button 1=Monday, button 2=Tuesday and so on.

The clock starts by moving the switch A to the **AUTO** position.

Setting example shown in Fig. 2.27:

Current time 16.30, day Thursday.

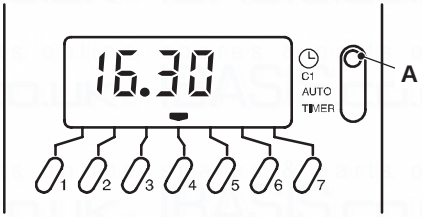

Fig. 2.27

Setting the switching time and day (or days)

20 memory locations are available, corresponding to 10 on-off sequences.

Set the mode selector switch A to the **C1** position.

The symbols shown in Fig. 2.28 appears in the display.

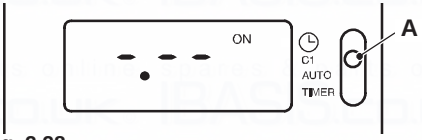

Fig. 2.28

Press the buttons D or E to set the desired ON time.

Press the buttons G to set the desired day or days of operation.

Press the “enter” button C to confirm the setting and to continue programming the OFF time.

Set the OFF time as explained above for the ON setting and confirm by pressing the “enter” button C. Proceed in the same way for other settings.

Setting example shown in Fig. 2.29:

K ON time 7.45, day Monday to Friday.
L OFF time 10.30, day Monday to Friday.

USE

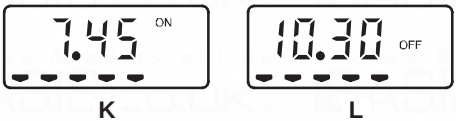

Fig. 2.29

Activating the timed settings

Set the mode selector switch A to the **AUTO** position shown in Fig. 2.16.

The current time and day appears in the display. The ON-OFF display J indicates the current state of operation (according to the settings).

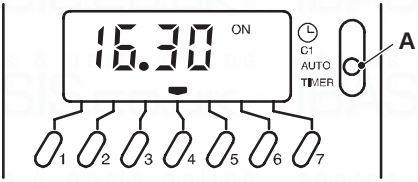

Fig. 2.30

Note: when the mode selector switch A is in the **AUTO** position and the boiler is switched off at the fused spur isolation switch, the display J indicates only the OFF state. The other indications are blanked.

Reading the timed settings

Set the mode selector switch A to the **C1** position. The symbols shown in Fig. 2.28 appears in the display.

Press the “enter” button C. Each time the button is pressed the display shows the details of the next setting.

Changing or deleting the timed settings

Set the mode selector switch A to the **C1** position. The symbols shown in Fig. 2.28 appears in the display.

Press the “enter” button C until the display shows the setting to be modified or deleted.

The day display H gives a flashing indication of the active day or group of days.

Press the button (or the buttons) G corresponding to the day (or days) for which it is intended to apply the modification. The corresponding day display stops flashing and a new switching time can be set or deleted.

The time setting can be modified now by pressing button D or E and the operation can be switched on or off by pressing the button F.

To delete a time set press the button D or E until the symbols shown in Fig. 2.28 appears in the time display I.

The new settings are memorized by moving the switch A to a different position.

Manual operation

The operation of the time switch can be forced on or off constantly or for a timed period.

To force **constantly** on or off the timer operation set the mode selector switch A to the **TIMER** position. The symbols shown in Fig. 2.31 appears on the display.

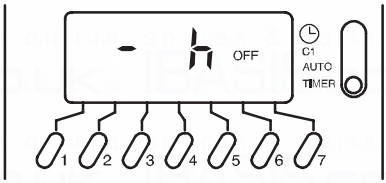

Fig. 2.31

The operation can be switched permanently on or off by pressing the button F and leaving the switch A in the **TIMER** position. To force **a timed delay** on or off operation, set the mode selector switch A in the **TIMER** position.

Set the time delay by pressing the button D or E and the operation can be forced on or off by pressing the button F.

USE

The time delay can be set within the following ranges:
1 to 23 hours with steps of 1 hour
1 to 27 days with steps of 1 day

The time delay setting is activated by moving the switch A to the **AUTO** position.
The ON-OFF display J flashes indicating that the current state of operation has been forced.
To delete the timed delay setting, set the mode selector switch A in the **TIMER** position, press the button D or E until the symbols shown in Fig. 2.31 appears in the display and then set the mode selector switch A to the **AUTO** position.

Setting example shown Fig. 2.32:
forced ON state for 4 hours.

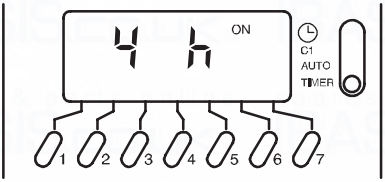

Fig. 2.32

Resetting
To completely reset the timer, press the reset button with a pointed object (pencil).
CAUTION: pushing the reset button will completely erase the settings as well as all the data, including the current time and day.

2.10 Built in time switch D

The combi boilers are equipped with a built in electronic time switch (5on page 8) which controls the c.h. operation.

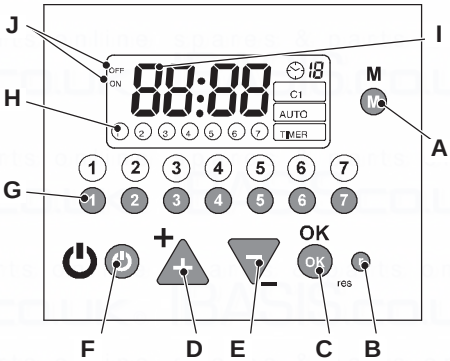

Fig. 2.33

Display and control panel

A Mode selector switch
B Reset button
C OK button
D Increase “+” setting button
E Decrease "-” setting button
F On-off button
G Day selection buttons
H Day display
I Time display
J ON-OFF display

Setting the current time and weekday
Note: with a new unit or when the reset button B has been pressed, the first day indicator H on the left and the time display I are flashing.
Press repeatedly the button A until the display shows the symbol ◷.
Press the buttons D or E until the current time appears in the display I.
Press the day selection button G corresponding to the current day, considering that button 1=Monday, button 2=Tuesday and so on.
The clock starts by pressing the button A to show the symbol **AUTO**.
Setting example shown in Fig. 2.34:

USE

Current time 16.30, day Thursday.

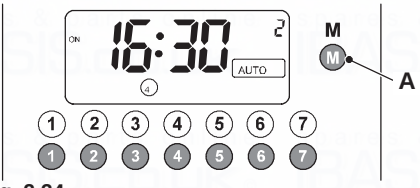

Fig. 2.34

Setting the switching time and day (or days)

28 memory locations are available, corresponding to 14 on-off sequences.

Press repeatedly the button A until the display shows the symbol **C1**.

The symbols shown in Fig. 2.35 appears in the display.

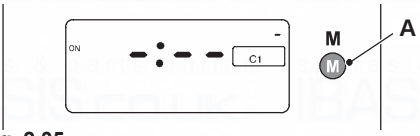

Fig. 2.35

Press the buttons D or E to set the desired ON time.

Press the buttons G to set the desired day or days of operation.

Press the “OK” button C to confirm the setting and to continue programming the OFF time.

Set the OFF time as explained above for the ON setting and confirm by pressing the “OK” button C. Proceed in the same way for other settings.

Setting example shown in Fig. 2.36:

M ON time 7.45, day Monday to Friday.

N OFF time 10.30, day Monday to Friday.

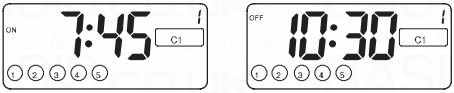

M N

Fig. 2.36

Activating the timed settings

The current time and day appears in the display. The ON-OFF display J indicates the current state of operation (according to the settings).

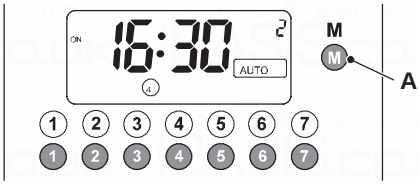

Fig. 2.37

Note: when the display shows the symbol **AUTO** and the boiler is switched off at the fused spur isolation switch, the display J indicates only the OFF state. The other indications are blanked.

Reading the timed settings

Press repeatedly the button A until the display shows the symbol **C1** (Fig. 2.35).

The symbols shown in Fig. 2.35 appears in the display.

Press the “OK” button C. Each time the button is pressed the display shows the details of the next setting.

The day display H gives a flashing indication of the active day or group of days.

Changing or deleting the timed settings

Press repeatedly the button A until the display shows the symbol **C1** Fig. 2.35).

The symbols shown in Fig. 2.35 appears in the display.

Press the “OK” button C until the display shows the setting to be modified or deleted.

The day display H gives a flashing indication of the active day or group of days.

Press the button (or the buttons) G corresponding to the day (or days) for which it is intended to apply the modification. The cor-

USE

responding day display stops flashing and a new switching time can be set or deleted.
The time setting can be modified now by pressing button D or E and the operation can be switched on or off by pressing the button F.
To delete a time set press the button D or E until the symbols shown in Fig. 2.35 appears in the time display I.
The new settings are memorised by pressing the button A.

USE

Manual operation
The operation of the time switch can be forced on or off constantly or for a timed period.
To force **constantly** on or off the timer operation press repeatedly the button A until the display shows the symbol **TIMER**. The symbols shown in Fig. 2.38 appears on the display.

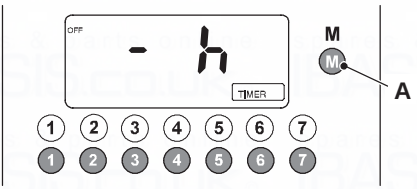

Fig. 2.38

The operation can be switched permanently on or off by pressing the button F and leaving the display shows the symbol **TIMER**.
To force a **timed delay** on or off operation, press repeatedly the button A until the display shows the symbol **TIMER**.
Set the time delay by pressing the button D or E and the operation can be forced on or off by pressing the button F.

The time delay can be set within the following ranges:
1 to 23 hours with steps of 1 hour
1 to 27 days with steps of 1 day

Press the button A until the display shows the symbol **AUTO**.
The ON-OFF display J flashes indicating that the current state of operation has been forced.
To delete the timed delay setting, press repeatedly the button A until the display shows the symbol **TIMER**, press the button D or E until the symbols shown in Fig. 2.39 appears in the display and then press the button A until the display shows the symbol **AUTO**.

Setting example shown in Fig. 2.39:
forced ON state for 4 hours.

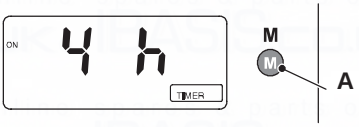

Fig. 2.39

Resetting
To completely reset the timer, press the reset button with a pointed object (pencil).
CAUTION: pushing the reset button will completely erase the settings as well as all the data, including the current time and day.

3 USEFUL ADVICE

3.1 Central Heating

For reasonably economical service install a room thermostat. Never shut off the radiator in the area where the room thermostat is installed.
If a radiator (or a convector) does not heat up, check that no air is present in it and that its valve is open. If the ambient temperature is too high, do not alter the radiator valves. Reduce the central heating temperature instead by means of the room thermostat and the function selector (8 in Fig. 3.1).

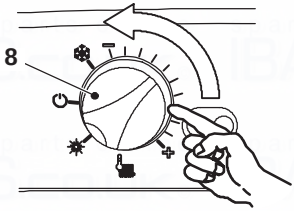

Fig. 3.1

3.2 Frost protection

This appliance is provided with a built in anti-freeze system that operates the boiler when the temperature is below 5 °C
Therefore, when the boiler is not lit and used in cold weather, with consequent risk of freezing **do not switch off the boiler at the fused spur isolation switch or close the gas inlet cock**.

3.3 Condensate drain

The condensate drain must not be modified or blocked. Blockage of the condensate drain, caused by debris or freezing, can cause automatic shutdown of the boiler.
If freezing is suspected and the pipe run is accessible an attempt may be made to free the obstruction by pouring hot water over the exposed pipe an cleaning any blockage from the end of the pipe.
If this fails to remedy the problem the assistance of a Gas Safe registered installer or in IE a competent person should be sought.

3.4 Periodic maintenance

For efficient and continuous operation of the boiler, it is advisable to arrange maintenance and cleaning by an Authorised Service Centre Engineer, at least once a year.
During the service, the most important components of the boiler will be inspected and cleaned. This service can be part of a maintenance contract.

In particular, you are advised to have the following checks carried out:

- primary heat exchanger;
- domestic hot water heat exchanger; burner;
- exhaust fume duct and flue;
- pressurisation of the expansion tank;
- filling up of the central heating circuit;
- bleeding of air from the central heating system;
- general check of the appliance's operation.

3.5 External cleaning

Before carrying out any cleaning, disconnect the appliance from the electrical mains, using the fused spur isolation switch fitted adjacent to the appliance.

To clean the external panels, use a cloth soaked in soapy water. Do not use solvents, abrasive powders or sponges.

Do not carry out cleaning of the appliance and/or its parts with readily flammable substances (for example petrol, alcohols, naphtha, etc.).

3.6 Operational faults

If the lock-out signal lamp comes on

This indicates that the safety lock-out 6 (Fig. 3.2) has stopped the boiler.

To re-start the boiler, it is necessary to press the boiler reset button 7 (Fig. 3.2).

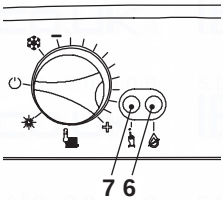

Fig. 3.2

For the first lighting up and following maintenance procedures for the gas supply, it may be necessary to repeat the resetting operation several times so as to remove the air present in the pipe work.

After five consecutive resetting attempts the reset button is inhibited. To restore its function it is necessary to switch the boiler off and on from the electrical mains, using the fused spur isolation switch fitted adjacent to the appliance.

Safety lock-out may occur even in case of a blockage of the condensate drainage (e.g. plugged drain pipe).

It is advisable to check the condensate drainage pipe and traps for cleanness.

In this case and in case of persistent lock-out call a competent and responsible Service Engineer.

If noises due to air bubbles are heard during operation...

You should check that the pressure on the temperature and pressure gauge (Fig. 2.2 on page 10) is not below the correct setting. If required, top up the system correctly, as described in the section "Refilling procedure" to page 10.

Bleed any air present in the radiators, if necessary.

If the pressure on the temperature and pressure gauge has gone down...

It is necessary to top up the appliance with water again, so as to raise the pressure to an adequate level as described in the section "Refilling procedure" to page 10. If topping up with water has to be done very frequently, have the system checked for leaks.

If water comes out of the pressure relief valve

Check on the temperature and pressure gauge that the pressure in the central heating circuit is not close to 3 bars. In this case, temperature rise in the circuit can cause the pressure relief valve to open.

So that this does not happen and to decrease the pressure to a normal value, it is advisable to vent some of the water in the appliance through the bleed valves present in the radiators.

If in time, a reduction in domestic hot water supply is observed...

The likely causes may be impurities caught in the domestic hot water flow switch filter or limescale deposited in the domestic hot water heat exchanger. It is advisable to have the appliance cleaned out by an Authorised Service Centre Engineer.

<u>If water should occasionally leak from the boiler...</u>
Shut off the valves positioned under the boiler (Fig. 2.11 on page 13) and call an Authorised Service Centre Engineer.

If the left appliance operation light 10 (Fig. 3.3) flashes very quickly the boiler is detecting a fault.

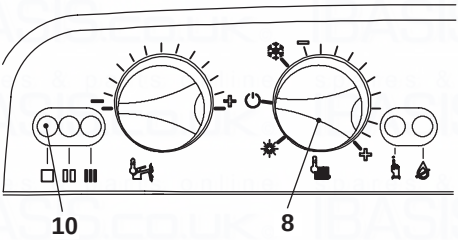

Fig. 3.3

In this case or in case of problems other than those mentioned here, switch off the boiler, as described in section "Extinguishing" to page 13 and call a competent and responsible Service Engineer.

4 TECHNICAL INFORMATION

4.1 Overview

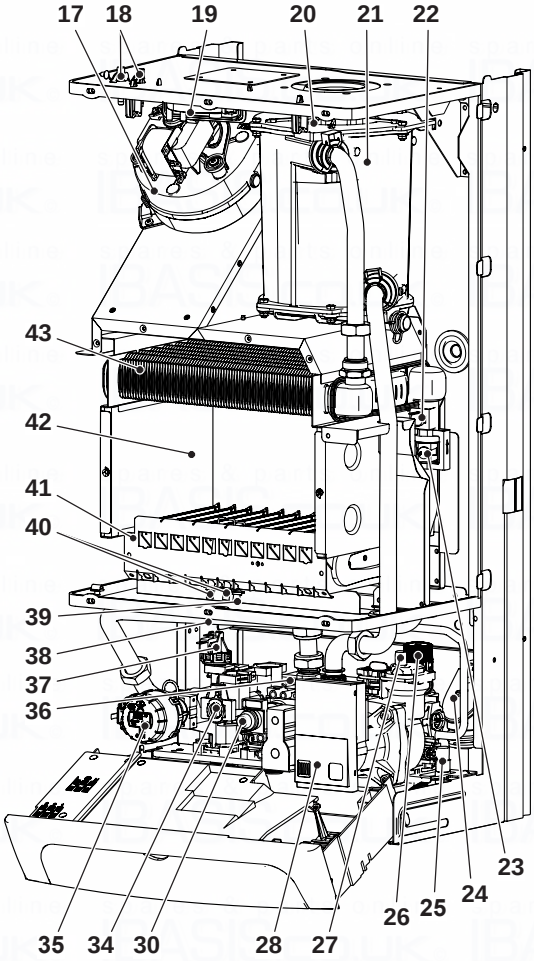

Fig. 4.1

4.2 Main diagram

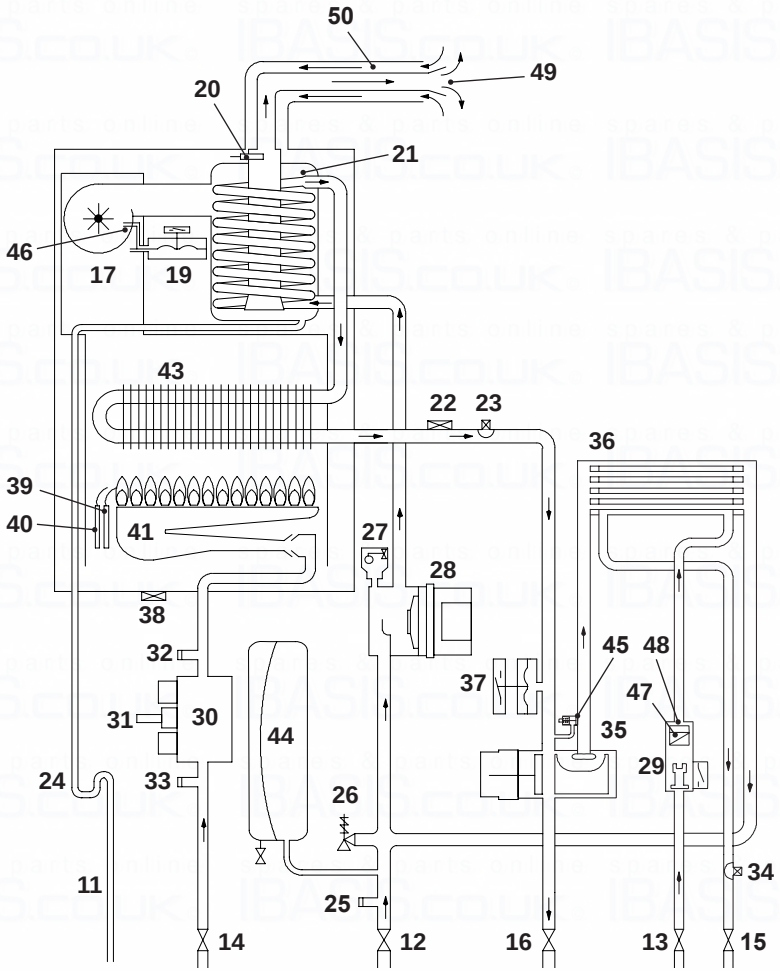

Fig. 4.2

11 Condensate drain pipe
12 C.h. return valve
13 D.c.w. inlet valve
14 Gas inlet valve
15 D.h.w. outlet pipe
16 C.h. flow valve
17 Fan
18 Air pressure sensor test points
19 Air pressure sensor
20 Flue temperature probe NTC
21 Condensing heat exchanger
22 Safety thermostat
23 C.h. temperature probe NTC
24 Condensate trap

25 Main circuit drain valve
26 C.h. pressure relief valve
27 Automatic air purger valve
28 Pump
29 D.h.w. flow switch
30 Modulation gas valve
31 Modulation operator
32 Gas valve outlet pressure test point
33 Gas valve inlet pressure test point
34 D.h.w. temperature probe NTC
35 Three-way diverter valve
36 D.h.w. heat exchanger
37 Primary circuit pressure switch
38 Combustion chamber over heat
39 Flame-detecting electrode
40 Ignition electrode
41 Burner
42 Combustion chamber
43 Primary heat exchanger
44 C.h. expansion tank
45 By-pass valve
46 Fan pressure connection
47 Domestic water circuit filter
48 D.h.w. flow limiter
49 Flue outlet pipe
50 Air intake pipe

spares & parts online IBASIS.CO.UK

4.3 Hydraulic specifications

The hydraulic specifications in Fig. 4.3 represent the pressure (available head for the central heating system) as a function of the flow rate.

The load loss due to the boiler has already been subtracted.

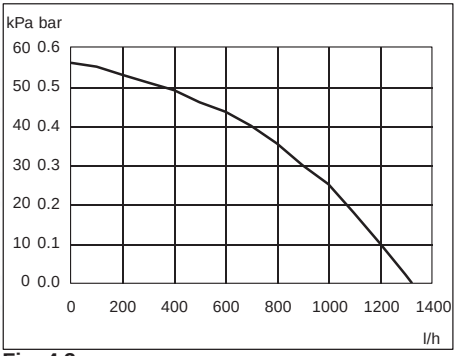

Fig. 4.3

Output with thermostat cocks shut off

The boiler is equipped with an automatic by-pass valve (45on page 28), which protects the condensing primary exchanger.

In case of excessive reduction or total blockage of water circulation in the central heating system owing to closure of the thermostatic valves or system component cocks, the by-pass valve ensures a minimum flow of water through the primary heat exchanger.

4.4 Expansion vessel

Note: this boiler is designed for operation only in a sealed central heating system.

The height difference between the pressure relief valve and the highest point in the system may be 10 m at most.

For greater differences, increase the pre-load pressure in the expansion vessel and the system, when cold, by 0.1 bar for each additional 1 m.

Capacity	l	8,0
Pre-load pressure	kPa	100
	bar	1,0
Maximum volume of water in the system *	l	124

Fig. 4.4

* Where conditions are:

- Average maximum temperature of the system is 85 °C
- Initial temperature when filling up the system is 10 °C

! **For systems with volumes greater than 124l, an additional expansion vessel must be provided.**

4.5 Technical data mod. Riva Plus HE 24C ERP

Heat input		
Nominal net (A) (ch - dhw)	kW	25,0
	BTU/h	85304
Nominal gross (B) (ch - dhw)	kW	27,8
	BTU/h	94687
Minimun net (A) ch - dhw	kW	7,5
	BTU/h	25591
Minimun gross (B) ch - dhw	kW	8,3
	BTU/h	28406

Useful output		
Maximun (ch - dhw)	kW	24,4
	BTU/h	83256
Minimun (ch - dhw)	kW	7,3
	BTU/h	24909
Maximun condensing (ch - dhw)	kW	26,3
	BTU/h	89739
Minimun condensing (ch - dhw)	kW	7,8
	BTU/h	26615

Central heating		
Min/Max flow temperature settings*	°C	50-85
Minimum return temperature	°C	40
Maximum pressure	kPa	250
	bar	2,5
Minimum pressure	kPa	30
	bar	0,3
Available head (in 1000 l/h)	kPa	25
	bar	0,25
Seasonal efficiency G20	%	88,0
Seasonal effciency G30 G31 (C)	%	89,0

* to the minimum useful output

Domestic hot water		
Min/Max temperature settings	°C	35 - 55
Maximum pressure	kPa	1000
	bar	10
Minimum pressure	kPa	30
	bar	0,3
Flow rate minimun	l/min	2,5
Flow rate 30° rise (D)	l/min	11,6
Flow rate 35° rise (D)	l/min	10,0
Flow rate 40° rise (D)	l/min	8,7

Gas supply pressures			
Gas		Pa	mbar
Natural G20	**Nom**	2000	20
	Min	1700	17
	Max	2500	25
Butane G30	**Nom**	2900	29
	Min	2000	20
	Max	3500	35
Propane G31	**Nom**	3700	37
	Min	2500	25
	Max	4500	45

1 mbar approximately equals 10 mm H_2O

INSTALLATION

TECHNICAL INFORMATION

Max. gas pressures at the burner		
Natural G20	Pa	1340
	mbar	13,4
Butane G30	Pa	2760
	mbar	27,6
Propane G31	Pa	3550
	mbar	35,5
Min. gas pressures at the burner		
Natural G20	Pa	140
	mbar	1,4
Butane G30	Pa	280
	mbar	2,8
Propane G31	Pa	350
	mbar	3,5
Ignition gas pressures at the burner		
Natural G20	Pa	850
	mbar	8,5
Butane G30	Pa	2110
	mbar	21,1
Propane G31	Pa	2700
	mbar	27,0

1 mbar approximately equals 10 mm H_2O

Gas rate maximum - ch dhw		
Natural G20	m^3/h	2,65
Butane G30	kg/h	1,97
Propane G31	kg/h	1,94
Gas rate minimum - ch dhw		
Natural G20	m^3/h	0,79
Butane G30	kg/h	0,59
Propane G31	kg/h	0,58

Gas restrictors references	N°	Ø mm /100
Natural G20	12	120
Butane G30	12	77
Propane G31	12	77

Electrical data		
Voltage	V~	230
Frequency	Hz	50
Nominal Power consumption	W	79
Minimum Power consumption	W	65
Stand-by Power consumption	W	3
Protection degree		IPX4D
External fuse rating	A	3
Internal fuse rating	A	N° 2 - 2 AF

Flue design		
Boiler type		
C12 C32 C42 C52 C82		
ø Coaxial	mm	60/100
ø Twin split pipes	mm	80/80
ø Roof	mm	80/125
Nominal heat flow rate (A) (E)	kW	25,0
Exhaust temperature (E)	°C	60,0
Mass flow rate (E)	kg/s	0,0128

Flue gas figures		
Nominal heat input (A) (E)	kW	25,0
CO_2 content with gas G20	%	7,9
O_2 content with gas G20	%	6,8
CO content with gas G20	ppm	52,0
Exhaust temperature (E)	°C	60,0
NOx class		2
Weighted NOx	ppm	94

CO_2 contents - ch dhw		
Nominal heat input [A] [E]	kW	25,0
CO_2 content with gas G20	%	7,9
CO_2 content with gas G30 G31	%	9,1
Minimum heat input [A] [E]	kW	7,5
CO_2 content with gas G20	%	3,9
CO_2 content with gas G30 G31	%	4,5

Other specifications		
Height	mm	803
Width	mm	400
Depth	mm	350
Weight (dry)	kg	36,8
Water volume in the boiler (up to 1 bar)	l (kg)	1,4

[A] referred to the net calorific value at 15°C and 1013,25 mbar: G20 = 34,02 MJ/m³ - G31 = 46,34 MJ/kg

[B] referred to the gross calorific value at 15°C and 1013,25 mbar: G20 = 37,78 MJ/m³ - G31 = 50,37 MJ/kg

[C] The value is used in the UK Government's Standard Assessment Procedure (SAP) for energy rating of dwellings. The test data from which it has been calculated have been certified by a notified body.

[D] Values subject to tolerance

[E] Values refer tests with a 1 m flue working at the nominal heat input

TECHNICAL INFORMATION

Model(s):							**Riva Plus HE 24C ERP**
Condensing boiler:							Yes
Low-temperature boiler (**):							No
B1 boiler:							No
Cogeneration space heater:			No	If yes, equipped with a supplementary heater:			-
Combination heater:							Yes
Item	**Symbol**	**Value**	**Unit**	**Item**	**Symbol**	**Value**	**Unit**
Rated heat output	**P_{rated}**	**25**	**kW**	**Seasonal space heating energy efficiency**	**η_s**	**89**	**%**
For boiler space heaters and boiler combination heaters: Useful heat output				For boiler space heaters and boiler combination heaters: Useful efficiency			
At rated heat output and high-temperature regime (*)	P_4	24,4	kW	At rated heat output and high-temperature regime (*)	η_4	87,7	%
At 30% of rated heat output and low-temperature regime (**)	P_1	7,9	kW	At 30% of rated heat output and low-temperature regime (**)	η_1	95,4	%
Auxiliary electricity consumption				Other items			
At full load	elmax	0,079	kW	Standby heat loss	P_{stby}	0,098	kW
At part load	elmin	0,065	kW	Ignition burner power consumption	P_{ign}	-	kW
In standby mode	P_{SB}	0,003	kW	Annual energy consumption	Q_{HE}	78,685	GJ
				Sound power level, indoors	L_{WA}	48	dB
				Emission of nitrogen oxides	NO_x	166	mg/kWh
For combination heaters:							
Declared load profile	XL			**Water heating energy efficiency**	η_{wh}	86	%
Daily electricity consumption	Q_{elec}	0,132	kWh	Daily fuel consumption	Q_{fuel}	22,756	kWh
Annual electricity consumption	AEC	29	kWh	Annual fuel consumption	AFC	17	GJ
Contact details							See manual cover

(*) High-temperature regime means 60°C return temperature at heater inlet and 80°C feed temperature at heater outlet.

(**) Low temperature means for condensing boilers 30°C, for low-temperature boilers 37°C and for other heaters 50°C return temperature (at heater inlet).

4.6 Technical data mod. Riva Plus HE 28C ERP

Heat input		
Nominal net (A) (ch - dhw)	kW	29,0
	BTU/h	98952
Nominal gross (B) (ch - dhw)	kW	32,2
	BTU/h	109837
Minimun net (A) ch - dhw	kW	8,7
	BTU/h	29686
Minimun gross (B) ch - dhw	kW	9,7
	BTU/h	32951

Useful output		
Maximun (ch - dhw)	kW	28,3
	BTU/h	96564
Minimun (ch - dhw)	kW	8,4
	BTU/h	28662
Maximun condensing (ch - dhw)	kW	30,6
	BTU/h	104411
Minimun condensing (ch - dhw)	kW	9,1
	BTU/h	31050

Central heating		
Min/Max flow temperature settings*	°C	50-85
Minimum return temperature	°C	40
Maximum pressure	kPa	250
	bar	2,5
Minimum pressure	kPa	30
	bar	0,3
Available head (in 1000 l/h)	kPa	25
	bar	0,25
Seasonal efficiency G20	%	88,0
Seasonal effciency G30 G31 (C)	%	89,0

* to the minimum useful output

Domestic hot water		
Min/Max temperature settings	°C	35 - 55
Maximum pressure	kPa	1000
	bar	10
Minimum pressure	kPa	30
	bar	0,3
Flow rate minimun	l/min	2,5
Flow rate 30° rise (D)	l/min	13,6
Flow rate 35° rise (D)	l/min	11,6
Flow rate 40° rise (D)	l/min	10,2

Gas supply pressures			
Gas		Pa	mbar
Natural G20	**Nom**	2000	20
	Min	1700	17
	Max	2500	25
Butane G30	**Nom**	2900	29
	Min	2000	20
	Max	3500	35
Propane G31	**Nom**	3700	37
	Min	2500	25
	Max	4500	45

1 mbar approximately equals 10 mm H_2O

INSTALLATION

TECHNICAL INFORMATION

Max. gas pressures at the burner		
Natural G20	Pa	1330
	mbar	13,3
Butane G30	Pa	2780
	mbar	27,8
Propane G31	Pa	3550
	mbar	35,5
Min. gas pressures at the burner		
Natural G20	Pa	140
	mbar	1,4
Butane G30	Pa	260
	mbar	2,6
Propane G31	Pa	350
	mbar	3,5
Ignition gas pressures at the burner		
Natural G20	Pa	850
	mbar	8,5
Butane G30	Pa	2110
	mbar	21,1
Propane G31	Pa	2700
	mbar	27,0

1 mbar approximately equals 10 mm H_2O

Gas rate maximum - ch dhw		
Natural G20	m^3/h	3,07
Butane G30	kg/h	2,29
Propane G31	kg/h	2,25
Gas rate minimum - ch dhw		
Natural G20	m^3/h	0,92
Butane G30	kg/h	0,69
Propane G31	kg/h	0,68

Gas restrictors references	N°	Ø mm /100
Natural G20	14	120
Butane G30	14	77
Propane G31	14	77

Electrical data		
Voltage	V~	230
Frequency	Hz	50
Nominal Power consumption	W	90
Minimum Power consumption	W	75
Stand-by Power consumption	W	3
Protection degree		IPX4D
External fuse rating	A	3
Internal fuse rating	A	N° 2 - 2 AF

Flue design		
Boiler type		
C12 C32 C42 C52 C82		
ø Coaxial	mm	60/100
ø Twin split pipes	mm	80/80
ø Roof	mm	80/125
Nominal heat flow rate (A) (E)	kW	29,0
Exhaust temperature (E)	°C	60,0
Mass flow rate (E)	kg/s	0,01

Flue gas figures		
Nominal heat input (A) (E)	kW	29,0
CO_2 content with gas G20	%	7,9
O_2 content with gas G20	%	6,8
CO content with gas G20	ppm	53,0
Exhaust temperature (E)	°C	60,0
NOx class		2,0
Weighted NOx	ppm	90

CO_2 contents - ch dhw		
Nominal heat input [A] [E]	kW	29,0
CO_2 content with gas G20	%	7,9
CO_2 content with gas G30 G31	%	9,1
Minimum heat input [A] [E]	kW	8,7
CO_2 content with gas G20	%	3,9
CO_2 content with gas G30 G31	%	4,3

Other specifications		
Height	mm	803
Width	mm	400
Depth	mm	350
Weight (dry)	kg	37,7
Water volume in the boiler (up to 1 bar)	l (kg)	1,5

[A] referred to the net calorific value at 15°C and 1013,25 mbar: G20 = 34,02 MJ/m^3 - G31 = 46,34 MJ/kg

[B] referred to the gross calorific value at 15°C and 1013,25 mbar: G20 = 37,78 MJ/m^3 - G31 = 50,37 MJ/kg

[C] The value is used in the UK Government's Standard Assessment Procedure (SAP) for energy rating of dwellings. The test data from which it has been calculated have been certified by a notified body.

[D] Values subject to tolerance

[E] Values refer tests with a 1 m flue working at the nominal heat input

TECHNICAL INFORMATION

Model(s):							**Riva Plus HE 28C ERP**
Condensing boiler:							Yes
Low-temperature boiler (**):							No
B1 boiler:							No
Cogeneration space heater:			No	If yes, equipped with a supplementary heater:			-
Combination heater:							Yes
Item	**Symbol**	**Value**	**Unit**	**Item**	**Symbol**	**Value**	**Unit**
Rated heat output	**P_{rated}**	**29**	**kW**	**Seasonal space heating energy efficiency**	**η_s**	**89**	**%**
For boiler space heaters and boiler combination heaters: Useful heat output				For boiler space heaters and boiler combination heaters: Useful efficiency			
At rated heat output and high-temperature regime (*)	P_4	28,3	kW	At rated heat output and high-temperature regime (*)	η_4	88,0	%
At 30% of rated heat output and low-temperature regime (**)	P_1	9,2	kW	At 30% of rated heat output and low-temperature regime (**)	η_1	95,2	%
Auxiliary electricity consumption				Other items			
At full load	elmax	0,090	kW	Standby heat loss	P_{stby}	0,113	kW
At part load	elmin	0,075	kW	Ignition burner power consumption	P_{ign}	-	kW
In standby mode	P_{SB}	0,003	kW	Annual energy consumption	Q_{HE}	91,354	GJ
				Sound power level, indoors	L_{WA}	49	dB
				Emission of nitrogen oxides	NO_x	158	mg/kWh
For combination heaters:							
Declared load profile	XL			**Water heating energy efficiency**	η_{wh}	86	%
Daily electricity consumption	Q_{elec}	0,138	kWh	Daily fuel consumption	Q_{fuel}	22,586	kWh
Annual electricity consumption	AEC	30	kWh	Annual fuel consumption	AFC	17	GJ
Contact details							See manual cover

(*) High-temperature regime means 60°C return temperature at heater inlet and 80°C feed temperature at heater outlet.

(**) Low temperature means for condensing boilers 30°C, for low-temperature boilers 37°C and for other heaters 50°C return temperature (at heater inlet).

5 GENERAL REQUIREMENTS

Benchmark places responsibilities on both manufacturers and installers. The purpose is to ensure that customers are provided with the correct equipment for their needs, that it is installed, commissioned and serviced in accordance with the manufacturer's instructions by competent persons and that it meets the requirements of the appropriate Building Regulations. The Benchmark Checklist can be used to demonstrate compliance with Building Regulations and should be provided to the customer for future reference.
Installers are required to carry out installation, commissioning and servicing work in accordance with the Benchmark Code of Practice which is available from the Heating and Hotwater Industry Council who manage and promote the Scheme. Visit www.centralheating.co.uk for more information.

Our Company supports the Benchmark initiative. The Benchmark Checklist is located at the back of this manual and should be completed by the Installing/Commissioning Engineer and handed over to the User for future reference by other visiting Engineers. Also included is the Service Interval Record card that should be completed by the Service Engineer following the annual service maintenance of the boiler and system.
For Ireland (IE), it is necessary to complete a "Declaration of Conformity" to indicate compliance to I.S.813.2002.
This appliance must be installed by a competent person in accordance with the Gas Safety (installation & Use) Regulations.

5.1 Related documents

The installation of this appliance must be in accordance with the relevant requirements of the current Gas Safe (Installation & Use) Regulations, the Local Building Regulations, the current I.E.E. Wiring Regulations, the Regulations and by-laws of the local water undertaking, and in Scotland, in accordance with the Building Standards (Scotland) Regulation. Health and safety document n° 635 "Electricity at work regs.".
It should also be in accordance with the British Standard Codes of Practice:
In Ireland (IE). The installation must be carried out by a Competent Person and installed in accordance with the current edition of I.S.813.2002 "Domestic Gas Installations" the current Building Regulations and reference should be made to the current ETCI rules for electrical installations.

5.2 Location of appliance

The appliance may be installed in any room or internal space, although particular attention is drawn to the requirements of the current I.E.E. Wiring Regulations, and in Scotland, the electrical provisions of the Building Regulations applicable in Scotland, with respect to the installation of the combined appliance in a room containing a bath or shower.
For Ireland (IE), reference should be made to the current edition of I.S.813.2002 and the current ETCI rules for electrical installations.

Where a room-sealed appliance is installed in a room containing a bath or shower, any electrical switch or appliance control, utilising mains electricity should be so situated that it cannot be touched by a person using the bath or shower.

The location must permit the provision of an adequate flue and termination.
For unusual locations special procedures may be necessary and BS 6798 gives detailed guidance on this aspect.
A compartment used to enclose the appliance must be designed specifically for this purpose.

This appliance is not suitable for external installation.

5.3 Flue system

The provision for satisfactory flue termination must be made as described in BS 5440 part 1. For Ireland (IE), refer to I.S.813.2002.
The appliance must be installed so that the flue terminal is exposed to external air.
It must not be installed so that the terminal discharges into an other room or space as an outhouse or lean-to. It is important that the position of the terminal allows a free passage of air across at all times.
The terminal should be located with due regard for the damage or discoloration that might occur to building products in the vicinity.
In cold and/or humid weather water vapour may condense on leaving the flue terminal; the effect of such ”steaming” must be considered.
Pluming may easily occur at the terminal. Where possible, terminal position which could cause a nuisance should be avoided.
The minimum acceptable spacing from the terminal to obstructions and ventilation openings are specified in Fig. 5.1.

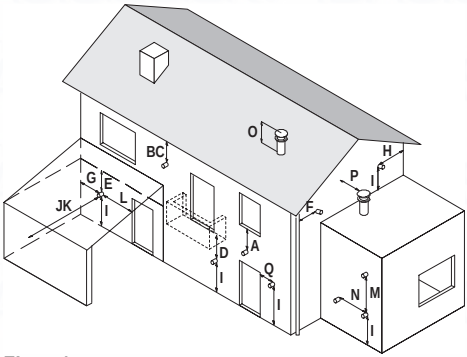

Fig. 5.1

	Terminal position	mm
A	Directly below the window or other opening	300
B	Below gutters, soil pipes or drain pipes	75
C	Below eaves	200
D	Below balconies*	600
E	Below car port roof	NO
F	From vertical drain pipes and soil pipes	150
G	From internal corners**	450
H	From external corners	300
I	Above ground or balcony level***	300
J	From a wall or surface	600
K	From a terminal facing a terminal	2500
L	From an opening in the car port (e.g. door, window) into dwelling	NO
M	Vertically from a terminal in the same wall	1500
N	Horizontally from a terminal in the same wall	300
O	Above the roof pitch with roof slope less than or equal to 30°	350
O	Above the roof pitch with roof slope more than 30°	600
P	From wall face	600
Q	From, above or to side of an opening	300

* Wherever practicable to do so, the flue should be extended beyond the perimeter of the balcony

** Consideration should be given to adding protection against condensate to the adjacent structure

*** Wall terminals with horizontal discharge less than 2.5 m from a car parking space and less than 2,1 m above the ground.
Wall terminals less than 2,1 m above the ground with horizontal discharge of the flue products across a public footway, or a frequently used private access route, or a patio (hard surface area).

5.4 Gas supply

The Gas meter is connected to the service pipe by the local gas region or a local gas region contractor.
If the gas supply for the boiler serves other appliances ensure that an adequate supply is avail-

able both to the boiler and the other appliance when they are in use at the same time.
Pipework must be of adequate size. Pipes of a smaller size than the boiler inlet connection should not be used.
Installation pipes should be fitted in accordance with BS 6891 and the complete installation should be tested for tightness.
For Ireland (IE), refer to I.S.813.2002.

5.5 Air supply

The room in which the boiler is installed does not require a purpose provided air vent.

5.6 Ventilation

If installed in a cupboard or compartment, it is not necessary to provide additional ventilation for cooling for this particular product. However consideration must be given to clearance requirements for maintenance (section "Precautions for installation" to page 43) and under no circumstances must stored articles be allowed to come into contact with the boiler or flue pipe.

5.7 Condensate drain

Ensure that the condensate discharge complies with the national or local regulations in force. The condensate pipe must be fitted in accordance with Building Regulations.
Drain pipe material should be resistant to acid as the condensate is slightly acid with a pH less than 6.5. The boiler includes a trap (24on page 27) that prevents the combustion products entering the drain.
The boilers incorporate a condensate trap with a 75 mm seal to comply with BS 6798: 2008.
The schematic diagrams of possible connections are given in Fig. 5.2 and Fig. 5.3. The length of the condensate pipe should be kept to a minimum, any external pipe should not be more than 3 m in 32 mm pipe and insulated to prevent freezing.

To avoid condensate being trapped:
- the drain pipe should be run with a fall of at least 2.5° (45 mm/m) away from the boiler;
- the number of bends and joints should be kept at minimum.

The drain pipe should be adequately fixed to prevent pipe sagging.
If a part of the drainpipe runs externally this part should be kept as short as possible and protected to reduce the risk of freezing.

Connection of condensate drainage pipe to internal soil and vent stack.

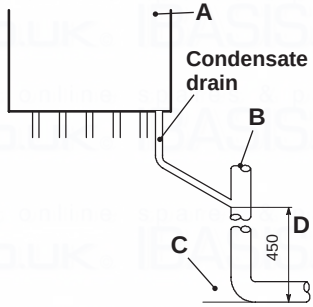

Dimensions in mm

Fig. 5.2

A Boiler
B Internal soil and vent stack
C Invert
D 450 mm up to three storeys

Connection of condensate drainage pipe downstream of a sink waste trap

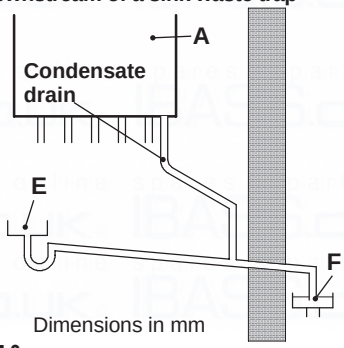

Dimensions in mm

Fig. 5.3

INSTALLATION

A Boiler
E Sink
F Open end of condensate drainage pipe direct into gully below grating but above water level

5.8 Water circulation (c.h.)

Detailed recommendations are given in BS 6798, BSEN 12828: 2003, BSEN 12831: 2003 & BSEN 14446: 2004; the following notes are given for general guidance.
For Ireland (IE), refer to I.S.813.2002.

Pipework

The return temperature must not be lower of 40°C. Copper tubing to BSEN 1057 is recommended for water pipes. Jointing should be either with capillary soldered or with compression fittings.
Where possible pipes should have a gradient to ensure air is carried naturally to air release points and water flows naturally to drain taps.
The appliance has a built-in automatic air release valve, it should be ensured as far as possible that the appliance heat exchanger is not a natural collecting point for air.
Except where providing useful heat, pipes should be insulated to prevent heat loss and to avoid freezing.
Particular attention should be paid to pipes passing through ventilated spaces in roofs and under floors.

By-pass

The appliance includes an automatic by-pass valve which protects the main heat exchanger in case of reduced or interrupted water circulation through the heating system due to the closing of thermostatic valves or cock-type valves within the system.
The by-pass is calibrated to assure a minimum flow of 200-300 lts/hr through the main heat exchanger.
If you are installing a system that includes thermostatic radiator valves (TRV) and/or small bore (8-10 mm) it may be necessary to fit an external by-pass to facilitate correct operation of the boiler.
The fitting of an external bypass helps to prevent and limit system noise.

Air release points

These must be fitted a tall high points where air will natural collect and must be sited to facilitate complete filling of the system.

Expansion vessel

The appliance has an integral sealed expansion vessel to accommodate the increase of water volume when the system is heated. Refer to Fig. 4.4 on page 29 for its technical data.
If the heating circuit has an unusually high water content, calculate the total expansion and add an additional sealed expansion vessel with adequate capacity.

Mains water feed: central heating

There must be no direct connection to the mains water supply even through a non return valve, without the approval of the Local Water Authority.

Mains water feed: hot water supply

The domestic section of the boiler is designed to withstand an internal domestic water pressure of 10 bar. Where it is likely that the mains domestic water pressure may exceed 5 bar, it is possible due to internal “water hammer” effects that the pressure within the domestic system can increase to a level in excess of the 10 bar limit.
In these circumstances it is therefore recommended that a 3 bar pressure reducing valve be fitted to the incoming mains water supply and a mini expansion vessel installed on the domestic circuit.
These devices will protect the boiler and the domestic system from damage due to excessive domestic water pressure.

Filling

A method for initially filling the system and replacing water lost during servicing must be provided and it must comply with local water authority regulations.

The correct method is shown in Fig. 5.4.

The temporary connection must be removed immediately after filling.

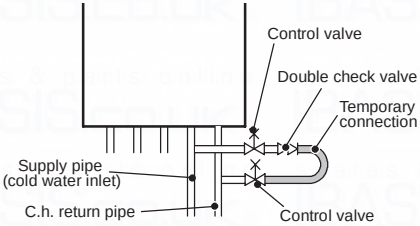

Fig. 5.4

The installer should ensure that no leaks exist either inside the boiler or on the system as frequent filling of the system could cause premature scaling of the heat exchanger.

5.9 Domestic water

The domestic water installation must be in accordance with the relevant recommendations of BS 5546. Copper tubing to BS EN 1057 is recommended for water carrying pipework and must be use for pipework carrying potable water.

For Ireland (IE), refer to I.S.813.2002.

5.10 Water treatment

C.h. circuit

Where a new boiler is fitted to a new system with either plastic or copper pipes, it is important the system is fully flushed, on completion, to ensure flux residues, swarfs, oils and other installation debris is removed.

Where a new boiler is fitted to an existing system, it is important the debris from the existing system is fully removed in order to ensure the efficiency of the new appliance is maintained.

Details on flushing procedure are given in the section "Initial filling of the system" to page 51 of this manual.

D.h.w. circuit (scale protection)

In areas where the water is 'hard' (i.e. more than 200 ppm total hardness as defined by BS 7593: 2006 Table 2) it is recommended that a proprietary scale-reducing device is fitted into the boiler cold supply, within the requirements of the local water company.

5.11 Electrical supply

Warning, this appliance must be earthed

External wiring to the appliance must be carried out by a competent person and be in accordance with the current I.E.E. Regulations and any local regulations which apply.

Reference should be made to the current ETCI rules for electrical installations.

For Ireland (IE), refer to I.S.813.2002.

The boiler is supplied for connection to a 230 V~ 50 Hz supply. The supply must be fused at 3A.

The method of connection to the electricity supply must facilitate complete electrical isolation of the appliance by the use of a fused spur isolation switch. Its installation permits a complete switching off in the conditions of the overvoltage category III. Alternatively it can be used a 3A fused three pin plug and unswitched shuttered socket outlet both complying with BS 1363.

The point of connection to the electricity supply must be readily accessible and adjacent to the appliance, except where the appliance is installed in a bathroom, this must then be sited outside the bathroom.

6 INSTALLATION

6.1 Warnings

The use of gas appliances is subject to statutory control; it is essential to observe the current regulations and laws in force (see also chapter 5).
The appliance must discharge combustion products directly outside or into a suitable exhaust duct designed for this purpose. Combustion products must be discharged using original flue kits only, since they are integral parts of the boiler.

For LPG, the appliance must also conform with the requirements of the distributors and comply with current Regulations and laws in force.
The safety relief valve and the condensate drain must be connected to a suitable drain, or discharge in a safe manner.

The electrical wiring must conform with current Regulations, in particular:
- The boiler must be earthed using the correct bonding clamp.
- Adjacent to the boiler a fused spur isolation switch must be installed which permits a complete switching off in the conditions of the overvoltage category III.

Refer to section "Electrical connections" to page 48 in this chapter for the electrical connections.

In no circumstances will the manufacturer be held responsible if the warnings and instructions contained in this manual have not been complied with.

6.2 Precautions for installation

The following prescriptions must be respected for installation:

- The boiler must be fixed to a strong wall.
- The dimensions for the exhaust fume duct (detailed in section "Choice of flue" to page 46) and the correct procedures for installing the duct, depicted in the instruction leaflet included with the flue kit, must be complied with during installation.
- To allow maintenance procedures it is necessary to leave the minimum gaps indicated in Fig. 6.1.

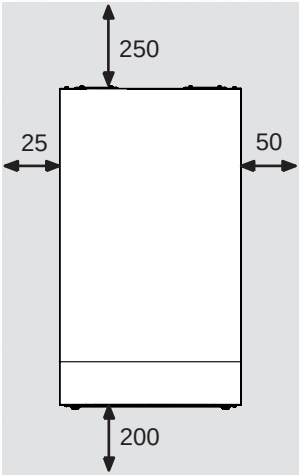

All measures are in mm

Fig. 6.1

- When installing the boiler in a cupboard, cover or alcove allow at least 50 mm permanent clearance from the front face of the boiler. Also ensure sufficient clearance to allow free access for servicing and the lowering of the front control panel.

- If the boiler is installed outside, cover the appliance to protect it against the elements and add some special anti-freeze (neutralised) to the c.h. system.

- Before installing the boiler on an existing c.h. system, flush it out thoroughly before fitting the boiler, so as to remove muddy deposits.

It is advisable to equip the system with a sediment filter, or use a water-treatment product in the circulating water.
The latter option in particular, not only cleans out the system, but also has an anti-corrosive effect by promoting formation of a protective skin on metal surfaces and neutralising gases present in the water.
We recommend the use of a suitable universal inhibitor to protect the c.h. system from corrosion.

6.3 Installing the bracket

Precautions

Before mounting the bracket, check that the dimensions for fitting the exhaust fume duct are complied with (refer to the leaflet included with the flue kit, packed separately).
Utilise the paper template supplied with the boiler to determine the fixing position for the bracket and boiler. Securely mount the bracket to the wall using appropriate fixings suitable for the type of wall construction and capable of supporting the total (wet) load. Refer to the weight given in the technical data tables specific for each model.

6.4 Overall dimensions

The boiler respects the following dimensions:

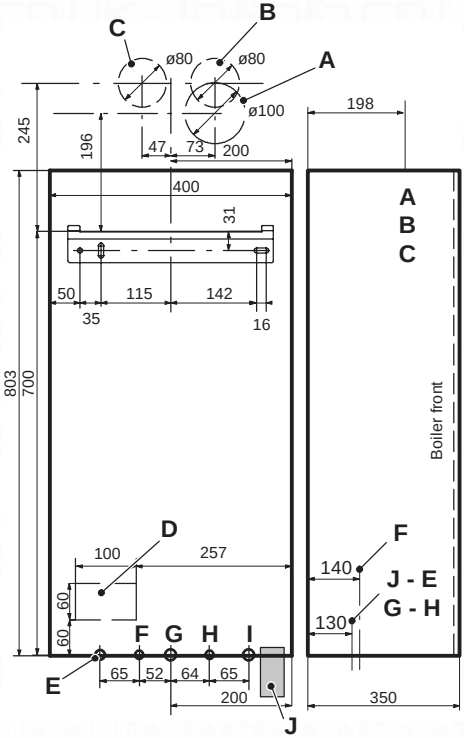

Fig. 6.2

A Flue outlet / air intake pipe (co-axial)
B Flue outlet pipe ø 80 mm (twin kit)
C Air intake pipe ø 80 mm (twin kit)
D Electric connections area
E C.h. flow
F D.h.w. outlet
G Gas
H D.c.w. inlet
I C.h. return
J Condensate drain connection area

6.5 Joints

Functions	Pipe sizes (o.d)
Gas, c.h. return, c.h. flow	ø 22
D.c.w. inlet	ø 15
D.h.w. outlet	ø 15
Pressure relief valve	ø 15
Condensate drain	ø 25 (plastic)

sizes in mm o.d.

6.6 Mounting the boiler

- Take the protective caps off the boiler pipework.
- Thoroughly clean the connections.
- Mount the boiler on its bracket.
- Fix the c.h. valves A and gas cock B (¾") to the boiler using the ¾" gaskets (Fig. 6.3).
- Fix the ø 22 mm pipes C (c.h. circuit) to the c.h. valves A and the ø 22 mm pipe D (gas) to the cock B using the ¾" gaskets.
- Repeat the above procedure for the d.c.w. inlet utilising the ½" cold water inlet valve J, the ø 15 mm copper tail E with its connection nut and two ½" gaskets.
- Fix the ø 15 mm copper tail F with the ½" connection nut and a ½" gasket.

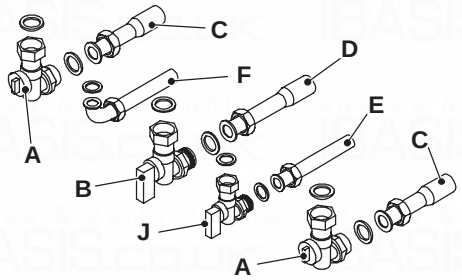

Fig. 6.3

- Connect the pipe G (Fig. 6.4) from the pressure relief valve to the safety discharge pipework.
- Fit the condensate drain 11 (Fig. 6.4) in the air brake connected to the drainage pipework. See also section "Condensate drain" to page 40.

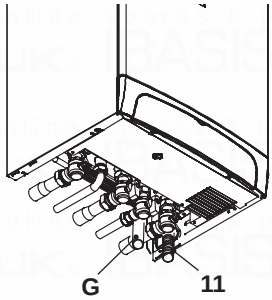

Fig. 6.4

6.7 Fitting the flue system

Refer to the assembly instructions contained within the chosen flue kit packaging for the correct assembly and installation.

In general, it has to be taken in consideration that the horizontal sections of the flue pipe must have an horizontal sloping not less than 1.5 deg. (25 mm per metre) towards the boiler.

In the standard horizontal flue kit the flue pipe is angled within the air duct therefore the air duct must be horizontally installed.

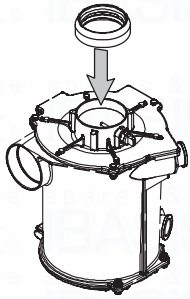

Fig. 6.5

If one or more extensions have to be used they must be adequately supported so that

there is no sag in the flue pipe and a minimum fall of 1,5 deg. (25 mm per metre) over the whole length towards the boiler is ensured.
Before fitting the flue system, ensure that the flue gasket shown in Fig. 6.5 (given with the boiler) is fitted to the boiler.

6.8 Choice of flue

The following flue kits are available for connecting to the boiler:

Standard horizontal flue kit (Fig. 6.6 A)

Type C_{13}

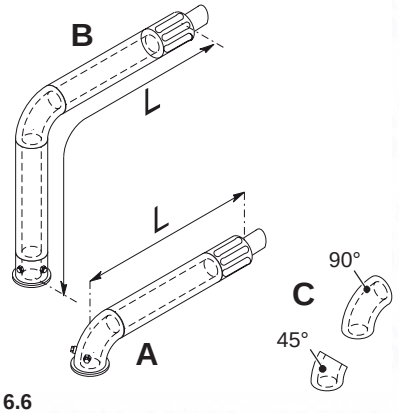

Fig. 6.6

Co-axial 60/100 mm - nominal length 1 m
This kit can be fitted to allow discharge to the rear or either side of the boiler via the flanged boiler adapter elbow. Minimum length required is 0.3 m. Maximum equivalent length of 2,5 metres can be achieved utilising extensions. This flue system can only be used to discharge horizontally, it is not designed to enable termination in the vertical plane.

Vertical kit with 90° elbow (Fig. 6.6 B)

Co-axial 60/100 mm.
Supplied with a straight flanged adapter a co-axial elbow and a co-axial pipe with terminal, this kit allows for a vertical rise of 0,5 m from the boiler. In all circumstances the flue terminal must discharge horizontally and the equivalent flue length must not exceed 2,7 metres.

Elbows 45° & 90° (Fig. 6.6 C)

Coaxial 60/100 mm.
Elbow kits enable the standard flue kits to be offset to overcome obstructions or ensure the correct clearances for the flue terminal. Each elbow used in addition to the standard flanged elbow reduces the overall acceptable length of the flue system as follows:

For the elbow of 45° loss	0,5 m
For the elbow of 90° loss	1 m

Twin pipe kits ø 80 mm (Fig. 6.7 - Fig. 6.8)

Type C_{12}

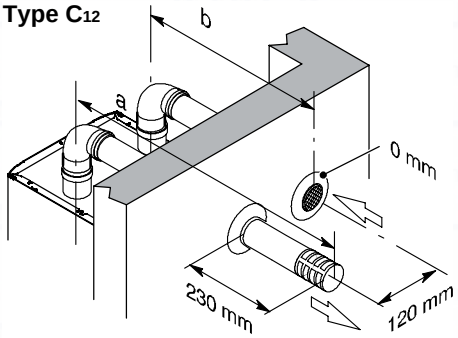

Fig. 6.7

Various twin (split) pipes kits and optional accessories (elbows) are available to assist in the termination of the flue where the boiler is installed in a location remote to an outside wall.
These kits allow for separation of the air

supply pipe from the pipe that discharges the exhaust gasses. Consequently it is possible to extend the flue system to a greater distance than that provided by the standard horizontal co-axial flue.

If either an additional 45° or 90° accessory elbow is used then the maximum permissible length of either pipe must be reduced by 0.90 m or 1,65 m respectively.

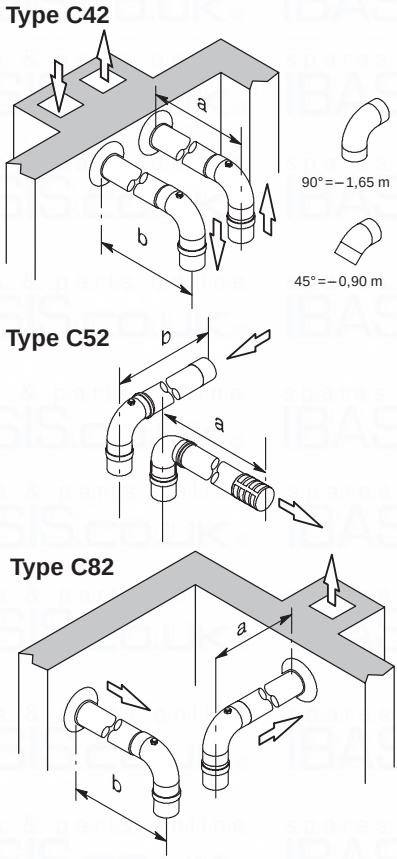

Fig. 6.8

N.B: The air intake and the flue outlet must not terminate on opposite sides of the building.

Two restrictors with different size are supplied with the twin pipe kit and have to be installed between the boiler and the air intake adapter (Fig. 6.9).

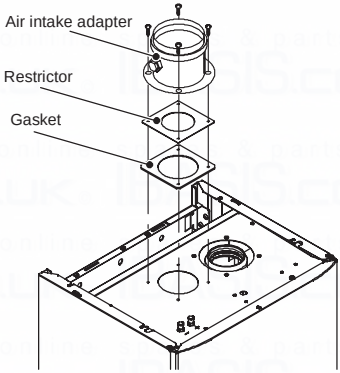

Fig. 6.9

For the correct use of the restrictors with twin pipes refer to the table:.

Equivalent length (air duct + flue duct)	Restrictor
Between 1 and 15 m	ø 50 mm
More than 15 m up to 30 m	ø 55 mm

Vertical- roof kit (Fig. 6.10)

This kit allows vertical termination of the flue pipe through the roof. The kit is 1.2 min length. Extension pieces (Co-axial) are also available which allows the flue system to be extended to a total overall maximum permissible length.

Optional 45° and 90° elbow scan be used to offset the flue route. Each additional elbow reduces the overall acceptable length of the flue system as follows:

For the elbow of 45° loss	0,5 m
For the elbow of 90° loss	1 m

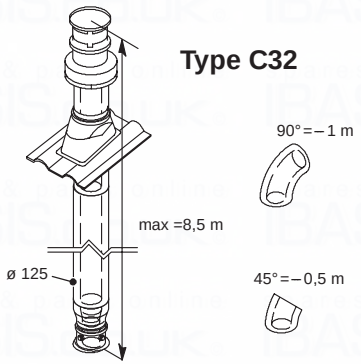

Fig. 6.10

Pluming kit (Fig. 6.11) (Fig. 6.11)

Co-axial ø 60/100 mm + vertical part ø 60 mm (flue outlet).

This kit allows the combustion air to be sucked up and expel the burnt gases directly to the outside through a telescopic co- axial flue (450-950 mm).

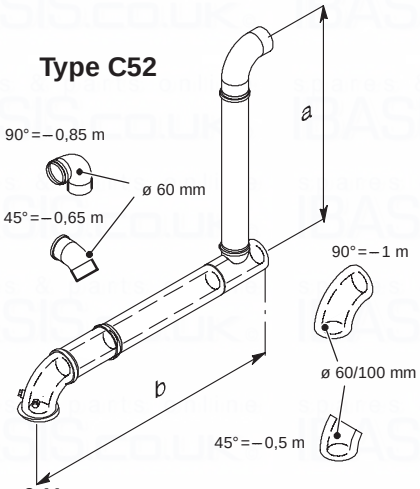

Fig. 6.11

In the last section, the fumes are expelled through a vertical section.

Extensions and elbows can be added to extend the kit's length.

The chart of Fig. 6.12 gives the allowable dimensions of the ducts "**a**" and "**b**" of Fig. 6.11.

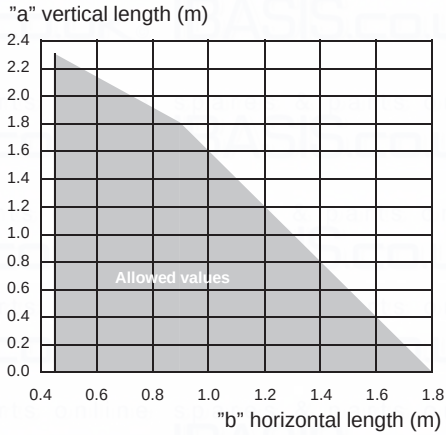

Fig. 6.12

Each additional elbow reduces the overall acceptable length of the flue system as follows:

45° (60/100 mm) reduce length by 0,5 m.
90° (60/100 mm) reduce length by 1 m.
45° (60 mm) reduce length by 0,65 m.
90° (60 mm) reduce length by 0,85 m.

6.9 Electrical connections

- Remove the front panel of the case (see the section 9.2 in this manual).
- Remove the screws K (Fig. 6.13).
- Loosen the screws L.

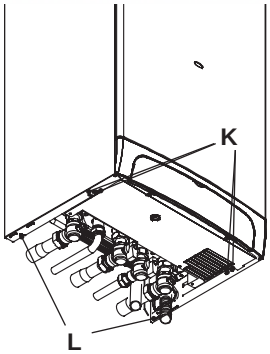

Fig. 6.13

- Remove the side panels or move the lower part of the side panels as indicated in Fig. 6.14 and pull the control panel. When completely pulled out, the panel can rotate 45° downwards to facilitate the operations on the internal parts.

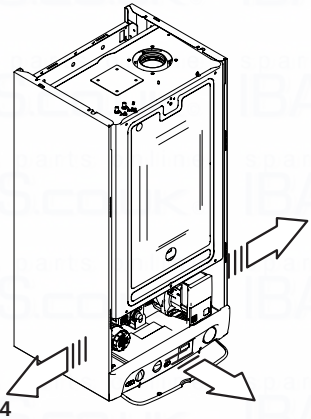

Fig. 6.14

- Loosen the screws M and remove the service panel (Fig. 6.15).

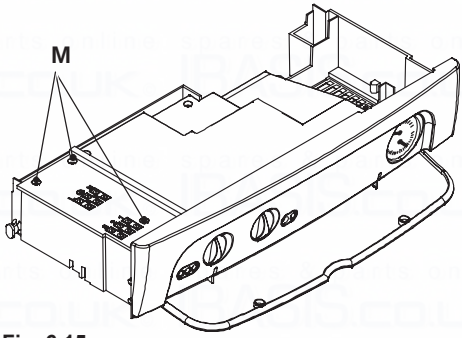

Fig. 6.15

For the electrical connection to the boiler use electric wire switch conform to the current regulations, with flexible cord, each core having a cross section area **not less than 0,75 mm²**.

- Connect the electrical supply flexible cord coming from the fused spur isolation switch to the power supply terminal block of the boiler (Fig. 6.16) keeping the same connections for the live (brown wire) and the neutral (blue wire). External 3 A fuse or fused plug with same current rating is recommended. **Do not connect live wires to terminals to which the room thermostat must be connected.**
- **Connect the earth wire (yellow/green).**

Connection of a room thermostat

The room thermostat must be connected to the terminal block situated next to the control panel.

When connecting any type of external control, the link N in Fig. 6.16 must be removed.

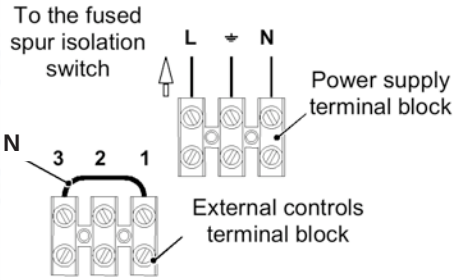

Fig. 6.16

- Connect the room thermostat between terminals 1 and 3 as shown in Fig. 6.17.

Do not connect live wires to terminals to which the room thermostat must be connected.

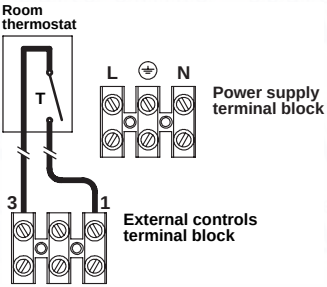

Fig. 6.17

- Route the electrical supply flexible cord and the external control flexible cord as illustrated in Fig. 6.18. Lock the flexible cords in place with the flexible cord clamps.

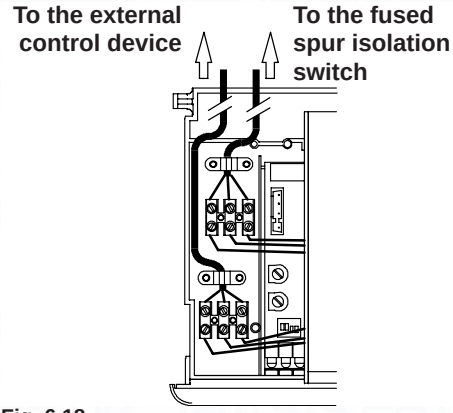

Fig. 6.18

6.10 External frost protection

- Connect the frost thermostat between terminals 1 and 2 as shown in Fig. 6.19. **Do not connect live wires to terminals to which the room thermostat must be connected.**

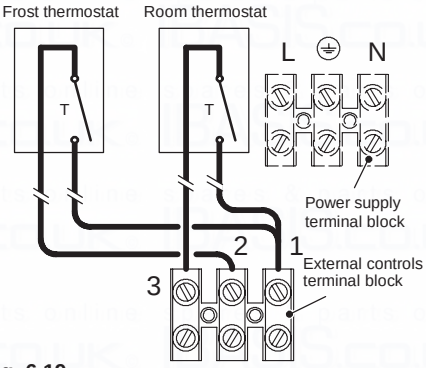

Fig. 6.19

7 COMMISSIONING

7.1 Warnings

The commissioning of this boiler and system must only be undertaken by a professionally qualified person in accordance with the requirements of the Gas Safe Installation and Use Regulations and be approved by Gas Safe.

Ensure that the Benchmark Checklist is satisfactorily completed during the commissioning process. The Checklist is located at the end of this manual. This manual should be handed to the User following completion of the installation and commissioning process. Failure to comply with these requirements may invalidate the manufacturers guarantee.

For Ireland (IE), it is necessary to complete a "Declaration of Conformity" to indicate compliance to I.S.813.2002.

7.2 Electrical installation

Preliminary electrical system checks to ensure electrical safety shall be carried out by a competent person. i.e. polarity, earth continuity, resistance to earth and short circuit. If a fault has occurred on the appliance the fault finding procedure should be followed as specified in the service manual.

7.3 Gas supply installation

- Inspect the entire installation including the gas meter, test for tightness and purge, all as described in BS 6891;
  For Ireland (IE), refer to I.S.813.2002.
- Open the gas cock 14 (Fig. 7.1) on the appliance and check the gas connector on the appliance for leaks.

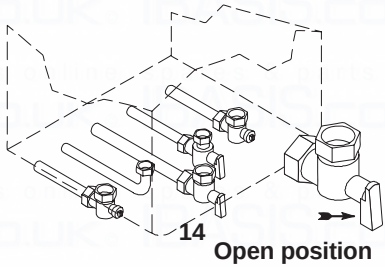

Fig. 7.1

7.4 Filling the d.h.w. system

- Close all hot water draw-off taps.
- Open the cold water inlet valve.
- Slowly open each draw-off tap and close it only when clear water, free of bubbles, flows out.

7.5 Initial filling of the system

- Open the c.h. flow and return valves.
- Remove the front panel of the case (section "Dismantling the external panels" to page 59).
- Unscrew the cap on the automatic air purger valve 27 in Fig. 7.2 one full turn and leave open permanently.

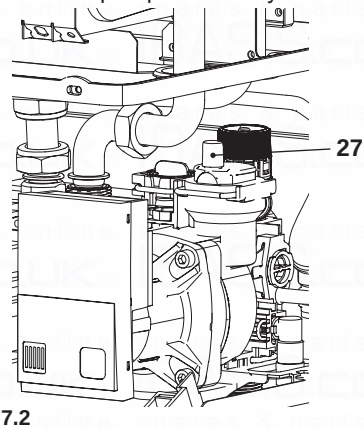

Fig. 7.2

- Gradually open stopcock at the filling point connection to the c.h. system until water is

INSTALLATION

heard to flow; do not open fully.

- Open each radiator air vent starting at the lowest point of the system and close it only when clear water, free of bubbles, flows out.
- Continue filling the system. The actual reading should ideally be 1,3 bar and not less than 0,3 bar.
- Close all air release valves on the c.h. system.
- Inspect the boiler and the system for water soundness and remedy any leaks discovered.
- Cold flush the system to remove any loose particles and any system debris before starting the boiler for the first time

The flushing procedure must be in line with BS7593:2006 Treatment of Water in d.h.w. c.h. Systems.
When the installation and second filling are completed turn on the c.h. system and run it until the temperature has reached the boiler operating temperature. The system must then be immediately flushed through.
This procedure must be repeated twice more.
During this operation we highly recommend the use of a c.h. flushing detergent in the quantities as specified by the appropriate manufacturer, whose function it is to dissolve any foreign matter which may be in the system.
The above operation could save the invalidation of your boilers guarantee and will also prevent problems which you may experience in the future if an inhibitor is not used.

Check pump operation/pump release
The pump electronic control circuit automatically releases the pump.

- Turn on the electricity supply to the boiler, switching on the fused spur isolation switch. The appliance operation light 10 will flash every 4 seconds.
- Turn the function selector 8 as in Fig. 7.3. The appliance operation light 10 will flash every 2 seconds.

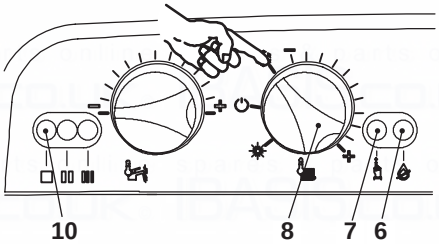

Fig. 7.3

The boiler will now go through an ignition sequence and the burner will light.

- Make sure that the ambient thermostat is in the “heat demand” position.
- Check that the boiler with the gas cock shut-off goes into ignition lockout (Er01) and, in the meantime, check the pump release.
- The pump release can be verified by checking that the pump motor vibrates.
- If the pump motor does not vibrate, release the boiler from its lockout due to gas failure by pressing the reset button on the control panel and repeat the sequence a maximum of 10 times.
- If the pump does not release, contact technical support.
- Once the pump has been released, open the gas cock and check that the boiler operates correctly both in domestic hot water and heating modes.
- Check the gas pressures and flow rates as shown in section "GAS CONVERSION" to page 57 of this booklet.
- Check that the condensate produced during functioning fills the pipe and is regularly drained in the draining plant pipe.
- To turn the boiler off set the function selector 8 to the position shown in Fig. 7.4. The appliance operation light 10 will flash

every 4 seconds.

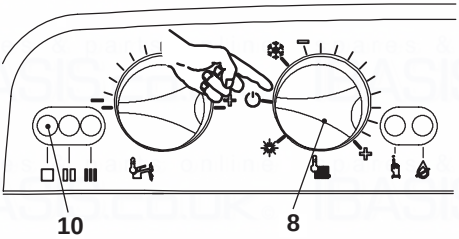

Fig. 7.4

If during the ignition attempt period the boiler fails to light, the full sequence control p.c.b. will go to lockout and the lock-out signal lamp 6 will appear.
To reset the boiler press and release the boiler reset button 7.

7.6 Condensate pipe and traps

The full length of the condensate pipe should be check for leaks.
The boiler has a built-in condensate trap provided with a ball valve that prevents the escape of combustion products when the trap is empty.
It is however recommended that any other trap in the drain system is correctly filled with water before to run the boiler.

Fill the built in condensate trap by removing the flue elbow and pouring a cupful of water into the flue outlet (Fig. 7.5).

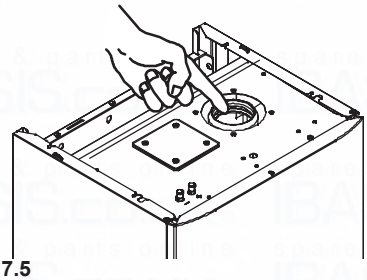

Fig. 7.5

An alternative, to the removal of the flue elbow, pour the water through the flue sampling point (Fig. 7.6)

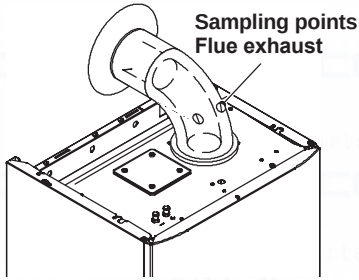

Fig. 7.6

7.7 Lighting the boiler

Some products incorporate an anti cycling time delay. It is normal when first switching the boiler on for the boiler to operate on heating for a few seconds then switch off. After 3-4 minutes has elapsed the boiler will then re ignite and operate perfectly normally. The ignition delay cycle does not prevent normal operation of the boiler to provide d.h.w.
If external controls are fitted (e.g. Timeclock, room thermostat) ensure they ”call for heat”.

- Turn on the electricity supply to the boiler, switching on the fused spur isolation switch. The appliance operation light 10 will flash every 4 seconds.
- Turn the function selector 8 as in Fig. 7.7. The appliance operation light 10 will flash every 2 seconds.

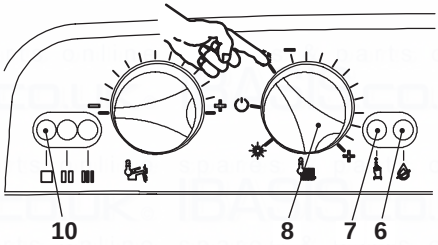

Fig. 7.7

The boiler will now go through an ignition sequence and the burner will light.

If during the ignition attempt period the boiler fails to light, the full sequence control p.c.b. will go to lockout and the lock-out signal lamp 6 will appear.
To reset the boiler press and release the boiler reset button 7.

7.8 Checking the gas pressure at the burner

This boiler has been factory tested to the highest quality control standards.
The maximum and minimum gas pressures are already set during this quality control process however the checking procedure must be followed to ensure maximum operating efficiency from the boiler.

- Remove the front panel of the case (see section "Dismantling the external panels" to page 59) and the sealed chamber lid.
- Loosen the internal screw 32 (Fig. 7.8) on the Outlet Pressure Test Point of the Gas Valve and connect a pressure gauge using a suitable hose.
- Set the d.h.w. and c.h. temperature control knobs to their maximum position. If external controls are fitted (e. g. Timeclock, room thermostat) ensure they ”call for heat”.
- Switch on the boiler and open at least one hot water tap fully.
- Check the maximum gas pressure and compare the value on the gauge with the value indicated in the sections "Technical Data" on pag. 30 or pag. 34 (gas pressures at the burner), accordingly with the model of boiler installed.
- Check the maximum gas flow at the gas meter and compare the value indicated in the sections "Technical Data" on pag. 30 or pag. 34 (gas rate), accordingly with the model of boiler installed.
- Switch off the boiler.
- Disconnect the gas modulator coil by removing the electrical connector A (Fig. 7.8).

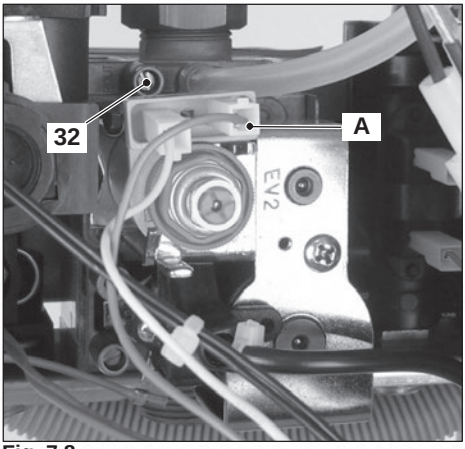

Fig. 7.8

- Switch on the boiler.
- Check the minimum gas pressure and compare the value on the gauge with the value indicated in the sections "Technical Data" on pag. 30 or pag. 34 (gas pressures at the burner), accordingly with the model of boiler installed.
- Switch off the boiler and re-connect the electrical connector A to the modulator coil.
- Switch on the boiler.
- Check that the boiler lights up uniformly. If not refer to section “*Ignition gas pressure adjustment*” of the Service Manual for the necessary adjustment procedures.
- Switch off the boiler, turn off the hot water tap(s) and disconnect the pressure gauge.
- Reassemble the sealed chamber lid and the front panel of the case (see "Dismantling the external panels" to page 59).

If the maximum and minimum gas pressures measured above are not in accordance with the technical data (sections "Technical Data" section pag. 30 or pag. 34) then adjustment will be necessary. A full explanation of the gas pressure ad-

justment procedure is given in the Gas Valve section of the service manual. If maximum and/or minimum gas pressures are adjusted then the ignition gas pressure must be checked and adjusted if necessary.

Important: after the gas pressure checks and any adjustment operations, all of the test points and adjustment devices must be sealed. Replace the adjustment protection cap.

7.9 Checking the burner ignition

- Turn the boiler OFF.
- Open the gas valve outlet pressure test point 32 (Fig. 7.8) and connect the gauge.
- Turn the boiler ON positioning the control selectors 8 in the positions as shown in as in Fig. 7.9 and ensure that the timer selector switch and room thermostat, if fitted, are set to “heat demand”.

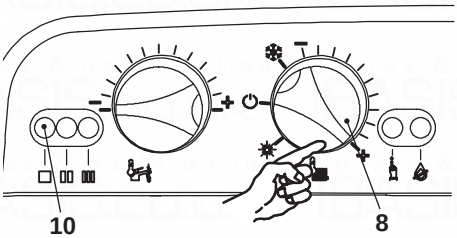

Fig. 7.9

- Watch the gauge and check to see if the ignition pressure registered corresponds to the values as given in the Technical Data. Turn off the boiler and reignite it by turning the function selector 8 to the OFF position and then back to that indicated in Fig. 7.9.
- Repeat this process two to three times leaving 30 second intervals between each ignition. Check the ignition pressures and visually check that the burner lights uniformly and in a controlled manner.
- If the burner ignition is not uniformly controlled then checks should be made to:
  - the flue installation and termination.
  - that the flue gasket as shown in Fig. 6.5 on page 45 is in place.
  - that the burner and injectors are clean.
  - that the boiler is set for the correct gas used (see "GAS CONVERSION" to page 57).
- If the ignition pressure recorded is not as indicated in the Technical Data then refer to section “Ignition gas pressure adjustment” of the Service Manual for the necessary adjustment procedures.

Important: after the gas pressure checks and any adjustment operations, all of the test points must be sealed and replace the adjustment protection cap.

7.10 Checking the ignition device

With the burner on high flame close the gas cock.
After three ignition attempts (within about three minutes), the lock-out signal lamp 6on page 8 must appear.
To reset the boiler press and release the boiler reset button 7on page 8.

7.11 Checking the flue system

The flue system should be visually checked for soundness. Check all clamps, gaskets and fixing are secure and tight.
Ensure that the flue terminal is sited correctly in accordance with the flue fitting instructions and Fig. 5.1 on page 39 of this manual.
To carry out a combustion check refer to the instructions given in the section "Combustion analysis check" to page 60.
Reference figures are given in the "Technical Data" section page 30 of this manual (Flue gas figures).

7.12 Check pump operation/pump release

The pump electronic control circuit automatically releases the pump.
Connect the boiler to the mains .
Make sure that the ambient thermostat is in the "heat demand" position.
Check that the boiler with the gas cock shut-off goes into ignition lockout (Er01) and, in the meantime, check the pump release.
The pump release can be verified by checking that the pump motor vibrates.
If the pump motor does not vibrate, release the boiler from its lockout due to gas failure by pressing the reset button on the control panel and repeat the sequence a maximum of 10 times.
If the pump does not release, contact technical support.
Once the pump has been released, open the gas cock and check that the boiler operates correctly both in domestic hot water and heating modes.

7.13 Checking the condensate drain pipe

Check the soundness and integrity of the condensate drain pipe.
Verify the cleanness and correct filling of the condensate traps.

7.14 Instructing the user

Hand over this combined User & Installation manual and the Service manual to the end user and explain how to use the unit in both c.h. and d.h.w. modes.

Take the User step by step through the lighting instructions.
Show the User how to switch off the appliance quickly and indicate the position of the electric supply isolator.
Explain the proper use and adjustment of all system controls; this will ensure the greatest possible fuel economy.
Explain the function and use of the function selector.
Explain and demonstrate the function of time and temperature controls (if fitted).
Explain how to turn off the appliance for both short and long periods and advise on the precautions necessary to prevent damage should the appliance be inoperative when freezing conditions may occur.
Fill in the details required on the Boiler Guarantee Certificate and hand to the User advising them to return the correct section for boiler Guarantee registration.
Finally, advise the User that, for continued safe and efficient operation, the appliance must be serviced by a competent person at least once a year.

8 GAS CONVERSION

8.1 Warnings

The commissioning of this boiler and system must only be undertaken by Safety Registered Engineer,qualified to work on Liquefied Gas Petroleum Gas (LPG)

Components used to adapt it to the type of gas available must be genuine parts only.

8.2 Procedures

Check that the gas cock fitted under the boiler is turned off and the appliance is switched off at the mains isolating spur.

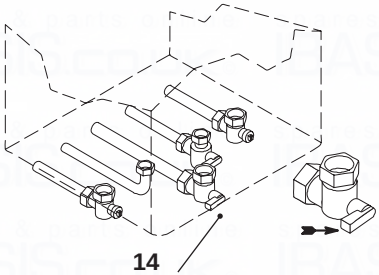

Closed position

Fig. 8.1

- Remove the front panel of the case (see the section *General access and emptying hydraulic circuits* in the service manual).
- Take off the lid of the sealed chamber.
- Take the front panel of the combustion chamber off and remove the burner (41on page 28). See section *Ignition and detection electrodes* in the service manual for detailed instructions.
- Carry out the conversion for the type of gas, replacing the burner injectors correctly.
- Re-assemble the burner, the front panel of the combustion chamber.
- Switch on the appliance at the mains isolating spur.
- Turn the boiler OFF positioning the function selector 8 as indicated in Fig. 8.2.

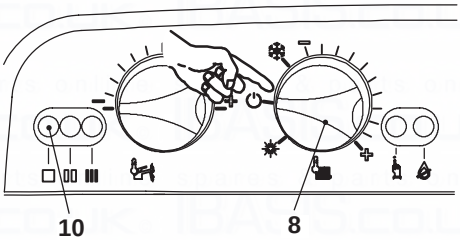

Fig. 8.2

- Disconnect the electrical connectors of the C.h. temperature probe NTC 23 in Fig. 8.3

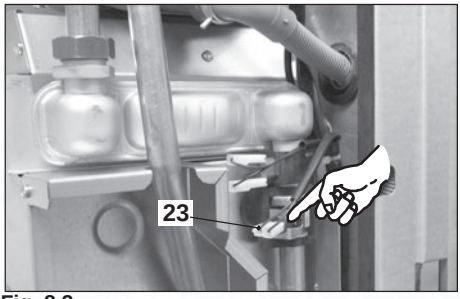

Fig. 8.3

- Keep pressed the reset button 7 for about 10 seconds until the lock-out signal lamp 6 blinks.
- Connect the electrical connectors of the C.h. temperature probe NTC 23 in Fig. 8.3.
- Press the reset button 7 repeatedly (4 times) until the lamps 10 give the indication as in Fig. 8.4 (gas type mode).

Fig. 8.4

At this step it is possible to visualize the cur-

MAINTENANCE

rent setting by keeping the reset button 7 pressed for more than 5 seconds. The lamps 10 will flash a number of times corresponding to the setting of the knob 9 in Fig. 8.5.

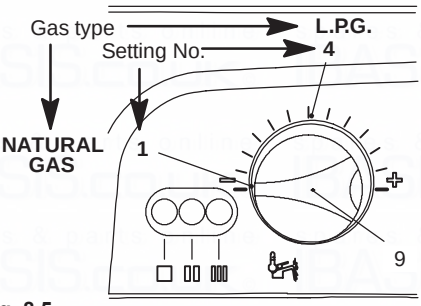

Fig. 8.5

Gas supply	Position of knob 9	Approx. Max current through the modulator device
Natural gas	1	125 mA
L.P.G.	4	165 mA

Fig. 8.6

- To change the setting turn the knob 9 on a position corresponding to the gas used as shown in Fig. 8.5. By turning the knob 9, the lock-out signal lamp 6 blinks quickly (2 per seconds) indicating that the setting has changed and must be memorised.
- To memorize the setting keep pressed the reset button 7 for about 5 seconds until the lamps 10 briefly blinks simultaneously.
- Open the gas cock (14 in Fig. 8.7).
- To reset the boiler to the normal operation turn it ON by the function selector 8 on the desired operation and checking the ignition pressure and that the burner lights up uniformly. In any case, the boiler automatically resets to its normal operation after 10 minutes.

Factory setting = Natural gas (as illustrated)

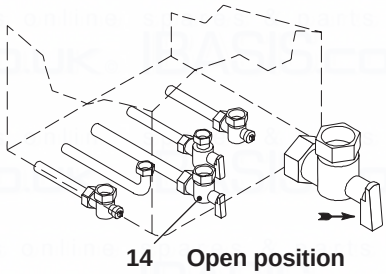

Fig. 8.7

- Calibrate the gas valve according to the instructions given in the service manual, section *Modulating gas valve-Adjustment*.
- Re-assemble the lid of the sealed chamber.
- Replace the self-adhesive label indicating the type of gas, and the gas pressures to which the appliance has been set with the label included with the conversion kit. The label is placed on the botton of the appliance.
- Replace the adjustment protection cap.
- Replace the front panels of the case.

9 MAINTENANCE

9.1 Warnings

The procedures detailed in this chapter **must be carried out only by a Gas Safety Registered Engineer.**
Thus you are advised to contact an Authorised Service Agent.
For Ireland (IE), the servicing work must be carried out by a competent Person.
For efficient and continuous operation of the boiler you are advised to have, at least once a year, maintenance and cleaning done by an Approved Service Engineer.
Isolate the appliance from the electricity supply by turning off the fused spur isolation switch adjacent to the appliance and turn off the gas cock, before carrying out any procedures, whatsoever, for cleaning, maintenance, opening or dismantling boiler panels.

9.2 Dismantling the external panels

Front panel

- Loosen the three screws A (Fig. 9.1).
- Lift and remove the panel.

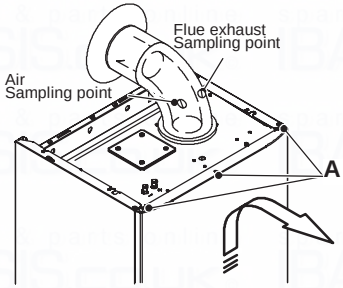

Fig. 9.1

Side panels

- Loosen the screws B. Bring the bottom of the panels away from the boiler and lift them, freeing them from the top hooks (Fig. 9.2).

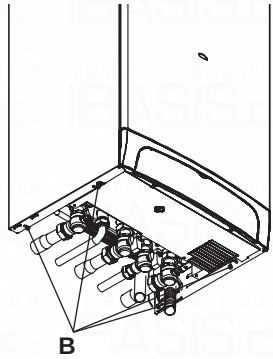

Fig. 9.2

9.3 Emptying the d.h.w. system

- Turn off the d.c.w .inlet isolating valve and turn on the hot water taps and any drain cocks.

9.4 Emptying the c.h. system

- Close the c.h. isolating valves.
- Open the central heating drain cock (25 in Fig. 9.3).

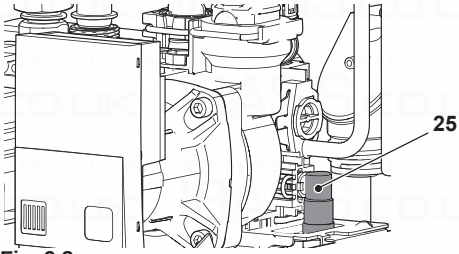

Fig. 9.3

- A small quantity of water will remain in the d.h.w. heat exchanger after draining. If the boiler is being drained to prevent freezing, the d.h.w. heat exchanger must be removed and inverted to drain fully or an antifreeze solution added.

9.5 Combustion analysis check

If it is necessary to carry out a combustion analysis remove the plugs indicated in Fig. 9.1.
Reference figures are given in the sections "Technical Data" on pag. 30 or pag. 34 (Flue gas figures).

9.6 Cleaning the primary heat exchanger

- Take off the front of the case.
- Take off the removable front of the sealed chamber and the front panel of the combustion chamber.

If you notice dirt on the fins of the primary heat exchanger (43on page 28):
- Cover the sloping surfaces of the burner (41on page 28) entirely in a protective layer (sheets of newspaper or similar).
- Brush out the primary heat exchanger (43on page 28) with a bristle paintbrush.

9.7 Checking the pressurisation in the expansion vessel

Empty the central heating systemas described in section "Emptying the c.h. system" to page 59 and check that the expansion vessel pressure is not less than 1 bar. See also section "Expansion vessel" to page 29.
If the pressure is lower, take steps to correct the pressure level

9.8 Cleaning the burner

The sloping and multi-gas type burner (41on page 28) does not need special maintenance, but it is sufficient to dust it with a bristle paintbrush.
To reach the burner:
- Take off the front of the case.
- Take off the removable front of the sealed chamber and the front panel of the combustion chamber.
- Brush out the burner with a bristle paintbrush.

9.9 Checking the flue

Have the integrity of the flue outlet pipe (49on page 28) air intake pipe (50on page 28), checked periodically, the air pressure sensor* (19on page 27) and the efficiency of the flue safety circuit checked at least once a year.
* For details see the section *Fan and air pressure sensor* in the service manual.
For all the above maintenance operations it is advisable to call an approved Service Engineer.

9.10 Drain pipe inspection

Check the soundness and integrity of the condensate drain pipe.
Verify the cleaness and correct filling of the condensate traps.

9.11 Visual inspection of appliance

Visually inspect all water joints, seals and connections for any evidence of leakage and retighten, grease or replace them as necessary.

9.12 Gas pressures and tightness

Check appliance for gas tightness. Recheck operational pressures and adjust as necessary as described in section "Checking the gas pressure at the burner" to page 54.

9.13 Water inhibitor concentration

Where chemical products are used the level of water treatment should be checked on an annual basis and re treated after full or partial drain down.

10 BENCHMARK COMMISSIONING AND SERVICING SECTION

It is a requirement that the boiler is installed and commissioned to the manufacturers instructions and the data fields on the commissioning checklist completed in full.

To instigate the boiler guarantee the boiler needs to be registered with the manufacturer within one month of the installation.

To maintain the boiler guarantee it is essential that the boiler is serviced annually by a Gas Safe registered engineer who has been trained on the boiler installed.
The service details should be recorded on the Benchmark Service Interval Record and left with the householder.

benchmark
COLLECTIVE MARK
THE MARK OF QUALITY FOR THE INSTALLATION, COMMISSIONING AND SERVICING OF DOMESTIC HEATING AND HOT WATER SYSTEMS

www.centralheating.co.uk

GAS BOILER SYSTEM COMMISSIONING CHECKLIST

This Commissioning Checklist is to be completed in full by the competent person who commissioned the boiler as a means of demonstrating compliance with the appropriate Building Regulations and then handed to the customer to keep for future reference.

Failure to install and commission according to the manufacturer's instructions and complete this Benchmark Commissioning Checklist will invalidate the warranty. This does not affect the customer's statutory rights.

Customer name:	Telephone number:
Address:	
Boiler make and model:	
Boiler serial number:	
Commissioned by (PRINT NAME):	Gas Safe register number:
Company name:	Telephone number:
Company address:	
	Commissioning date:
To be completed by the customer on receipt of a Building Regulations Compliance Certificate*	
Building Regulations Notification Number (if applicable):	

CONTROLS (tick the appropriate boxes)				
Time and temperature control to heating	Room thermostat and programmer/timer		Programmable room thermostat	
	Load/weather compensation		Optimum start control	
Time and temperature control to hot water	Cylinder thermostat and programmer/timer		Combination Boiler	
Heating zone valves	Fitted		Not required	
Hot water zone valves	Fitted		Not required	
Thermostatic radiator valves	Fitted		Not required	
Automatic bypass to system	Fitted		Not required	
Boiler interlock			Provided	

ALL SYSTEMS				
The system has been flushed and cleaned in accordance with BS7593 and boiler manufacturer's instructions			Yes	
What system cleaner was used?				
What inhibitor was used?		Quantity	litres	
Has a primary water system filter been installed?	Yes		No	

CENTRAL HEATING MODE measure and record:			
Gas rate	m^3/hr	**OR**	ft^3/hr
Burner operating pressure (if applicable)	mbar	**OR** Gas inlet pressure	mbar
Central heating flow temperature			°C
Central heating return temperature			°C

COMBINATION BOILERS ONLY				
Is the installation in a hard water area (above 200ppm)?	Yes		No	
If yes, and if required by the manufacturer, has a water scale reducer been fitted?	Yes		No	
What type of scale reducer has been fitted?				

DOMESTIC HOT WATER MODE Measure and Record:				
Gas rate	m^3/hr	**OR**	ft^3/hr	
Burner operating pressure (at maximum rate)	mbar	**OR** Gas inlet pressure at maximum rate	mbar	
Cold water inlet temperature				°C
Hot water has been checked at all outlets	Yes		Temperature	°C
Water flow rate				l/min

CONDENSING BOILERS ONLY		
The condensate drain has been installed in accordance with the manufacturer's instructions and/or BS5546/BS6798	Yes	

ALL INSTALLATIONS						
Record the following:	At max. rate:	CO	ppm	**AND**	CO/CO_2	Ratio
	At min. rate: (where possible)	CO	ppm	**AND**	CO/CO_2	Ratio
The heating and hot water system complies with the appropriate Building Regulations					Yes	
The boiler and associated products have been installed and commissioned in accordance with the manufacturer's instructions					Yes	
The operation of the boiler and system controls have been demonstrated to and understood by the customer					Yes	
The manufacturer's literature, including Benchmark Checklist and Service Record, has been explained and left with the customer					Yes	

Commissioning Engineer's Signature
Customer's Signature
(To confirm satisfactory demonstration and receipt of manufacturer's literature)

*All installations in England and Wales must be notified to Local Authority Building Control (LABC) either directly or through a Competent Persons Scheme. A Building Regulations Compliance Certificate will then be issued to the customer.

benchmark COLLECTIVE MARK
THE MARK OF QUALITY FOR THE INSTALLATION, COMMISSIONING AND SERVICING OF DOMESTIC HEATING AND HOT WATER SYSTEMS

© Heating and Hotwater Industry Council (HHIC)

SERVICE RECORD

It is recommended that your heating system is serviced regularly and that the appropriate Service Interval Record is completed.

Service Provider

Before completing the appropriate Service Record below, please ensure you have carried out the service as described in the manufacturer's instructions. Always use the manufacturer's specified spare part when replacing controls.

SERVICE 01				Date:
Engineer name:				
Company name:				
Telephone No:				
Gas safe register No:				
Record:	At max. rate:	CO ppm	**AND**	CO_2 %
	At min. rate: (Where Possible)	CO ppm	**AND**	CO_2 %
Comments:				
Signature				

SERVICE 02				Date:
Engineer name:				
Company name:				
Telephone No:				
Gas safe register No:				
Record:	At max. rate:	CO ppm	**AND**	CO_2 %
	At min. rate: (Where Possible)	CO ppm	**AND**	CO_2 %
Comments:				
Signature				

SERVICE 03				Date:
Engineer name:				
Company name:				
Telephone No:				
Gas safe register No:				
Record:	At max. rate:	CO ppm	**AND**	CO_2 %
	At min. rate: (Where Possible)	CO ppm	**AND**	CO_2 %
Comments:				
Signature				

SERVICE 04				Date:
Engineer name:				
Company name:				
Telephone No:				
Gas safe register No:				
Record:	At max. rate:	CO ppm	**AND**	CO_2 %
	At min. rate: (Where Possible)	CO ppm	**AND**	CO_2 %
Comments:				
Signature				

SERVICE 05				Date:
Engineer name:				
Company name:				
Telephone No:				
Gas safe register No:				
Record:	At max. rate:	CO ppm	**AND**	CO_2 %
	At min. rate: (Where Possible)	CO ppm	**AND**	CO_2 %
Comments:				
Signature				

SERVICE 06				Date:
Engineer name:				
Company name:				
Telephone No:				
Gas safe register No:				
Record:	At max. rate:	CO ppm	**AND**	CO_2 %
	At min. rate: (Where Possible)	CO ppm	**AND**	CO_2 %
Comments:				
Signature				

SERVICE 07				Date:
Engineer name:				
Company name:				
Telephone No:				
Gas safe register No:				
Record:	At max. rate:	CO ppm	**AND**	CO_2 %
	At min. rate: (Where Possible)	CO ppm	**AND**	CO_2 %
Comments:				
Signature				

SERVICE 08				Date:
Engineer name:				
Company name:				
Telephone No:				
Gas safe register No:				
Record:	At max. rate:	CO ppm	**AND**	CO_2 %
	At min. rate: (Where Possible)	CO ppm	**AND**	CO_2 %
Comments:				
Signature				

SERVICE 09				Date:
Engineer name:				
Company name:				
Telephone No:				
Gas safe register No:				
Record:	At max. rate:	CO ppm	**AND**	CO_2 %
	At min. rate: (Where Possible)	CO ppm	**AND**	CO_2 %
Comments:				
Signature				

SERVICE 10				Date:
Engineer name:				
Company name:				
Telephone No:				
Gas safe register No:				
Record:	At max. rate:	CO ppm	**AND**	CO_2 %
	At min. rate: (Where Possible)	CO ppm	**AND**	CO_2 %
Comments:				
Signature				

*All installations in England and Wales must be notified to Local Authority Building Control (LABC) either directly or through a Competent Persons Scheme. A Building Regulations Compliance Certificate will then be issued to the customer.

benchmark COLLECTIVE MARK
THE MARK OF QUALITY FOR THE INSTALLATION, COMMISSIONING AND SERVICING OF DOMESTIC HEATING AND HOT WATER SYSTEMS

© Heating and Hotwater Industry Council (HHIC)

17962.2513.0 0616 64A5 UK

Biasi UK Ltd
Commercial Road
Leamore Enterprise Park
WALSALL

WS2 7NQ

Sales Tel. 01922 714600
Tech. Service Tel. 01922 714636
www.biasi.co.uk

Available on the Android App Store

Available on the App Store