Installation and maintenance instructions

Oil and gas-fired special boilers

Logano G215 WS

For heating engineers

Please read carefully prior to installation and maintenance.

6 720 617 716 (10/2010) GB

Buderus

spares & parts online IBASIS.CO.UK

1 Safety . . . 4
1.1 About this manual . . . 4
1.2 Correct use . . . 4
1.3 Key to symbols . . . 4
1.4 Please observe these notes . . . 4
1.4.1 If you smell gas . . . 4
1.4.2 Installation tips . . . 5
1.4.3 Tips on the boiler room . . . 5
1.5 Tools, materials and accessories . . . 5
1.6 Disposal . . . 5

2 Product description . . . 6

3 Specifications . . . 7
3.1 Specifications for boiler without burner . . . 7
3.2 Declaration of conformity . . . 8
3.3 Operating conditions on Buderus G and GE cast iron boilers . . . 9
3.3.1 General operating conditions . . . 9
3.3.2 Conditions for the boiler room and ambient conditions . . . 10
3.3.3 Combustion air supply conditions . . . 11
3.3.4 Fuel conditions . . . 11
3.3.5 Mains power supply conditions . . . 11
3.3.6 Conditions for hydraulic system and water quality . . . 12

4 Scope of supply . . . 13

5 Transporting the boiler . . . 14

6 Positioning boiler . . . 15
6.1 Wall clearances . . . 15

7 Assembling the boiler block . . . 16
7.1 Assembly when delivered in separate sections . . . 17
7.1.1 Preparation of boiler sections . . . 17
7.1.2 Driving nipples home . . . 18
7.1.3 Preparing the central section . . . 18
7.1.4 Inserting the packing cord . . . 19
7.1.5 Knocking the central section into place . . . 19
7.1.6 Boiler section alignment . . . 20
7.1.7 Joining the boiler sections at the upper and lower boiler hubs using nipples . . . 20
7.1.8 Fitting the anchor rods . . . 23
7.1.9 Installing the feed pipe and connecting block . . . 23
7.1.10 Sealing the sensor well . . . 24
7.1.11 Positioning the flue outlet . . . 25
7.1.12 Closing the boiler hubs . . . 25
7.2 Checking for leaks . . . 26
7.2.1 Preparing for a leak test . . . 26
7.2.2 Leak test . . . 26
7.3 Installation when supplied as a pre-assembled block . . . 27
7.3.1 Sealing the sensor well . . . 27
7.4 Installation steps for boilers supplied in sections and as a pre-assembled block . . . 27
7.4.1 Fitting adjustable feet . . . 27
7.4.2 Inserting the hot gas baffle plates . . . 28
7.4.3 Installing the burner door . . . 28

7.4.4 Fitting the boiler shell . . . 29
7.5 Positioning and levelling boiler . . . 34

8 Boiler installation . . . 35
8.1 Flue gas connection . . . 35
8.1.1 Fitting the flue pipe sealing collar . . . 35
8.1.2 Fitting the flue gas temperature sensor (accessory) . . . 35
8.2 Making the water connections . . . 36
8.2.1 Connecting central heating flow and return . . . 36
8.2.2 Connecting the safety flow and return . . . 36
8.2.3 DHW cylinder connection . . . 36
8.2.4 Installing boiler fill and drain valve (accessory) . . . 37
8.3 Filling the heating system and checking for leaks . . . 37
8.4 Installing burner . . . 38
8.5 Providing a fuel supply . . . 38
8.6 Making the electrical connection . . . 39
8.6.1 Fitting the control device . . . 39
8.6.2 Installing the temperature sensor set and burner cable . . . 40
8.6.3 Mains power connection and connection of additional components . . . 40
8.6.4 Strain relief . . . 41
8.7 Installing casing parts . . . 41

9 Commissioning the heating system . . . 42
9.1 Creating operating pressure . . . 42
9.2 Making the heating system operational . . . 42
9.3 Commissioning the control device and the burner . . . 43
9.4 Raising the flue gas temperature . . . 43
9.4.1 Removing hot gas baffle plates . . . 44
9.4.2 Removing the hot gas check plate . . . 44
9.5 Checking the high limit safety cut-out (STB) . . . 44
9.6 Installing casing parts . . . 45
9.7 Commissioning report . . . 46

10 Shutting down the heating system . . . 47
10.1 Standard shutdown . . . 47
10.2 Emergency measures . . . 47

11 Heating system inspection and maintenance . . . 48
11.1 Why is regular maintenance important? . . . 48
11.2 Preparing the boiler for cleaning . . . 48
11.3 Cleaning the boiler . . . 49
11.3.1 Cleaning the boiler with cleaning brushes . . . 49
11.3.2 Wet cleaning (chemical cleaning) . . . 50
11.4 Checking the heating system operating pressure . . . 50
11.5 Inspection and maintenance reports . . . 52

12 Remedying faults . . . 55

13 Index . . . 56

1 Safety

1.1 About this manual

This manual contains important information for the safe and correct installation, commissioning and maintenance of this boiler.

In the following, the oil-/gas-fired special boiler Logano G215 WS will generally be described as the boiler.

These installation and maintenance instructions are designed for specialists, who, – through their vocational training and experience, – are knowledgeable in handling heating systems and gas installations.

1.2 Correct use

The boiler is designed for generating heating water and DHW, e.g. in detached homes or in apartment buildings.

Please observe the details on the type plate and the specifications (➔ Section 3, page 7), to ensure the correct use of this equipment.

1.3 Key to symbols

The following symbols are used in this manual:

WARNING!

RISK TO LIFE

Identifies possible risks, which may lead to serious injury or death if appropriate care is not taken.

CAUTION!

RISK OF INJURY/ SYSTEM DAMAGE

Identifies hazardous situations, which could lead to medium or slight injuries or to material losses.

CAUTION!

SYSTEM DAMAGE

Deviating from the stated operating conditions may lead to faults occurring. Major deviations may lead to the destruction of individual components or of the boiler.

- Observe the information on the boiler type plate, which is definitive. Always comply with this information.

USER NOTE

Tip for the optimum utilisation and setting of the control(s) plus other useful information.

➔ Cross-references

Cross-references to a specific point or another document are identified by an arrow ➔ .

1.4 Please observe these notes

Observe all local regulations and standards during installation and operation:

- Local building regulations relating to installation, combustion air supply and flue gas systems and connection to a chimney.
- Regulations relating to the electrical connection to the mains power supply.
- The technical rules of the gas supply company regarding the connection of a gas burner to the mains gas supply.
- Regulations and standards relating to heating system safety equipment.

USER NOTE

Only use original Buderus components. Losses caused by the use of parts not supplied by Buderus are excluded from the Buderus warranty.

1.4.1 If you smell gas

WARNING!

RISK TO LIFE

through the explosion of volatile gases. If you can smell gas, there is a risk of explosion.

- Extinguish all naked flames. Do not smoke. Do not use lighters.
- Prevent sparks.
  Do not operate electrical switches, including telephones, plugs or door-bells.
- Close the main gas shut-off valve.
- Open windows and doors.
- Warn all occupants, but do not use doorbells.
- Call your gas supplier from outside the building!
- If you hear gas escaping, immediately leave the building, prevent others from entering and notify the police and fire brigade from outside the building.

1.4.2 Installation tips

WARNING!

RISK TO LIFE

through the explosion of volatile gases.

- Work on gas-carrying parts may only be carried out by qualified and authorised personnel.

WARNING!

RISK TO LIFE

from electric shock.

- Only qualified electricians are permitted to carry out electrical work.
- Before you open the control device: Isolate all poles of the mains power supply and secure against unauthorised re-connection.
- Please observe all installation instructions.

1.4.3 Tips on the boiler room

WARNING!

RISK TO LIFE

from poisoning.
Insufficient ventilation can lead to dangerous flue gas leaks.

- Never block off or obstruct air ducts and vents or reduce their size.
- If an obstruction cannot be removed immediately, the boiler must not be operated.

WARNING!

RISK OF FIRE

from flammable materials or liquids.

- Never store flammable materials or liquids in the immediate proximity of the boiler.

1.5 Tools, materials and accessories

Standard tools, as used in central heating and gas and water systems, are required to install and maintain the boiler.

The following may also prove useful:

- Sack trolley with strap or Buderus boiler trolley
- Timber support
- Cleaning brushes and/or chemical cleaning agent for wet cleaning

If the boiler is delivered in sections, you will also require the following:

- Compression tool 1.2 if the boiler is supplied in sections (➔ Compression tool documentation)
- Flat board
- White spirit
- Installation kit (accessory)
- Bench hammer and wooden or rubber mallet
- Half round file
- Screwdriver (Philips and slotted head)
- Flat chisel
- Spanner SW 13, 19, 24, 36 and Allen key SW19
- Support wedge, flat iron
- Cleaning rags and cloth
- Fine emery cloth
- Wire brush
- 3-in-1 oil
- Spirit level, ruler, chalk, straight edge
- Flange with air vent valve (for pressure test)

1.6 Disposal

- Dispose of packaging in an environmentally responsible manner.
- Dispose of all heating system components that have to be replaced at an authorised disposal site.

2 Product description

This boiler is a low temperature boiler for oil or gas combustion with modulating boiler water temperature control.

The boiler comprises:

– Control device
– Boiler shell
– Boiler block with lagging

The control device monitors and controls all electrical boiler components.

The boiler shell prevents energy losses and acts as a silencer.

The boiler block transfers the heat generated by the burner to the heating water. The lagging prevents energy losses.

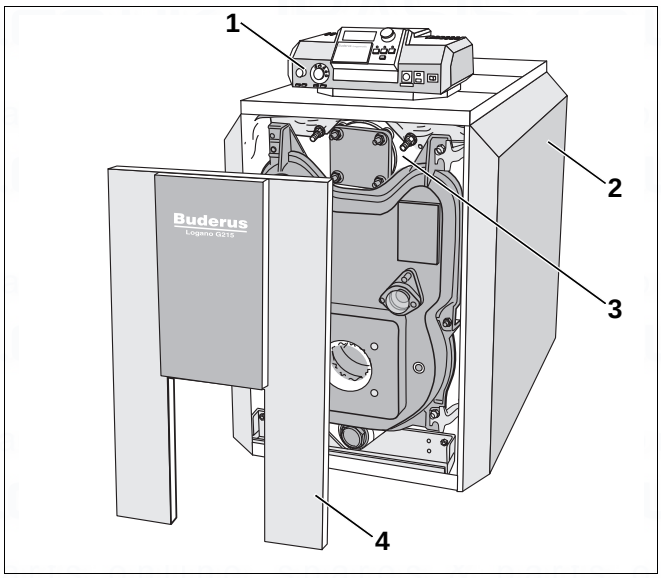

Fig. 1 Boiler without burner

1 Control device
2 Boiler shell
3 Boiler block with lagging
4 Burner door casing

Suitable burners

Fit a suitable oil or gas burner to the boiler. Observe the boiler specifications when selecting a burner (➔ Section 3.1, page 7).

CAUTION!

SYSTEM DAMAGE

through incorrect burner.

- Only use burners which meet the technical boiler requirements.

3 Specifications

3.1 Specifications for boiler without burner

Select a suitable burner for this boiler using the information in this section.

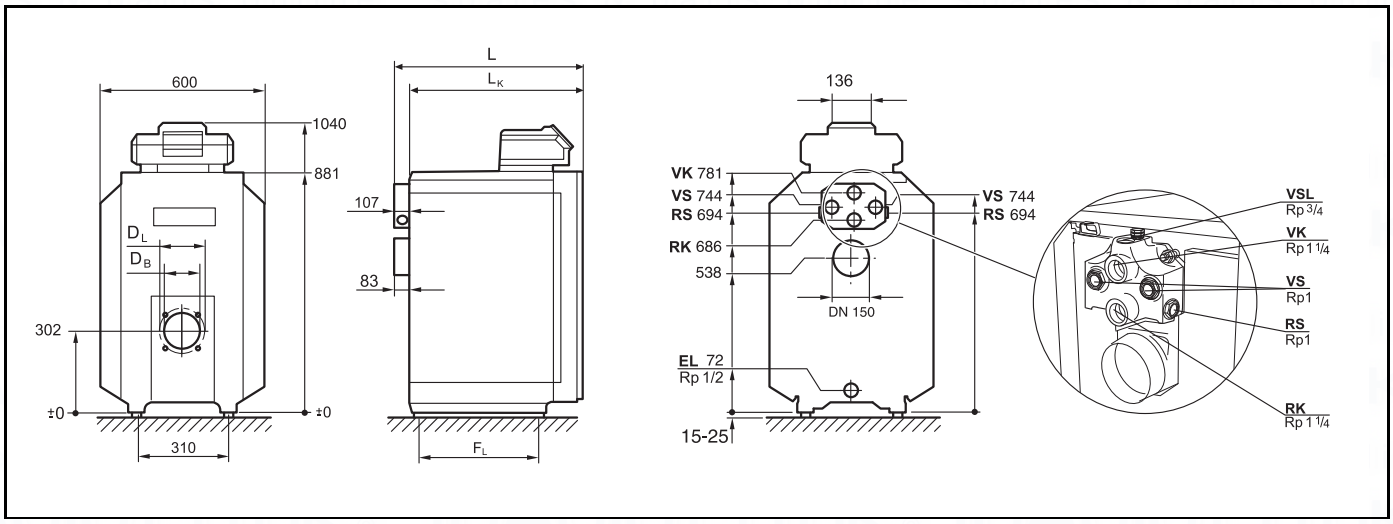

Fig. 2 Dimensions and connections (dimensions in mm)

Connections (for dimensions see the following tables):

VK = Boiler flow
RK = Boiler return
EL = Drain (connection for boiler fill and drain valve)
VS = DHW cylinder flow
RS = DHW return
VSL = Safety flow pipe (connection for an on-site air vent valve)

Boiler rating		52	64	78	95
Boiler sections	**Number**	4	5	6	7
Rated output	**kW**	40 – 52	48 – 64	59 – 78	71 – 95
Combustion output	**kW**	44,0 – 56,6	51,5 – 69,8	63,3 – 85,1	76,0 – 103,2
Boiler water content	**l**	approx. 61	approx. 73	approx. 85	approx. 97
Gas content	**l**	68,8	85,1	101,4	117,7
Flue gas temperature[1]	**°C**	160 – 198			
Flue gas mass flow, oil Partial load at 60 %	**kg/s**	–	–	0,021	0,026
Flue gas mass flow, oil Full load[2]	**kg/s**	0,018 – 0,024	0,022 – 0,030	0,027 – 0,036	0,032 – 0,044
CO_2 content, oil	**%**	13			
Flue gas mass flow rate, gas Partial load at 60 %	**kg/s**	–	–	0,021	0,026
Flue gas mass flow rate, gas Full load[3]	**kg/s**	0,018 – 0,024	0,022 – 0,030	0,027 – 0,36	0,032 – 0,044
CO_2contents, gas	**%**	10			
Required draught	**Pa**	0			

Tab. 1 Specification for boiler without burner

1 *Flue gas temperature acc. to EN303.*

2 *Full load details relate to the upper and lower rated output range.*

3 *Safety limit (high limit safety cut-out). Max. possible flow temperature = high limit (STB).*
Max. possible flow temperature = high limit (STB) – 18 K
Example: Safety limit (STB) = 100 °C, max. possible flow temperature = 100 – 18 = 82 °C.

Boiler rating		52	64	78	95
Hot gas resistance	**mbar**	0,30 – 0,42	0,16 – 0,35	0,25 – 0,46	0,35 – 0,71
Permissible flow temperature [3]	**°C**	120			
Permissible operating pressure	**bar**	4			
Maximum time constant of thermostat and high limit safety cut-out (STB)	**s**	40			

Tab. 1 Specification for boiler without burner

[1] *Flue gas temperature acc. to EN303.*

[2] *Full load details relate to the upper and lower rated output range.*

[3] *Safety limit (high limit safety cut-out). Max. possible flow temperature = high limit (STB).*
Max. possible flow temperature = high limit (STB) – 18 K
Example: Safety limit (STB) = 100 °C, max. possible flow temperature = 100 – 18 = 82 °C.

Boiler rating		52	64	78	95
Overall boiler length (L)	**mm**	787	907	1027	1147
Length of boiler block (L_K)	**mm**	680	800	920	1040
Transport dimensions of a single boiler section (width/height/depth)	**mm**	–		460/820/150	
Transport dimensions of boiler block (width/height/depth)	**mm**	460/820/ Länge L_K			
Length of combustion chamber	**mm**	548	668	788	908
Diameter of combustion chamber	**mm**	337			
Depth of burner door	**mm**	95			
Blast tube diameter (D_B)	**mm**	112	112	112	130
Circular hole diameter (D_L)	**mm**	150	150	150	170
Section feet clearance (F_L)	**mm**	455	575	695	815
Net weight [1]	**kg**	227	272	317	362

Tab. 2 Dimensions, weight and other information for boilers without burners

[1] *Weight incl. packaging approx. 6 - 8% higher.*

3.2 Declaration of conformity

The design and operation of this product conforms to European Directives and the supplementary national requirements. Its conformity is confirmed by the CE marking. You can view the Declaration of Conformity on the internet at www.buderus.de/konfo or request a copy from your local Buderus office.

3.3 Operating conditions on Buderus G and GE cast iron boilers

Thermostream technology is a unique feature of Buderus cast iron boilers. Return water is preheated and mixed within the boiler before it comes in contact with the heated surface of the combustion chamber. The Thermostream technology ensures there is an even temperature distribution in the boiler and avoids condensate forming within the combustion chamber. This reduces thermal stress, the main cause of failure of normal cast iron boilers. The benefit of this technology is that if the minimum boiler operating temperature of the boiler is maintained (see table below), there is no need for a conventional shunt pump to be installed, saving the cost of a pump, the electricity it consumes and the breakdown it can cause. The minimum boiler operating temperature as shown in the table below must be reached within 10 minutes and then be maintained while the burner is running.

3.3.1 General operating conditions

Boiler controls	Minimum flow rate through the boiler	Minimum return water temperature	Minimum boiler operating temperature for oil	Minimum boiler operating temperature for gas	Other conditions
Buderus 4000 with control over all heating circuits	none	none	50 degrees[1)]	50 degrees[1)]	when used with two stage burner, min load first stage 60%
Where the Buderus control is not controlling the heating circuits ie External control (BMS) or Constant temperature control with Buderus 4212 with ZM427	none	none	60 degrees[1)]	60 degrees[1)]	when used with two stage burner, min load first stage 60%

[1] *This temperature has to be reached within ten minutes of the burner starting and has to be maintained whilst the burner is firing.*

This operating condition can be easily achieved by the controls monitoring the boiler temperature and reducing the flow rate through the boiler until the required temperature is reached. This is then maintained by continuing to control flow based on the boiler temperature. The controls can reduce the flow rate by closing the valves on the mixed heating circuits or by modulating the boiler primary pumps or by closing the motorised butterfly valves or by having a motorised valve in the boiler return on a single boiler installation. The Buderus 4000 series controls can manage this process or it can be done by the BMS.

If it is not possible for the controls to regulate the flow sufficiently to meet this operating condition then a shunt pump circuit must be fitted to avoid the type of thermal stress that all boilers would experience in these conditions. This shunt pump circuit can be controlled either with a Buderus 4000 control or with a Buderus 4212 fitted with a ZM427 module. Failure to ensure that the operating condition is maintained may lead to thermal stress in the boiler and eventual failure of the sections which would be outside the scope of the warranty.

3.3.2 Conditions for the boiler room and ambient conditions

Operating conditions		Notes – detailed requirements
Temperature in the boiler room	+5 to +40 °C	
Relative humidity	max. 90 %	No dew formation or precipitation inside the boiler room
Dust/airborne seed	–	**Excessive dust inside the boiler room must be avoided when the boiler is operating, e.g.:** – Dust from building work **Combustion air supplied from outside must not be excessively loaded with dust or airborne seed; air filters should be fitted where required to prevent this:** – Air supply loaded with dust from dirt roads and paths. – Air supply loaded with dust from production and processing facilities, e.g. quarries, mines, etc. – Airborne seed from composite blossom
Halogenated hydrocarbon compounds	–	**The combustion air must be free from halogenated hydrocarbon compounds.** – Identify the source of halogenated hydrocarbon compounds and prevent their ingress. Where this is impossible, route combustion air from areas that are not contaminated by halogenated hydrocarbon compounds. **Observe the following:** – Buderus Catalogue - Heating Technology Germany – Code of Practice K3 in the Buderus catalogue
Fans which extract air from the boiler room.	–	During burner operation, no mechanical air handling equipment may be operated which could extract combustion air from the boiler room, e.g.: – Cooker hood – Dryer – Ventilation equipment
Small animals	–	Protect the boiler room and particularly the combustion air inlet against the ingress of small animals, for example by means of a grille.
Fire protection	–	Maintain clearances between the boiler and flammable materials in accordance with local regulations. Generally, maintain a minimum clearance of 40 cm. Never store flammable materials or liquids in the vicinity of the boiler.
Flooding	–	In case of an acute risk of flooding, disconnect the boiler in good time from its fuel and power supply before water enters the room. Any general and burner components or control equipment which comes into contact with water must be replaced before re-commissioning.

Tab. 3 Boiler room and ambient conditions

3.3.3 Combustion air supply conditions

Operating conditions	Boiler output (in case of several boilers = total output)	Air supply cross-section in cm^2 (unrestricted aperture)
Ventilation cross-section for combustion air from outside (split over a maximum of 2 apertures)	< 50 kW	min. 150 cm^2
	> 50 kW	min. 150 cm^2 plus an additional 2 cm^2 per kW, in excess of 50 kW

Tab. 4 Combustion air supply – Observe local requirements!

3.3.4 Fuel conditions

Operating conditions		Notes – detailed requirements
Permissible fuels for boilers without integral burners	–	This boiler can be operated with the following fuels. Select a burner which is suitable for one of these fuel types: – Fuel oil in accordance with the burner specification Reduce the maintenance/cleaning intervals, if fuel oil of a lesser quality (kinematic viscosity > 6 mm^2/s at 20 °C) is used. In this case, carry out maintenance and cleaning procedures at least twice annually. – Natural gas in accordance with the burner specification – LPG in accordance with the burner specification – Biogas, sewer gas, methane, waste ground gas in accordance with the following operating conditions
Contamination	–	Technically free of contaminants (for example dust, water vapour, liquid), i.e. constant operation will not lead to the accumulation of contaminants causing a reduction in the cross-section of valves, strainers and filters.
Biogases, Sewer gas, Pit gas, Methane	–	The following operating conditions must be met: – Constant boiler water temperature, min. 75 °C – Uninterrupted operation – Minimum return temperature above the dewpoint – in this case at least 60 °C, i. e. raising the return temperature – Regular cleaning and maintenance, possibly chemical cleaning with subsequent preservation

Tab. 5 Fuels

3.3.5 Mains power supply conditions

Operating conditions		Notes – detailed requirements
Mains power supply voltage	185 – 244 V	Observe the voltage range of the burner and control devices used. The housing/boiler must be earthed for functional and personal protection reasons.
Fuse	10 A	
Frequency	47,5 – 52,5 Hz	Sinusoidal voltage curve
Protection	–	IP40 (protection against touch and the ingress of foreign bodies> 1 mm Ø, not water protection)

Tab. 6 Mains power supply

3.3.6 Conditions for hydraulic system and water quality

Operating conditions		Notes – detailed requirements
Operating pressure (overpressure)	0,5 – 4,0 bar	
Permissible site test pressure	1,0 – 5,2 bar	
Protection against over-temperatures via TR thermostat	50 – 90 °C	
Protection against over-temperatures via STB high limit safety cut-out	100 – 120 °C	Some control devices adjustable on site from 100 to 120 °C.
Water quality	–	Only use drinking water to fill and top up the boiler. We recommend a pH value of 8.2 – 9.5.

Tab. 7 Hydraulic system and water quality

4 Scope of supply

- After delivery, check that all packaging is in perfect condition.
- Check that the delivery is complete.

Boiler as assembled block

Components	Piece	Packaging
Boiler block	1	1 pallet
Boiler casing	1	1 cardboard box
lagging	1	1 plastic packaging
Burner door casing, burner door and installation materials[1]	1	1 cardboard box
Control device		1 cardboard box
Technical documentation		1 plastic packaging

Tab. 9 Scope of supply

[1] *The adjustable feet are stored inside the packaging of the burner door casing.*

Boiler supplied in sections

Components	Piece	Packaging
Front, centre and rear sections	1	1 pallet
Fittings	1	1 cardboard box
Boiler casing	1	1 cardboard box
lagging	1	1 plastic packaging
Burner door casing, burner door and installation materials[1]	1	1 cardboard box
Control device	1	1 cardboard box
Technical documentation		1 plastic packaging

Tab. 10 Scope of supply

[1] *The adjustable feet are stored inside the packaging of the burner door casing.*

5 Transporting the boiler

This section details how you safely transport your boiler.

CAUTION!

SYSTEM DAMAGE

through impact.

- Please observe the handling instructions on the packaging to protect components susceptible to impact damage.

USER NOTE

- Protect connectors against dirt if the boiler is not immediately taken into use.

USER NOTE

Dispose of packaging in an environmentally responsible manner.

CAUTION!

RISK OF INJURY

through inadequate securing during transport.

- Use only suitable means for transportation, e.g. a sack trolley with strap, a stair or step trolley.
- Secure the load against falling.

6 Positioning boiler

This section details how to install and position the boiler inside the boiler room.

CAUTION!

SYSTEM DAMAGE

through frost.

- Install the boiler in a room where it is safe from the risk of freezing.

6.1 Wall clearances

Where possible install the boiler with the recommended wall clearances (➔ table). Reducing the minimum clearances makes the boiler more difficult to access.

The base or foundation, on which the boiler is to stand, must be perfectly flat and level.

The burner door can be fitted with the stop on the right or left.

Dimension	Wall clearance	
A	recommendation	1300
	minimum	1000
B	recommendation	700
	minimum	400
C	recommendation	400
	minimum	100
L_K	see "Specification" section	

Tab. 11 Recommended and minimum wall clearances (dimensions in mm)

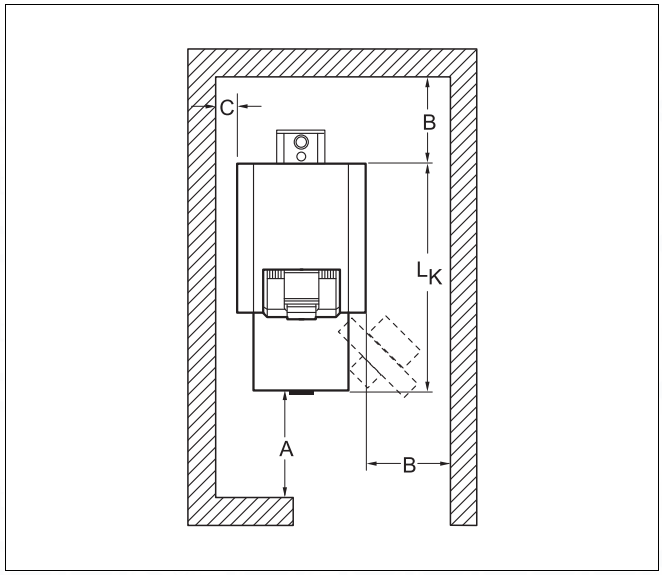

Fig. 3 Boiler room clearances (boiler positioned on the left-hand or right-hand side)

USER NOTE

Where applicable, allow extra wall clearances for additional components, for example DHW cylinder, pipe connections, flue gas silencer or other components on the flue gas side.

7 Assembling the boiler block

The on-site installation is carried out using individual sections if, because of physical limitations, a boiler block cannot be assembled as a complete unit.

For the further installation of pre-assembled boiler sections, see (➔ Section 7.3, page 27)

CAUTION!

RISK OF INJURY

through inadequate securing during transport.

- Use only suitable means for transportation, e.g. a sack trolley with strap, a stair or step trolley.
- Secure the load against falling.

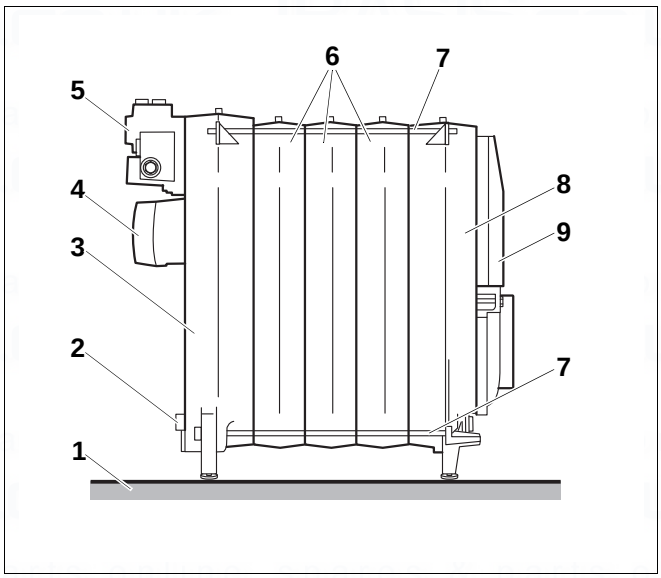

Fig. 4 Boiler block in the assembled state

1 Foundation/installation location
2 Drain
3 Rear section
4 flue outlet
5 connecting block
6 Central sections
7 Anchor rods
8 Front section
9 Burner door

7.1 Assembly when delivered in separate sections

- Assemble all boiler sections in accordance with the following instructions and diagrams.

7.1.1 Preparation of boiler sections

- Locate the rear section on two timber supports.
- Clean the boiler hubs with emery paper and a rag.
- Remove any burrs which might have been created with a file.
- Clean the packing spring or packing groove where required using a wire brush and rag.

CAUTION!

RISK TO HEALTH and RISK OF BURNING

through released vapours and easily flammable cleaning agents.

- During the use of red lead putty, adhesives and solvents ensure adequate ventilation inside the boiler room.
- When using solvents, avoid naked flames, incandescence and sparks.
- Please observe the manufacturer's handling and safety instructions.

- Clean the hub sealing faces with a rag soaked in white spirit.
- Evenly coat the boiler hub sealing faces with red lead putty.
- Coat the packing spring or packing groove with adhesive (adhesive base).

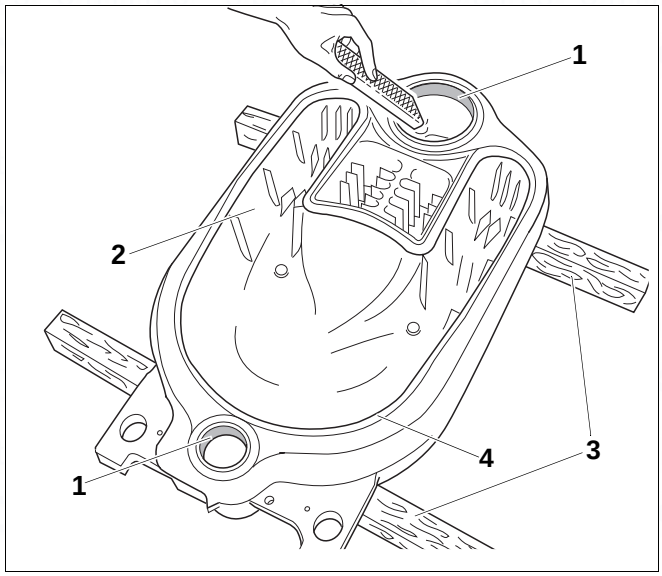

Fig. 5 Remove burr

1 Boiler hubs
2 Rear section
3 Timber supports
4 Sealing spring

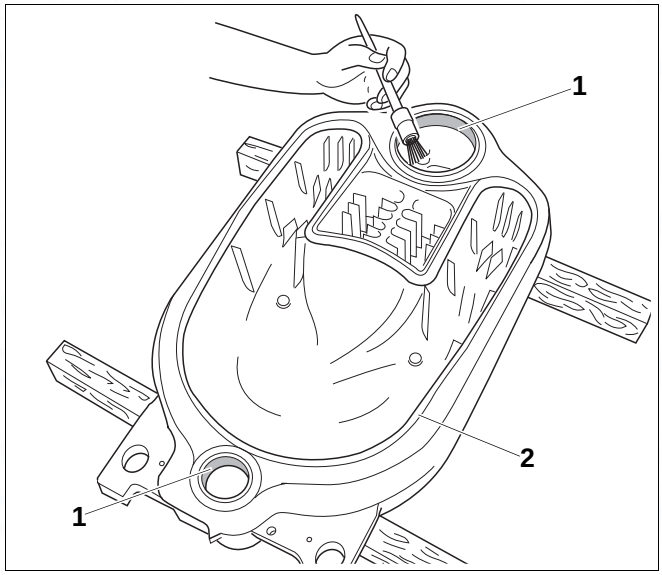

Fig. 6 Coating the boiler hubs with red lead putty

1 Boiler hub sealing face
2 Sealing spring

7.1.2 Driving nipples home

- Clean the nipples with a cloth soaked in white spirit.
- Evenly coat the nipples with red lead putty.
- Insert the nipples straight into the upper and lower hub of the rear section and hammer home securely with alternate heavy blows.

USER NOTE

- Afterwards, the nipples should protrude approx. 30 mm from the respective boiler hub.

- Remove any burrs which might have been created with a file.

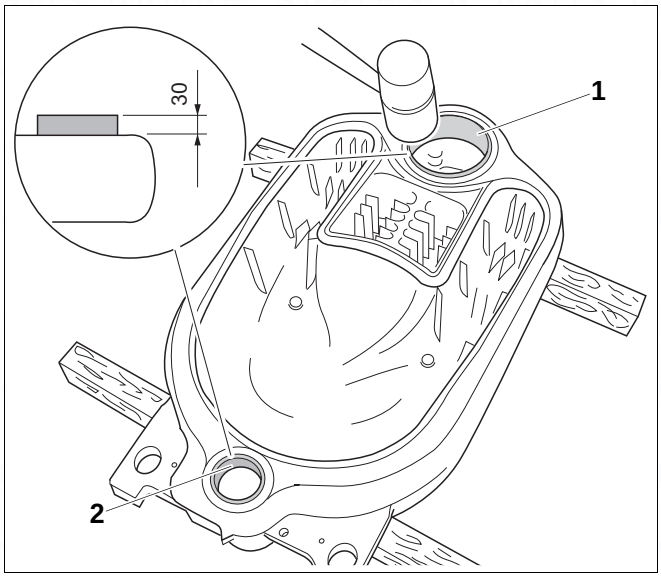

Fig. 7 Driving nipples home

1 Nipple in the upper boiler hub

2 Nipple in the lower boiler hub

7.1.3 Preparing the central section

Prepare the centre section the same way as the rear section (➔ Section 7.1.1, page 17).

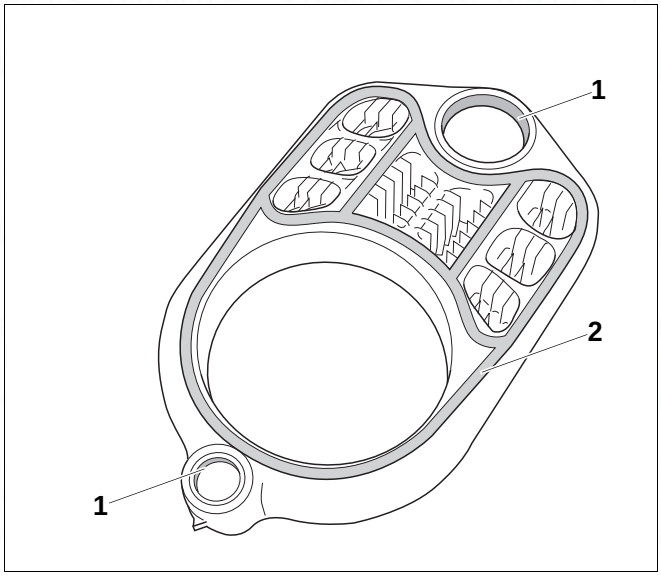

Fig. 8 Preparing the central section

1 Boiler hub sealing face

2 Packing grooves

7.1.4 Inserting the packing cord

- Unroll the required length of packing cord from the roll supplied.

CAUTION!

SYSTEM DAMAGE

through leaking boiler sections.

- Never stretch the packing cord during application to ensure that the faces between the boiler sections are sealed correctly.
- Carefully insert the packing cord into the boiler section packing grooves.

- Peel the backing paper off the packing cord, as you insert the cord into the packing groove.
- Insert the flexible packing cord into the packing groove, starting in the upper boiler hub area, and lightly press in.
- At the butt joints, overlap the packing cord by 2 cm and press firmly together.

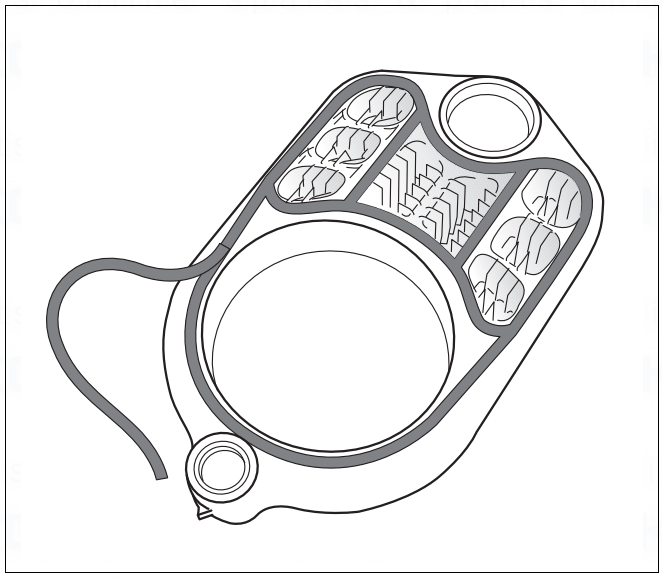

Fig. 9 Inserting the packing cord

7.1.5 Knocking the central section into place

- Turn the centre section around and locate with the upper and lower boiler hubs on the nipples of the rear section.
- Drive the centre section onto the rear section using a wooden or a rubber mallet.

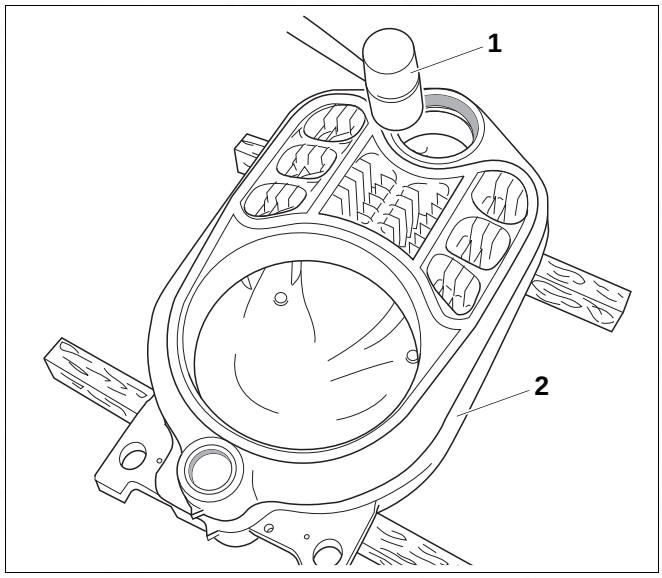

Fig. 10 Knocking the central section into place

1 Wooden or rubber mallet

2 Rear section

7.1.6 Boiler section alignment

CAUTION!

RISK OF INJURY

through inadequately secured boiler sections.

- Secure the boiler block section against tipping.

- Right the part assembled block comprising two boiler sections.
- Position a flat board underneath the centre section so that the boiler block is slightly tilted for the next stages of assembly.

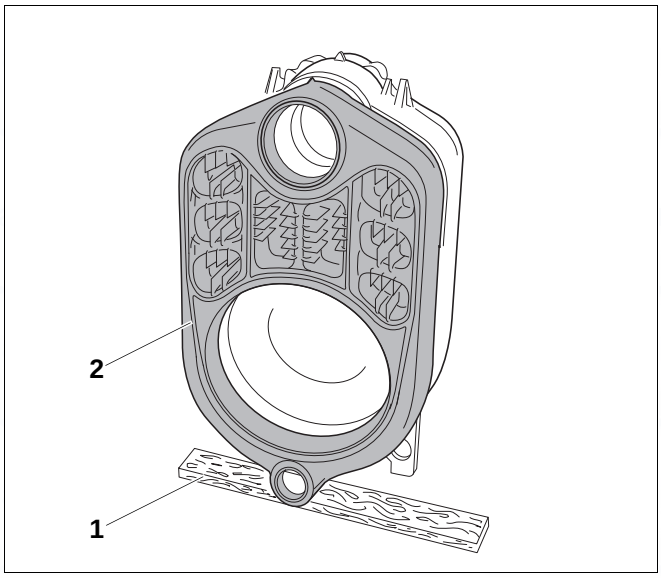

Fig. 11 Righting the part assembled block

1 Flat board
2 Centre section

7.1.7 Joining the boiler sections at the upper and lower boiler hubs using nipples

CAUTION!

BOILER DAMAGE

through an unsuitable compression tool.

- Use only the Buderus compression tool size 1.2.

CAUTION!

DAMAGE TO COMPRESSION TOOL

The compression tool may be damaged or destroyed if you compress pull rods with loose threaded connections.

- Check the threaded connection of the pull rods after every compression, and tighten, if required.
  The pull rod is correctly positioned if it is fully inserted and no thread is showing.
- Keep the thread of the compression tool clean. Dirty threads can damage the compression tool during compression.

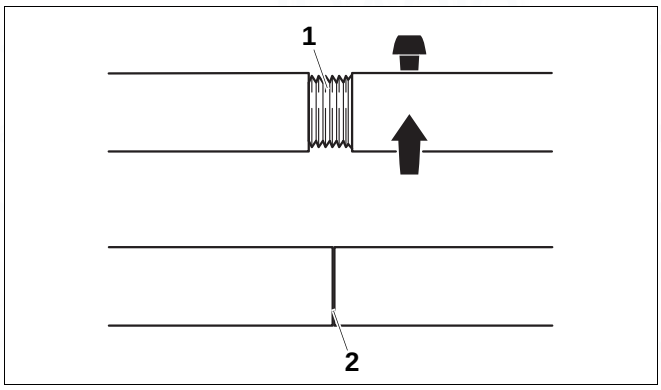

Fig. 12 Making the pull rod threaded connection

1 Pull rod threaded connection (incorrectly joined)
2 Pull rod threaded connection (correctly joined)

- Push one pull rod each through the lower and the upper boiler hub of the part assembled block.

CAUTION!

BOILER DAMAGE

through incorrectly positioned auxiliary flanges.

Leaks may occur, if the auxiliary flange sits on the packing spring/groove of the boiler section during the compression process.

- Ensure that the auxiliary flange lies level on the boiler hubs.

- Push the auxiliary flange onto the pull rods of the lower and upper boiler hubs.
- Push the mating flange onto the pull rod of the lower and upper boiler hubs, and secure with the appropriate wedges.
- Thread the compression units onto the pull rod threads.

USER NOTE

- Push the compression units onto the pull rod threads until two thread windings protrude from the compression units.

- Hold the pull rods in the middle of the boiler hubs and slightly draw together the compression tools using the compression unit.

- Place both ratchet spanners on the compression unit tightening nuts and draw the boiler sections together by evenly tightening the nuts.

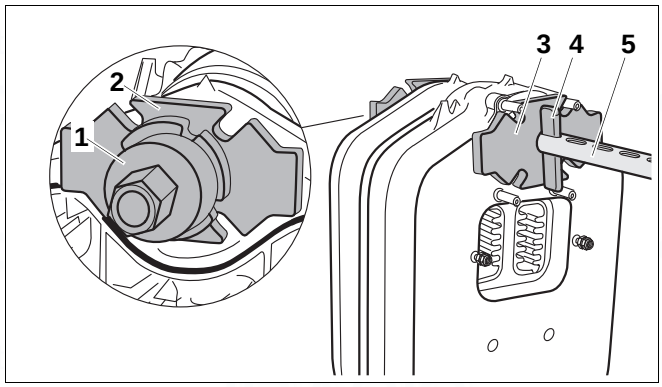

Fig. 13 Compression tool assembled at the upper boiler hub

1 Compression unit
2 Auxiliary flange (Ø 135 × 25 upper boiler hub)
3 Mating flange (Ø 135 × 25 upper boiler hub)
4 Wedge
5 Pull rod in the upper boiler hub

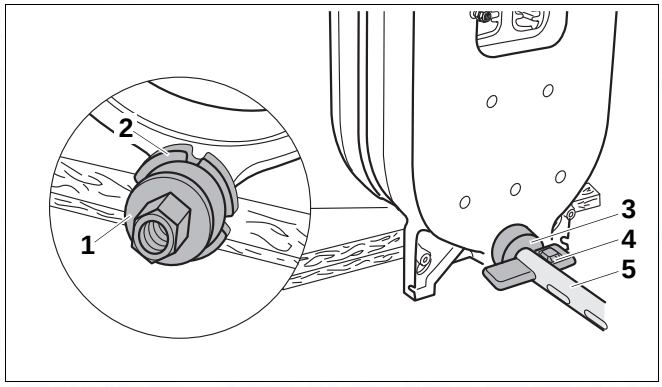

Fig. 14 Compression tool fitted to the lower boiler hub

1 Compression unit
2 Auxiliary flange (Ø 80 × 25, hidden behind the compression unit)
3 Mating flange (Ø 80 × 25 lower boiler hub)
4 Wedge
5 Pull rod in the lower boiler hub

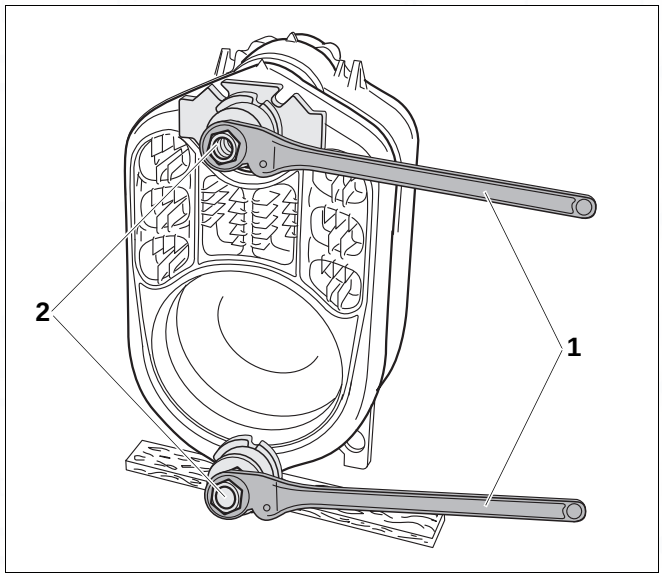

Fig. 15 Locating the ratchet

1 Ratchet
2 Tightening nut

CAUTION!

BOILER DAMAGE

through leaking boiler sections.

- Ensure that for each compression procedure, no more than one nipple joint (one nipple joint comprises two sections) is compressed.
- Never jam nipples into the boiler hubs of the boiler section.
- Stop pressing the sections together when the boiler hubs meet.

- Release and remove the compression tool.
- Hammer the nipples into the part assembled boiler block (➔ Section 7.1.2, page 18).
- Prepare all other centre sections as described above and then join using nipples.

Front section assembly

Due to the threaded studs, do not use the auxiliary flange at the front of the upper boiler hub when assembling the front section.

- Push the pull rod together with the compression unit through the upper boiler hub.
- Carry out all other steps as described (➔ Section 7.1.7, page 20).

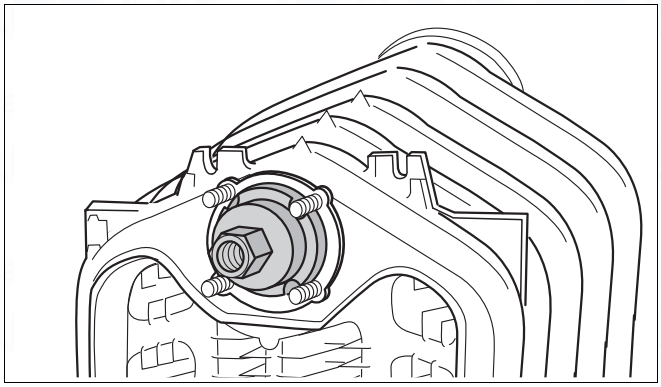

Fig. 16 Fit the compression tool to the front section

7.1.8 Fitting the anchor rods

USER NOTE

- Insert the anchor rod before removing the compression tool.
  Never remove the compression tool first.

SYSTEM DAMAGE

through incorrect spring washer assembly.

CAUTION!

- Ensure that the spring washers are arranged opposite each other on the anchor rods.

- Insert the anchor rods with spring washers into the cast lugs on the left-hand and right-hand side as well as adjacent to the lower boiler hubs.
- Tighten the nuts on the anchor rod threads by hand.
- Tighten the nuts 1 to 1½ turns on the anchor rods.
- Release and remove the compression tool.

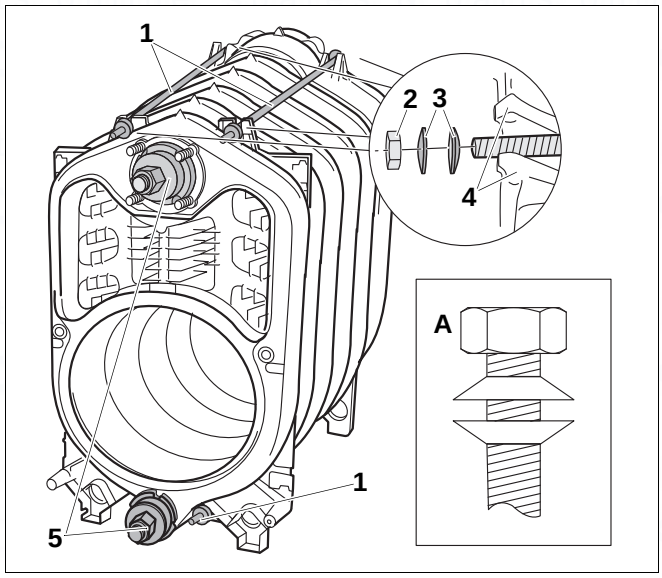

Fig. 17 Fitting the anchor rods –arrangement of the spring washers

1 Anchor rods
2 Nut
3 Spring washers
4 Cast lugs
5 Compression tool
A *Spring washer arrangement*

7.1.9 Installing the feed pipe and connecting block

The feed pipe, the connecting block and the sensor well are already assembled if the boiler block is supplied as a ready assembled unit.

USER NOTE

- If there is insufficient space behind the boiler, first push the feed pipe from the front of the boiler into the boiler before installing the connecting block (don't forget the boiler hub flat gasket).

- Secure the feed pipe to the connecting block using M 8 × 16 screw and the flat gasket.

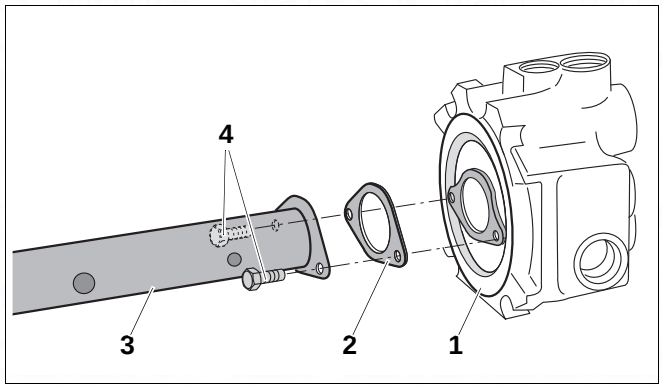

Fig. 18 Installing the feed pipe to the connecting block

1 Connecting block
2 Flat gasket
3 Feed pipe
4 M 8 × 16 bolts (brass)

- Take the nuts off the threaded studs.
- Push the flat gasket over the feed pipe.
- Push the feed pipe with the connecting block and flat gasket into the upper boiler hub at the rear of the boiler.

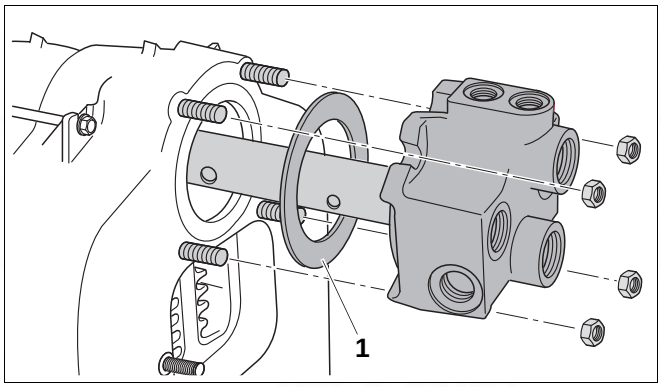

Fig. 19 Installing the feed pipe and connecting block

1 Flat gasket

- Locate the connecting block on the threaded studs, and tighten the four nuts by hand.
- Evenly tighten the connecting block nuts diagonally using a torque wrench (torque: maximum 60 Nm).

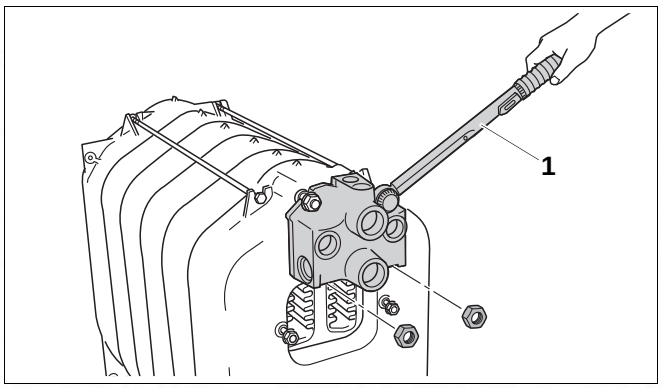

Fig. 20 Assembling the connecting block

1 Torque wrench

Seal connections that are not required using the plugs supplied. When the boiler is supplied as a pre-assembled block, these plugs will already have been fitted.

- Insert plugs with flat gaskets into the connections that are surplus to requirements.

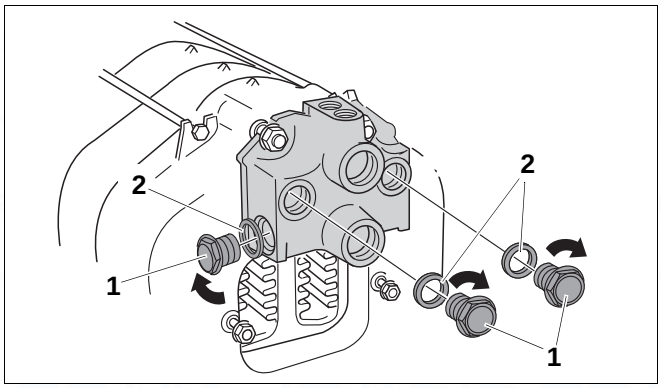

Fig. 21 Sealing connections that are surplus to requirements.

1 Plug

2 Flat gaskets

7.1.10 Sealing the sensor well

- Seal the sensor well R ¾ from the top into the Rp ¾ tapped hole of the connecting block test port.

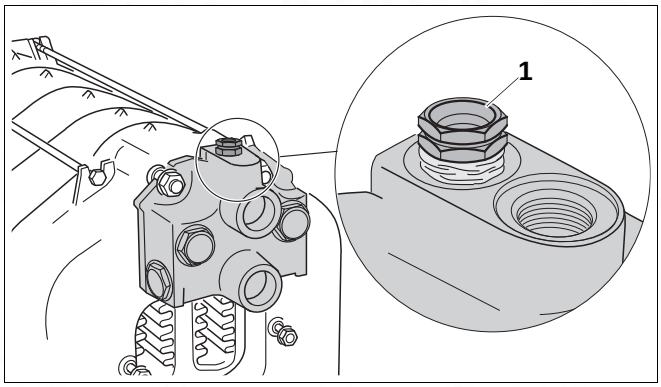

Fig. 22 Sealing the sensor well

1 Sensor well R ¾ (test port – Length: 110 mm)

7.1.11 Positioning the flue outlet

For this purpose, the flue outlet is equipped with packing cord.

- Remove the washers and nuts from the threaded studs.
- Position the flue outlet onto both threaded studs on the rear section and secure using nuts.

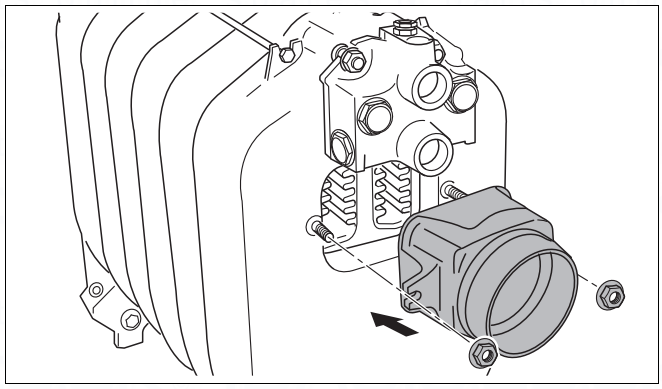

Fig. 23 Installing the flue outlet

7.1.12 Closing the boiler hubs

You will need the reducer, which is part of the standard delivery, to fit the on-site fill & drain valve (fill & drain valve).

- Seal the reducer into the lower boiler hub at the rear of the boiler.
- Fit the boiler fill & drain valve to the reducer.

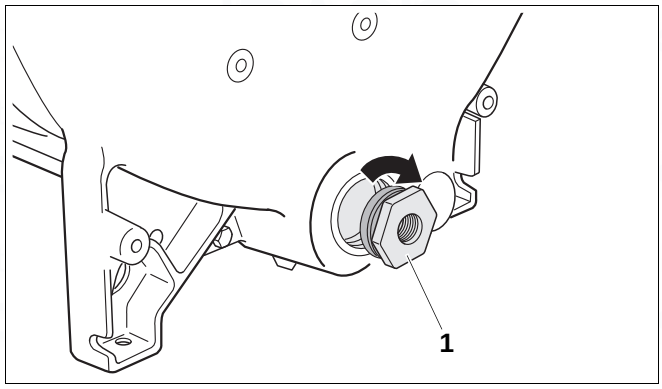

Fig. 24 Sealing in the reducer

1 Reducer (R 1½" to Rp ½")

- Close the upper boiler hub on the front section using the dummy flange.
- Insert the plug, together with its flat gasket, into the lower boiler hub.

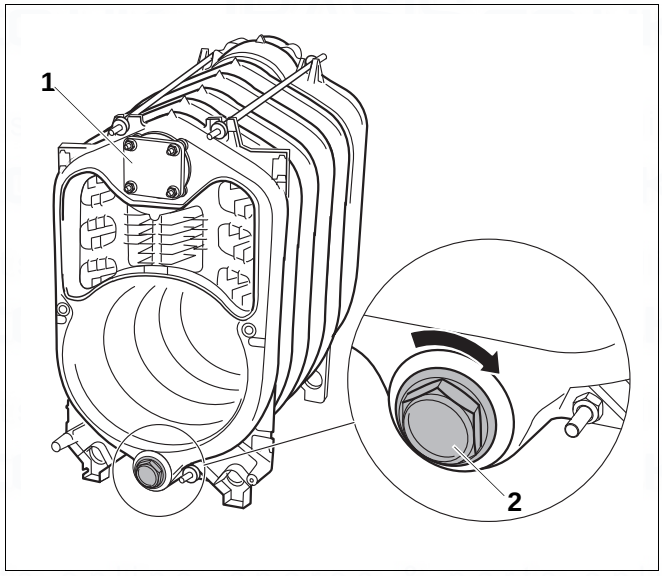

Fig. 25 Closing the boiler hubs on the front section

1 Dummy flange

2 Plug

7.2 Checking for leaks

Only carry out a boiler block leak test if the boiler was supplied in sections.

7.2.1 Preparing for a leak test

- Close all boiler hubs (➔ Section 7.1.12, page 25)
- Close the flow and return connections (fit the air vent valve to the connecting block Rp ¾ (➔ Fig. 22).

7.2.2 Leak test

Carry out a leak test at a test pressure of 5.8 bar (in accordance with the requirements of the European Pressure Vessel Directive).

USER NOTE

Please note the rating plate details.

Use a pressure gauge class 1.0 for the pressure test.

CAUTION!

SYSTEM DAMAGE

through overpressure.

- Ensure that no pressure, control or safety equipment is fitted.

- Slowly fill the boiler block via the boiler fill & drain valve. Bleed at the highest point of the system, until water flows out of the air vent valve.

Leaking hub joints

- If a hub joint is leaking, first drain the water through the fill & drain valve.
- Remove the water pipes.
- Remove the feed pipe.
- Release and remove the anchor rods.
- Separate the leaking boiler by driving flat wedges or chisels into the leaking part.

USER NOTE

- Clean the hubs before reassembly.
- Use new nipples and new packing cord when reassembling.
- Compress the boiler block again.
- Fit the anchor rods and feed pipe.
- Install the water pipework.
- Repeat the leak test.

For further assembly of the boiler, see (➔ Section 7.4, page 27).

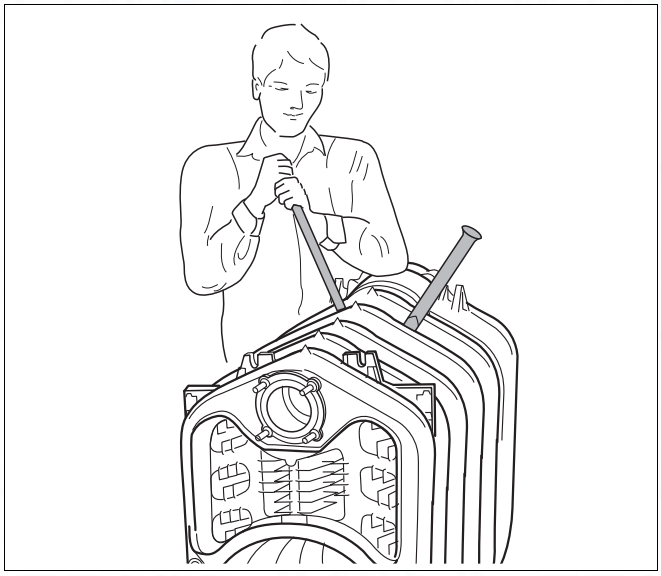

Fig. 26 Separate the boiler block

7.3 Installation when supplied as a pre-assembled block

Pre-assembled boiler blocks are leak tested in the factory prior to delivery.

- Cut through safety straps.
- Remove the pallet prior to positioning the boiler block.

WARNING!

RISK TO LIFE

from falling materials.

- Ensure a suitable means for bearing the load is available.
- Observe all locally applicable Health & Safety at Work regulations relating to lifting equipment.

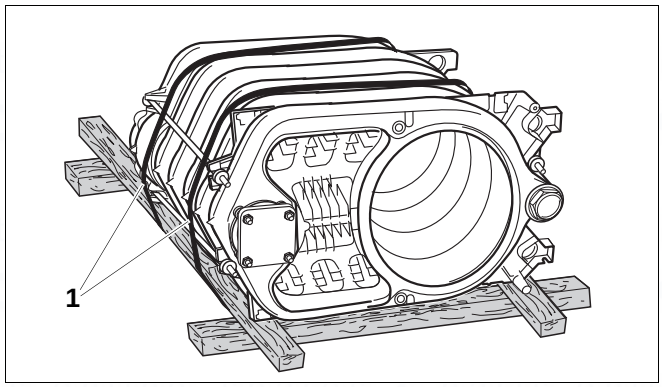

Fig. 27 Boiler block on pallet (as delivered)

1 Securing straps

7.3.1 Sealing the sensor well

- Sealthe sensor well R ¾ from the top into the Rp ¾ tapped hole of the connecting block test port.

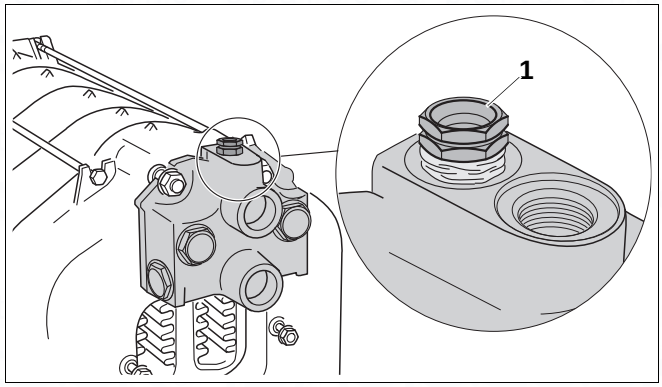

Fig. 28 Sealing the sensor well

1 Sensor well R ¾ (test port – Length: 110 mm)

7.4 Installation steps for boilers supplied in sections and as a pre-assembled block

Carry out the steps detailed in this section for deliveries in sections or as block. Any discrepancies in the installation procedure between the sectional and block delivery are highlighted below.

7.4.1 Fitting adjustable feet

Level the boiler, if necessary, using the adjustable feet (packaging ➔ standard delivery page 13) to prevent air pockets forming inside the boiler.

- Tip the boiler or support it on a timber support.
- Insert the adjustable feet 5 – 10 mm.
- Gently set the boiler down.

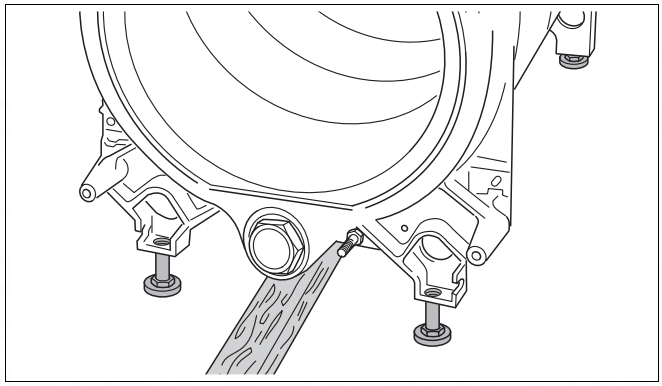

Fig. 29 Fitting adjustable feet

7.4.2 Inserting the hot gas baffle plates

- Remove the corrugated cardboard packaging when the block is supplied ready assembled.
- When the boiler is supplied in sections, remove the hot gas baffle plates from the cardboard box containing the fittings.
- Insert the hot gas baffle into the central second hot gas flue in accordance with the table below. The cast lugs should point towards the centre of the boiler.

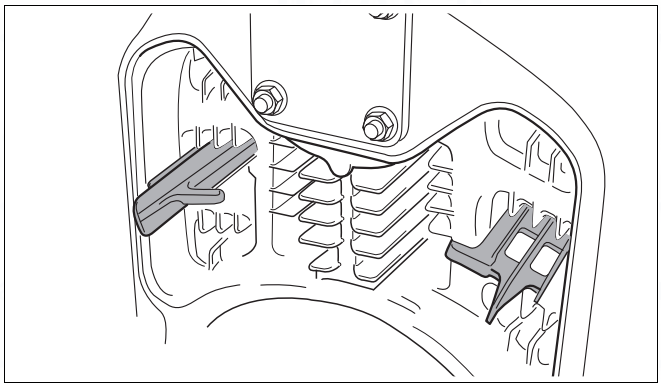

Fig. 30 Inserting the hot gas baffle into the second hot gas flue (here: centrally)

- Insert the hot gas baffle into the third hot gas flue in accordance with the table below. The cast lugs should point outwards.

Boiler rating		**52**	**64**	**78**	**95**
Boiler size incl. oil burner		**4**	**5**	**6**	**7**
2. hot gas flue	top	–	–	–	–
	centre	–	2	–	–
	bottom	–	2	–	–
3. hot gas flue		2	–	–	–

Tab. 12 Hot gas baffle plate arrangement

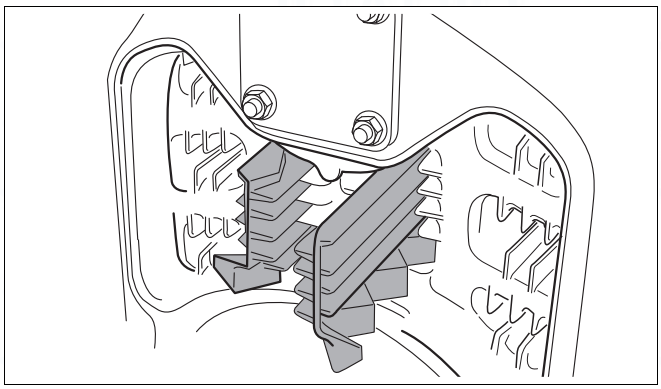

Fig. 31 Insert the hot gas baffle into the third hot gas flue

By removing the hot gas baffle, you can raise the flue gas temperature (➔ Section 9.4.1, page 44).

7.4.3 Installing the burner door

You can fit the burner door on the right-hand or on the left-hand side. In the following points, assembly on the right-hand side is described.

- Secure the two hinge pins to the front section using one M12 × 35 hexagon bolt for each.

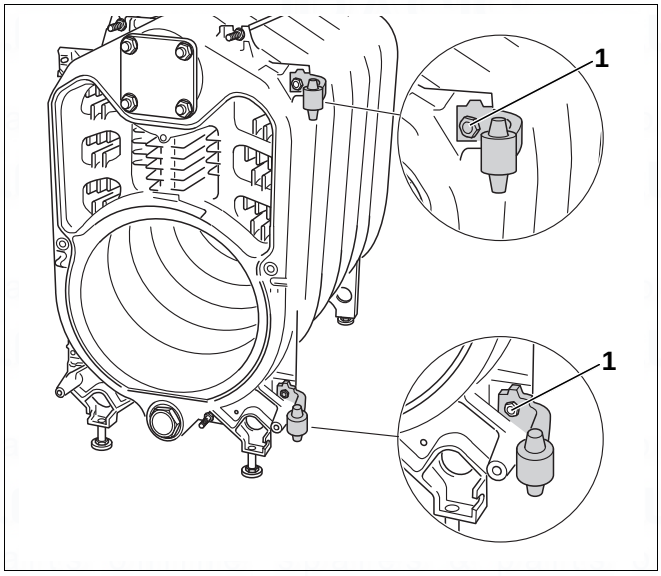

Fig. 32 Fitting the hinge pins (here: on the right-hand side)

1 M12 × 35 hexagon bolt

- Secure the two slotted hinge lobes to the burner door using one M12 × 25 hexagon bolt for each.
- Attach the burner door to the hinge pins using the hinge lobes.
- Close the burner door.

CAUTION!

SYSTEM DAMAGE

through leaking burner door.

- Tighten the hexagon bolts of the burner door evenly.

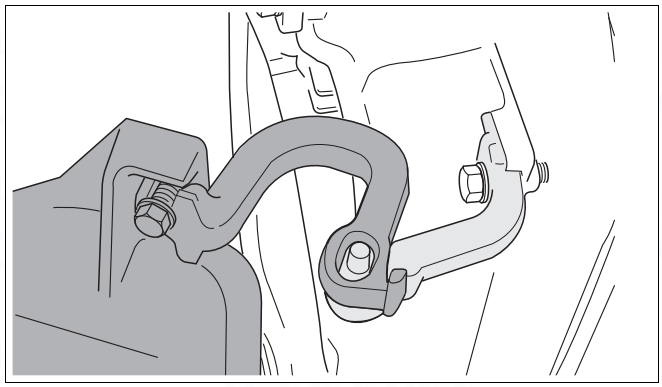

Fig. 33 Attaching the burner door (here: on the right-hand side)

1 M12 × 25 hexagon bolt

7.4.4 Fitting the boiler shell

Installing the boiler rear panel

- Insert the spacer pins into the rear section.

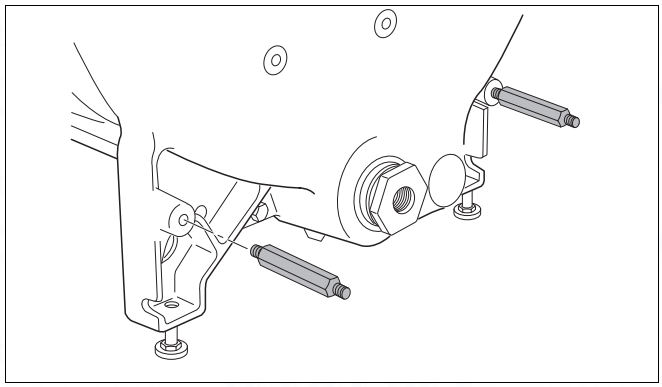

Fig. 34 Spacer pin installation

- Tighten the rear boiler panel using nuts on the threaded pins and spacer pins.

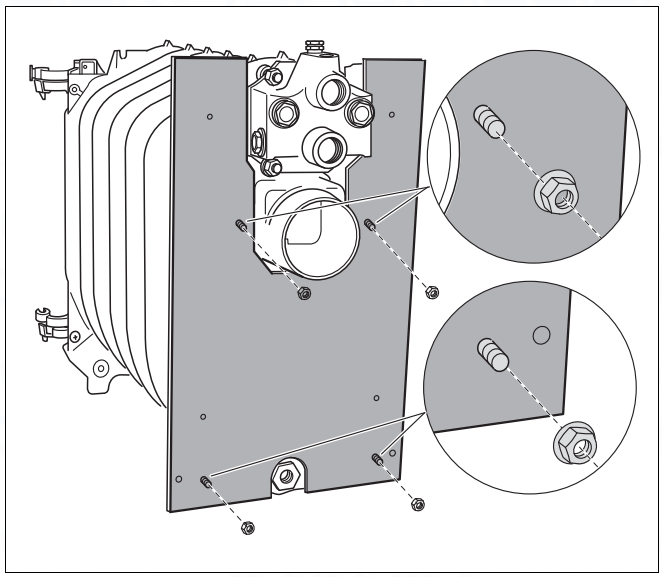

Fig. 35 Installing the boiler rear panel

Installing the upper tie-bar

- Secure the upper cross bar using the nuts provided on the threaded anchor rods.

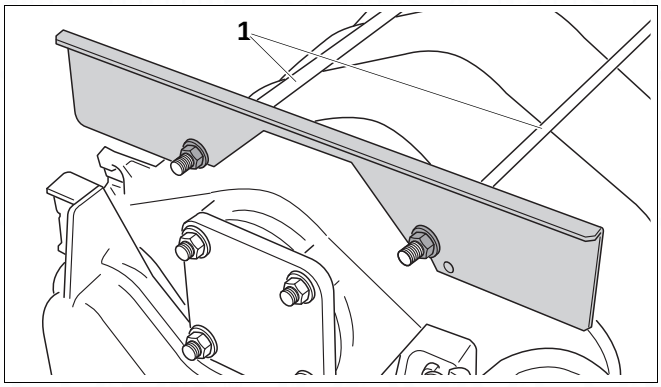

Fig. 36 Fitting the upper cross bar

1 Anchor rods

Installing the lower tie-bar

- Secure the lower tie-bar to the front section using hexagon bolts.

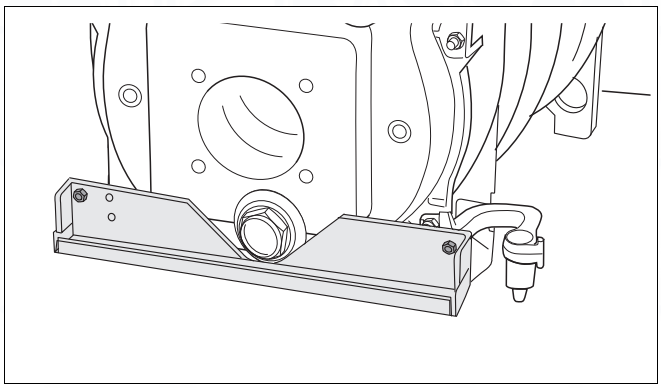

Fig. 37 Fitting the lower cross bar

Installing lagging

- Place the lagging over the boiler block.
- Push the lagging under the boiler block, in the direction of the arrow.
- Position the lagging tabs in front of the upper tie-bar and draw together with a spring clip.

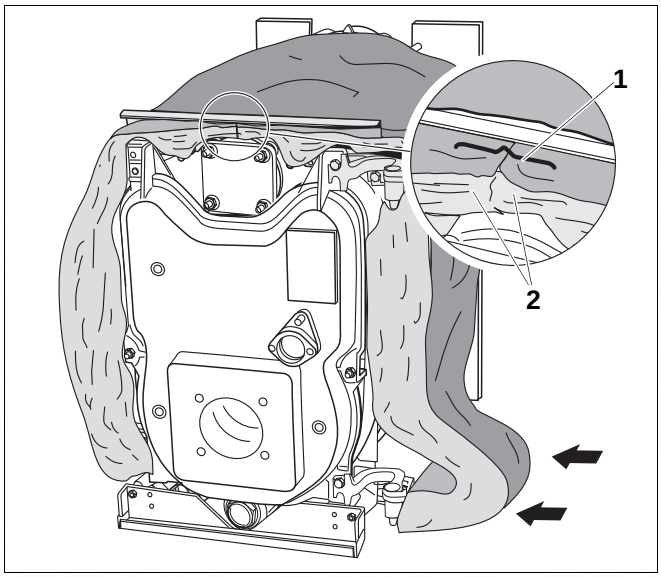

Fig. 38 Installing lagging

1 Spring clip

2 Lagging tabs

Installing the strain relief and the burner cable

CAUTION!

SYSTEM DAMAGE

through incorrectly routed burner cable.

- Route the burner cable on the hinge side.
- Allow for sufficient burner cable length between the burner and the strain relief, to enable the burner door to be fully opened and shut.

- Push the strain relief into the holes of the lower tie-bar.
- Lay the burner cable on the thermal insulation.
- Insert the burner cable into the strain relief.
- Secure the burner cable via the strain relief using two self-tapping screws.

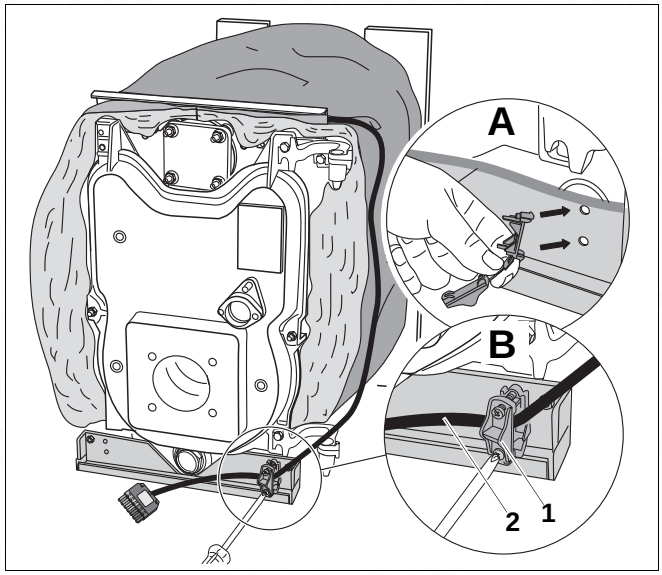

Fig. 39 Installing the strain relief and the burner cable

1 Strain relief

2 Burner cable

A *Push the strain relief into the holes of the lower tie-bar.*

B *Insert and secure the burner cable.*

Installing the side panels

Installation of the side panel on the left-hand and right-hand side is identical (this example: right-hand side panel).

- Push the snap nut onto the angled sheet steel of the side panel until it locks into the hole provided.

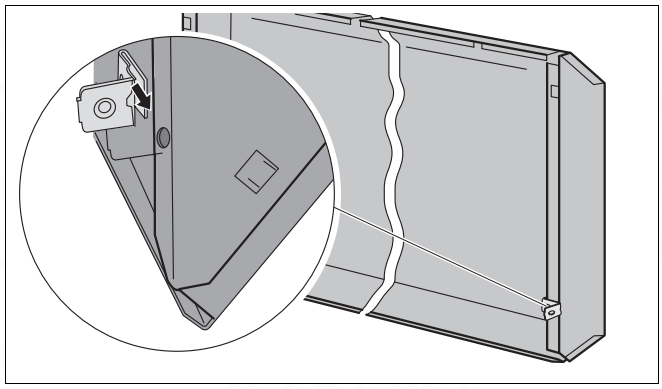

Fig. 40 Inserting the snap nut (here: right-hand side panel)

- Push the side panel into the angled part of the lower tie-bar.

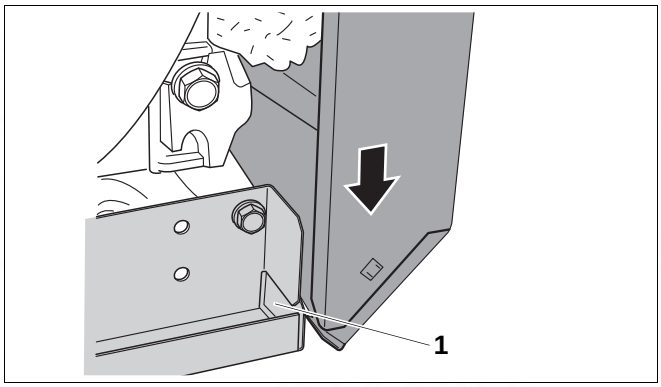

Fig. 41 Push in the bottom front corner of the side panel

1 Angled part of the lower tie-bar

- Slightly lift the side panel.
- Slot the side panel upper cutout into the upper tie-bar.
- Slot the rear part of the side panel onto the extended hook.

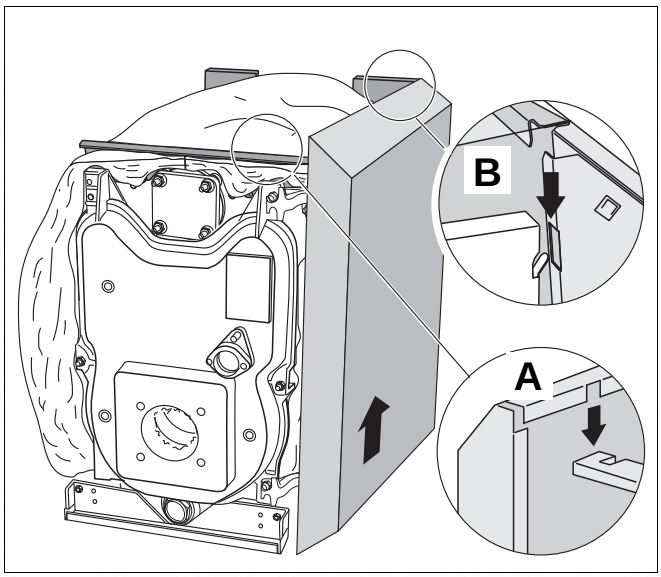

Fig. 42 Slot side panel into place

A *Upper tie-bar*

B *Extended hook*

- Push against the lower end of the side panel and secure to the rear panel using the snap nut.

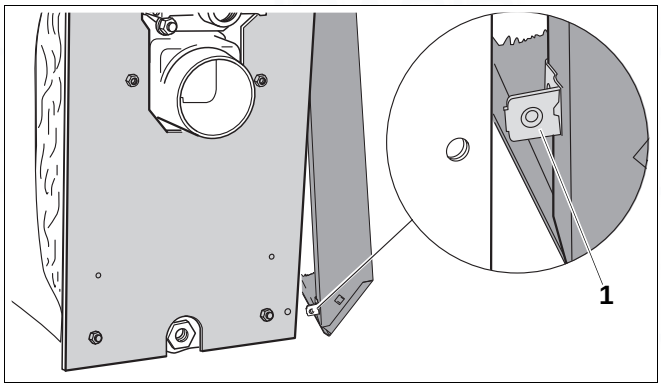

Fig. 43 Fasten the side panel to the rear panel with screws

1 Snap nut

Installing the front boiler cover

- Slot the front boiler cover with its cutout onto the upper tie-bar and push back.
- Secure the front boiler cover to the side panels using two self-tapping screws.

USER NOTE

Installing the rear boiler cover
(➔ Section 8.7, page 41).

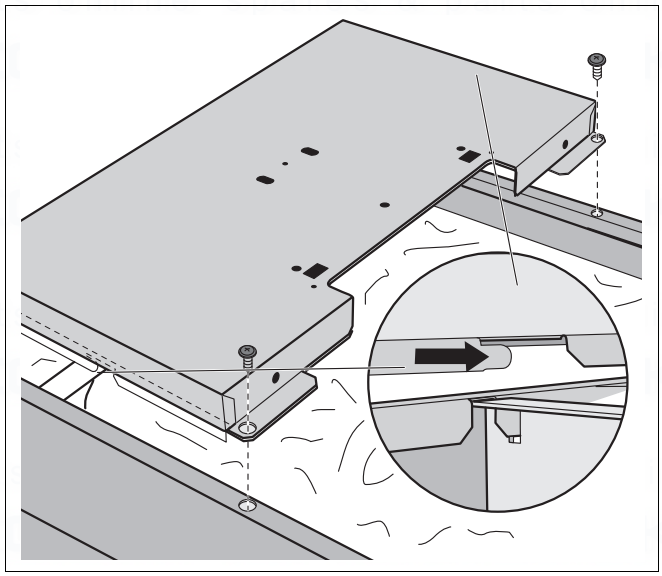

Fig. 44 Installing the front boiler cover

Installing the cable entry

- Secure the cable entry to the hole in the boiler rear panel.

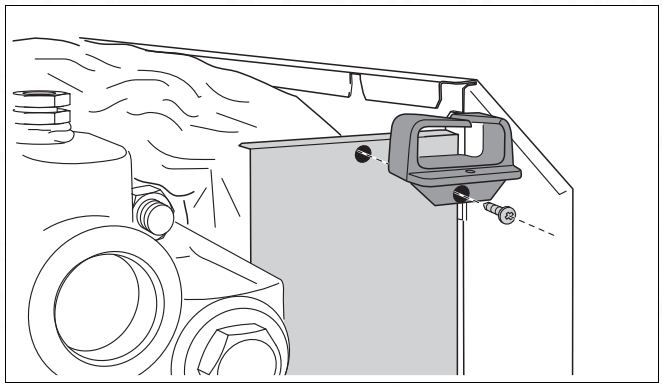

Fig. 45 Installing the cable entry

Insulating the connecting block

- Cut out the connecting block insulating shells at the indicated and required positions.

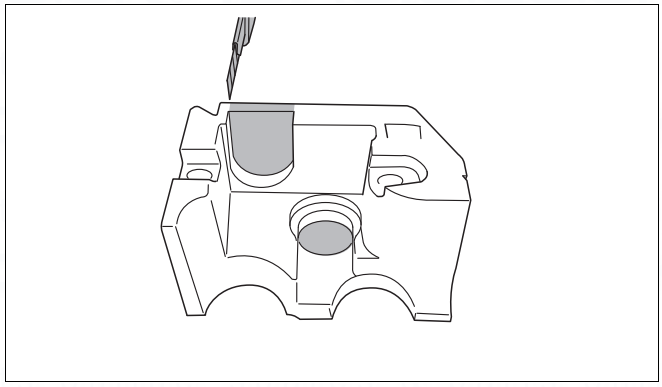

Fig. 46 Cutting out the insulating shells

- Push both insulating shells onto the connecting block.

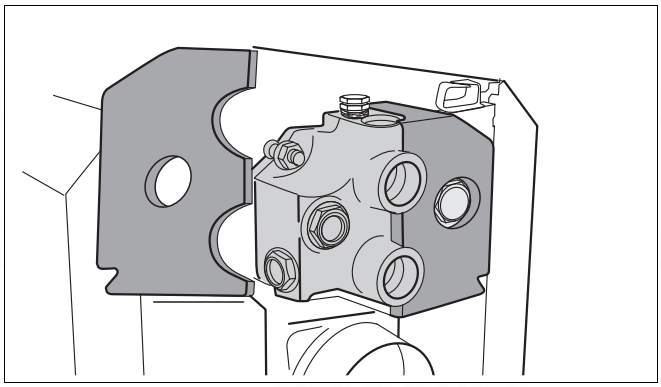

Fig. 47 Insulating the connecting block

- Push the radiation protection onto the insulating shells.

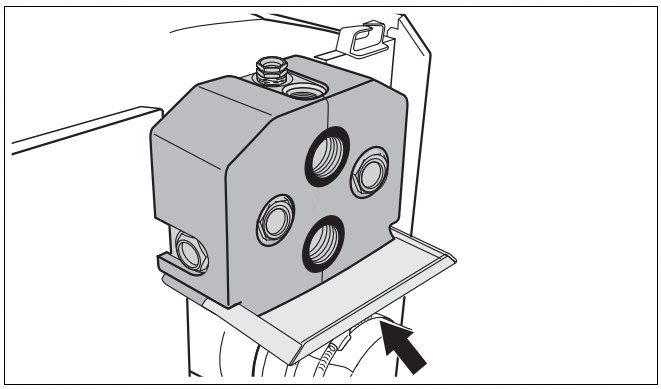

Fig. 48 Installing the radiation protection

7.5 Positioning and levelling boiler

- Position the boiler in its final location.
- Level the boiler horizontally by turning the adjustable feet and using a spirit level.

USER NOTE

- Protect connectors against dirt if the boiler is not immediately taken into use.

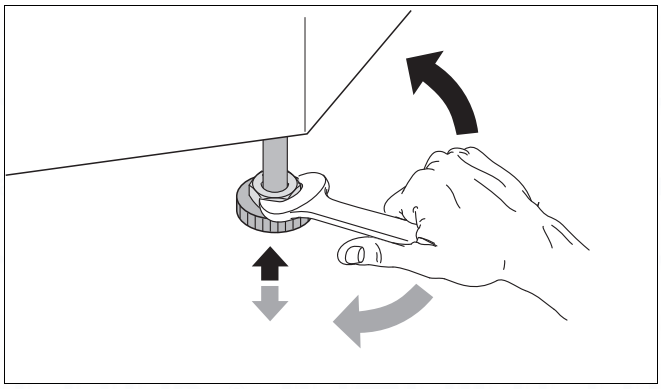

Fig. 49 Levelling the boiler horizontally

8 Boiler installation

This section details how to install your boiler correctly.
These details include:

- Flue gas connection
- Water connections
- Electrical connection
- Burner installation (if not fitted at the factory)
- Fuel connection

8.1 Flue gas connection

In different countries, different requirements apply to the flue gas connection.

- Create the flue gas connection in accordance with the requirements applicable in your country.

8.1.1 Fitting the flue pipe sealing collar

We recommend that a flue pipe sealing collar (accessory) is used to ensure the best seal.

- Push the jubilee clips over the flue pipe.
- Push the flue pipe as far as possible onto the flue outlet.
- Place the flue pipe sealing collar around the flue pipe–flue outlet joint so that it overlaps on top.
- Pull a jubilee clip onto the flue outlet and a second clip onto the flue pipe.
- Tighten the jubilee clips so that the flue pipe sealing collar fits smooth and snug.

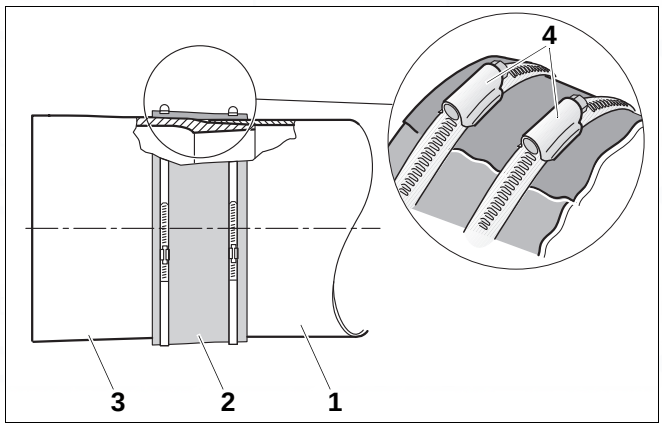

Fig. 50 Installing the flue pipe sealing collar (schematic)

1 Flue pipe
2 flue pipe sealing collar
3 Boiler flue outlet
4 Jubilee clips

8.1.2 Fitting the flue gas temperature sensor (accessory)

- Weld the connector into the flue pipe at a distance of 2 × flue pipe diameter (2 × ØA) from the flue outlet.
- Fit the flue gas temperature sensor (➔ flue gas temperature sensor documentation).

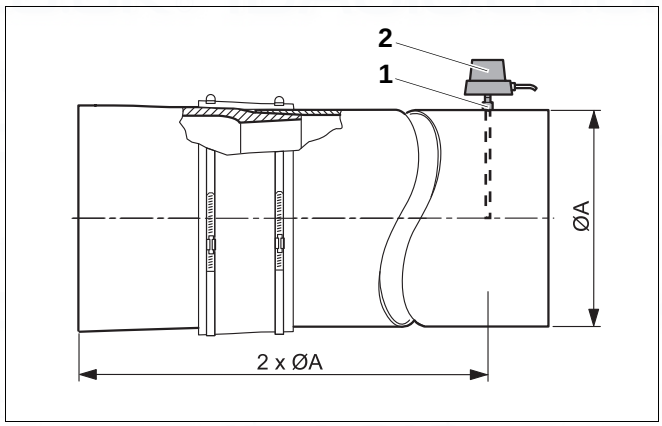

Fig. 51 Fitting the flue gas temperature sensor (schematic)

1 Coupling
2 Flue gas temperature sensor

8.2 Making the water connections

CAUTION!

SYSTEM DAMAGE

through leaking connections.

- Connect the pipes without stress to the boiler connections.

8.2.1 Connecting central heating flow and return

USER NOTE

We recommend the on-site installation of a dirt trap (accessory) into the central heating return to prevent contamination on the water side.

- Connect the central heating return to connector RK.
- Connect the central heating flow to connector VK.

VSL: Flow safety line
VK: Boiler flow
RK: Boiler return
VS: DHW cylinder flow
RS: DHW cylinder return
EL: Drain

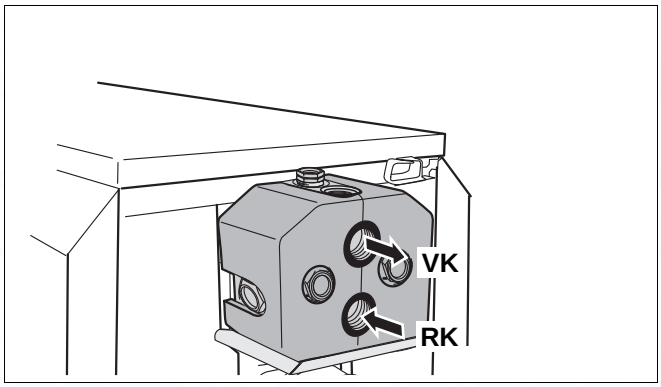

Fig. 52 Connecting the heating flow and return

8.2.2 Connecting the safety flow and return

We recommend the connection of a boiler safety set (accessory) or an air-vent valve (accessory) to connector VSL.

CAUTION!

SYSTEM DAMAGE

through the connection of incorrect components to connector VSL.

- Never connect a summer line, DHW cylinder or another heating circuit to VSL.

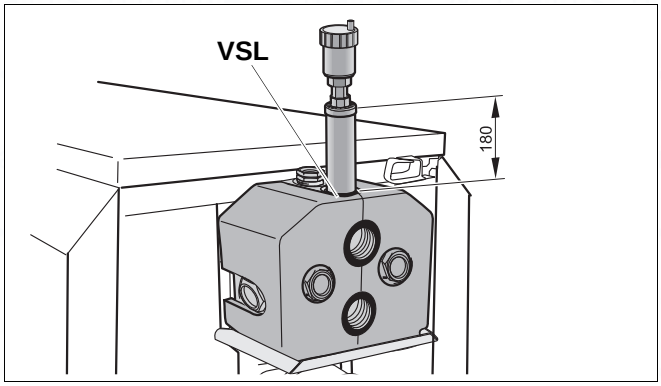

Fig. 53 Connecting the air vent valve to the safety flow

8.2.3 DHW cylinder connection

- Connect the DHW cylinder return to connector RS.
- Connect the DHW cylinder flow either at VS1 or VS2.
- Seal off the surplus VS connector.

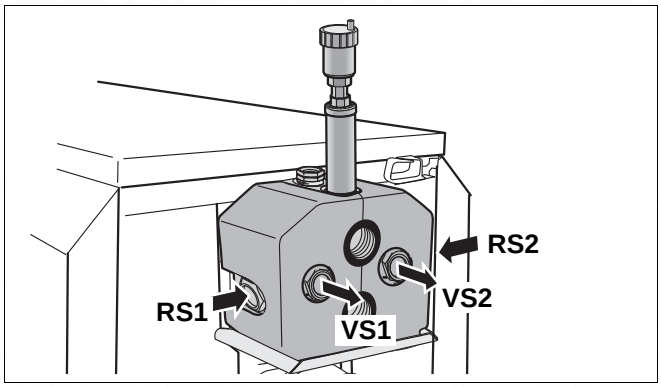

Fig. 54 DHW cylinder, connecting

8.2.4 Installing boiler fill and drain valve (accessory)

- Seal in the boiler fill and drain valve on connector EL.

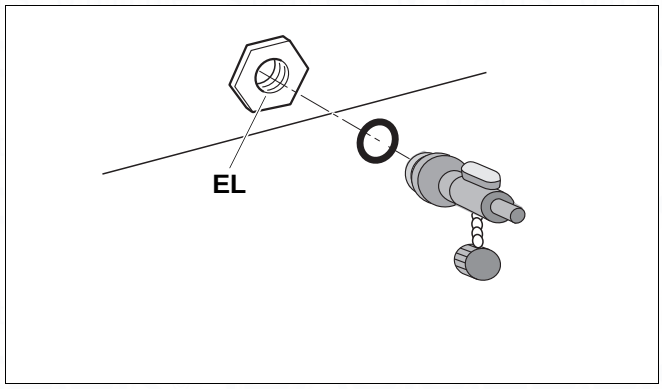

Fig. 55 boiler fill and drain valve, installing

8.3 Filling the heating system and checking for leaks

Before commissioning the heating system, check for leaks to prevent problems during operation. Pressurise the heating system to 1.3x permissible operating pressure (observe the safety pressure of the safety vale).

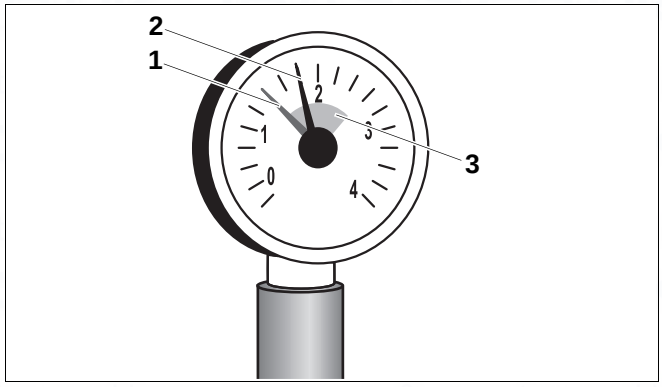

Fig. 56 Pressure gauge for sealed systems

1 Red needle
2 Pressure gauge needle
3 Green field

CAUTION!

SYSTEM DAMAGE

through overpressure during leak testing. Pressure, control and safety equipment may be damaged through excessive pressure.

- When you carry out a leak test, make sure that no pressure, control or safety equipment is fitted which cannot be isolated from the boiler water chamber.

- Shut off the pressure expansion vessel from the system by closing the cap valve.
- Check the connections and pipework for leaks.
- Open the mixing and shut-off valves on the hot water (primary) side.
- Connect the hose to the mains water tap. Push a hose filled with water onto the hose ferrule of the boiler fill & drain valve and open the valve.
- Open the cap of the automatic air vent by one full turn to allow air to escape.
- Slowly fill the heating system. Observe the pressure gauge whilst filling.
- Close the water tap and the boiler fill & drain valve once the required operating pressure has been reached.
- Bleed the system via the radiator bleed valves.
- Top up with water if the pressure drops as a result of bleeding the system.
- Take the hose off the boiler fill and drain valve.

8.4 Installing burner

Only fit burners to boilers supplied without integral burner, whose operating range corresponds to the boiler specification (➔ Section 3, page 7).

CAUTION!

SYSTEM DAMAGE

through incorrect burner.

- Only use burners which meet the technical boiler requirements.

- Fit the burner to the circular hole in the burner door.
- Connect the burner cable to the burner (➔ burner documentation).

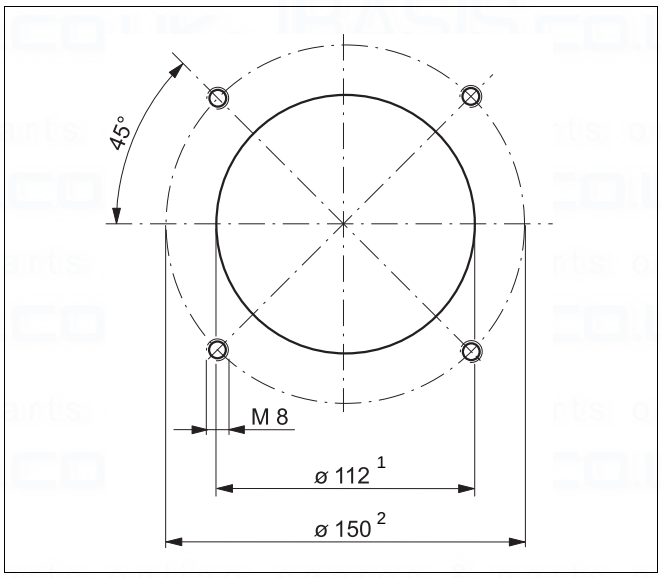

Fig. 57 Burner door circular hole (connecting flange acc. to DIN EN 226, dim. in mm)

1 Ø 130 mm for 95 kW boiler

2 Ø 170 mm for 95 kW boiler

8.5 Providing a fuel supply

Make the fuel connection in accordance with all locally applicable regulations. We recommend the installation of a fuel filter.

- Visually inspect the fuel pipe and clean or replace, if necessary.
- Fit the shut-off valve to the fuel supply pipe.
- Connect the fuel pipe to the boiler; it must be free of stress.
- Check the flue pipe for leaks.

8.6 Making the electrical connection

WARNING!

RISK TO LIFE

from electric shock.

- Only qualified electricians are permitted to carry out electrical work.
- Before you open the control device: Isolate all poles of the mains power supply and secure against unauthorised re-connection.
- Please observe all installation instructions.

8.6.1 Fitting the control device

- Locate the control device locking tabs in the slots.
- Push the control device towards the burner door.
- Push the control device down until the locking tabs click into place in the openings.

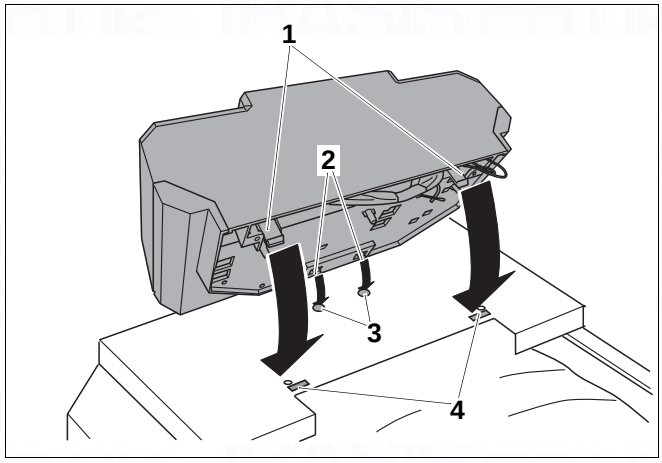

Fig. 58 Fitting the control device

1 Flexible hooks
2 Locking tabs
3 Slots
4 Openings

- Remove the control device cover. To do this remove the cover screws.
- Secure the control device using self-tapping screws.

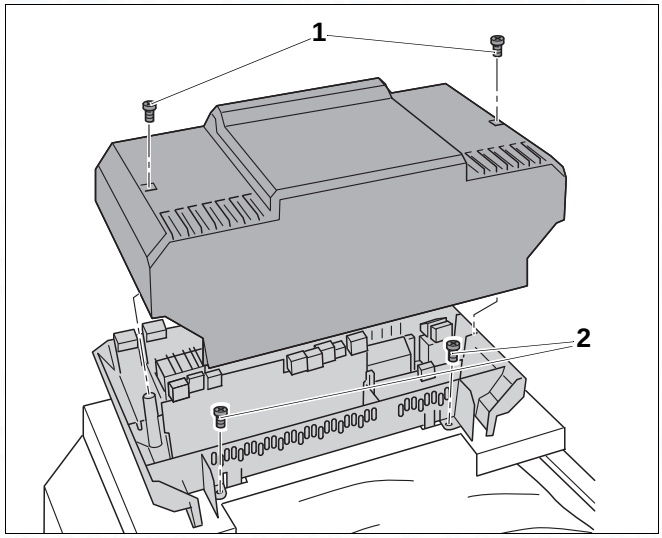

Fig. 59 Removing the cover

1 Cover screws
2 Self-tapping screws

8.6.2 Installing the temperature sensor set and burner cable

CAUTION!

SYSTEM DAMAGE

Capillary tubes may become unsound through severe kinking or sharp burrs.

- Carefully route capillary tubes using large radii.

- Route the capillary tubes and sensor cable through the cable entry in the front boiler cover and to the test point.
- Roll up surplus capillary tubes and sensor cable and lay it on the lagging.
- Route the burner cable through the cable entry in the front boiler cover to the control device.
- Connect the burner cable to the control device in accordance with the terminal markings.

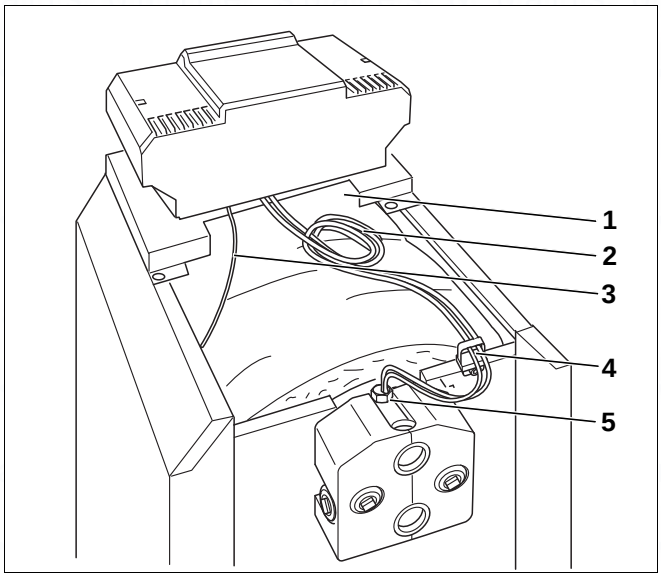

Fig. 60 Routing and connecting cables

1 Cable entry in the front boiler cover
2 Capillary tubes and sensor cable
3 Burner cable
4 Cable entry
5 Sensor well (test port)

- Insert the temperature sensor set with the compensating spring until it touches the bottom of the sensor well. The plastic spiral is then pushed back automatically.
- Push the sensor holder (part of the control device delivery) over the side of the sensor well head.

USER NOTE

Ensure good contact between the sensor surfaces and the sensor well to safeguard good temperature transfer. Use the compensating spring.

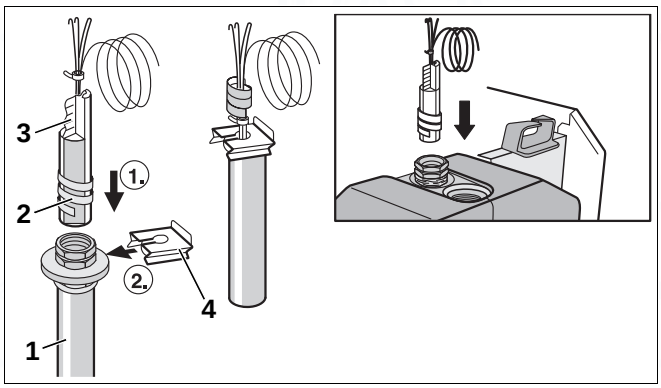

Fig. 61 Installing the temperature sensor set

1 Sensor well
2 Plastic spiral
3 Compensating spring
4 Sensor holder
5 Sensor well head

8.6.3 Mains power connection and connection of additional components

Create a permanent mains power connection in accordance with local regulations.

WARNING!

RISK OF FIRE

Hot components may damage electrical cables and leads.

- Ensure that all cables/leads are routed in the cableways provided; alternatively on top of the lagging of the boiler.

- Route all cables through the cable entries to the control device and connect in accordance with the wiring diagram.

8.6.4 Strain relief

Secure all cable runs with cable clips (standard control device delivery):

- Insert the cable clips together with the cable from the top into the slots in the frame (step 1).
- Push the cable clip down (step 2).
- Push against the clip (step 3).
- Flick the toggle up (step 4).

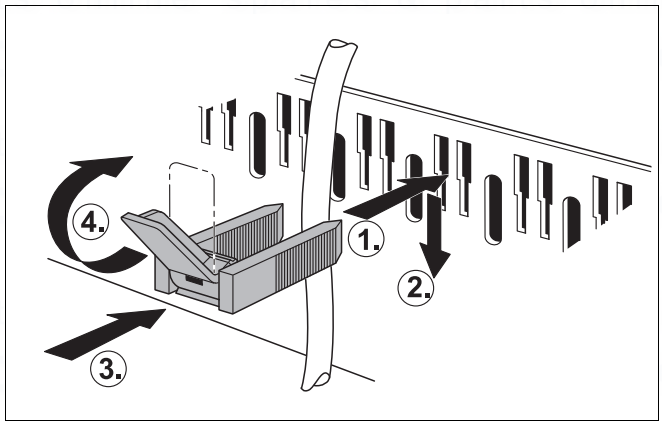

Fig. 62 Securing cables with a cable clip

8.7 Installing casing parts

- Locate and secure the control device cover.
- Fit the rear boiler cover.

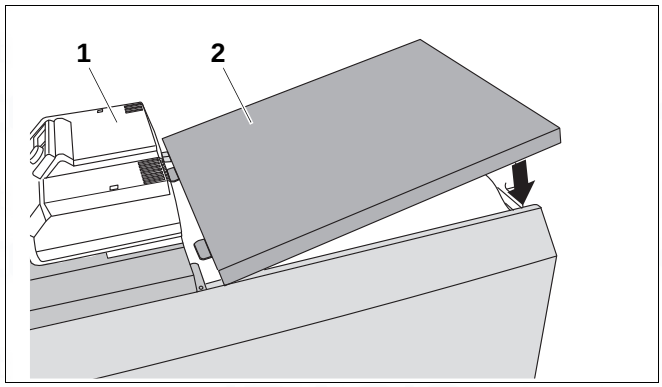

Fig. 63 Install the rear boiler cover

1 Control device cover

2 Rear boiler cover

9 Commissioning the heating system

This section describes commissioning of the boiler regardless of the type of control device used.

- Complete the commissioning report during the commissioning procedure (➔ Section 9.7, page 46).

For further conditions and requirements for boiler rooms, the combustion air supply, flue gas pipes and operation, see (➔ Section 3.3, page 9)

CAUTION!

BOILER DAMAGE

through excessive dust and airborne seed.

- Do not operate the boiler under very dusty conditions, e.g. caused by building work inside the boiler room.
- Install an air filter if the air supply is very dusty (e.g. because of unmade roads and paths or dusty working environments, such as quarries, mines etc.) or laden with airborne seed from composite blossom.

9.1 Creating operating pressure

Create the operating pressure required before commissioning.

CAUTION!

SYSTEM DAMAGE

through stress in materials as a result of temperature differences.

- Only fill the system when cold (the flow temperature should be no more than 40 °C).

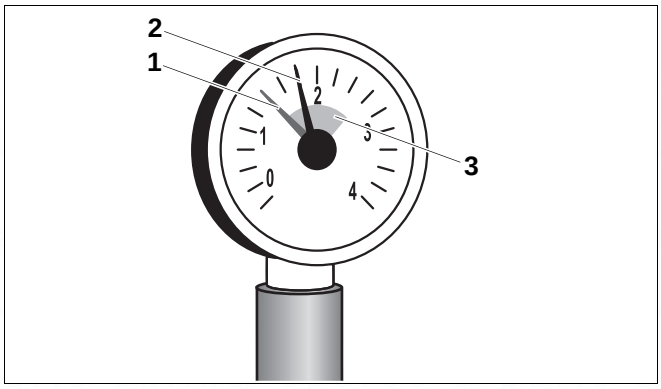

Fig. 64 Pressure gauge for sealed systems

1 *Red needle*

2 *Pressure gauge needle*

3 *Green field*

- Adjust the red pointer of the pressure gauge to the required operating pressure, i.e. at least 1 bar (applicable to sealed systems).
- Top up the heating water or drain via the boiler fill and drain valve until the required operating pressure has been reached (➔ Section 8.3, page 37).
- Bleed the heating system during filling.

9.2 Making the heating system operational

- Open the fuel supply to the main fuel shut-off valve.
- Switch ON the heating system emergency stop switch (if installed) and/or the appropriate domestic mains fuse.

9.3 Commissioning the control device and the burner

To continue the commissioning procedure, follow the steps for commissioning the burner. Refer to the ➔ burner documentation.

Start up the heating system using the control device ON/OFF switch. The burner starts if a heat demand is present or if you switch the control device to manual (➔ control device service instructions).

- Set the desired temperature on the boiler water thermostat.
- Select "Manual" mode ✋.
- Switch the ON/OFF switch on (position "I").

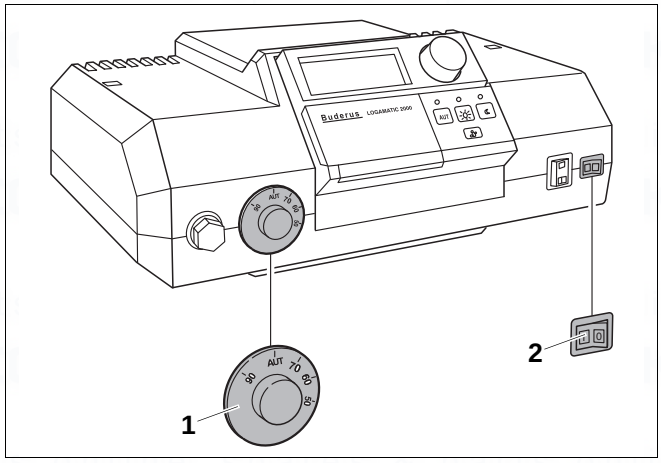

Fig. 65 Starting up the control device (for example Logamatic 2000)

1 *Boiler water thermostat*

2 *ON/OFF switch*

9.4 Raising the flue gas temperature

For the set flue gas temperature for the boiler, see the Specifications (➔ Section 3, page 7)

You may raise the flue gas temperature using one or more of the measures listed below if you notice during testing that the flue gas temperature is too low for the type of chimney used (risk of condensation):

– Remove hot gas baffle plates
– Remove the hot gas check plate

- Shut down the heating system (➔ Section 10.1, page 47).

WARNING!

RISK OF EXPLOSION

through escaping gas.

- Close the main shut-off valve if gas pipes need to be pulled off the gas burner to open the burner door. Route the remaining escaping gas outdoors.

CAUTION!

RISK OF BURNING

through touching hot boiler parts.

- Wear appropriate protective gloves or use pliers.

9.4.1 Removing hot gas baffle plates

You can remove the hot gas baffles in pairs to raise the flue gas temperature.

- Open the burner door; for this purpose, remove the two lateral hexagon bolts.
- Remove the hot gas baffles towards the front.
- Close the burner door with both hexagon bolts. Tighten the hexagon bolts evenly to properly seal the burner door.
- Re-check the flue gas temperature.

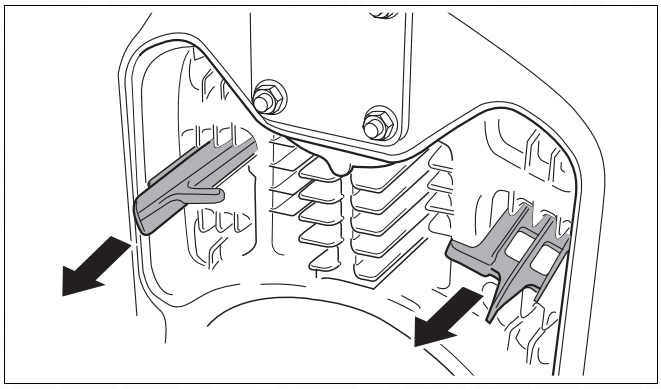

Fig. 66 Removing hot gas baffle plates (example: 2. hot gas flue)

9.4.2 Removing the hot gas check plate

You can remove the hot gas check plate to raise the flue gas temperature even higher if it is still too low after removing the hot gas baffle plates.

- Open the burner door; for this purpose, remove the two lateral hexagon bolts.
- Remove the hot gas check plate; for this purpose remove the screw.
- Re-check the flue gas temperature.

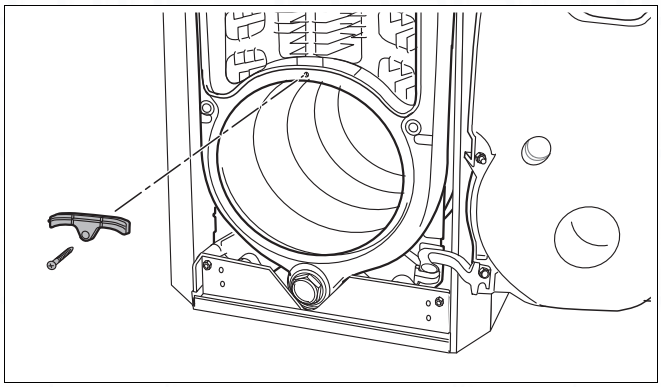

Fig. 67 Removing the hot gas check plate

9.5 Checking the high limit safety cut-out (STB)

The high limit safety cut-out interrupts the energy supply when the maximum permissible flow temperature is exceeded. To enable the boiler to be reset and re-started, the fault must be removed and the system must have dropped below the limit.

- Check the high limit safety cut-out function (➔ control device service instructions).

9.6 Installing casing parts

- Slot the boiler door casing into the folded edge on the front boiler cover.
- Slightly lift the burner door casing until it slots into the bottom cross bar.

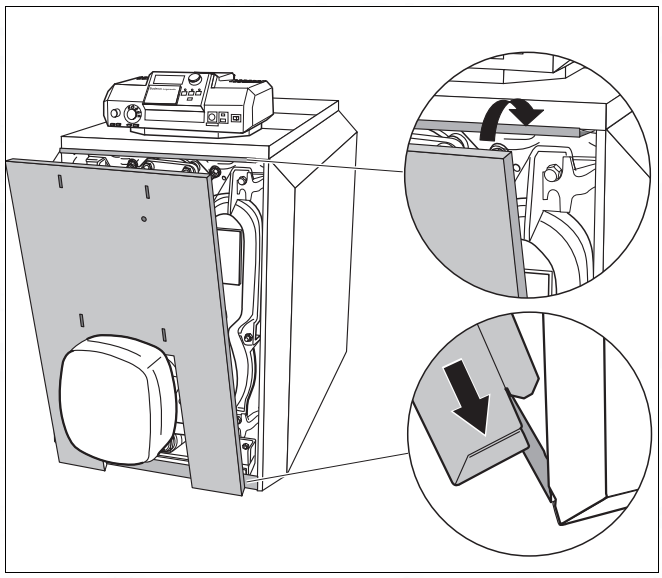

Fig. 68 Install the burner door casing

- Fit the decorative panel in the direction of the arrow and slot into place.

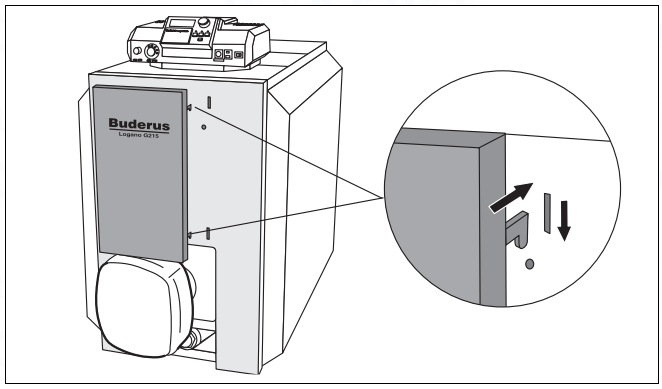

Fig. 69 Fitting the decorative panel

9.7 Commissioning report

- Sign all commissioning work as completed and enter the relevant date.

	Commissioning steps	Page	Actual values	Comments
1.	Fill heating system and check all connections for leaks	37	☐ _____ bar	
2.	Create operating pressure – Adjust the green field on the pressure gauge – Bleed the heating system – Adjust the expansion vessel inlet pressure (➔ see the expansion vessel documentation)	42	☐ _____ bar	
3.	Check the combustion air supply and the flue gas routing		☐	
4.	Start up the control device (➔ see the control device documentation)	43	☐	
5.	Start up the burner (➔ see the burner documentation)	43	☐	
6.	Check the flue gas temperature, and raise if required	43	☐ _____ °C	
7.	Check the high limit safety cut-out (STB)	44	☐	
8.	Match the control device settings to the customer's requirements (➔ control device documentation)		☐	
9.	Provide the system user with information and hand over all relevant technical documentation		☐	
	Confirm that commissioning was carried out by a properly qualified person Company stamp/signature/date			

USER NOTE

- Inform your customer of the correct fuel type and enter it into the table (➔ boiler operating instructions).

10 Shutting down the heating system

10.1 Standard shutdown

- Switch the control device ON/OFF switch to the OFF (position "0"). This switches the boiler and all its components OFF (for example the burner).
- Close the main fuel shut-off valve.

CAUTION!

SYSTEM DAMAGE

through frost.

The heating system can freeze up in cold weather if it has been switched off.

- Leave the heating system switched ON for as long as possible.
- Protect your heating system against freezing by draining the heating system and DHW pipework at the lowest possible point.

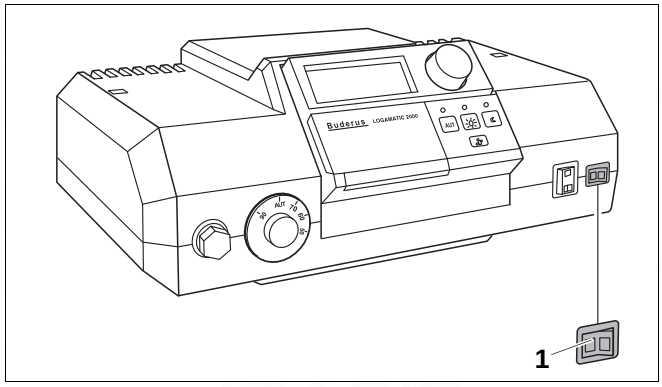

Fig. 70 Shutting down the heating system (Logamatic 2000)

1 *ON/OFF switch*

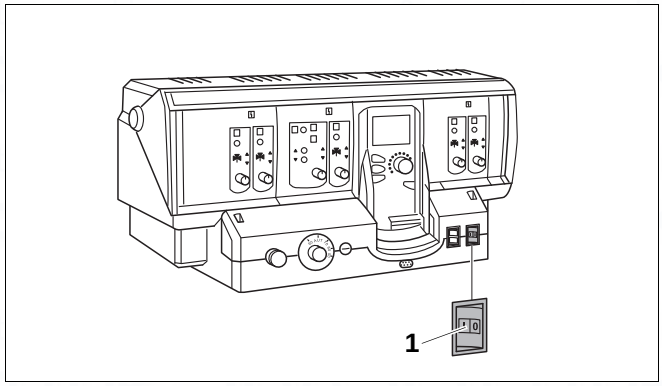

Fig. 71 Shutting down the heating system (Logamatic 4000)

1 *ON/OFF switch*

10.2 Emergency measures

Explain to your customer the measures required in emergencies, for example during a fire:

- Close the main fuel shut-off valve.
- Isolate the heating system from the mains power supply using the heating system emergency stop switch or the corresponding domestic fuse.

11 Heating system inspection and maintenance

11.1 Why is regular maintenance important?

Heating systems should be regularly maintained for the following reasons:

- to achieve a high level of efficiency and to operate the system economically (low fuel consumption),
- to achieve a high level of operational reliability,
- to maintain the cleanest possible combustion.

Offer an annual inspection and as-required maintenance contract to your customer. You can check in the inspection and maintenance reports what should be included in such contracts (➔ Section 11.5, page 52).

USER NOTE

You may order spare parts from the spare parts catalogue.

11.2 Preparing the boiler for cleaning

- Shut down the heating system (➔ Section 10.1, page 47).

WARNING!

RISK TO LIFE

from electric shock.

- Before you open the control device: Isolate all poles of the mains power supply and secure against unauthorised re-connection.

- Remove the burner door casing or the burner hood from the boiler.
- Pull the burner plug off the burner.

WARNING!

RISK TO LIFE

through the explosion of volatile gases.

- Work on gas-carrying parts may only be carried out by qualified and authorised personnel.

11.3 Cleaning the boiler

The boiler can be cleaned with brushes and/or by a wet method. Cleaning equipment is available as an accessory.

- Open the burner door; for this purpose, remove the two lateral hexagon bolts.

CAUTION!

RISK OF BURNING

through touching hot boiler parts.

- Wear appropriate protective gloves or use pliers.

11.3.1 Cleaning the boiler with cleaning brushes

- Note the position of the hot gas baffle plates to enable their correct re-installation later.
- Remove the hot gas baffle plates from the hot gas flues.
- Clean the hot gas baffle plates using one of the two cleaning brushes.

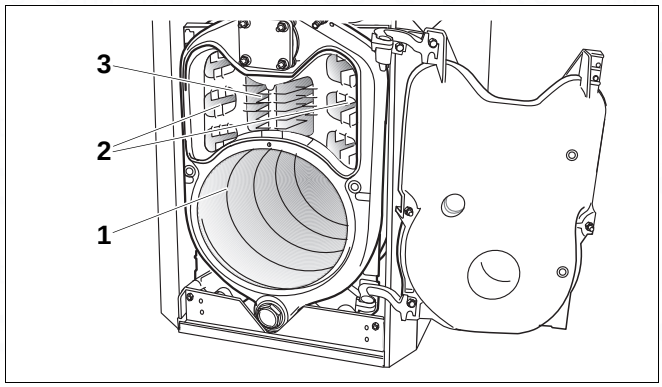

Fig. 72 Opening the burner door

1 *Combustion chamber*
2 *2rd hot gas flue*
3 *3rd hot gas flue*

- Clean the hot gas flues by rotating the round cleaning brush.

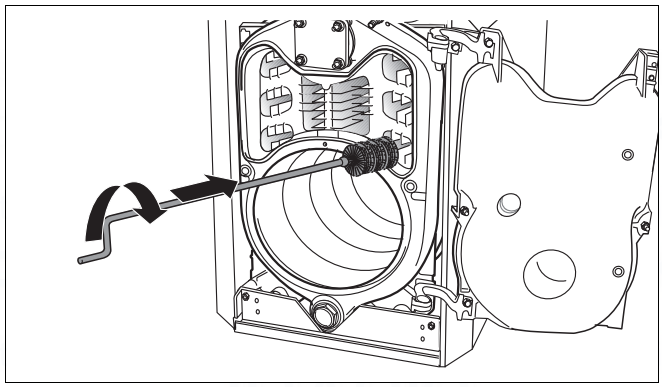

Fig. 73 Brushing out the hot gas flues

- Clean the combustion chamber with a flat brush. Remove all loose combustion residues from the combustion chamber, the hot gas flues and the flue outlet.
- Install the hot gas baffle plates in their original position.
- Check the packing cord on the burner door. Replace damaged or hardened packing cord.

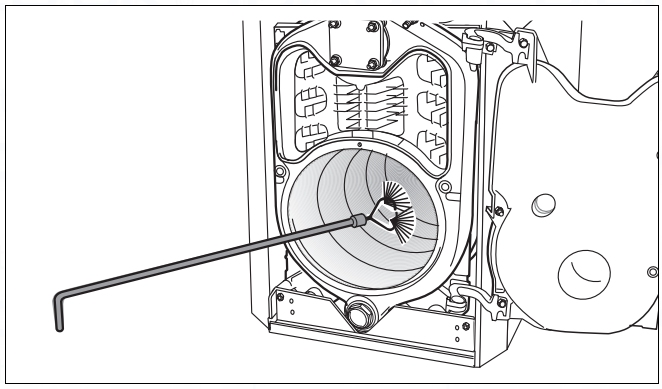

Fig. 74 Brushing out the combustion chamber

USER NOTE

You can obtain suitable packing cord from your local Buderus sales office.

- Close the burner door with both hexagon bolts. Tighten the hexagon bolts evenly to properly seal the burner door.

11.3.2 Wet cleaning (chemical cleaning)

When wet-cleaning, use a cleaning agent appropriate to the level of contamination (soot level and encrusted residues).

Proceed with the wet cleaning in the same order as described for cleaning with brushes (➔ Section 11.3.1, page 49).

USER NOTE

Observe the operating instructions for the cleaning agent. You may need to proceed differently from the method described here.

- Cover the control device with plastic to prevent spray from entering the control device.
- Spray cleaning agent evenly into the hot gas flues.
- Close the burner door, plug in the burner plug and start the heating system.
- Heat the boiler water temperature to at least 70 °C.
- Shut down the heating system.
- Brush out the hot gas flues.

11.4 Checking the heating system operating pressure

On sealed systems the pressure gauge marker must be within the green field.

Ensure that the red pressure gauge needle is set to the required operating pressure.

USER NOTE

- Set the overpressure to at least 1 bar.

- Check the heating system operating pressure.

The operating pressure is too low if the pressure gauge needle indicates below the green field. In this case, top up with water.

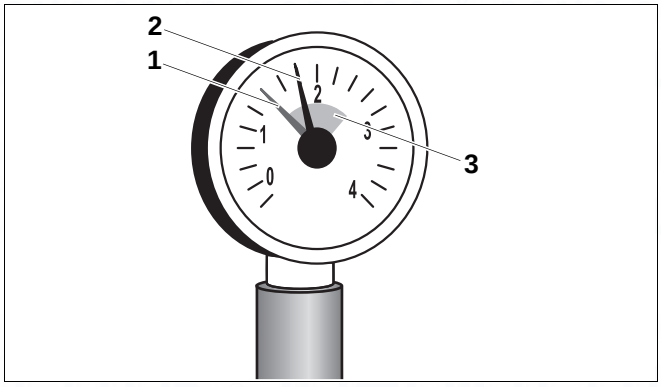

Fig. 75 Pressure gauge for sealed systems

1 *Red needle*

2 *Pressure gauge needle*

3 *Green field*

CAUTION!

SYSTEM DAMAGE

through frequent topping up.

The heating system may be damaged, depending on water quality, by corrosion or scaling if you frequently need to top up the water.

- Ensure that your heating system is bled properly.
- Check the heating system for leaks and correct operation of the expansion vessel.

CAUTION!

SYSTEM DAMAGE

through stress in materials as a result of temperature differences.

- Only fill the system when cold (the flow temperature should be no more than 40 °C).

- Top up with water via the boiler fill & drain valve.
- Bleed the heating system.
- Recheck the operating pressure.

11.5 Inspection and maintenance reports

- Sign all inspection work as completed and enter the relevant date.

The inspection and maintenance reports are also designed as templates.

	Inspection work	Page	Date: _____	Date: _____	Date: _____
1.	Check the general condition of the heating system		☐	☐	☐
2.	Visual and functional check of the heating system		☐	☐	☐
3.	Check all the gas and water components of the system for: – Leaks during operation – Leak test – Visible signs of corrosion – Signs of ageing		☐	☐	☐
4.	Check the combustion chamber and the heating surface for contamination; shut down the system for this step	48	☐	☐	☐
5.	Check the burner (➔ burner documentation)		☐	☐	☐
6.	Check the combustion air supply and flue gas routing for function and safety		☐	☐	☐
7.	Check the expansion vessel inlet pressure	50	☐	☐	☐
8.	Check the DHW cylinder and sacrificial anode for function (➔ DHW cylinder documentation)		☐	☐	☐
9.	Check the control device settings (➔ control device documentation)		☐	☐	☐
10.	Record the results of the inspection final checks, incl. measurements and test results		☐	☐	☐
	Confirm that inspection was carried out by a properly qualified person		Company stamp/ signature	Company stamp/ signature	Company stamp/ signature

	Date: _____	Date: _____	Date: _____	Date: _____	Date: _____	Date: _____	Date: _____
1.	☐	☐	☐	☐	☐	☐	☐
2.	☐	☐	☐	☐	☐	☐	☐
3.	☐	☐	☐	☐	☐	☐	☐
4.	☐	☐	☐	☐	☐	☐	☐
5.	☐	☐	☐	☐	☐	☐	☐
6.	☐	☐	☐	☐	☐	☐	☐
7.	☐	☐	☐	☐	☐	☐	☐
8.	☐	☐	☐	☐	☐	☐	☐
9.	☐	☐	☐	☐	☐	☐	☐
10.	☐	☐	☐	☐	☐	☐	☐
	Company stamp/ signature	Company stamp/ signature	Company stamp/ signature	Company stamp/ signature	Company stamp/ signature	Company stamp/ signature	Company stamp/ signature

USER NOTE

If you identify, during the inspection, that maintenance work is necessary, carry out the work immediately in accordance with requirements.

	As-required maintenance work	Page	Date: _____	Date: _____	Date: _____
1.	Shut down the heating system	47	☐	☐	☐
2.	Remove and clean the hot gas baffle plates	49	☐	☐	☐
3.	Clean the hot gas flues (heating surfaces) and combustion chamber, then re-install the hot gas baffle plates in their original position.	49	☐	☐	☐
4.	Check and, if required, replace gaskets/packing cord on the burner door and burner	49	☐	☐	☐
5.	Start up the heating system	43	☐	☐	☐
6	Final checks of the maintenance work		☐	☐	☐
7.	Check functioning and safety in operation		☐	☐	☐
	Confirm that maintenance was carried out by a properly qualified person		Company stamp/ signature	Company stamp /signature	Company stamp/ signature

	Date: _____	Date: _____	Date: _____	Date: _____	Date: _____	Date: _____	Date: _____
1.	☐	☐	☐	☐	☐	☐	☐
2.	☐	☐	☐	☐	☐	☐	☐
3.	☐	☐	☐	☐	☐	☐	☐
4.	☐	☐	☐	☐	☐	☐	☐
5.	☐	☐	☐	☐	☐	☐	☐
6	☐	☐	☐	☐	☐	☐	☐
7.	☐	☐	☐	☐	☐	☐	☐
	Company stamp/ signature	Company stamp/ signature	Company stamp/ signature	Company stamp/ signature	Company stamp/ signature	Company stamp/ signature	Company stamp/ signature

12 Remedying faults

We differentiate between two types of faults

– Burner faults and
– control device and heating system faults.

A fault lamp on the burner illuminates if the burner develops a fault. Generally, such faults can be reset by pressing the reset button on the burner.

Control device and heating system faults are indicated on the control device display if the control device has a display. For further information, see ➔ control device documentation.

Remedying burner faults

- Remove the burner hood, if the boiler has an integral burner.
- Press the burner reset button (➔ burner documentation).

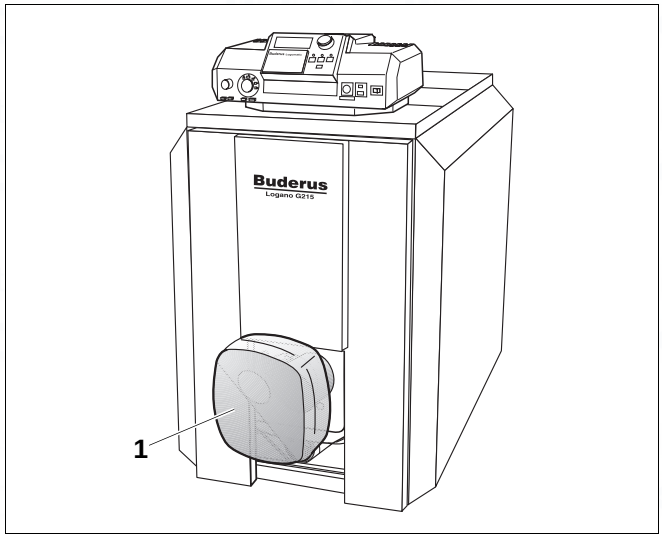

Fig. 76 Resetting the burner
1 *Burner*

CAUTION!

SYSTEM DAMAGE

through frost.

The heating system can freeze up in cold weather if it has been switched OFF through a fault shutdown.

- Immediately rectify the fault and restart the heating system.
- If this is not possible, protect your heating system against freezing by draining the central heating and DHW pipework at the lowest possible point.

13 Index

A

adjustable feet, fitting 27
ambient conditions 10
anchor rods 23

B

boiler block leak test 26
boiler casing, installing 29
boiler cover, installing 33
boiler fill & drain valve 25
boiler fill and drain valve, installing 37
boiler hub, closing 25
boiler output 7
boiler rating 7
boiler rear panel 29
boiler room 5, 10
boiler sections, assembly 17
burner cable 31
burner cable, fitting 40
burner cable, routing 31
burner door casing, fitting 45
burner door installation 28
burner faults, remedying 55
burner, installing 38

C

cable entry 33
capillary tubes 40
carbon dioxide content 7
central heating flow and return, connecting 36
cleaning 48
combustion air supply 11
combustion chamber 49
commissioning 42
compression tool 20
connecting block 23, 33, 34
connections 7
control device, fitting 39
cross bars, fitting 30

D

declaration of conformity 8
DHW cylinder, connecting 36
dirt trap 36
disposal 5
draught 8
dummy flange 25

E

emergency stop switch – heating system 42

F

faults, remedying 55
feed pipe 23
flow temperature 8
flue gas connection, making 35
flue gas temperature 7
flue gas temperature sensor, fitting 35
flue gas temperature, raising 43
flue outlet 25
flue pipe sealing collar 35
fuel supply 38
fuel, operating conditions 11

G

gas, if you smell 4

H

heating system, filling 37
hinge lobes 29
hinge pins 28
hot gas baffle plates, inserting 28
hot gas baffle plates, removing 49
hot gas flues, cleaning 49

I

inspection 48
installing the temperature sensor set 40
insulating shells 34

L

lagging 30
lagging, installing 30
leaking boiler block 26
leaks (hot water side) 37
left-hand closing 28

M

main shut-off valve 42
mains power supply 11
mains power supply voltage 11
mains power, connecting 40
maintenance work 54
maintenance, as-required 48

O

on-site test pressure 12
operating pressure, checking 50
operating pressure, permissible 8
original parts 4

P

packing cord, replacing 49

R

radiation protection, installing 34
rated output 7
report, commissioning 46
reports, inspection and maintenance 52

S

safety flow, connecting 36
sensor cable 40
sensor well 24, 27
shutting down 47
side panels 31
side panels, fitting 31
specifications 7
strain relief 41

T

test port 24, 27, 40
tools 5

W

wall clearances 15
water quality 12
water, topping up 51
wet cleaning 50

spares & parts online IBASIS.co.uk

spares & parts online IBASIS.co.uk

spares & parts online IBASIS.co.uk

spares & parts online IBASIS.co.uk

Buderus
Cotswold Way, Warndon, Worcester WR4 9SW
Customer service: 0870 421 5933
Technical support: 0870 421 5944
Fax: 01905 753130
www.buderus-commercial.co.uk

In the UK and IE, Buderus is a brand name of Bosch Thermotechnology Ltd.

Buderus