Gas condensing boiler

Installation and maintenance instructions for the contractor

Logano plus GB312

90 - 280 kW

Read carefully before carrying out installation and mainte-

Buderus

6 720 810 227 (2014/08) GB/IE

Table of contents

1 Key to symbols and safety instructions 4
1.1 Key to symbols 4
1.2 Safety regulations 4

2 Product information 5
2.1 Regarding these instructions 5
2.2 EU Declaration of Conformity 5
2.3 Determined use 5
2.4 Boiler designation 5
2.5 Scope of delivery 5
2.6 Accessories 5
2.7 Product overview 6
2.8 Dimensions and connections 7
2.9 Specifications 8
2.10 Gas throughput 10
2.11 Country-specific gas categories and supply pressures 10

3 Regulations 10
3.1 Standards and directives 10
3.2 Duty to obtain a permit and provide notification 10
3.3 Installation location 11
3.4 Combustion air connection 11
3.5 Heating water quality 11
3.6 Pipework quality 11
3.7 Frost protection 11
3.8 Tools, materials and auxiliary equipment 11
3.9 Validity of regulations 11

4 Transporting the boiler 11
4.1 Lifting and handling the boiler 12
4.2 Transporting the boiler on rollers 12

5 Installation 13
5.1 Requirements of the installation location 13
5.2 Wall clearances 13
5.3 Boiler aligning 13
5.4 Flue gas and supply air connections 14
5.4.1 Establishing the flue gas connection 14
5.4.2 Establishing the supply air connection (Room Sealed flue operation) 14
5.5 Establishing the water connections 15
5.5.1 Connecting the heating flow 16
5.5.2 Connecting the heating return 16
5.5.3 Installing a DHW cylinder 16
5.5.4 Fitting safety valve and automatic air vent valve or safety assembly (provided by customer) 17
5.5.5 Installing the condensate drain 17
5.5.6 Fitting the connection for the expansion vessel 18
5.6 Filling the heating system and checking for leaks 18
5.7 Establishing the fuel supply 19
5.8 Making the electrical connection 20
5.8.1 Installing the control unit 20
5.8.2 Mains power connection and connections of additional assemblies 20
5.8.3 Fitting the cover 21
5.9 Levelling the boiler vertically 21

6 Commissioning 21
6.1 Checking the operating pressure 22
6.2 Recording gas parameters 22
6.3 Checking the system equipment 22
6.4 Checking for leaks 23
6.5 Gas type conversion 23
6.5.1 Conversion for boiler size 90 and 120 kW 23
6.5.2 Conversion for boiler size 160 kW 23
6.5.3 Conversion for boiler sizes from 200 to 280 kW 23
6.5.4 Updating the type plate 24
6.6 Venting the gas line 24
6.7 Checking the ventilation and extract air apertures and the flue connection 25
6.8 Check the ventilation air diaphragm 25
6.9 Preparing the heating system for operation 25
6.10 Switching on the boiler at the BC10 25
6.11 Carrying out a flue gas test 26
6.12 Calling up service menus on the RC35 user interface and displaying monitor data 26
6.13 Checking and adjusting the CO_2 setting under full load 26
6.14 Check and adjust the CO_2 setting at partial load, then perform the final check and enter the values in the commissioning report 27
6.15 Switching the status display on the BC 10 to show the boiler temperature status 29
6.16 Returning to operating mode from the flue gas test . . . 29
6.17 Recording measured values 29
6.17.1 Feed pressure 29
6.17.2 CO content 29
6.18 Function tests 29
6.18.1 Checking the ionisation current 29
6.19 Measuring the gas supply pressure and static pressure 29
6.20 Checking for leaks during operation 31
6.21 Fitting sections of the casing 31
6.22 Informing the user, handing over technical documents 31
6.23 Commissioning report 32

7 Shut down the heating system 33
7.1 Shutting down the heating system at the basic controller 33
7.2 Shutting down the heating system in emergencies . . . 33
7.2.1 In an emergency 33

8 Environment / disposal 33

9 Inspection and maintenance 33
9.1 Preparing the boiler for inspection 34
9.2 General work 34
9.3 Internal leak test 34
9.3.1 Determining the test volume 34
9.3.2 Carrying out a leak test 35
9.4 Checking the operating pressure of the heating system 36
9.5 Measuring the CO_2 content 37
9.6 Determining the level of contamination of the burner and heat exchanger 37
9.6.1 Determining the level of contamination 37
9.7 Cleaning the burner and heat exchanger 38
9.7.1 Removing the burner 38
9.7.2 Wet cleaning the heat exchanger 39
9.7.3 Cleaning the burner 39
9.7.4 Checking and adjusting electrode position 40
9.8 Refitting detached parts 42
9.9 Checking for leaks during operation 42
9.10 Checking the ionisation current 42
9.11 Completing inspection and maintenance 42
9.11.1 Fitting the casing sections 42
9.11.2 Confirming inspection and maintenance 42
9.12 Inspection and maintenance reports 43

10 Troubleshooting 45
10.1 Recognising the operating condition and clearing faults 45
10.2 Emergency operation 45
10.3 Operating and fault displays 46
10.3.1 Control unit status indicators 46
10.3.2 Control unit fault displays 47
10.3.3 Status indicator of the burner control unit. 53

11 Appendix 54
11.1 Sensor curves 54
11.1.1 Temperature sensor at the burner control unit 54
11.2 Flow resistance on the heating water side 55
11.3 MC10 connection diagram 56
11.4 Connection diagram of burner control unit 59
11.5 Conversion of vol. – % CO_2 into vol. – % O_2 for burner setting 61

Index 62

1 Key to symbols and safety instructions

1.1 Key to symbols

Warnings

Warnings in this document are framed and identified by a warning triangle printed against a grey background.

Keywords at the start of a warning indicate the type and seriousness of the ensuing risk, if measures to avert the danger are not taken.

- **NOTICE** indicates that material losses may occur.
- **CAUTION** indicates that minor to medium personal injury may occur.
- **WARNING** indicates that severe personal injury may occur.
- **DANGER** indicates that life-threatening personal injury may occur.

Important information

Important information in cases where there is no risk of personal injury or material losses is identified by the symbol shown on the left. It is bordered by horizontal lines above and below the text.

Additional symbols

Symbol	Meaning
▶	a step in an action sequence
→	a reference to a related part in the document or to other related documents
•	a list entry
–	a list entry (second level)

Table 1

1.2 Safety regulations

Risk of explosion if you can smell gas

- ▶ Turn off gas service cock (→ page 33).
- ▶ Open windows and doors.
- ▶ Never operate electrical switches, pull plugs, or use the phone or doorbells.
- ▶ Extinguish all naked flames. Never smoke. Do not use lighters.
- ▶ **From outside** warn all occupants of the building, but do not ring doorbells. Call your gas supplier and approved contractor.
- ▶ If you can actually hear gas escaping, leave the building immediately. Prevent third parties from entering and notify police and fire brigade from outside the building.

Danger if you smell flue gas

- ▶ Switch off the appliance (→ page 33).
- ▶ Open windows and doors.
- ▶ Notify an approved contractor.

Risk of poisoning. Inadequate air supply can result in dangerous flue gas leaks

- ▶ Never block ventilation and extract air apertures or reduce their size.
- ▶ The boiler must not be operated, unless you immediately remedy the fault.
- ▶ Inform the system user in writing of the problem and associated risk.

Risk of explosion of flammable gases

- ▶ Any work on components in contact with gas may only be carried out by an approved contractor.

Risk of electric shock when the boiler is open

- ▶ Before opening the boiler:Disconnect the heating system from the power supply using the emergency stop switch or the relevant domestic fuse/MCB. It is not enough to switch off the control unit.
- ▶ Safeguard the heating system against unintentional reconnection.

Danger posed by explosive and easily flammable materials

- ▶ Never use or store easily flammable materials (paper, thinners, paints etc.) near the boiler.

Danger through failure to consider your own safety in an emergency such as a fire

- ▶ Never put yourself at risk of fatal injury. Your own safety is paramount.

Risk of scalding

- ▶ Prior to inspection and maintenance, let the heating system cool down. Temperatures in excess of 60 °C can be generated inside the heating system.

Installation, conversion:

CAUTION: System damage

- ▶ In the case of **open flue operation**, never close or restrict ventilation apertures in doors, windows and walls. If draught-proof windows are fitted, ensure there is an adequate combustion air supply.
- ▶ The boiler must not be operated, unless you immediately remedy the fault.
- ▶ Use the DHW cylinder exclusively for heating hot water.
- ▶ **Never shut off safety valves.**
  When it is being heated up, water may escape from the safety valve of the DHW cylinder.
- ▶ Never modify any parts in contact with flue gas.

Working on the boiler

- ▶ Only approved contractors may carry out installation, commissioning, inspection or any repair work required. During work observe all the relevant regulations (→ chapter 3, page 10).
- ▶ Observe all the other applicable instructions for other system components, accessories and spare parts.

Instructing the customer

- ▶ Explain to the customer how the boiler works and how to operate it.
- ▶ The user is responsible for the safety and environmental compliance of the heating system (Building Regulations).
- ▶ Inform the customer that they must not carry out any modifications or repairs.
- ▶ Maintenance and repairs may only be carried out by an authorised contractor.
- ▶ Use only original spare parts.
- ▶ Only use alternative combinations, accessories and wearing parts if these are designed for this application.

2 Product information

2.1 Regarding these instructions

These installation and maintenance instructions contain important information for the safe and appropriate installation, commissioning and servicing of this gas condensing boiler.

These installation and maintenance instructions are designed for contractors, who – on account of their professional training and experience, – are knowledgeable in handling heating systems and gas installations.

The following documents are available for this boiler:

- Operating instructions
- Installation and maintenance instructions
- Spare parts catalogue
- Water quality operator's log

The above documents are also available for downloading via the Buderus website.

Please contact us, if you have any suggested improvements in connection with the above documents, or if you have noticed any anomalies or errors. For contact addresses and our internet address, see the back cover of this document.

2.2 EU Declaration of Conformity

The design and operation of this product comply with European Directives and the supplementary national requirements. Its conformity is demonstrated by the CE marking. You can request the Declaration of Conformity for the product.
Please contact the address on the back page of these instructions.

Observe the details on the boiler type plate.

2.3 Determined use

Use the boiler for its intended purpose only and always in accordance with the installation and maintenance instructions.

Use the boiler solely for the heating of water in heating systems and/or for the indirect heating of potable water, e.g. with a DHW cylinder. Any other use is considered incorrect.

2.4 Boiler designation

The boiler designation comprises the following parts:

Logano:	Model name
GB	Gas condensing boiler
• 90 • 120 • 160 • 200 • 240 • 280	Maximum output in kW

Table 2 Boiler designation

2.5 Scope of delivery

The Logano plus GB312 is supplied as standard with a Logamatic BC10 basic controller and the MC10 control unit in two separately packed units.

- ▶ Upon receipt check that all packaging is in perfect condition.
- ▶ Check the scope of delivery for completeness.
- ▶ Dispose of packaging in an environmentally responsible manner.

Packed unit	Component	Packaging
1 (boiler)	Boiler assembled	1 carton
	Foot bolts	1 shrink-wrap package
	Technical documentation	1 shrink-wrap package
2 (separate)	MC10 control units (including BC10)	1 carton

Table 3 Scope of delivery

2.6 Accessories

Many individual accessories are available for this boiler. For details regarding suitable accessories, see the catalogue.

The following accessories are available from your local sales office:

- Safety assembly
- Flue accessories
- User interface, e.g. RC35

2.7 Product overview

The boiler is a gas condensing boiler with an aluminium heat exchanger.

Depending on the software version of the burner control unit, the boiler is equipped either with or without a non-return valve (→ chapter 5.5.1, page 16).

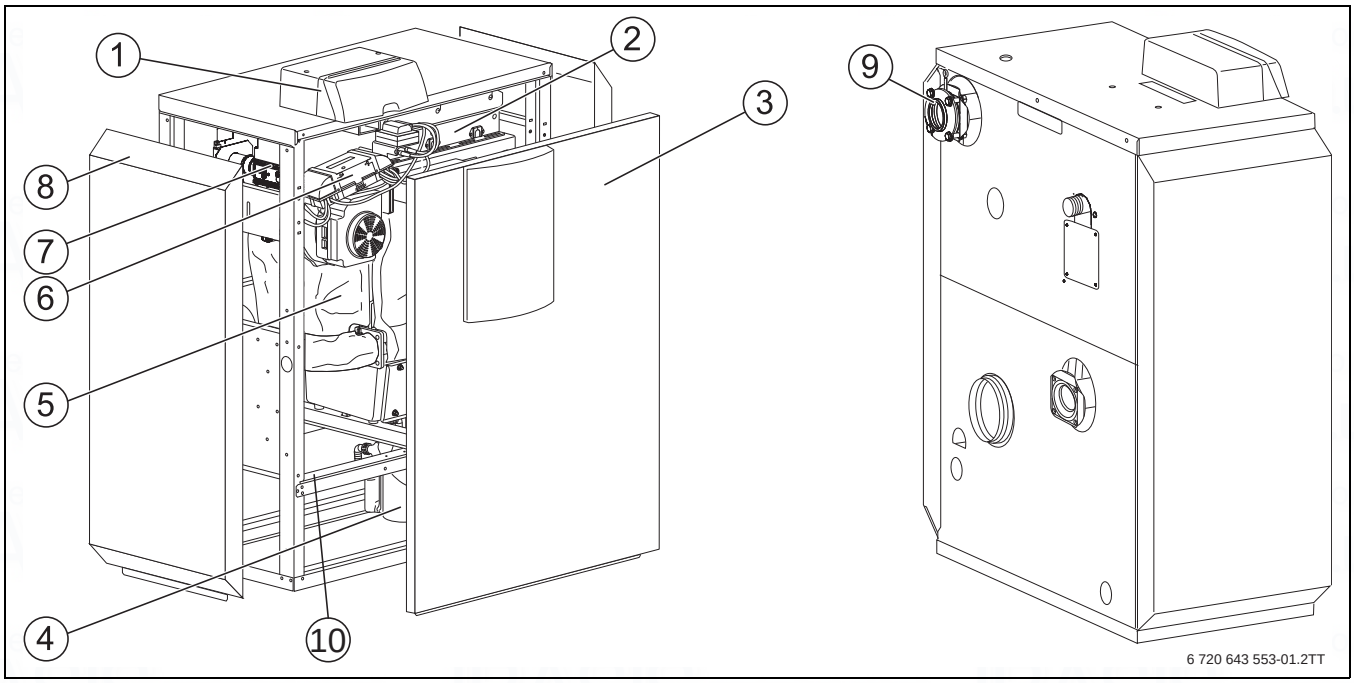

Fig. 1 Product overview

[1] Control unit
[2] Gas burner
[3] Boiler front panel
[4] Siphon
[5] Boiler block with thermal insulation
[6] Burner control unit
[7] Gas valve
[8] Boiler casing
[9] Non-return valve (→ chapter 5.5.1, page 16)
[10] Adjustment gauge for ignition electrodes (position at delivery; → chapter 9.7.4, page 40)

The boiler consists of:

- Control unit
- Appliance frame with casing
- Boiler block with thermal insulation
- Gas burner

The control unit monitors and controls all electrical boiler components.

The boiler block transfers the heat generated by the burner to the heating water. The thermal insulation reduces energy losses.

2.8 Dimensions and connections

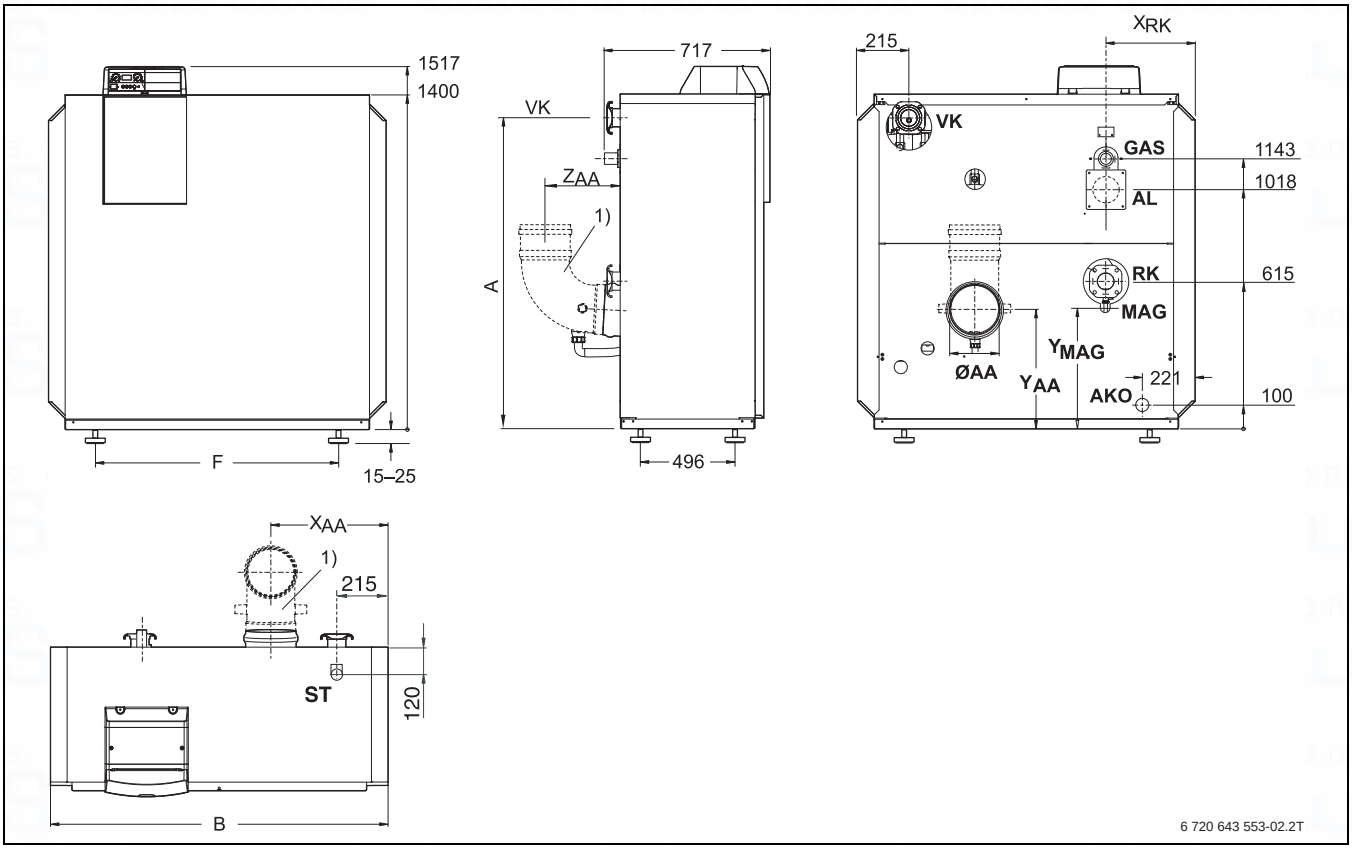

Fig. 2 Dimensions and connections GB312

[1)] Not included in the scope of delivery

Connections					
AA	=	Flue gas connection	AKO	=	Condensate outlet
AL	=	Combustion air pipe connection (Room Sealed operation only)	Gas	=	Gas connection
VK	=	Heating flow connection	ST	=	Connection for safety valve or safety assembly
MAG	=	Expansion vessel connection	RK	=	Heating return connection

Table 4 Connections

Boiler size (output in kW)	Unit	90	120	160	200	240	280
Number of linked sections		4	4	5	6	7	8
Width B	mm	994	994	1202	1202	1410	1410
Dimension X_{AA}	mm	332	332	384	436	488	540
Dimension X_{RK} (= X_{AL} = X_{Gas})	mm	270	270	374	270	374	270
Dimension F	mm	800	800	1008	1008	1216	1216
Dimension A	mm	1308	1308	1300	1300	1300	1300
Ø AA Required external diameter of the pipe to be pushed in	mm	160 +0.5	160 +0.5	160 +0.5	200 ± 0.5	200 ± 0.5	200 ± 0.5
Ø AA Minimum required depth to be pushed in	mm	80	80	80	90	90	90
Ø AA Maximum bevel height at the push-in end in axial direction	mm	5	5	5	7	7	7
Dimension Y_{AA}	mm	470	470	470	495	495	495
Dimension Y_{MAG}	mm	522	522	514	514	514	514
Dimension Z_{AA}	mm	145	145	145	310	310	310
AL (only Room Sealed) Required mean diameter of the pipe to be pushed in	mm	110 +0.4	110 +0.4	110 +0.4	110 +0.4	110 +0.4	110 +0.4

Table 5 Measurements and connection dimensions

Boiler size (output in kW)	Unit	90	120	160	200	240	280
AL (only Room Sealed) Minimum required depth to be pushed in	mm	58	58	58	58	58	58
AL (only Room Sealed) Maximum bevel height at the push-in end in axial direction	mm	5.5	5.5	5.5	5.5	5.5	5.5
VK and RK connection		Rp 2" (DN 50)	Rp 2" (DN 50)	PN6 standard flange (DN 65)	PN6 standard flange (DN 65)	PN6 standard flange (DN 65)	PN6 standard flange (DN 65)
ST connection		R 1"	R 1"	R 1¼ "	R 1¼ "	R 1¼ "	R 1¼ "
Ø Gas		R ¾ "	R ¾ "	R 1¼ "	R 1¼ "	R 1¼ "	R 1¼ "
Condensate connection		¾ " (DN20)	¾ " (DN20)	¾ " (DN20)	¾ " (DN20)	¾ " (DN20)	¾ " (DN20)

Table 5 Measurements and connection dimensions

2.9 Specifications

Boiler size (output in kW)		Unit	90	120	160	200	240	280
Number of linked sections			4	4	5	6	7	8
Rated output [Pn 50/30][1)] Temperature pairing 50/30 °C	Full load	kW	90	120	160	200	240	280
	Partial load	kW	31	31	42	62	75.2	87.2
Rated output [Pn 80/60][1)] Temperature pairing 80/60 °C	Full load	kW	84	113	150	187	225	263
	Partial load	kW	28	28	38	56.2	67.6	79.2
Rated heat input [Qn (Hi)][1)]	Full load	kW	86.5	115.9	155	193	232	271
	Partial load	kW	29	29	38.8	57.9	69.6	81.3
Flue gas and combustion air system								
Rated flue gas mass flow rate 50/30 °C	Full load	g/s	40.0	53.7	71.7	89.3	107.4	125.4
	Partial load	g/s	13.2	13.2	17.6	26.3	31.6	36.9
Rated flue gas mass flow rate 80/60 °C	Full load	g/s	40.0	53.7	71.7	89.3	107.4	125.4
	Partial load	g/s	13.2	13.2	17.6	26.3	31.6	36.9
Rated CO_2 content with natural gas	Full load	– % by vol.	9.1	9.1	9.1	9.1	9.1	9.1
	Partial load	– % by vol.	9.3	9.3	9.3	9.3	9.3	9.3
Rated flue gas temperature Temperature pairing 50/30 °C	Full load	°C	49	56	54	55	55	57
	Partial load	°C	34	32	31	34	33	34
Rated flue gas temperature Temperature pairing 80/60 °C	Full load	°C	70	75	75	75	75	75
	Partial load	°C	58	57	56	59	58	59
Fan for residual pressure differential (flue gas and combustion air system)		Pa	100	100	100	100	100	100
Temperature classification to be used for flue system in accordance with EN 1443			min. T120	min. T120	min. T120	min. T120	min. T120	min. T120
Pressure classification to be used for flue in accordance with EN 1443			H1, P1	H1, P1	H1, P1	H1, P1	H1, P1	H1, P1
Pressure classification to be used for connection piece in accordance with EN 1443			H1, P1 with additional mechanical impact stability up to 5000 Pa					
Condensate resistance classification to be used for flue system in accordance with EN 1443			W	W	W	W	W	W
Corrosion resistance classification to be used for flue system in accordance with EN 1443			Min. 2	Min. 2	Min. 2	Min. 2	Min. 2	Min. 2
Soot combustion resistance classification to be used for flue system in accordance with EN 1443			G, O	G, O	G, O	G, O	G, O	G, O
Maximum permitted flue gas return flow under wind conditions		%	10	10	10	10	10	10
Maximum permitted combustion air temperature		°C	35	35	35	35	35	35

Table 6 Specifications

Boiler size (output in kW)		Unit	90	120	160	200	240	280
Gas								
Fan			G1G 170	G1G 170	G1G 170	G1G 170	G1G 170	G1G 170
Gas valve			HONEY-WELL	HONEY-WELL	HONEY-WELL	Krom-schröder	Krom-schröder	Krom-schröder
			VR 4615V	VR 4615V	VR 415VE	CG 20	CG 25	CG 25
Diameter of gas restrictor								
Natural gas E, H, Es (G20) [2], Wobbe-Index 14,9 kWh/m³ [3]		mm	15.7	15.7	Gas restrictor not fitted	14.2	13.6	12.6
Natural gas LL (G25) [2] (Germany), Wobbe index 12.8 kWh/m³ [3]		mm	15.0	15.0	Gas restrictor not fitted	14.2	13.6	12.6
Natural gas LL (G25) [2] (Germany), Wobbe index 11.7 kWh/m³ [3]		mm	14.5	14.5	Gas restrictor not fitted	14.2	13.6	12.6
Natural gas L, Ei (G25) [2] (Netherlands, Belgium, France), Wobbe index 12.2 kWh/m³ [3]		mm	14.8	14.8	Gas restrictor not fitted	14.2	13.6	12.6
Design type (UK)			B_{23}, C_{63} – open flue and Room Sealed operation					
Design type (Belgium)			B_{23} – open flue operation					
Design type (Netherlands)			B_{23}, C_{63} – open flue and Room Sealed operation					
Heating circuit								
Water content of boiler [V] [1]		l	16	16	20	24	27	30
Pressure drop on the heating water side		mbar	See graph, page 55					
Maximum flow temperature		°C	85	85	85	85	85	85
Safety temperature for high-limit safety cut-out [T_{max}] [1]		°C	100	100	100	100	100	100
Permitted operating pressure [PMS] [1]		bar	4	4	4	4	4	4
Maximum differential between flow and return temperatures	Full load	K	30	30	30	30	30	30
	Partial load	K	40	40	40	40	40	40
Maximum permitted flow rate through the boiler [4]		l/h	9675	12900	17200	21500	25800	30100
Electrical data								
Protection class			IPX0D	IPX0D	IPX0D	IPX0D	IPX0D	IPX0D
Power supply		V/Hz	230/50	230/50	230/50	230/50	230/50	230/50
Power consumption [P(el)] [1]	Full load	W	84	150	190	230	270	330
	Partial load	W	40	40	45	50	50	50
Protection against electrocution		Protection class 1	Protection class 1	Protection class 1	Protection class 1	Protection class 1	Protection class 1	Protection class 1
Maximum permitted fuse protection for the appliance	A	10	10	10	10	10	10	10
Appliance dimensions and weight								
Transport dimensions width x depth x height		mm	859 x 563 x 1400		1065 x 563 x 1400		1273 x 563 x 1400	
Weight		kg	205	205	240	265	300	330

Table 6 Specifications

1) The details [xxx] correspond to the symbols and formula signs used on the type plate

2) Rated load with specified Wobbe index.

3) Upper Wobbe index for 0 °C, 1013 mbar

4) Is to be ensured by means of system sizing, and it corresponds to a minimum differential between flow and return temperatures of 8 K.

2.10 Gas throughput

Boiler size	Gas throughput		
	Natural gas E, H, Es (G20) Wobbe index 14.9 kWh/m³ 1)	Natural gas LL (DE) Wobbe index 12.8 kWh/m³ 1)	Natural gas LL, L, Ei (G25) Wobbe index 12.2 kWh/m³ 1)
kW	m³/h	m³/h	m³/h
90	9.2	9.8	10.6
120	12.3	13.2	14.3
160	16.4	17.6	19.1
200	20.4	21.9	23.8
240	24.6	26.3	28.6
280	28.7	30.7	33.4

Table 7 Gas throughput (relative to 15 °C gas temperature and 1013 mbar air pressure)

1) Upper Wobbe index for 0°, 1013 mbar °C

2.11 Country-specific gas categories and supply pressures

Country:	Nominal gas pressure mbar	Gas category	Gas family, gas group and reference gas set on delivery 1)	Set to rated gas pressure on delivery in mbar 2)
DE	20	I_{2ELL}	2E, G20	20
AT, BA, BG, BY, CH,CZ, DK, EE, ES, GB, GR, HR, IE, IT, KZ, LT, LU, LV, NO, PT, RO, RU, SE, SI, SK, UA	20	I_{2H}	2H, G20	20
FR	20/25	I_{2Esi} 3)	2Es 3), G20	20
BE	20/25	$I_{2E(R)}$	2Es 3), G20	20
PL	20	I_{2E}	2E, G20	20
HU	25	I_{2H}	2H, G20	25
DE 4)	20	I_{2ELL}	2LL, G25	20
NL	25	I_{2L}	2L, G25	25

Table 8 Country-specific gas categories and supply pressures

1) Conversion kits for gas type are available as accessories, or are enclosed in accordance with the version of the order.

2) The gas supplier must ensure the minimum and maximum pressures (in accordance with national regulations for public gas supply).

3) Es and Ei are sub-groups of gas group E

4) Gas group LL for Germany is supplied with a setting for an upper Wobbe index for 0 °C, 1013 mbar of 12.8 kWh/m³. This corresponds to the average standard supply for areas supplied with gas group LL and is designed to facilitate commissioning.

If the boiler has to be replaced in existing systems:

- ▶ Agree with the gas supplier, that the rated gas pressure is to be maintained in accordance with table 8 (country-specific gas category and supply pressures).

3 Regulations

This boiler complies with the following requirements in its design and operation:

- EN 677 EN 656, EN 483
- EN 437
- Gas Equipment Directive 2009/142/EC
- Efficiency Directive 92/42/EEC
- Electromagnetic Compatibility Directive 2004/108/EC
- Low Voltage Directive 2006/95/ EC

3.1 Standards and directives

Observe all country-specific regulations and standards during installation and operation, particularly:

- local building regulations regarding the installation conditions,
- local building regulations regarding ventilation and extract air systems and the chimney connection,
- regulations regarding electrical connection to the power supply,
- the technical regulations of the gas supplier about the connection of the gas burner to the public gas mains,
- the regulations and standards regarding safety equipment of water heating systems,

The following also applies in **Switzerland:**
The boilers have been tested and approved by the SVGW in accordance with the requirements of the Clean Air Regulation (LRV, Appendix 4) and the Fire Safety Regulations Guide from the VKF. During installation observe the guidelines for installing and operating combustion equipment G3 d/f, the SVGW Gas Directive G1, and local fire safety regulations in force within the canton.

In **Austria,** the guidelines G 1 (ÖVGW TR-Gas) and the regional building regulations must be observed during installation. The requirements concerning safety measures for small-scale combustion equipment (emissions) and energy saving measures (efficiency levels) according to Art. 15a B-VG are to be met, as are the statutory acts to implement these requirements in the laws of the country.

The following is to be observed for **Belgium**:

- Stipulations of the Belgian Royal Decree of 17/07/2009 (maximum CO content at 100% burner load = 110 mg/kWh) and NOx < 70 mg/kWh (see Declaration of Conformity)
- NBN D 51-003 - Internal lines for natural gas and positioning of the consumer units - General regulations
- NBN B 61-001 - Boiler rooms and chimneys: Boilers with a rated output of 70 kW or higher - Regulations for the installation location, the air supply and flue gas routing

3.2 Duty to obtain a permit and provide notification

- ▶ Ensure that the installation of a gas condensing boiler is notified to and approved by the relevant gas supply utility.
- ▶ Please note that regional approvals may be required for the flue system and the connection of the condensate outlet to the public sewerage system.
- ▶ Prior to commencing the installation, notify the responsible flue gas inspector and the waste water authority.

3.3 Installation location

NOTICE: System damage due to frost!
- Install the heating system in a room safe from the risk of frost.

DANGER: Risk of fire from flammable materials or liquids!
- Never store flammable materials or liquids in the immediate vicinity of the boiler.

NOTICE: Boiler damage through contaminated combustion air or contaminated air in the vicinity of the boiler!
- Never operate the boiler under dusty conditions or where the atmosphere is contaminated with corrosive substances. These might be, for example, paint shops, hairdressing salons and agricultural operations (manure).
- Never operate boilers where trichloroethene, halogenated hydrocarbons or other corrosive chemical substances are used or where such material is stored. These substances are contained, for example, in certain adhesives, solvents, cleaning agents and paints. In such cases, always select Room Sealed operation in a separate, hermetically sealed installation room that has a fresh air supply.

3.4 Combustion air connection

The installation location must provide the required combustion air vents, if the boiler is to be operated in open flue mode. Never position objects in front of these vents.

Ventilation must be provided in line with the requirements of BS 6644 and IGE/UP/10.

- Never place objects in front of the combustion air vents.
- Always keep combustion air vents free.
- The dimensions of the supply air line must be calculated in accordance with the current regulations.

3.5 Heating water quality

As there is no pure water for heat transfer, you must pay attention to the water quality. Poor water quality can damage heating systems due to scale formation and corrosion.

Water quality is an essential factor for increased efficiency, functional reliability, long service life and for maintaining the constant operational condition of a heating system.
- Observe the water quality requirements contained in the “Water Quality Operator's Log”.
- Warranty claims for the boiler will only be considered, if the water quality requirements have been met and the operator’s log has been maintained.

3.6 Pipework quality

When using plastic pipes in the heating system, for example in underfloor heating systems, ensure that this pipework is impermeable to oxygen in accordance with DIN 4726/4729. If the plastic pipes do not comply with these standards, there has to be system separation by means of heat exchangers.

NOTICE: Boiler damage through corrosion!
- Never operate this boiler as a gravity-fed or as open vented heating system.

3.7 Frost protection

NOTICE: System damage through frost.
- If there is the risk that pipework may freeze up when operating in room temperature-dependent mode (e.g. radiator in a garage), set the pump run-on time to 24 hours.

3.8 Tools, materials and auxiliary equipment

For boiler installation and maintenance, the tools generally required by heating system installers and those dealing with gas and water installations are required.

In addition, the following is appropriate:
- 2 pipes (approx. R 1¼ , approx. 2 m long) for carrying or 5 pipes (approx. R 1¼ , 0.7 m long) as supports for rolling the boiler.

3.9 Validity of regulations

Modified regulations or supplements are also valid at the time of installation and must be observed.

4 Transporting the boiler

This chapter details how to safely transport the boiler.

NOTICE: Boiler damage through impact!
The standard delivery of the boiler includes components that are susceptible to impact damage.
- Protect all components against impact influences when transporting the boiler.
- Observe the transport markings on the packaging.

NOTICE: Boiler damage through contamination!
If the boiler is not yet to be put into operation after unpacking:
- Protect the connections of the boiler against contamination by leaving the protective caps fitted to the connections.

4.1 Lifting and handling the boiler

After removing the front and side panels, the boiler can be carried with 2 pipes (R 1¼ , approx. 2 m long) to the installation location.

Removing the front panel and side panels

- ▶ Remove the locking screw [3] from the top of the front panel at the centre of the boiler.
- ▶ Slightly lift the front panel [1] and remove it towards the front.
- ▶ Remove the locking screws [3] from the side panels at the front and back of the boiler.
- ▶ Slightly lift the side panels [2] and remove them.

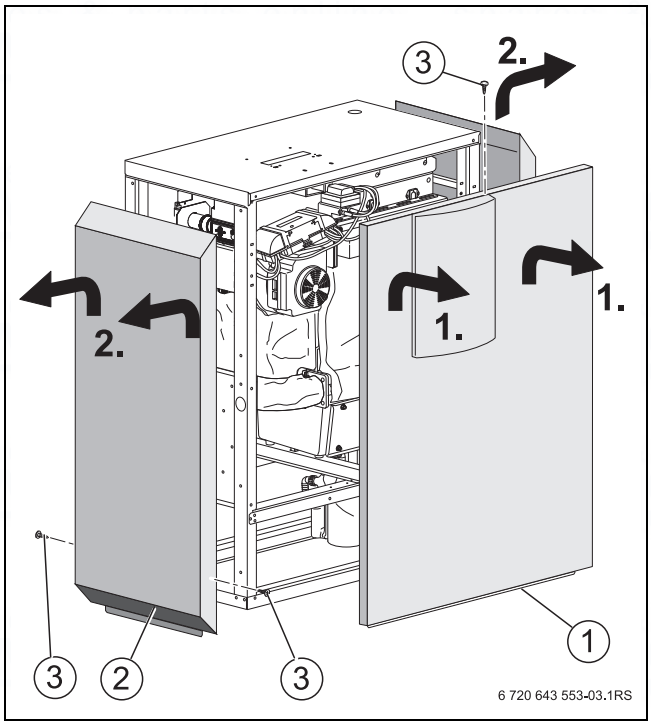

Fig. 3 Removing the front and side panels

[1] Front panel
[2] Side panel
[3] Locking screws

Lifting the boiler from its pallet

- ▶ To lift the boiler from its pallet [2], first remove locking screws [1] at the bottom of the boiler.

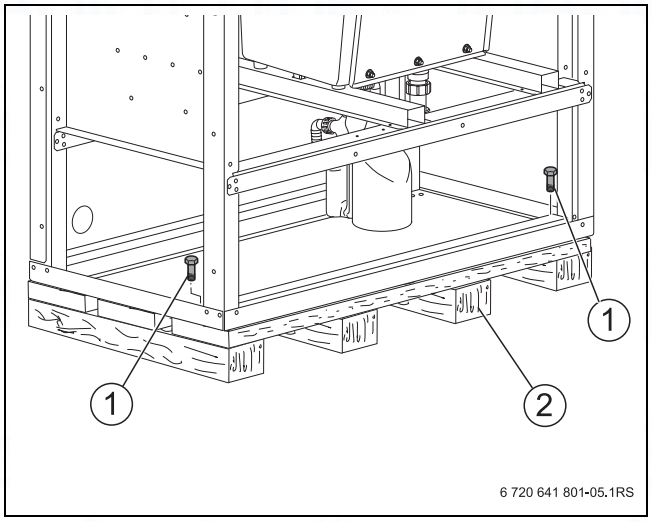

Fig. 4 Lifting the boiler from its pallet

[1] Locking screws
[2] Pallet

Transporting the boiler using pipes

WARNING: Risk of injury through incorrect lifting and carrying!

- ▶ Lifting and carrying the boiler requires at least 4 persons.
- ▶ Only lift the boilers at the points provided.
- ▶ Secure the boiler against slippage.

- ▶ Slide the pipes through the holes in the front face of the boiler.
- ▶ Secure the pipes against slipping at the points [1] shown in Fig. 5, e.g with adhesive tape.
- ▶ Carry the boiler to the installation location.

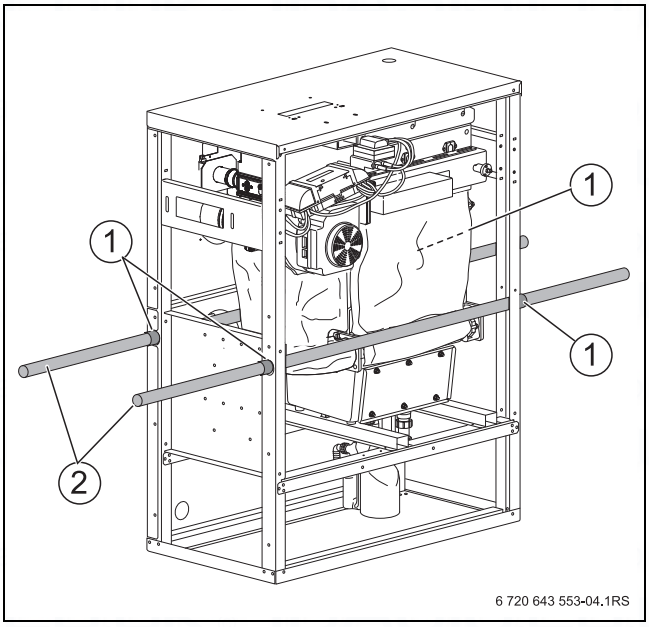

Fig. 5 Transporting the boiler using pipes

[1] Points to secure the boiler against slippage
[2] Pipe

4.2 Transporting the boiler on rollers

If the path to the installation location is level, the boiler can also be rolled. For this use at least 5 pipe sections of approx. 700 mm length (R 1¼ " diameter) as rolling supports.

- ▶ Position the pipe sections approx. 400 mm apart on the floor.
- ▶ Lift the boiler onto the pipe sections and carefully transport it to the installation location.

You can also use commercially available transport rollers.

- ▶ Ensure even load distribution on the load-bearing parts to prevent distortion of the bottom panel.

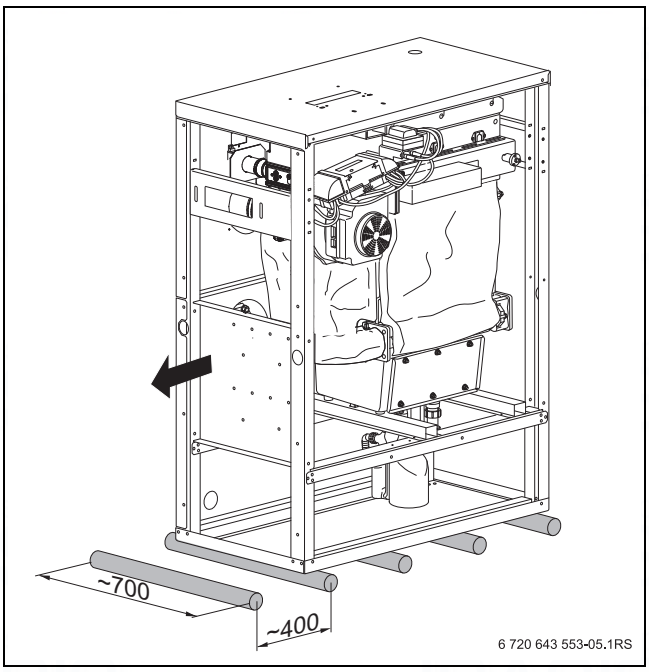

Fig. 6 Transporting the boiler on rollers (measurements in mm)

5 Installation

This chapter details how to install the boiler correctly. This involves the following steps:

- Siting
- Flue gas connection
- Hydraulic connection
- Connecting the fuel supply

5.1 Requirements of the installation location

NOTICE: System damage due to frost!

▶ Site the heating system in a room safe from the risk of frost.

DANGER: Danger through explosive and easily flammable materials!

▶ Never use or store easily flammable materials (paper, curtains, clothing, thinners, paints, etc.) in the vicinity of the boiler.

NOTICE: Risk of boiler damage from contaminated combustion air!

▶ Never use chlorinated cleaning agents or halogenated hydrocarbons (as contained in spray cans, solvents, cleaning agents, paints and adhesives, for example).

▶ Never store or use such materials in the boiler room.

▶ Avoid very dusty atmospheres (building dust).

NOTICE: Boiler damage through overheating.

Excessive ambient temperatures can result in damage to the heating system.

▶ Ensure that ambient temperatures are above 0 °C and below 35 °C.

▶ Where the environment surrounding the boiler is sensitive to noise (e.g. residential units), carefully consider the location.

5.2 Wall clearances

Position the boiler with the recommended wall clearances. Reducing to the minimum clearances makes access to the boiler difficult.

The installation surface or foundation must be level and horizontal.

Any additionally required wall clearances for other assemblies, such as for example DHW cylinders, pipe connections, flue gas silencers or other components on the flue gas side, are to be taken into consideration.

Dimension	Wall clearance (mm)	
	minimum	recommended
A	500	700
B	550	700
C	100	500
D	500	700

Table 9 Recommended and minimum wall clearances (dimensions in mm)

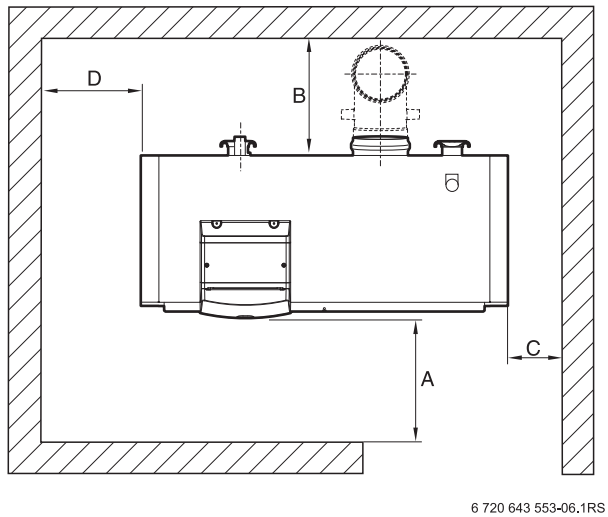

Fig. 7 Wall clearances in the installation room (boiler placed on the left or right).

5.3 Boiler aligning

The boiler must be aligned horizontally, so that no air can collect in the boiler, and to ensure that the condensate can freely drain from the condensation catch pan.

NOTICE: Boiler damage through insufficient load-bearing capacity of the installation area or unsuitable substrate!

▶ Ensure that the installation area offers sufficient load-bearing capacity.

▶ Bring the boiler into its final position.

▶ Align the boiler horizontally by means of the adjustable feet [1] and a spirit level [2].

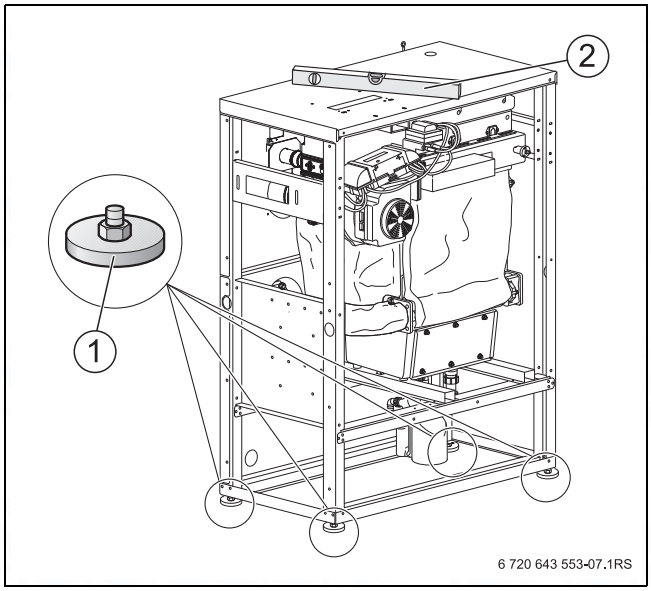

Fig. 8 Levelling the boiler

[1] Adjustable feet
[2] Spirit level

5.4 Flue gas and supply air connections

5.4.1 Establishing the flue gas connection

The flue system is to be carried out in accordance with either pressure classification (EN 1443) H1 or pressure classification (EN 1443) P1 with additional mechanical impact stability up to 5000 Pa.

Classification	Leakage rate	Rated pressure	Operating mode
	$l*s^{-1}*m^{-2}$	[Pa]	
P1	0.006	200	Positive pressure/ negative pressure[1)2)]
H1	0.006	5000	Positive pressure/ negative pressure[3)]

Table 10 Pressure classifications of the flue system

1) Positive pressure up to maximum 200 Pa
2) Usage only with additional mechanical impact stability up to 5000 Pa in the connection piece
3) Maximum pressure 5000Pa

When installing the flue gas connection, observe the following:

- Country-specific regulations.
- Observe the installation instructions of the flue accessories.
- The flue pipe cross-section must comply with calculations in accordance with the current regulations.
- Select the shortest possible flue gas path.
- Lay the flue pipes so that they slope upwards.
- The condensate that forms in the flue must be drained away before it can reach the boiler. Condensate must not be allowed to flow into the appliance.

The Grills for the combustion air supply and the flue gas routing must not be installed on opposite walls of the building.

The boiler must not be connected to any combined flue system with motorised combustion systems (e.g. combined heat and power unit).

DANGER: Risk to life from escaping flue gas inside the installation location!

▶ Gaskets in the flue gas connections must be present and undamaged, and they must be correctly inserted.

▶ Insert the boiler connection elbow or connector (accessory) into the flue gas connection.
▶ Establish the flue gas connection in accordance with the country-specific requirements.

Centrocerin (accessory) must be used as a slip agent for installing the boiler connection elbows or connectors into the female connection of the condensation catch pan.

NOTICE: Damage to gaskets due to burred edges on the insertion ends of the pipe parts!

▶ Ensure that the insertion ends are free of burrs. If chamfering on site is required, it must be in accordance with the manufacturer's documentation.

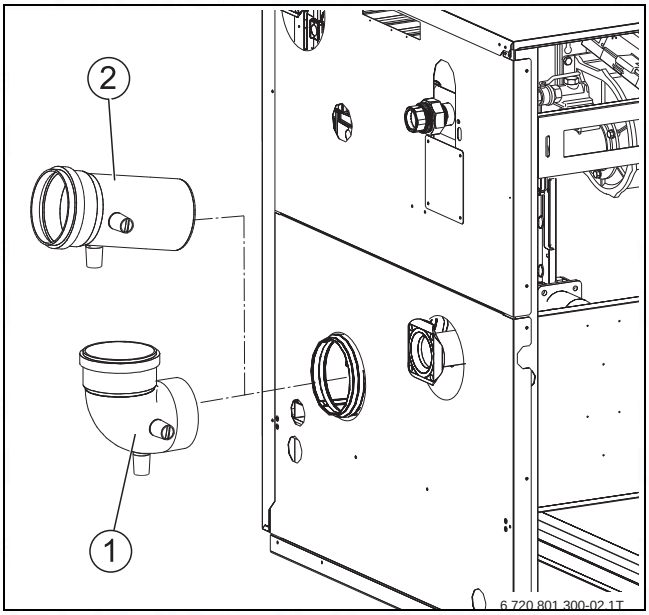

Fig. 9 Fitting the flue gas connection

[1] Boiler connection elbow (accessory)
[2] Connector (accessory)

So that the condensate can be drained away before it reaches the boiler, a version of the boiler connection elbow or connector is available as an accessory, which has a condensation drain. If the boiler connection elbow or connector from the accessories is not used, it must be ensured that there is adequate sizing of the condensate drain (min. DN20).

5.4.2 Establishing the supply air connection (Room Sealed flue operation)

The combustion air is supplied to the boiler either through an external wall connection, a duct or separate pipework in the duct.

The dimensions of the supply air line must be calculated in accordance with the current regulations.

For Room Sealed operation the required RLU supply air connection elbow is available as an accessory.

- ▶ If the side panel is still fitted, remove it now.
- ▶ Remove the cover from the rear panel.

To avoid problems with the installation of the gas connection, install the connection for the RLU supply air connection elbow either on the right or on the left.

- ▶ Insert the RLU supply air connection elbow through the rear panel into the air suction port.

Insulate the air supply system to prevent condensate forming inside it.

- ▶ Establish the supply air connection up to the RLU supply air connection elbow, using a standard air supply system, which complies with the country-specific requirements.
- ▶ Observe the installation instructions for the standard air supply system.

NOTICE: Damage to gaskets due to burred edges on the insertion ends of the pipe parts!
- ▶ Ensure that the insertion ends are free of burrs. If chamfering on site is required, it must be in accordance with the manufacturer's documentation.

The Grills for the combustion air supply and the flue gas routing must not be installed on opposite walls of the building.

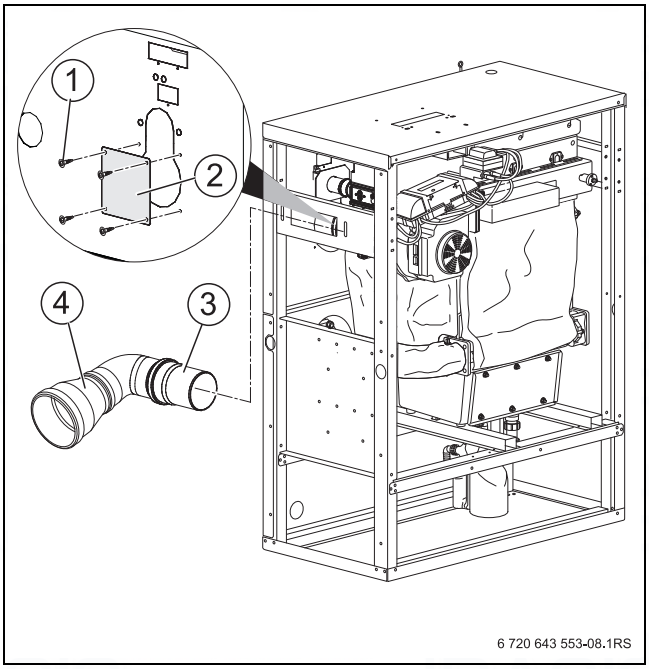

Fig. 10 Making the ventilation air connection for Room Sealed operation

[1] Screw
[2] Cover
[3] Ventilation air connection elbow RLU (accessory)
[4] Adaptor (accessory)

5.5 Establishing the water connections

NOTICE: System damage due to leaking connections!
- ▶ Install all lines free from stress to the boiler connections.
- ▶ Use new gaskets if fittings need to be undone.
- ▶ Only tighten flanges in the heating flow and return after the connections have been made.
- ▶ Before installing the pipe connections, check connections and gaskets on the boiler for possible damage.

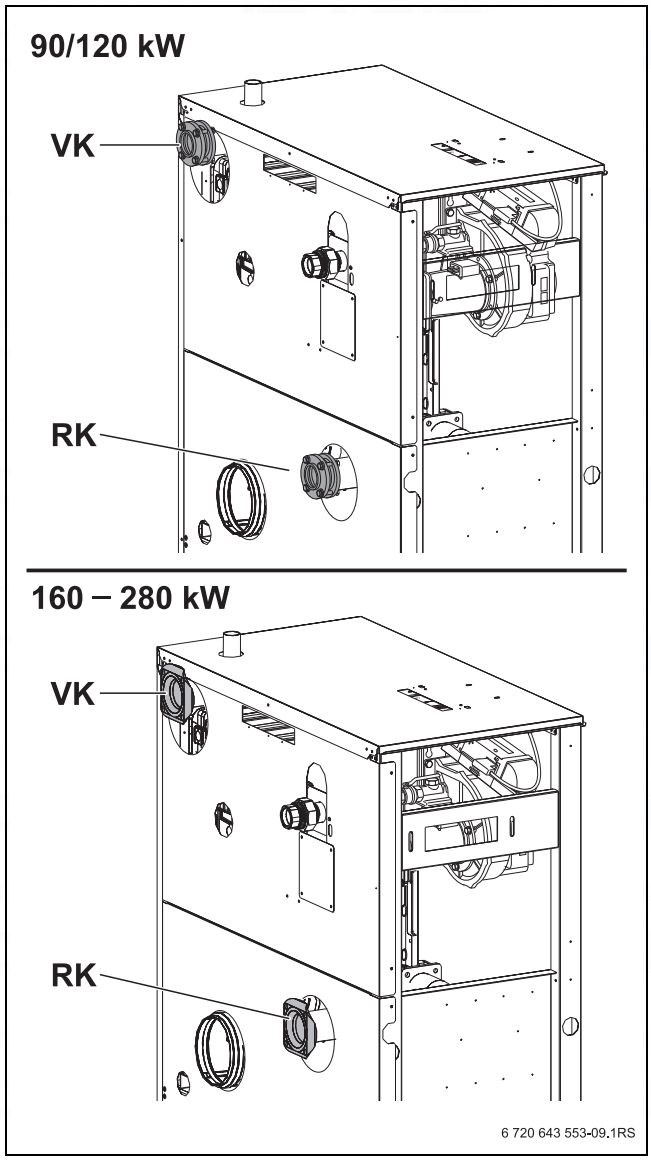

Fig. 11

[RK] Return
[VK] Flow

Boiler output	Heating flow (VK) / Heating return (RK)	
90 - 120 kW	DN 50	Rp 2
160 - 280 kW	DN 65	PN6 standard flange EN1092

Table 11 Dimensions of the connections on the water side

We recommend that a dirt trap (accessory), provided by the customer, is installed in the return to prevent contamination on the water side.

5.5.1 Connecting the heating flow

Depending on the software version of the burner control unit, the boiler is equipped either with or without a non-return valve.

Non-return valve included in the scope of delivery:
- ▶ Install the non-return valve [4] in the flow.

- ▶ Unscrew the mating flange [3] in the flow VK.
- ▶ Fit the mating flange to the flow pipe (on site) (→ table 11, page 15)

NOTICE: System damage through incorrectly installed or missing non-return valve!
- ▶ Install the non-return valve with the direction of flow away from the boiler (observe the arrow on the non-return valve - the non-return valve closes against the direction of the arrow).

- ▶ Insert the gasket [8] between the mating flange [3] and the non-return valve [4].
- ▶ Insert the gasket between the flange on the boiler and the non-return valve.
- ▶ Tighten the flange connection hand-tight with the four bolts [1] and nuts [7] (each with washer).
- ▶ Centre the non-return valve with the fitting aid [5] and then tighten the bolts firmly.

Non-return valve not included in the scope of delivery:
In the case of single-boiler systems, a non-return valve is not required. The software of the burner control unit detects an incorrect flow. This results in a fault shutdown.

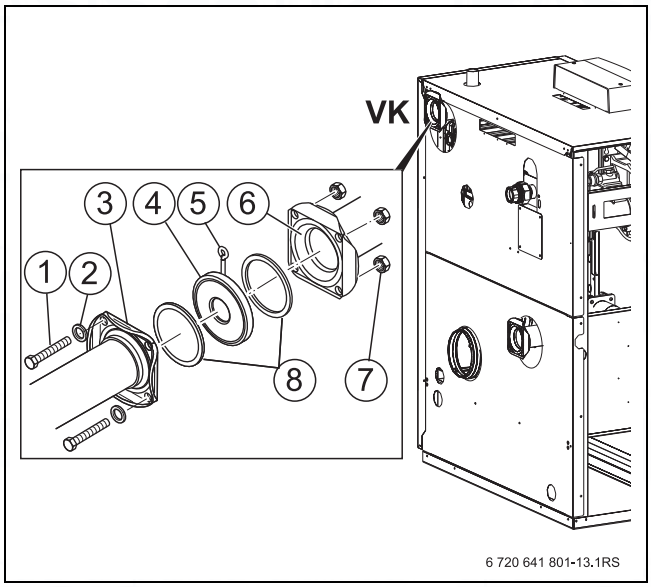

Fig. 12 Installing the supply flow

[1] Bolt (4 x)
[2] Washer (4 x)
[3] Mating flange
[4] Non-return valve
[5] Installation aid
[6] Flange on the flow to the boiler
[7] Nuts with washers (4 x)
[8] Gasket (2 x)

Multi-boiler systems or cascades

In multi-boiler systems a non-return valve [4] must be fitted to prevent standby losses and faults (irrespective of the software version of the burner control unit).

- Where the boiler accessories are used for connecting cascades, the non-return valve is contained in the accessory pack.
- When creating multi-boiler systems or cascades on site, use the following non-return valves:
  - for boilers 90/120 kW: part no. 8718578370, non-return valve DN50-PN6-Oventrop packed
  - for boilers 160 - 280 kW: part no. 8718578371, non-return valve DN65-PN6-Oventrop packed

5.5.2 Connecting the heating return

- ▶ Unscrew the mating flange [3] from the return RK.
- ▶ Fit the mating flange to the return pipe (on site) (→ table 11, page 15).
- ▶ Insert the gasket [8] between the flange on the boiler and the mating flange.
- ▶ Secure the flange connection with four bolts [1] and nuts [7] (each with washers).

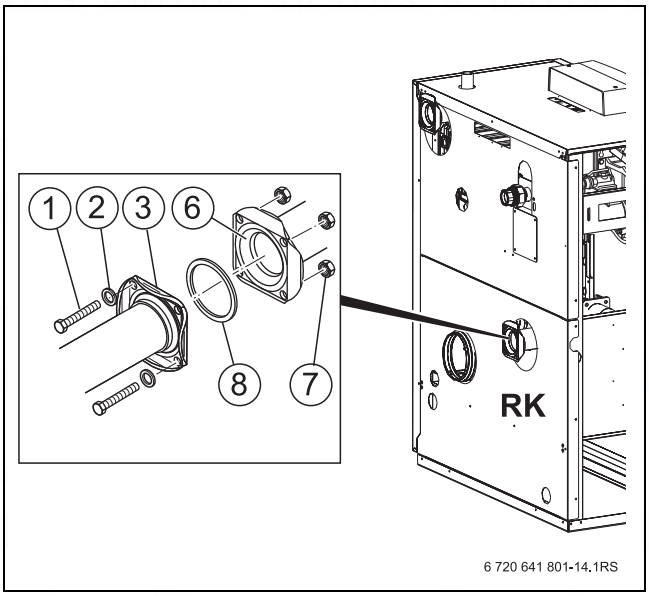

Fig. 13 Fitting the return

[1] Screw (4 x)
[2] Washer (4 x)
[3] Mating flange
[6] Flange on boiler return
[7] Nuts with washers (4 x)
[8] Gasket

5.5.3 Installing a DHW cylinder

You can also connect a DHW cylinder to the VK and RK connections. The external cylinder primary pump can be controlled by the control unit.

5.5.4 Fitting safety valve and automatic air vent valve or safety assembly (provided by customer)

NOTICE: System damage through incorrect installation!
- ▶ Fit the safety valve and automatic air vent valve or safety assembly to the safety connection on the flow.

▶ Fit the blow-off line to the safety valve provided by customer.

The following automatic air vent valves can be used with the safety valve:
- Automatic air vent valve with shut-off
- Taco-Hy-Vent air vent valve

▶ Observe the installation instructions for the accessories.

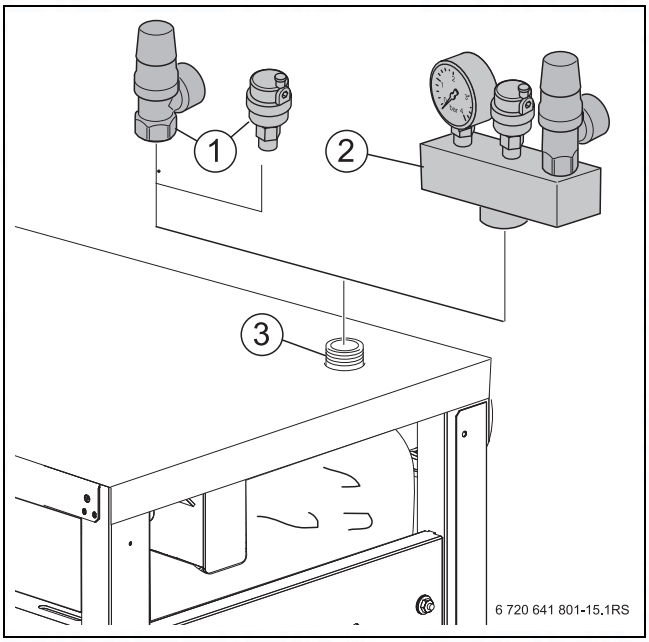

Fig. 14 Installing the safety valve

[1] Safety valve and automatic air vent valve (connection on site; required accessory)
[2] Safety assembly (required accessory)
[3] Safety connection
R 1" (for 90 to 120 kW)
R 1¼ " (for 160 to 280 kW)

5.5.5 Installing the condensate drain

DANGER: Risk to life from flue gas!
If the siphon is not filled with water, escaping flue gas can pose a risk to life.
- ▶ Fill the siphon with water.
- ▶ Ensure that the siphon and the flue connections are sealed correctly.
- ▶ Ensure that the sealing washer with gasket is seated in the cap.

▶ Remove the siphon [3].
▶ Unscrew the cap [9] and fill the siphon with approx. 2 litres of water.

DANGER: Risk to life from flue gas!
- ▶ If the internal boiler siphon is not used, route the condensate from the flue system via a separate siphon.

▶ Fit the cap [9] with the sealing washer [8] and gasket [5].
▶ If the siphon inside the boiler is used for draining the condensate out of the flue gas system before it can reach the boiler, the sealing washer [8] must be replaced with the connection [4].

▶ Install the siphon [3].

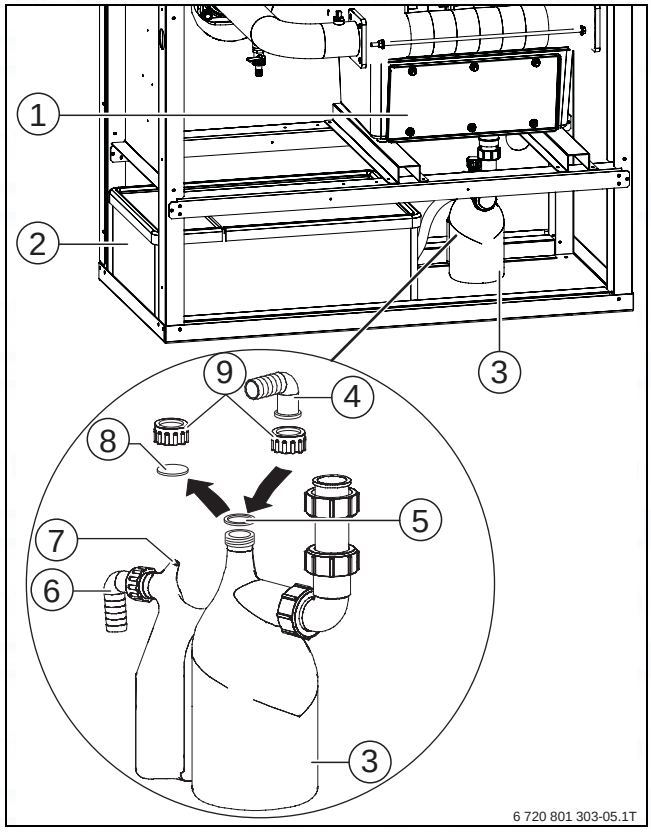

Fig. 15 Installing the condensate hose

[1] Condensation catch pan
[2] Condensate neutraliser (accessory)
[3] Siphon
[4] Connection on the siphon for draining the condensate from the boiler connection elbow or connector
[5] Gasket
[6] Siphon outlet to the condensate neutraliser and waste water
[7] Siphon vent
[8] Sealing washer
[9] Cap

Condensate may escape through the vent on the siphon [7]!
- ▶ Route the condensate drain away from the siphon with a slope.

Observe the following when draining condensate:
- ▶ It is not permitted to block or alter the condensate drain vent.
- ▶ Drain all condensate in accordance with the local regulations.
- ▶ Discharge the condensate into public waste water systems in accordance with the country-specific regulations.
- ▶ Observe regional regulations.

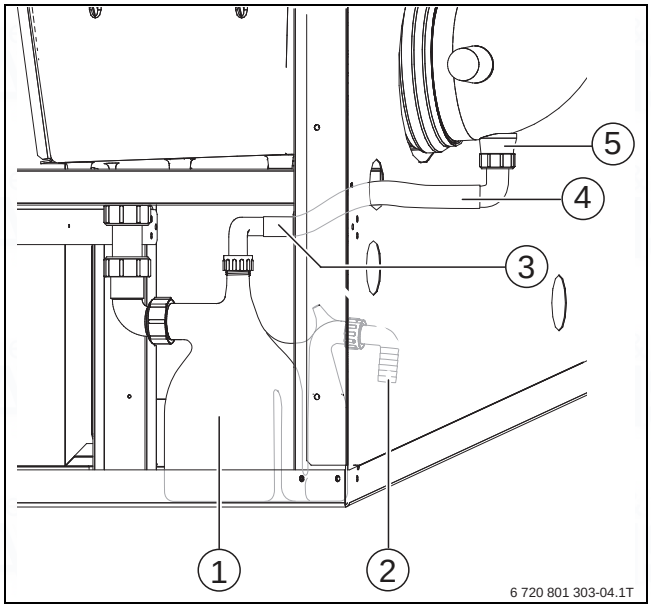

Fig. 16 Installing the condensate drain

[1] Siphon
[2] Siphon outlet to the condensate neutraliser or waste water line
[3] Connection on the siphon for draining the condensate from the boiler connection elbow or connector
[4] Hose
[5] Condensate drain (flue accessory)

CAUTION: Damage to the boiler can be caused by condensate flowing into the appliance!
- The condensate that forms in the flue must be drained away before it can reach the boiler.

The boiler connection elbow (flue accessory), the connector (flue accessory) or a connector with a condensate drain, which is provided by customer, can be connected to the boiler.

- Fit the hose to the boiler connection elbow (flue accessory).
- Fit the hose to the siphon.
  Ensure that there is a slope to the siphon, shorten the hose if necessary.

A condensate neutraliser is available as an option. In the case of boiler sizes 160 kW to 280 kW, this can be installed under the boiler casing.
- Install and maintain the condensate neutraliser (accessory) in accordance with the supplied installation instructions.

5.5.6 Fitting the connection for the expansion vessel

To safeguard single boilers, an expansion vessel (accessory) on the return pipe can be adapted in accordance with EN 12828. For this purpose a tee and double nipple (→ Fig. 17, [2] and [1], page 18) must be fitted (on site) to the return pipe.

- Remove the drain valve (→ Fig. 17, [3], page 18) on the return pipe.
- Screw in and seal the double nipple on site in place of the drain valve
- Apply sealant to the tee (on site) and screw it onto the double nipple with the opening pointing towards the back panel.
- Screw the drain valve into the tee.
- Install the pipework to the expansion vessel on site by means of the connection on the back panel.

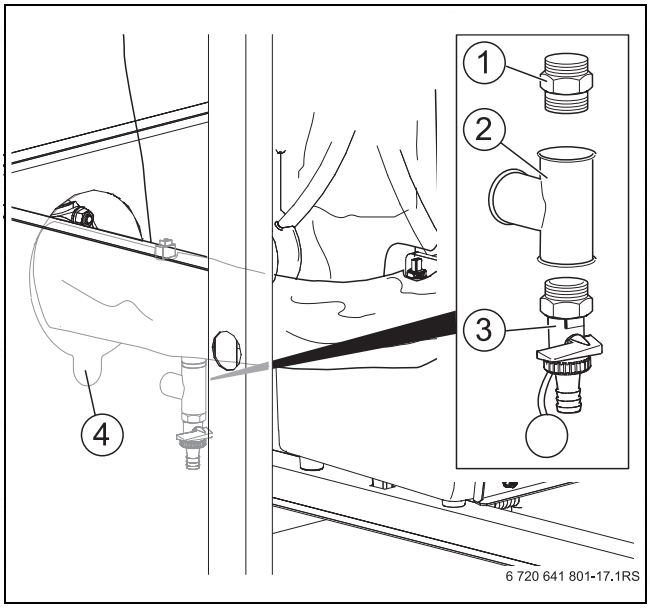

Fig. 17 Expansion vessel connection

[1] Double nipple
[2] Tee
[3] Drain valve
[4] Cut-out for expansion vessel connection (in the back panel)

- Install the expansion vessel for maintaining the system pressure in the return pipe upstream of the pump.
- Observe the installation instructions for the expansion vessel.

5.6 Filling the heating system and checking for leaks

Before commissioning, check the heating system for leaks to prevent problems during operation.

- To ensure good venting, open all heating circuits and thermostatic valves prior to filling the system.

NOTICE: System damage through boiler scaling!
- Observe the water quality requirements in accordance with the "Water Quality Operators Log" and enter the volume and quality of the fill water.

NOTICE: Risk of system damage from excess pressure when testing for leaks!
Pressure, control and safety equipment may be damaged by excessive pressure.
- Pressure test the heating system after filling with the pressure that corresponds to the safety valve response pressure.

NOTICE: System damage!
If the heating system is filled when hot, the resulting temperature stresses can cause stress cracks. The boiler will then leak.
- Only fill the heating system when cold (the flow temperature should not exceed 40 °C).
- **When the heating system is in operation, never fill it via the boiler drain & fill valve. Instead, only a WRAS approved filling method.**

CAUTION: Health risk from contaminated drinking water!
- Observe all regulations and standards applicable in your country regarding the prevention of drinking water contamination.
- In Europe, observe standard EN 1717.

- Open the caps of all the automatic air vent valves.
- Use an approved WRAS filling method that is suitable for the fluid category that the system represents.

NOTICE: most commercial sealed heating systems will be classed as fluid category 4, in line with the water regulations and will need an appropriate class of back flow prevention device.

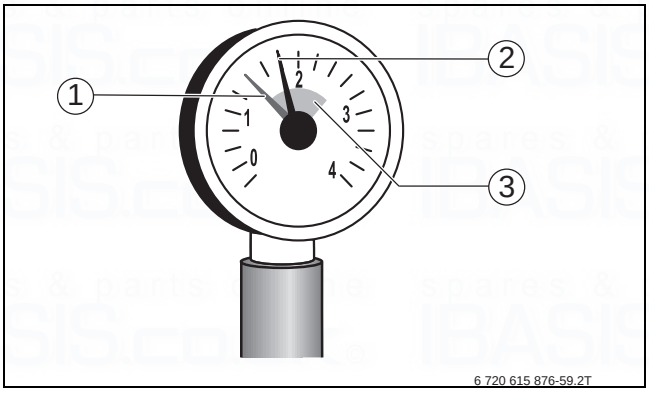

Fig. 18 Pressure gauge for sealed systems

[1] Red needle
[2] Pressure gauge needle
[3] Green marking

- Fill the heating system to the required cold fill pressure. Setup any auto fill equipment to the required system pressure.

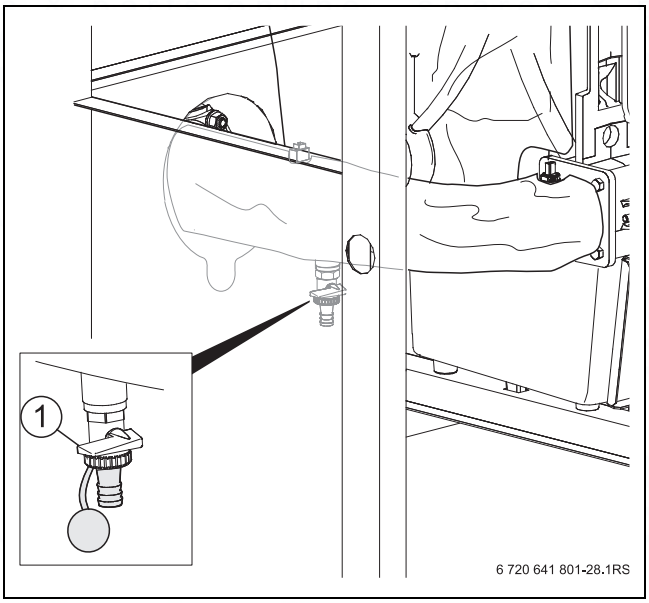

Fig. 19 Drain and fill valve on the return

[1] Drain & fill valve

- Carry out a leak test in accordance with local regulations.
- Check the connections and pipework for leaks.
- Vent the heating system via the radiator air vent valves.
- Top up with water if the test pressure drops as a result of venting the system.
- Remove any temporary filling hose.
- Once the heating system has been tested for leaks and no leaks have been found, set the correct operating pressure.

5.7 Establishing the fuel supply

DANGER: Risk to life from explosion of flammable gases!
- Work on gas components must only be carried out by an authorised gas fitter.
- Observe all local regulations relating to the gas connection.
- Join all gas connections with an approved sealant.

WARNING: Risk of system damage due to contamination in the gas line!
The valve test system may be impaired by contamination in the gas line.
- In the case of boilers with an integrated valve test system (200 to 280 kW), a gas filter with a pore size of ≤ 50 µm (e.g. DIN 3386) must be installed in the gas line in close proximity to the boiler in accordance with local regulations.
- The gas filter pressure drop should not exceed a maximum of 70 Pa (0.7 mbar) to ensure an adequate reserve for the rest of the gas line and to ensure compliance with local regulations (max. gas line pressure drop 300 Pa = 3 mbar in accordance with TRGI 2008).

- Install a gas isolator in the gas line. When doing so, prevent the gas line inside the boiler from becoming twisted.

A thermal shut-off device (TAE) must be installed in accordance with local regulations if required.
We also recommend the installation of a gas filter and expansion joint in the gas line in accordance with local regulations.

- Connect an expansion joint (recommended) to the gas isolator.
- Connect the gas line without tension to the gas connection or the expansion joint.
- Fasten the gas line on site by means of brackets in such a way, that there is no load on the gas connection.
- Close the gas isolator.

5.8 Making the electrical connection

The boiler can only function fully with an installed control unit.

When connecting electrical components, also observe the connection diagram and instructions of the relevant product.

Ensure that a standard-compliant isolator (contact separation > 3 mm) for isolating the boiler from the power supply across all poles is installed.

- ▶ Install such an isolator if none is present.

NOTICE: System damage through incorrect installation!
Observe the following points regarding the electrical connection:

- ▶ Electrical work on heating systems must only be carried out by qualified electricians.
- ▶ If you do not possess an appropriate qualification, ask a qualified electrician to make the electrical connection.
- ▶ Observe all local regulations!

DANGER: Risk to life from electric shock when the appliance is open!

- ▶ Before opening the boiler:
  Disconnect the heating system from the power supply by means of the emergency stop switch or the relevant circuit breaker/fuse in the main fuse board.
  It is not enough to switch off the control unit.
- ▶ Safeguard the heating system against unintentional reconnection.

5.8.1 Installing the control unit

- ▶ Insert the push-in hooks of the control unit into the oval holes of the front boiler cover.
- ▶ Push the control unit towards the outside edge of the boiler.
- ▶ By pressing the control unit, allow the elastic hooks of the control unit to latch into the openings provided.

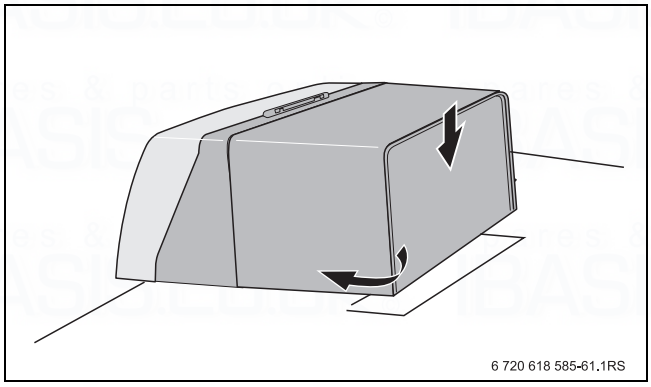

Fig. 20 Fitting the control unit (Logamatic MC10)

5.8.2 Mains power connection and connections of additional assemblies

Establish a permanent mains power connection in accordance with local regulations.

You can install up to four modules (accessories) in the boiler in the position shown in → Fig. 21.

- ▶ When installing a module, observe the relevant documentation.

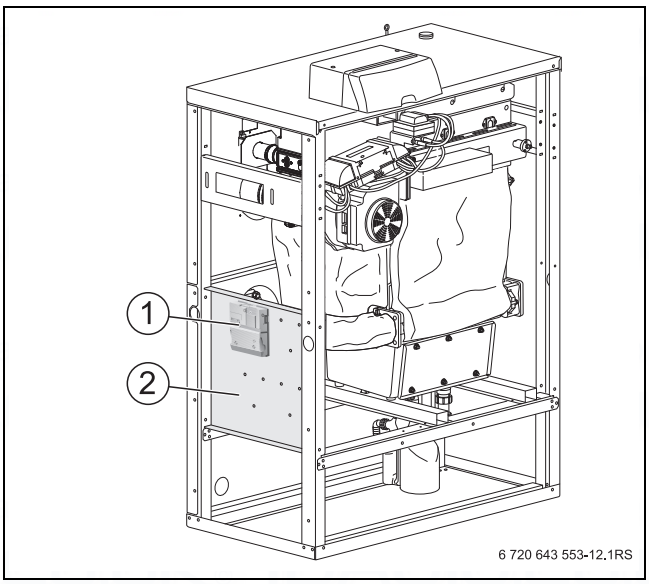

Fig. 21 Fitting modules

[1] Module (accessory)
[2] Mounting plate

- ▶ Release two screws on the control unit cover and remove it.

DANGER: Risk to life from electric shock!
Incorrectly connected cables can result in faulty operation and possible dangerous consequences.

- ▶ When establishing the electrical connections, observe the connection diagram for the MC10 and the installation instructions for the MC10 (included within the scope of delivery of the control unit).

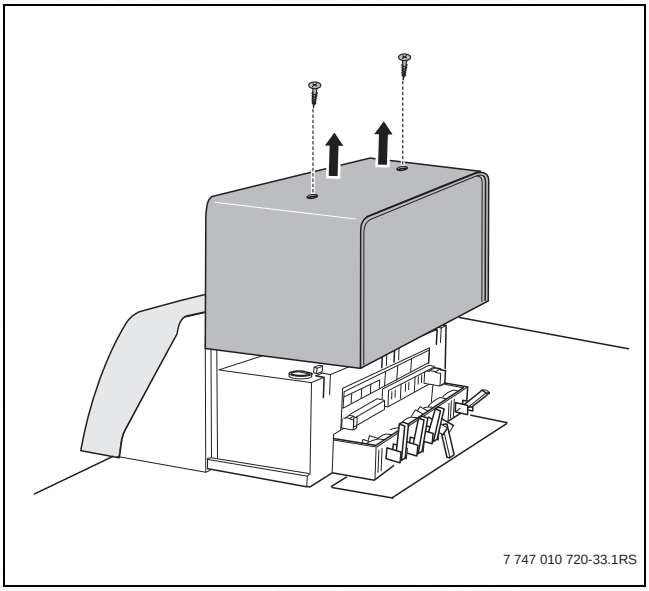

Fig. 22 Removing the cover

DANGER: Risk of fire due to hot boiler components!
Hot boiler components may damage the cables.

- ▶ Ensure that all cables are laid in the cable routings provided or on the thermal insulation of the boiler.

NOTICE: System damage through incorrect control!

- ▶ Route low and ultra low voltage cables separately inside the cable ducts.

- ▶ Feed all cables through the cable routing to the control unit and connect them in accordance with the connection diagram.
- ▶ Secure all cables with cable clips (included within the scope of delivery).

1. Insert the cable clip with cable from above into the slot in the clip frame.
2. Slide the cable clip downwards.
3. Press against it.
4. Flip the lever up.

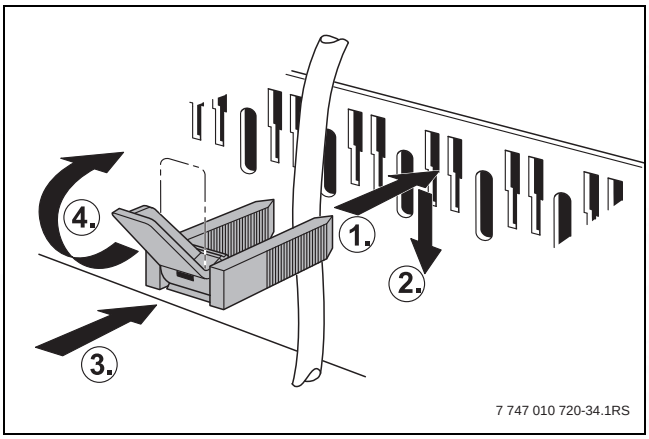

Fig. 23 Securing cables with cable clips

5.8.3 Fitting the cover

- ▶ Push the control unit cover down into the guide rails.
- ▶ Secure the control unit cover with 2 screws.

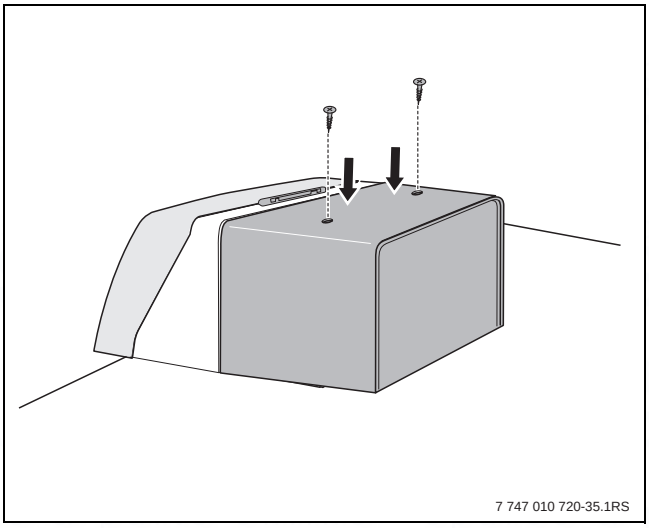

Fig. 24 Fitting the cover

5.9 Levelling the boiler vertically

The boiler must be vertically plumb to enable the side panels to be hooked in.

- ▶ Undo nuts [2].
- ▶ To plumb the boiler vertically using a spirit level [3], wind screws [1] in or out, as required.
- ▶ Tighten the nuts when the boiler is plumb.

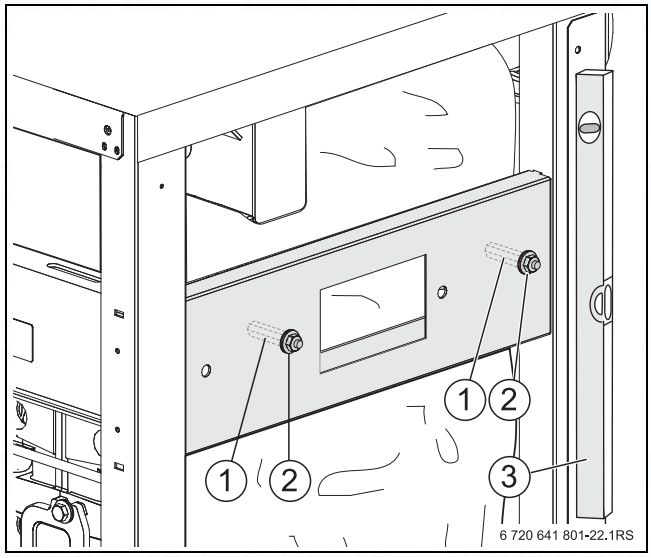

Fig. 25 Levelling the boiler vertically

[1] Screws
[2] Nuts
[3] Spirit level

6 Commissioning

This chapter describes commissioning using the standard control unit module.

- ▶ While performing the work described below, complete the commissioning report (→ chapter 6.23).

NOTICE: Boiler damage through excessive dust and dirt contamination in open flue mode!
Strong dust and dirt contamination can occur, for example, due to building work in the installation room.
- ▶ During building work, operate the boiler in Room Sealed mode.

NOTICE: Risk of boiler damage from contaminated combustion air!
- ▶ Never use chlorinated cleaning agents or halogenated hydrocarbons (as contained in spray cans, solvents, cleaning agents, paints and adhesives, for example).
- ▶ Never store or use such materials in the boiler room.
- ▶ Avoid very dusty atmospheres (building dust).

- ▶ A burner contaminated during building work must be cleaned before commissioning.
- ▶ Check the flue and combustion air pipework (with Room SealedRoom Sealed operation) and the vents for combustion air supply and ventilation (→ chapter 3.4, page 11).

6.1 Checking the operating pressure

The boiler must not be directly connected to open vented heating systems, sealed systems only are permitted. In the case of open vented systems, the boiler circuit must be separated via a correctly sized plate heat exchanger.

- Prior to commissioning, check the operating pressure of the heating system on the water side and adjust if required.

NOTICE: System damage through boiler scaling!
- Observe the details contained in the "Water Quality Operator's Log".

- Set the red needle [1] of the pressure gauge to the required operating pressure of at least **1 bar**.

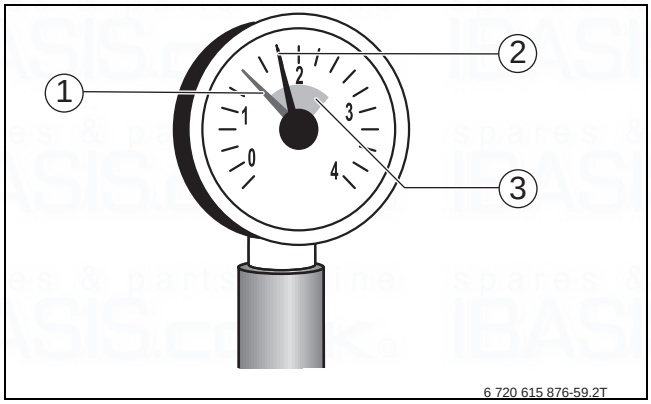

Fig. 26 Pressure gauge for sealed systems

[1] Red needle
[2] Pressure gauge needle
[3] Green marking

CAUTION: Health risk from contaminated drinking water!
- Observe all regulations and standards applicable in your country regarding the prevention of drinking water contamination.
- In Europe, observe standard EN 1717.

- Top up heating water or drain off water via the on-site WRAS approved fill method, until the required operating pressure has been reached.
- Vent the heating system during the filling process via the air vent valves on the radiators.

6.2 Recording gas parameters

Request the gas parameters (Wobbe index and net calorific value) from your gas supplier and record these in the commissioning report (→ chapter 6.23, page 32).

If the boiler has to be replaced in existing systems:
- Agree with the gas supplier, that the rated gas pressure is to be maintained in accordance with table 8 (→ page 10) (country-specific gas category and connection pressures).

6.3 Checking the system equipment

Depending on the particular specification delivered, the burner is set ready for use with a particular gas group or sub-group of these. This gas group or sub-group must be available in the area supplied.

Only put burners into operation, if they have the correct gas restrictors.

- Enquire with the relevant gas supplier, which gas group is supplied.
- Check whether the actual gas group is the same as that stated on the type plate.

Country:	Gas group, reference gas	Factory settings
AT, BA, BE, BG, BY, CH, CZ, DE, DK, EE, ES, FR, GB, GR, HR, HU, IE, IT, KZ, LT, LU, LV, NO, PT, PL, RO, RU, SE, SI, SK, UA	Natural gas group H (G20) Natural gas group E (G20) Sub-group Es of Natural gas group E (G20)	Factory-set ready for use on delivery. The gas valve is set and sealed. Upper Wobbe index for 15 °C, 1013 mbar: • Set to 14.1 kWh/m^3 • Can be used from 11.4 to 15.2 kWh/m^3 Upper Wobbe index for 0 °C, 1013 mbar: • Set to 14.9 kWh/m^3 • Can be used from 12.0 to 16.1 kWh/m^3 (Natural gas group "H in accordance with DVGW Code of Practice G 260" falls within Natural gas group "E in accordance with DIN EN 437")
DE	Natural gas group LL	Factory-set ready for use on delivery. The gas valve is set and sealed. Upper Wobbe index for 15 °C, 1013 mbar: • Set to 12.1 kWh/m^3 • Can be used from 11.4 to 12.4 kWh/m^3 Upper Wobbe index for 0 °C, 1013 mbar: • Set to 12.8 kWh/m^3 • Can be used from 12.0 to 13.1 kWh/m^3 (Natural gas group "L according to DVGW Code of Practice G 260" falls within natural gas group "LL according to DIN EN 437")
NL	Natural gas group L (G25)	Factory-set ready for use on delivery. The gas valve is set and sealed. Upper Wobbe index for 15 °C, 1013 mbar: • Set to 11.5 kWh/m^3 • Can be used from 10.9 to 12.4 kWh/m^3 Upper Wobbe index for 0 °C, 1013 mbar: • Set to 12.2 kWh/m^3 • Can be used from 11.5 to 13.1 kWh/m^3

Table 12 Factory settings

6.4 Checking for leaks

All new pipe sections on the gas side must be checked for external leaks before commissioning

DANGER: Risk of explosion!
If there are leaks in the gas lines and gas connections, there is a danger of explosion.
- ▶ Carry out an appropriate leak test with a foaming agent.

NOTICE: System damage!
- ▶ Prior to checking for leaks, cover the areas at risk, e.g. the internal water pressure sensor and the return temperature sensor at the boiler return.
- ▶ Never spray or let leak detection agent drip onto cable entries, plugs or electrical cables/leads.

- ▶ Check the new pipe section up to the joint immediately at the gas valve for external leaks.
  The test pressure on the inlet to the gas valve must be no more than 150 mbar.

If a leak is found during the leak test, a search for leaks must be carried out on all connections using a foaming agent. The agent must be approved for gas leak testing.
- ▶ Never allow the agent to come into contact with power cables.

- ▶ Confirm in the commissioning report that the leak test has been carried out (→ chapter 6.23).

6.5 Gas type conversion

If you discover that the boiler has been ordered for the wrong gas type, convert it to the correct gas type, and update the type plate accordingly.

6.5.1 Conversion for boiler size 90 and 120 kW

Conversion to a different gas type is made by exchanging the gas restrictor.

Use only the gas restrictors listed in table 13.

Boiler size	Gas type	Diameter of gas restrictor [mm]
90/120 kW	Natural gas E, H, Es (Wobbe index 14.9 kWh/m^3) 1)	15.7
	Natural gas LL- DE (Wobbe index 12.8 kWh/m^3) 1)	15.0
	Natural gas L, Ei - NL, BE, FR (Wobbe index 12.2 kWh/m^3) 1)	14.8

Table 13 Gas restrictors for conversion to gas type 90/120 kW

1) Upper Wobbe index for 0, 1013 mbar °C

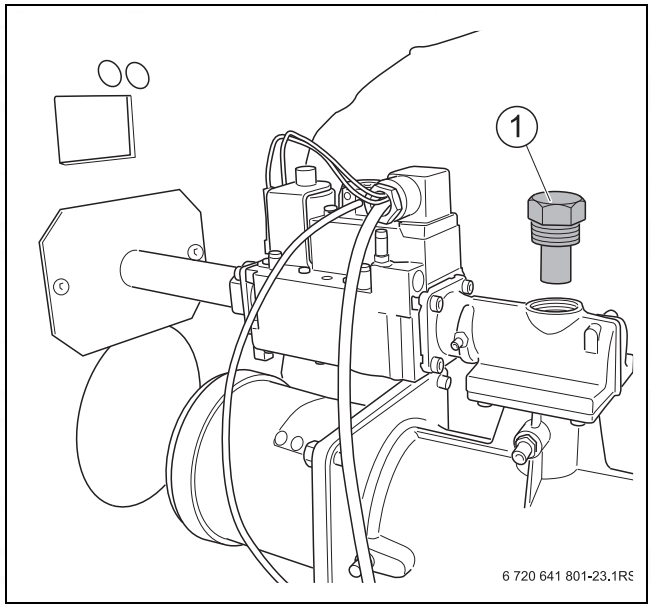

Fig. 27 Replacing the gas restrictor (boiler size 90/120 kW)

[1] Gas restrictor

6.5.2 Conversion for boiler size 160 kW

The boiler size 160 kW is not equipped with a gas restrictor. Consequently, the conversion is achieved via the full load adjusting screw.

Conversion from gas type E, H, Es to gas type LL, L, Ei:
- ▶ Rotate the full-load adjusting screw [1] one half turn anti-clockwise.

Conversion from gas type LL, L, Ei to gas type E, H, Es:
- ▶ Rotate the full-load adjusting screw [1] one half turn clockwise.

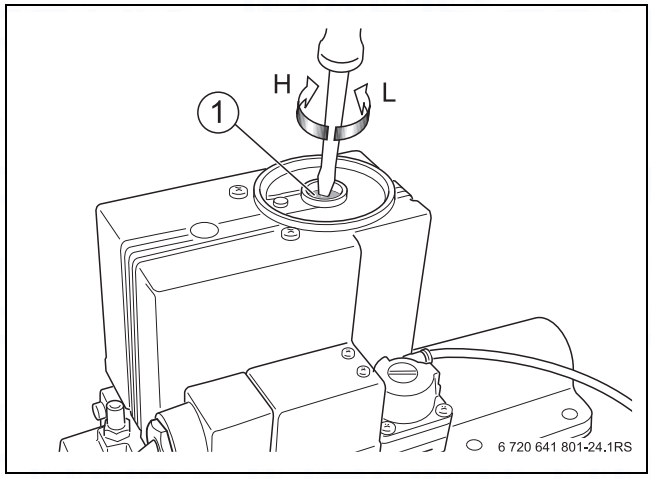

Fig. 28 Conversion to a different gas type (boiler size 160 kW)

[1] Full load adjusting screw

6.5.3 Conversion for boiler sizes from 200 to 280 kW

Conversion from gas type E, H, Es to gas type LL, L, Ei:
- ▶ Increase the value of adjusting screw V (→ Fig. 29, [2]) by 0.5, e.g. from a setting of 1.1 to 1.6.

Conversion from gas type LL, L, Ei to gas type E, H, Es:
- ▶ Decrease the value of adjusting screw V (→ Fig. 29 [2]) by 0.5, e.g. from a setting of 1.6 to 1.1.

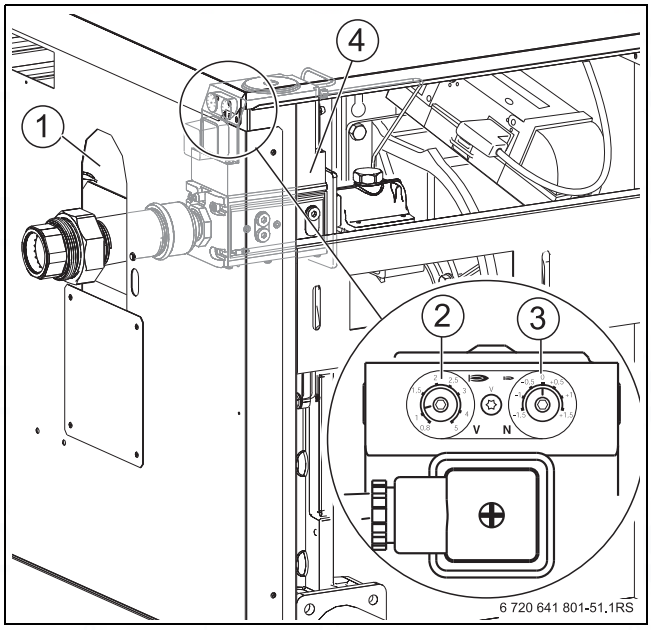

Fig. 29 Conversion to a different gas type (boiler size 200 to 280 kW)

[1] Apertures for adjusting the gas train
[2] Adjusting screw V (sealed)
[3] Adjusting screw N (sealed)
[4] Gas train

6.5.4 Updating the type plate

- Affix label [2] (supplied with the boiler) in the respective area over type plate [1] (on the side panel).

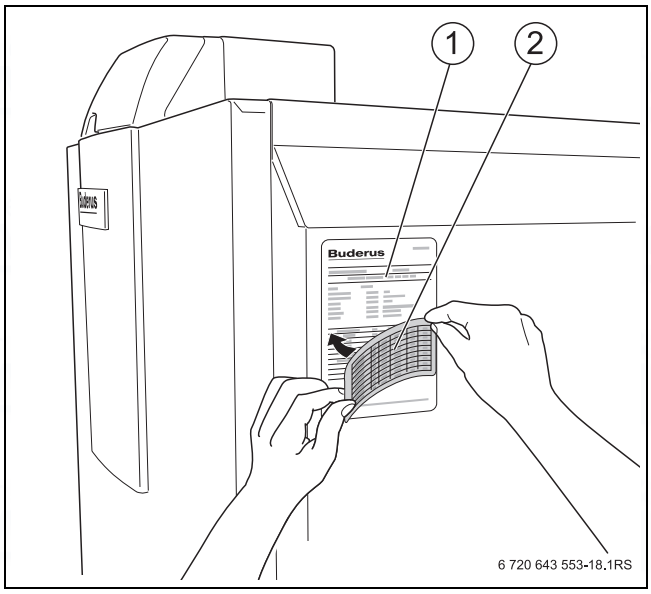

Fig. 30 Updating the type plate

[1] Type plate
[2] Label (gas values)

6.6 Venting the gas line

- Undo the locking screw of the pressure test port for the gas supply pressure and venting (→ Fig. 31, 32, 33, [1], page 24) by two turns, and then push on the hose.
- Slowly open the gas isolator.
- Flare off escaping gas via an appropriate method. Pull off the hose when no more air is expelled, and then tighten the locking screw.
- Close the gas isolator.

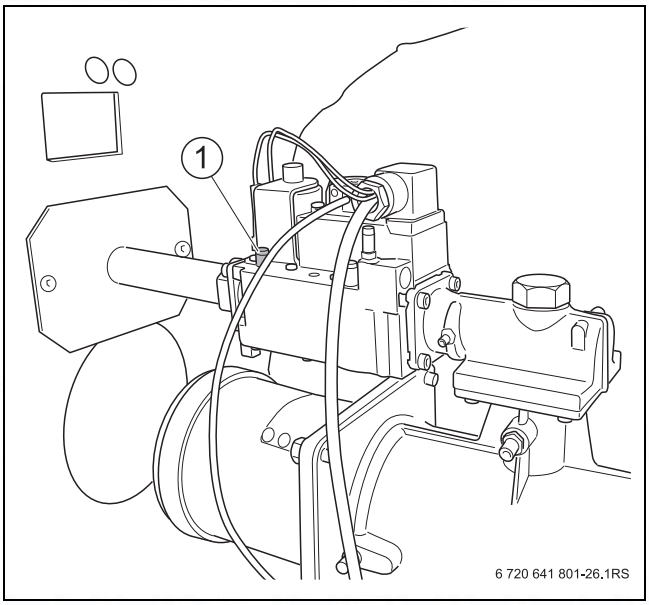

Fig. 31 Venting the gas line (boiler size 90/120 kW)

[1] Pressure test port for measuring the gas supply pressure and for venting

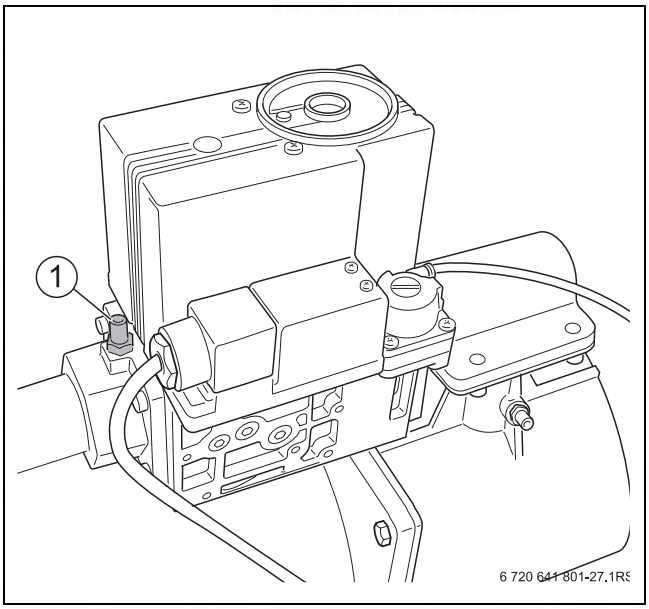

Fig. 32 Venting the gas line (boiler size 160 kW)

[1] Pressure test port for measuring the gas supply pressure and for venting

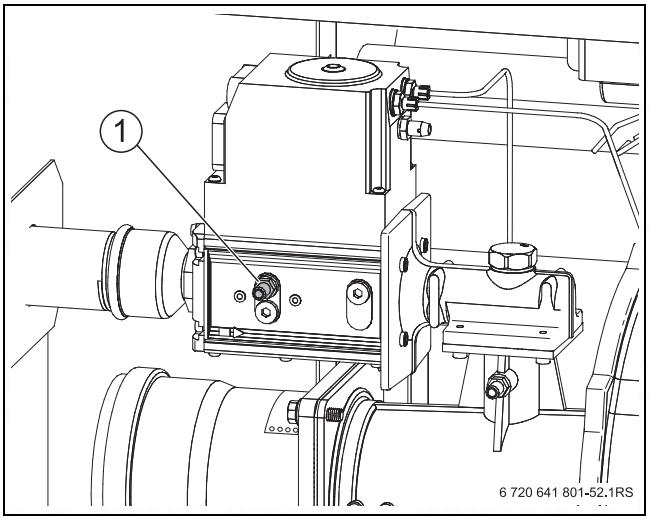

Fig. 33 Venting the gas line (boiler size 200 to 280 kW)

[1] Pressure test port for measuring the gas supply pressure and for venting

6.7 Checking the ventilation and extract air apertures and the flue connection

- Check whether the apertures for ventilation and extract air comply with locally applicable regulations or those of your gas supply utility. Have any faults removed immediately.

DANGER: Risk to life through poisoning!
An insufficient supply of air can result in dangerous escape of flue gas.

- Never block ventilation and extract air apertures or reduce their size.
- The boiler must not be operated, unless you immediately remedy the fault.
- Inform the system user in writing of the problem and associated risk.

- Check whether the flue connection complies with the applicable requirements (→ chapter 3.4, page 11).
- Have any faults removed immediately.

6.8 Check the ventilation air diaphragm

- Check whether ventilation air diaphragm [1] is fitted to air inlet connector [2] and abuts the pipe.
- Check that the ventilation air diaphragm on the air inlet connector is flexible and does not stick to the pipe.

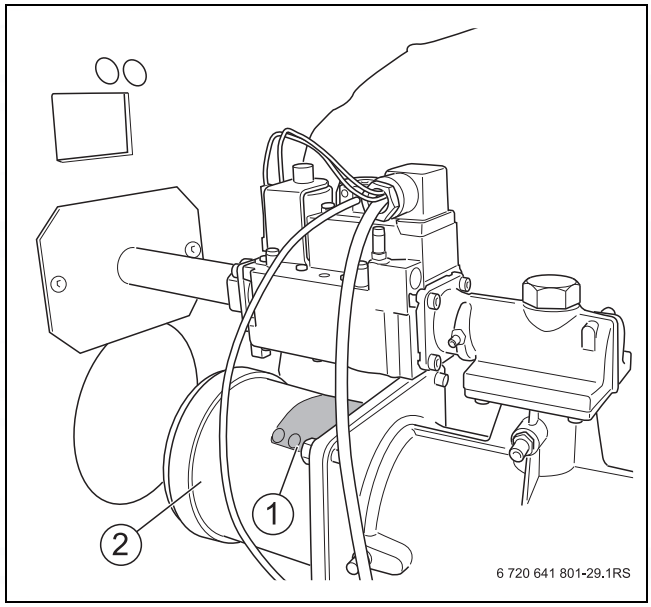

Fig. 34 Check the ventilation air diaphragm

[1] Ventilation air membrane
[2] Air inlet connector

6.9 Preparing the heating system for operation

- Open the main shut-off valve or gas tap.
- Switch ON the heating system emergency stop switch (if installed) and/or the corresponding main circuit breaker.

6.10 Switching on the boiler at the BC10

- Set the rotary selector for “maximum boiler temperature” and the rotary selector for “DHW temperature setting” to 0.
  This ensures that the burner will not start yet (there is no heat demand).
- Set the ON/OFF switch on the basic controller to position “1”.
  The entire heating system is switched ON. During commissioning “–” briefly flashes on the display, followed immediately by fault display “4A” - “700”. Fault display “4A”-“700” appears, since the burner is supplied in fault setting.
- Wait approx. 1 minute to enable the EMS connection to the RC35 user interface (available separately) to be established.

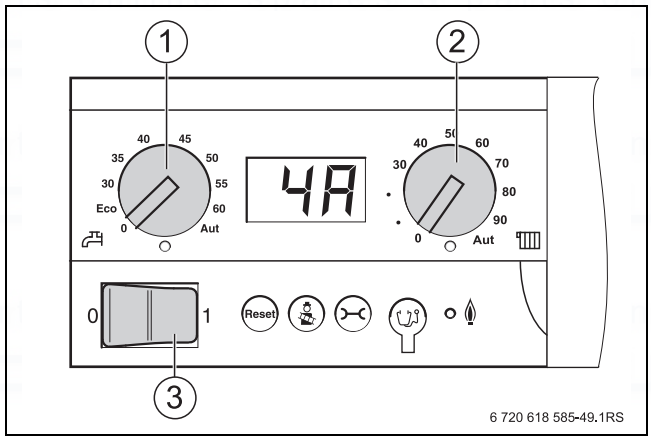

Fig. 35 Logamatic BC10 basic controller

[1] Rotary selector for “DHW temperature setting”
[2] Rotary selector for“ Maximum boiler temperature”
[3] On/Off switch

- Press “Reset” on the BC10. The status display on the BC10 illuminates and the display shows the current boiler water temperature in °C.

If fault display "A11" appears, the date and time must be set on the RC35 user interface. Only then is the current boiler temperature displayed.

Before continuing with further commissioning steps, set the correct parameters on the RC35 user interface. The DHW heating configuration (heating pump and cylinder primary pump) must be set correctly, to ensure that the heating system functions faultlessly. With this in mind, read the installation and maintenance instructions for the RC35 user interface carefully.

When using the Logamatic 4000 control system, proceed as follows with the commissioning:
- ▶ Switch off the Logamatic 4000 control unit.
- ▶ Install the RC35 user interface.

6.11 Carrying out a flue gas test

The key is used by the installer for the flue gas test.

The heating controls operates for 30 minutes at a higher flow temperature (ensure that heat is drawn off during this time). During the flue gas test the decimal point illuminates in the status display.

- ▶ Press the key, until the decimal point in the status display illuminates (at least 2 seconds).
- ▶ Carry out the flue gas test.
- ▶ To cancel the flue gas test, press the key again.

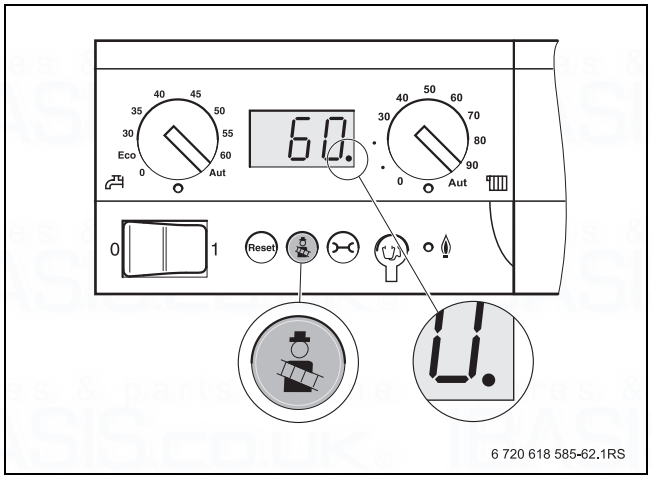

Fig. 36 Calling up the flue gas test

6.12 Calling up service menus on the RC35 user interface and displaying monitor data

- ▶ In order to open the **SERVICEMENÜ**, press the Menu/OK + Info + keys simultaneously.
- ▶ Turn the rotary selector anti-clockwise, until **Diagnosis** is selected (highlighted by ▶).

```
SERVICE MENU
 quick operation
 settings
▶diagnosis
 servicing
```

- ▶ In order to open the **SERVICE/DIAGNOSIS** menu, press the Menu/OK key.
- ▶ Turn the rotary selector anti-clockwise, until the **Monitor value** is selected (highlighted with ▶).

```
SERVICE/DIAGNOSIS
 function test
▶monitor value
 diagnosis
 servicing
```

- ▶ Turn the rotary selector anti-clockwise, until the **boiler / burner** is selected (highlighted with ▶).
- ▶ In order to open the **DIAGNOSIS/MON. VALUE** menu, press the Menu/OK key.

```
DIAGNOSIS/MON. VALUE
▶boiler / burner
 domestic hot water
 heating circuit 1
 bus users
```

- ▶ In order to open the **BOILER/BURNER** menu, press the Menu/OK key. The monitor readings are displayed as a list. Any further readings are displayed by turning the selector.

The current burner output (set/actual) and the ionisation current can be read in these menus.

6.13 Checking and adjusting the CO_2 setting under full load

Only check or correct the CO_2 content, if there is a burner output of ≥ 70% or more.

- ▶ Activate flue gas test (→ chapter 6.11).
- ▶ Read the load at the RC35 user interface or via the service keys.
- ▶ Wait until 70% burner output is achieved.

NOTICE: Material damage if there is burner operation with too high a CO_2 content!
Permanent operation with excessive CO_2 content can cause damage to the burner rod and burner.
- ▶ Observe the CO_2 contents for full load and partial load, which are given in the technical documentation.

Applies for **Denmark** :
The burner setting in Denmark is made via the O_2 content of the flue gas.
- ▶ The O_2 contents (natural gas DK, CO2 nominal=12.0 vol. – %), which correspond to the given CO_2 setting values, should be taken from chapter 11.5, page 61.

Gas valve for boiler size 90/120 kW
- ▶ Check the CO_2 content.
  Insert the test probe into the core flow through the measurement port in the flue pipe.

Only for natural gas LL - DE:
- ▶ In the case of CO_2 contents below 8,5%, convert to a gas restrictor for a low Wobbe index (→ table 14; exchanging gas restrictor, → Fig. 27, page 23).
- ▶ If the gas restrictor for a low Wobbe index is being used and the CO_2 contents are above 9,8%, convert to a gas restrictor from Natural gas LL-DE delivered condition (table 14; exchanging gas restrictor, → Fig. 27, page 23).

Only for design type C63:

- ▶ If the supply air infeed is designed as an annular gap around the flue pipe, check the CO_2 content in the combustion air at the measurement port on site.
  Values above 0% indicate faults or leaks in the flue gas routing.
- ▶ Identify and eliminate the cause.

Upper Wobbe index for 0 °C, 1013 mbar [kWh/m³]	Gas type	Ø Gas restrictor in the delivered condition [mm]	Ø Gas restrictor for lower Wobbe index [mm]
12.0 - 16.1	Natural gas E, H, Es	15.7	
12.0 - 13.1	Natural gas LL - DE	15.0	
10.0 - 12.2	Natural gas LL - DE		14.5
11.5 - 13.1	Natural gas L, Ei (G25) - NL, BE, FR	14.8	

Table 14 Gas restrictors 90/120 kW

Gas valve for boiler size 160 kW

- ▶ Check the CO_2 content.
  Insert the test probe into the core flow through the measurement port in the flue pipe.
- ▶ At CO_2 values below 8,5% or in excess of 9,4%, set the full load adjusting screw [1] to 9,1%.
  - – Turning clockwise will reduce the CO_2 content.
  - – Turning anti-clockwise increases the CO_2 content.

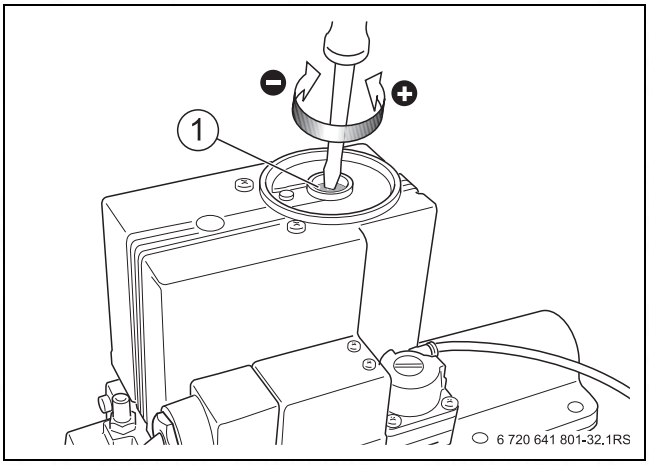

Fig. 37 Correct the CO_2 content under full load (boiler size 160 kW)

[1] Full load adjusting screw

Only for design type C63:

- ▶ If the supply air infeed is designed as an annular gap around the flue pipe, check the CO_2 content in the combustion air at the measurement port on site.
  Values above 0% indicate faults or leaks in the flue gas routing.
- ▶ Identify and eliminate the cause.

Gas valve for boiler size 200 to 280 kW

- ▶ Check the CO_2-content.
  Hold the test probe into the core flow through the measurement port in the flue pipe.
  If there are values below 8,5% or more than 9,4%, make the setting correction by means of the adjusting screw V.
- ▶ Set the CO_2 value to 9,1%.
  - – Turning clockwise will increase the CO_2 content.
  - – Turning anti-clockwise reduces the CO_2 content.

Only for design type C63:

- ▶ If the supply air infeed is designed as an annular gap around the flue pipe, check the CO_2 content in the combustion air at the measurement port on site.
  Values above 0% indicate faults or leaks in the flue gas routing.
- ▶ Identify and eliminate the cause.

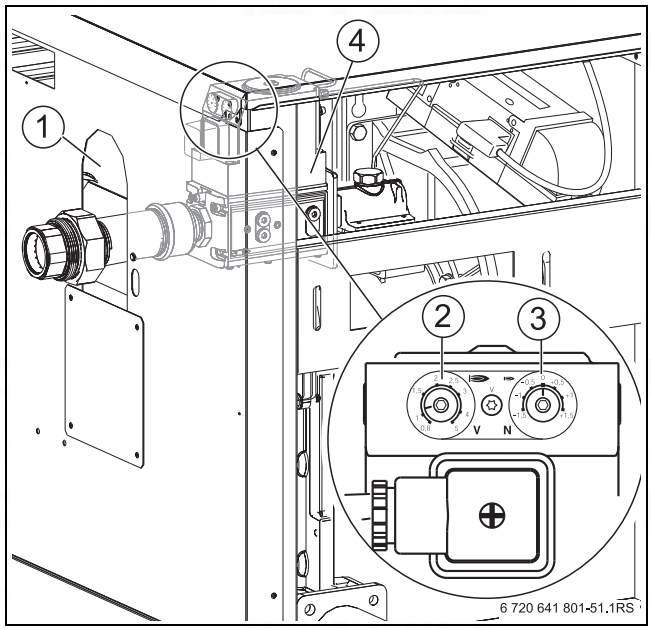

Fig. 38 Correct the CO_2 content under full load (boiler size 200 to 280 kW)

[1] Apertures for adjusting the gas train
[2] Adjusting screw V (sealed)
[3] Adjusting screw N (sealed)
[4] Gas train

6.14 Check and adjust the CO_2 setting at partial load, then perform the final check and enter the values in the commissioning report

- ▶ Press the key, until the decimal point in the status display **illuminates** (at least 2 seconds).
- ▶ Press and keys simultaneously for approx. 5 seconds.

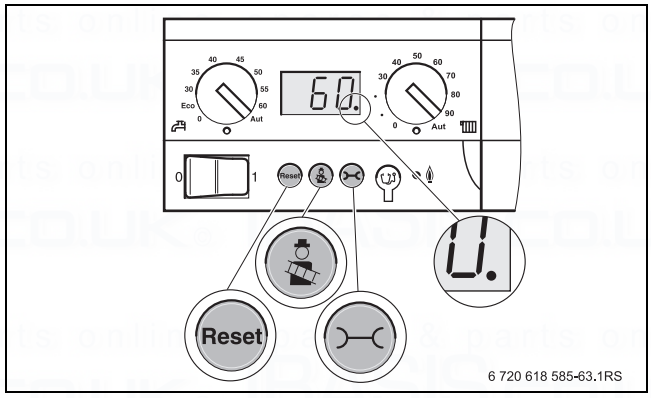

Fig. 39 Calling up partial load on the BC10

With default setting the L - - display shows.

- ▶ In order to reduce the boiler output in percent to the minimum modulation ranges of the varios boiler sizes, press the Reset key.
  - – L33 for boiler size 90 kW
  - – L25 for boiler size 120 and 160 kW
  - – L30 for boiler size 200 to 280 kW
  These values represent the minimum modulation ranges for the various boiler sizes.
- ▶ Read the load at the RC35 user interface or via the service keys.

Gas valve for boiler size 90/120 kW

- ▶ Wait until the minimum modulation range for the corresponding boiler size (90 kW or 120 kW) has been reached.
- ▶ Check the CO_2 content.
  Insert the test probe into the core flow through the measurement port in the flue pipe.
- ▶ In the case of CO_2 values below 9,0% or more than 9,6%, set the low load adjusting screw [1] to 9,3%.
  - – Turning clockwise will increase the CO_2 content.
  - – Turning anti-clockwise reduces the CO_2 content.

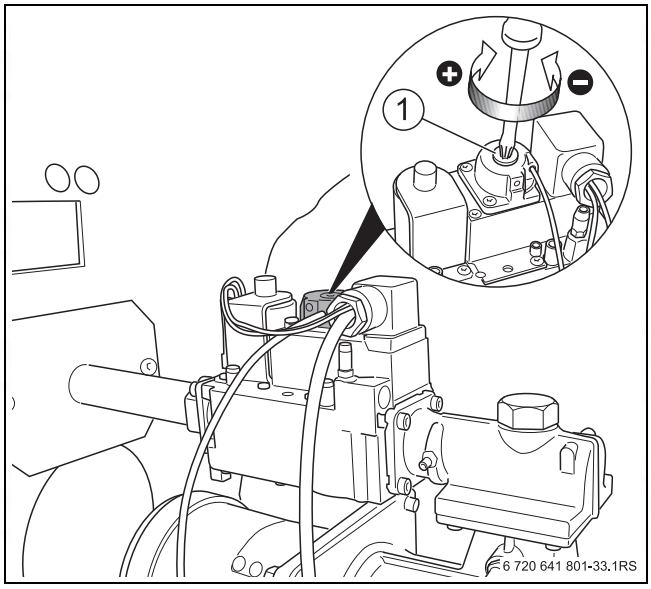

Fig. 40 Correct the CO_2 content under partial load (boiler size 90/120 kW)

[1] Partial load adjusting screw

- ▶ Check the CO_2 content at full load and partial load again, and then enter the value in the commissioning report (→ chapter 6.23, page 32).

Gas valve for boiler size 160 kW

- ▶ Wait until 25 % burner output is achieved.
- ▶ Check the CO_2 content.
  Insert the test probe into the core flow through the measurement port in the flue pipe.
- ▶ In the case of CO_2 values below 9,0% or more than 9,6%, set the low load adjusting screw [1] to 9,3%.
  - – Turning clockwise will increase the CO_2 content.
  - – Turning anti-clockwise reduces the CO_2 content.

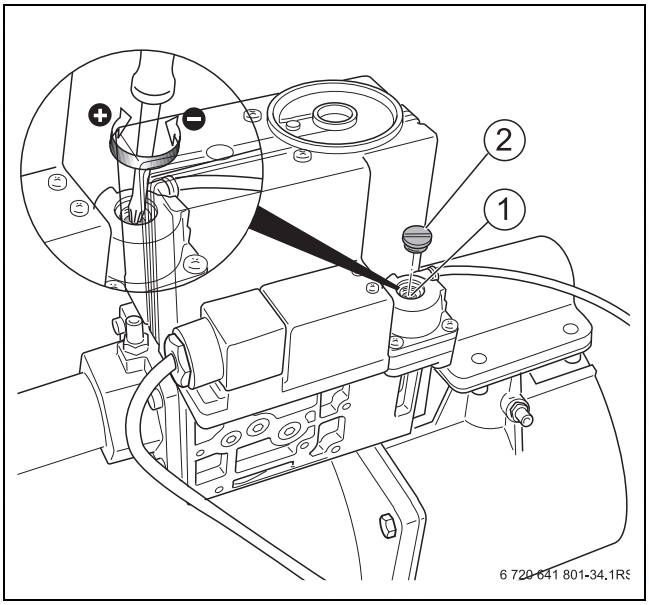

Fig. 41 Correct the CO_2 content under partial load (boiler size 160 kW)

[1] Partial load adjusting screw
[2] Covering screw

- ▶ Check the CO_2 content at full load and partial load again, and then enter the value in the commissioning report (→ chapter 6.23, page 32).

Gas valve for boiler size 200 to 280 kW

- ▶ Wait until 30% burner output is achieved.
- ▶ Check the CO_2 content.
  Insert the test probe into the core flow through the measurement port in the flue pipe.
- ▶ In the case of CO_2 values below 9,0% or more than 9,6%, set the adjusting screw N [3] to 9,3%.
  - – Turning clockwise will increase the CO_2 content.
  - – Turning anti-clockwise reduces the CO_2 content.

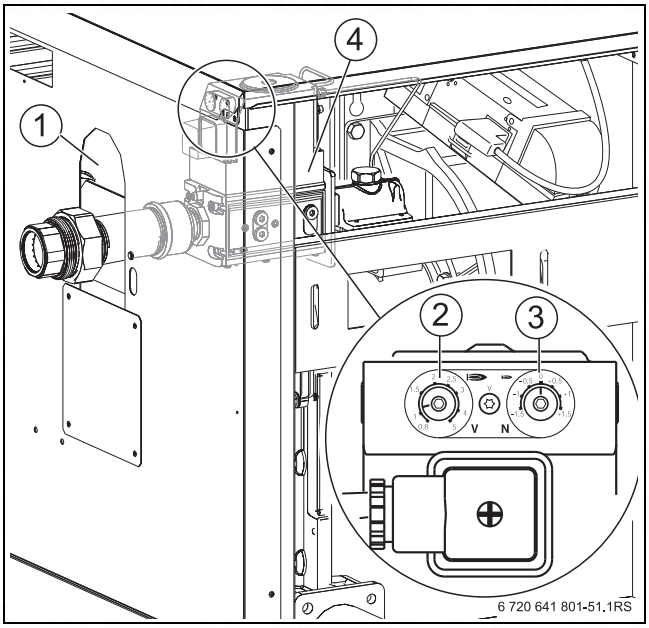

Fig. 42 Correct the CO_2 content under partial load (boiler size 200 to 280 kW)

[1] Apertures for adjusting the gas train
[2] Adjusting screw V (sealed)
[3] Adjusting screw N (sealed)
[4] Gas train

- Check the CO_2 content at full load, 60% load and partial load.
- If the CO_2 content at 60% load is more than 9,7%, the setting must be repeated with 70% load, beginning at full load.
- Enter the recorded values in the commissioning log (→ chapter 6.23, page 32).

6.15 Switching the status display on the BC 10 to show the boiler temperature status

- Press the key to change to the next status display. The current operating pressure P1.7 is displayed.
- Press the key to change to the next status display. Operating status 0Y (fault code) is displayed.
- Press the key to change to the next status display. The boiler temperature is displayed.

6.16 Returning to operating mode from the flue gas test

- Press the key to terminate the flue gas test.
- Return to the operating mode at the RC35 user interface.
- Close the flap on the RC35 user interface.
- If the boiler is intended to be operated with the Logamatic 4000 control system, remove the RC35 user interface again. Switch on the Logamatic 4000 control system.

6.17 Recording measured values

- Take the following readings at a test point in the connector and enter them in the commissioning log (→ chapter 6.23, page 32):
  - Feed pressure
  - Flue gas temperature t_A
  - Air temperature t_L
  - Net flue gas temperature t_A - t_L
  - Carbon dioxide content (CO_2) or oxygen content (O_2)
  - CO content

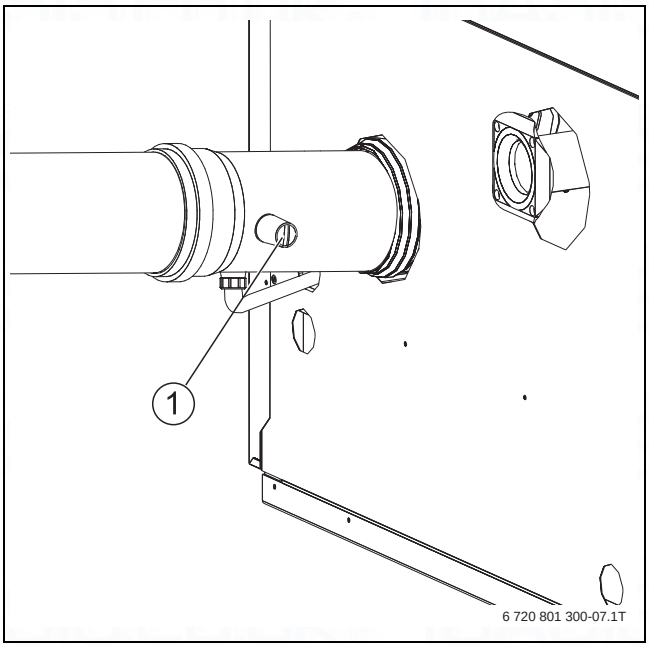

Fig. 43 Recording measured values

[1] Position of the test point in the flue pipe

6.17.1 Feed pressure

The required feed pressure for the installed flue gas/air supply system system must not be greater than 100 Pa (1.0 mbar).

DANGER: Risk to life through toxic flue gases escaping.
- Only operate the boiler with a chimney or flue system (→ table 6, page 8).

6.17.2 CO content

CO contents in air-free condition must be below 400 ppm or 0.04 vol. %.

Values above 100 ppm indicate an incorrect burner setting, incorrect appliance setup, burner and/or heat exchanger contamination or burner faults.

- Identify and eliminate the cause.

6.18 Function tests

During commissioning and the annual inspection, check all regulating, control and safety equipment for correct function and, where applicable, for correct settings.

6.18.1 Checking the ionisation current

Calling up service menus on the RC35 user interface

- Open the flap on the RC35 user interface.
- Press the Menu/OK + Menu/OK + Info keys simultaneously to open the **SERVICE MENU** menu.
- Turn the rotary selector anti-clockwise, until **Diagnosis** is selected (highlighted by ▶).

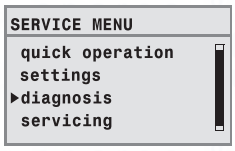

- Press the Menu/OK key to open the **SERVICE/DIAGNOSIS** menu.
- Turn the rotary selector anti-clockwise, until **Diagnosis** is selected (highlighted by ▶).
- Press the Menu/OK key to open the **SERVICE/DIAGNOSIS** menu.

The menu items displayed will vary depending on the system.

- Hold down the Menu/OK key and turn the rotary selector simultaneously to change the setting, e.g. ionisation current. The change takes effect when you release the key.
- Read off the ionisation current and enter it in the commissioning report (→ chapter 6.23, page 32). To ensure trouble-free operation, the ionisation current at partial and full load (and burning flame) should be at least 3 µA.
- Return to the operating mode at the RC35 user interface.
- Close the flap on the RC35 user interface.

6.19 Measuring the gas supply pressure and static pressure

- Release the locking screw of the pressure test port for the gas supply pressure and venting (→ Fig. 44, 45, 46 [1]) by 2 turns.
- Push the test hose of the pressure gauge (measurement accuracy less than 0.1 mbar) onto the pressure test port [1].
- With the burner operational (full load), measure the gas supply pressure and record the value in the commissioning report (→ chapter 6.23, page 32).
- If the gas supply pressure falls outside the values in table 15, page 30, shut down the boiler and notify your gas supplier. Commissioning is not permitted!

The maximum permitted gas static pressure depends on

- the proper function of the gas pressure regulator in the gas installation in accordance with its product-specific tolerance specifications for the permitted closing group.
- the product-specific specifications for the boiler in accordance with the manufacturer's information.

Checking of the gas pressure regulator in the gas installation:

- ▶ Shut down the burner from full load.
- ▶ Wait 10-20 seconds and then measure the resulting gas supply pressure/static pressure at the test nipple for the gas supply pressure/static pressure.

The gas static pressure determined must not exceed the value, which is defined by the closing group of the gas pressure regulator.

- ▶ If it is exceeded, inform the gas supplier about the required replacement of the gas pressure regulator.
- ▶ If the gas static pressure is >50 mbar, there must be no commissioning as specified by the manufacturer.
  In the case of a system currently operating, take the boiler out of operation.
- ▶ Remove the test hose.
- ▶ Carefully tighten the locking screw of the pressure test port for the gas supply pressure.

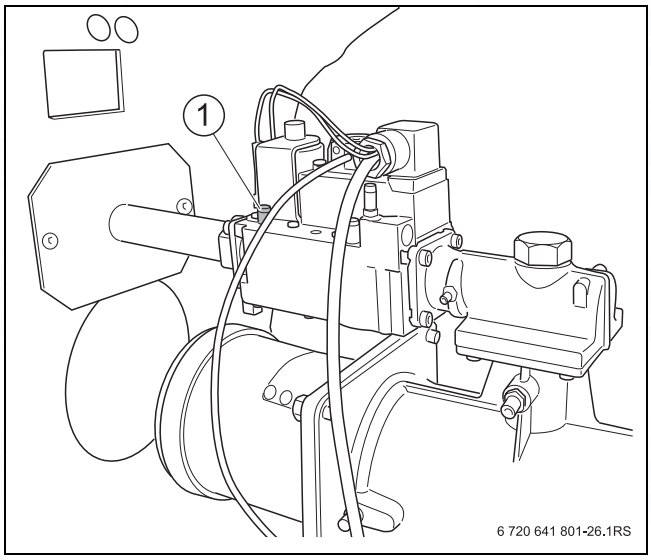

Fig. 44 Measuring the gas supply pressure (boiler size 90/120 kW)

[1] Pressure test port for measuring the gas supply pressure and for venting

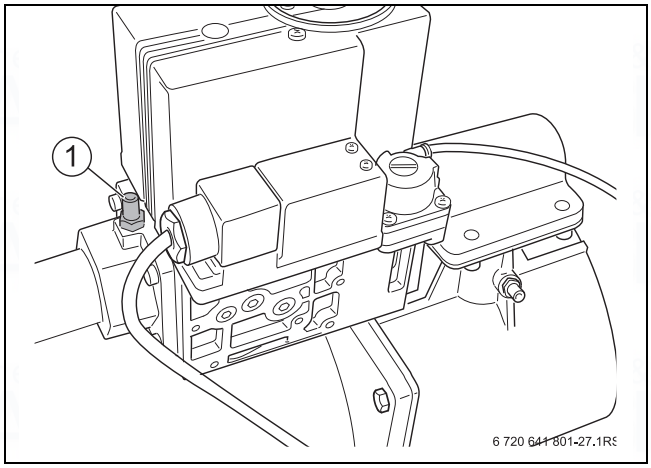

Fig. 45 Measuring the gas supply pressure (boiler size 160 kW)

[1] Pressure test port for measuring the gas supply pressure and for venting

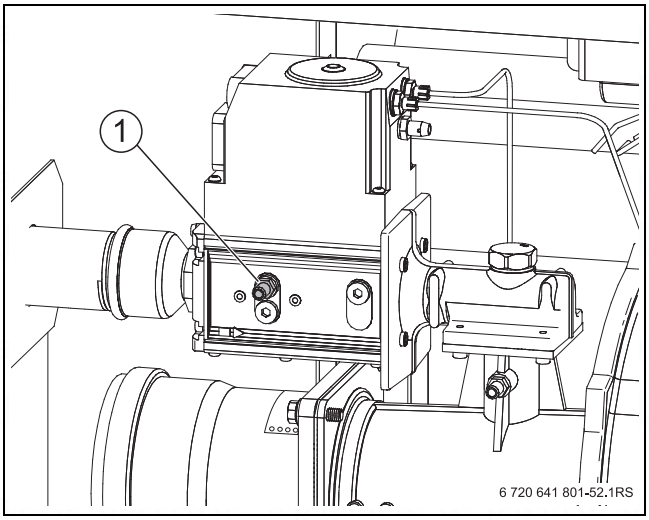

Fig. 46 Measuring the gas supply pressure (boiler size 200 to 280 kW)

[1] Pressure test port for measuring the gas supply pressure and for venting

Country:	Gas group	Supply pressure[1] [mbar]		
	(reference gas)	Min.	Rated	Max.
AT, BA, BG, BY, CH, CZ, DK, EE, ES, GB, GR, HR, IE, IT, KZ, LT, LU, LV, NO, PT, RO, RU, SE, SI, SK, UA	Natural gas H (G20)	17	20	25
HU	Natural gas H (G20)	18	25	33
DE[2], PL	Natural gas E (G20)	17	20	25
FR, BE	Sub-group E_s Natural gas E (G 20)	17	20	25
FR, BE	Sub-group E_i Natural gas E (G 25)	20	25	30
NL	Natural gas L (G25)	20	25	30
DE[2]	Natural gas LL (G25)	18	20	25

Table 15 Gas groups and supply pressures in accordance with EN 437

1) The gas supplier must ensure that the pressure conforms to country-specific and local regulations. The conditions mentioned above must also be observed. Commissioning outside the specified supply pressure range is not permitted.

2) Natural gas group "H in accordance with DVGW Code of Practice G 260" falls within Natural gas group "E in accordance with DIN EN 437". Natural gas group "L in accordance with DVGW Code of Practice G 260" falls within Natural gas group "LL in accordance with DIN EN 437".

The specified supply pressure must be ensured across the boiler's entire modulation range. If required, provide an additional pressure regulator.
In the case of multi-boiler or multi-consumer systems, the supply pressure range for the single boiler must be ensured in each operating condition of the multi-boiler or multi-consumer system. If necessary, supply each boiler or consumer via a separate pressure regulator. Observe the installation instructions for the pressure regulator.

6.20 Checking for leaks during operation

▶ With the burner operational, use a foaming agent to test all joints in the entire gas path, such as:

- Pressure test port
- Locking screw for the gas supply pressure
- Screw fittings (also at the gas connection) etc.

The agent must be approved for gas leak testing.

NOTICE: Risk of system damage due to short circuit!

▶ Prior to checking for leaks, cover areas at risk, e.g. the internal water pressure sensor and the return temperature sensor in the boiler return.

▶ Never spray leak detection agent onto cable entries, plugs or electrical cables. Do not allow it to drip onto them either.

▶ To prevent corrosion, carefully wipe off the leak detection agent afterwards.

6.21 Fitting sections of the casing

If the side and front panels cannot be fitted correctly, plumb the boiler vertically (→ chapter 5.9, page 21)

▶ First hook in side panels [2] at the bottom, then lift them slightly and hook in at the top.

▶ Secure the side panels with locking screws [3] at the front and back of the boiler.

▶ First hook in the bottom of the front panel [1], then raise slightly and hook in at the top.

▶ Secure the front panel with locking screw [3] at the top of the boiler.

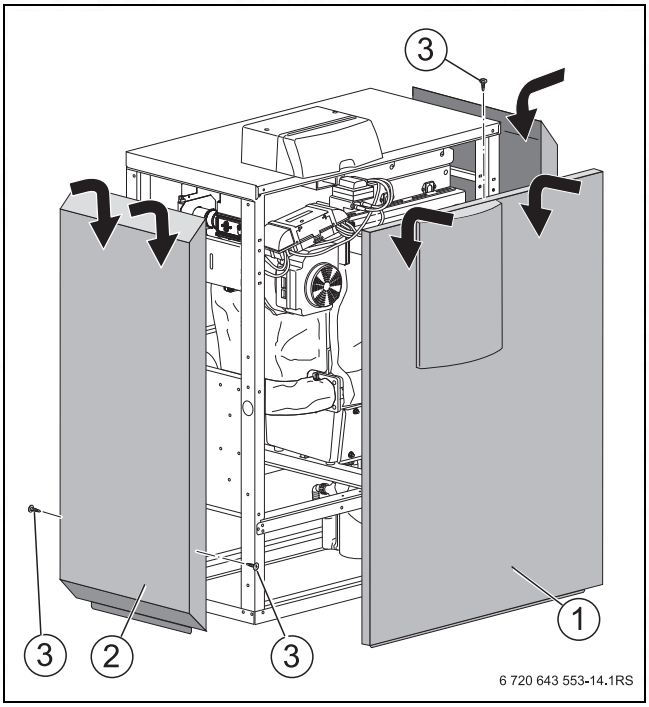

Fig. 47 Fitting sections of the casing

[1] Front panel
[2] Side panel
[3] Locking screws

▶ Affix the clear pocket containing the technical documentation in a clearly visible spot on the side of the boiler.

6.22 Informing the user, handing over technical documents

▶ Make the user familiar with the heating system and the boiler operation.

▶ Make the user aware, that the boiler and the control unit must only be opened by qualified contractors.

▶ Confirm the commissioning in the report (→ chapter 6.23).

▶ Together with the user carry out a system shutdown and startup

▶ Explain to the customer what to do in an emergency, e.g. a fire, by referring to the operating instructions.

▶ Hand over the technical documents to the user.

6.23 Commissioning report

▶ Confirm commissioning as complete; sign and enter the date.

	Commissioning work	Page	Unit	Measured values		Notes
1.	Filling the heating system and checking for leaks	18		☐		
2.	Has the information about water quality in the operator's log been observed?			Yes: ☐		
	- Concentration of additives			Additives: _____	Concentration: _____%	
3.	Checking the operating pressure	22		☐		
4.	Noting the gas parameters: Wobbe index, net calorific value	22	kWh/m³			
5.	Checking the system equipment	22		☐		
6.	Checking the gas line for tightness	23		☐		
7.	If required, convert to a different gas type	23 ff.				
8.	Venting the gas line	24		☐		
9.	Checking the supply air and exhaust air vents and flue gas	25		☐		
10.	Checking the supply air diaphragm	25		☐		
11.	Switching on the heating system	25		☐		
12.	Recording measured values:	29		Full load	Partial load	
	- Feed pressure		Pa			
	- Gross flue gas temperature t_A		°C			
	- Air temperature t_L		°C			
	- Net flue gas temperature t_A - t_L		°C			
	Flue gas losses q_A		%			
	CO content, free of air		ppm			
	- Carbon dioxide content (CO_2) or oxygen content (O_2)		%			
	- Carbon dioxide content (CO_2) or oxygen content (O_2) for 60% load with boiler size 200kW - 280 kW		60% load %			
13.	Measuring the gas supply pressure	29	mbar			
14.	Function tests	29				
	– Checking the ionisation current		µA			
15.	Checking for leaks during operation	31		☐		
16.	Fitting the casing sections	31		☐		
17.	Informing the user, handing over technical documents	31		☐		
18.	Professional commissioning by the installing contractor			Signature:		
19.	User signature			Signature:		

Table 16 Commissioning report

7 Shut down the heating system

7.1 Shutting down the heating system at the basic controller

Shut down the heating system at the basic controller. The burner stops automatically as well.

▶ Set the ON/OFF switch on the basic controller to "0" (OFF).

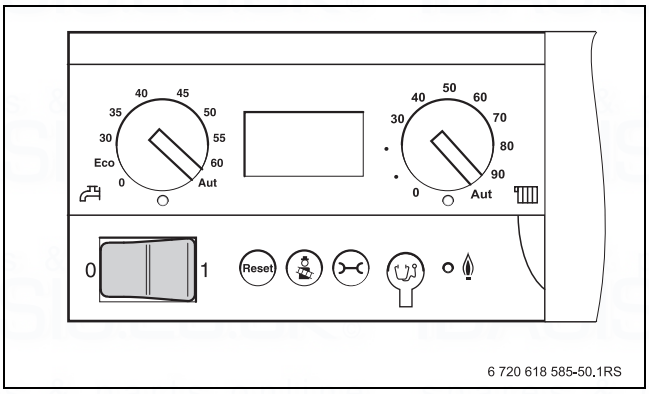

Fig. 48 Shutting down the heating system

▶ Close the main shut-off valve or gas isolator.

NOTICE: System damage due to frost!
The heating system can freeze up after a prolonged period (e.g. during a power failure, switching off the power supply, faulty gas supply, boiler fault etc.).

▶ Ensure that the heating system is in constant use (particularly when there is a risk of frost).

If the heating system is taken out of operation for a longer period and there is a risk of frost, the heating system must also be drained.

▶ Open the automatic air vent valve at the highest point of the heating system.

▶ Drain the heating water at the lowest point of the heating system by means of the drain & fill valve or a radiator.

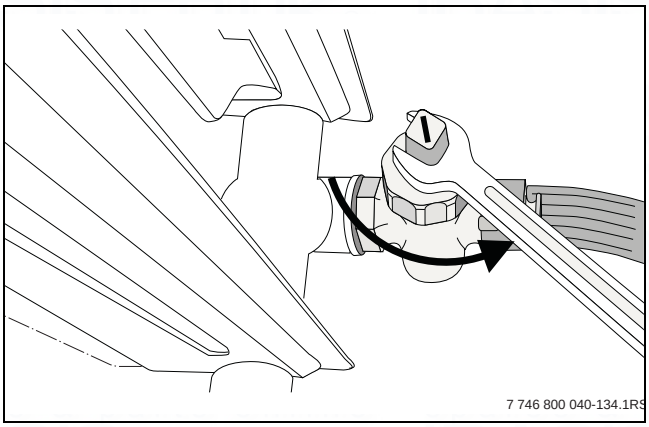

Fig. 49 Draining the heating system when there is a risk of frost

7.2 Shutting down the heating system in emergencies

Explain to your customer what to do in case of an emergency, e.g. if there is a fire.

7.2.1 In an emergency

▶ Never put yourself at risk of fatal injury. Your own safety is paramount.

▶ Close the main shut-off valve or gas tap.

▶ Isolate the heating system from the mains power supply by means of the heating system emergency stop switch or the appropriate domestic fuse/circuit breaker.

8 Environment / disposal

Environmental protection is a fundamental corporate strategy of the Bosch Group.
The quality of our products, their efficiency and environmental safety are all of equal importance to us and all environmental protection legislation and regulations are strictly observed.
We use the best possible technology and materials for protecting the environment taking into account of economic considerations.

Packaging

We participate in the recycling programmes of the countries in which our products are sold to ensure optimum recycling.
All of our packaging materials are environmentally friendly and can be recycled.

Old appliance

Old appliances contain materials that must be recycled.
The relevant assemblies are easy to separate, and all plastics are identified. In this way the individual assemblies can easily be sorted and directed to the recycling or disposal facilities.

9 Inspection and maintenance

NOTICE: Boiler damage through a lack of, or unsatisfactory, cleaning and maintenance.

▶ Inspect the heating system annually and clean if required.

▶ Carry out maintenance once annually. To prevent damage to the heating system, remedy all faults immediately.

Heating systems should be regularly serviced for the following reasons:

- to maintain a high level of efficiency and to operate the system economically (low fuel consumption),
- to achieve a high level of operational reliability,
- to maintain the cleanest possible combustion
- to ensure reliable operation and a long service life.

Maintenance work must only be carried out by approved contractors. Use only original spare parts. Maintenance must be carried out once annually. Enter the results of the inspection on a rolling basis in the inspection and maintenance report.

Offer your customer an annual maintenance and inspection contract, which is based on actual requirements. You can check in the inspection and maintenance reports, which activities should be included in a contract (→ chapter 9.12).

Refer to the spare parts catalogue when ordering spare parts.

9.1 Preparing the boiler for inspection

DANGER: Risk to life from electric shock!
- Prior to opening the boiler: Disconnect the power across all poles and secure against unintentional reconnection.

- Shut down the heating system (→ chapter 7.1, page 33).
- Remove the locking screw [2] from the top of the front panel at the centre of the boiler.
- Slightly lift the front panel [1] and remove it towards the front.

DANGER: Risk to life through explosion of flammable gases!
- Work on gas pipework should only be carried out by approved contractors (observe local regulations).

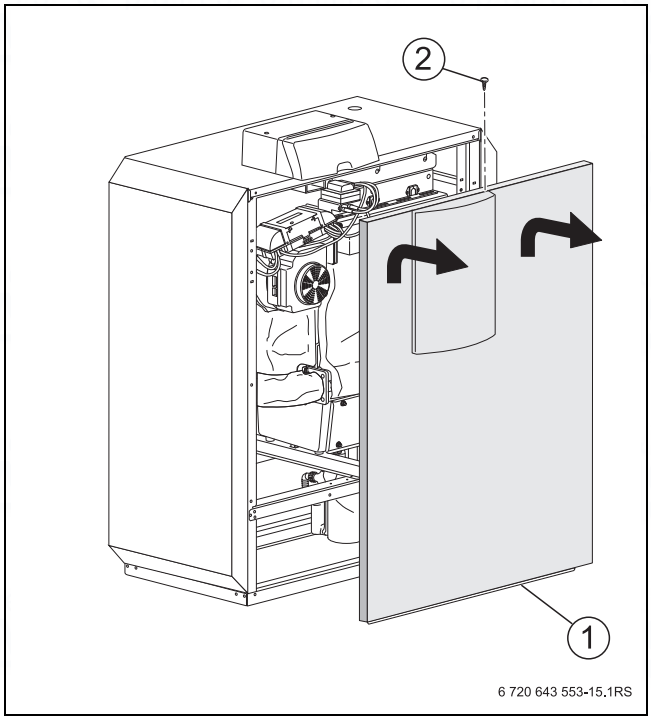

Fig. 50 Removing the front panel

[1] Front panel
[2] Locking screw

9.2 General work

The following work is not described in any further detail in this document. It must nevertheless still be carried out:

- Check the general condition of the heating system.
- Visual inspection and function check of the heating system.
- Check the supply air and flue gas routing for function and safety.
- Check all gas and water pipes for signs of corrosion.
- Replace any corroded pipework.
- Check the pre-charge pressure of the expansion vessel.
- Once a year check the concentration of any anti-freeze/additives that may be used in the system fill water.
- If necessary, check installed water treatment cartridges (in the make-up feed line) to ensure that they are functioning correctly and for wear.

9.3 Internal leak test

9.3.1 Determining the test volume

$V_{test} = V_{total} = V_{pipe} + V_{gas\ valve}$

- Determine the length of the pipeline up to the gas appliance shut-off valve.
- Determine the gas valve volume ($V_{gas\ valve}$) using table 17.
- Determine the pipework volume (V_{pipe}) using table 18 and table 19.
- Calculate the test volume (V_{test}) according to the above equation.

Gas train volume (approximate values)	
Gas train volumes up to 50 kW	0.1 litres
Gas train volume > 50 kW	0.2 litres

Table 17 Gas train volume ($V_{gas\ valve}$)

Pipework length	Pipework volume (V_{pipe}) in litres					
	Pipework diameter in inches					
in metres	½	¾	1	1¼	1½	2
1	0.2	0.4	0.6	1.0	1.4	2.2
2	0.4	0.7	1.2	2.0	2.7	4.4
3	0.6	1.1	1.7	3.0	4.1	6.6
4	0.8	1.5	2.3	4.0	5.5	8.8
5	1.0	1.8	2.9	5.1	6.9	-
6	1.2	2.2	3.5	6.1	8.2	-
7	1.4	2.5	4.1	7.1	9.6	-
8	1.6	2.9	4.6	8.1	-	-
9	1.8	3.3	5.2	9.1	-	-
10	2.0	3.6	5.8	10.1	-	-

Table 18 Pipework volume (V_{pipe}) subject to pipe length and diameter

Pipework length	Pipework volume (V_{pipe}) in litres					
	Pipework diameter in mm (copper pipe)					
in metres	15 x 1	18 x 1	22 x 1	28 x 1.5	35 x 1.5	45 x 1.5
1	0.1	0.2	0.3	0.5	0.8	1.4
2	0.3	0.4	0.6	1.0	1.6	2.8
3	0.4	0.6	0.9	1.5	2.4	4.2
4	0.5	0.8	1.3	2.0	3.2	5.5
5	0.7	1.0	1.6	2.5	4.0	6.9
6	0.8	1.2	1.9	2.9	4.8	8.3
7	0.9	1.4	2.2	3.4	5.6	9.7
8	1.1	1.6	2.5	3.9	6.4	-
9	1.2	1.8	2.8	4.4	7.2	-
10	1.3	2.0	3.1	4.9	8.0	-

Table 19 Pipework volume (V_{pipe}) subject to pipe length and diameter

9.3.2 Carrying out a leak test

- Close the gas appliance shut-off valve.
- Release the locking screw of the pressure test port by two turns.
- Push the test hose of the U-tube pressure gauge onto the pressure test port.
- Open the gas appliance shut-off valve and wait for the pressure to stabilise.
- Note and record the pressure.
- Close the gas appliance shut-off valve and check the pressure again a minute later.
- Determine the pressure drop per minute from the differential.

By means of the determined pressure drop per minute and the test volume (V_{test}), check from the following diagram (→ fig 54, page 36), whether the gas valve should still be used.

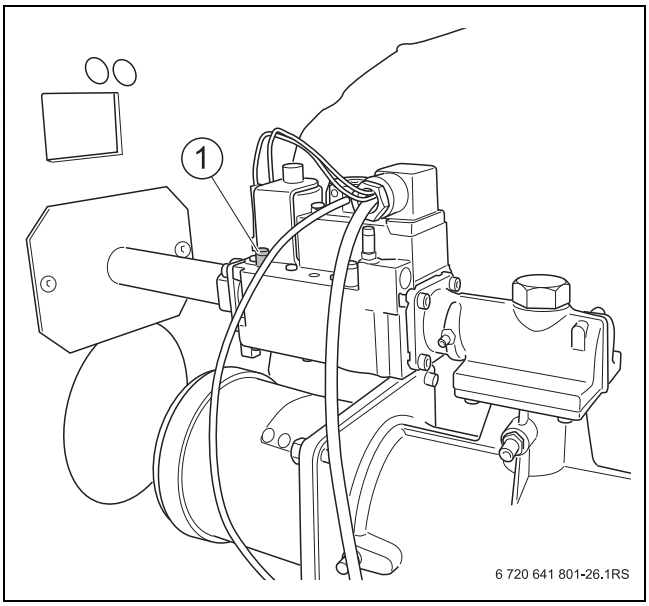

Fig. 51 Checking for internal leaks (boiler size 90/120 kW)

[1] Pressure test port

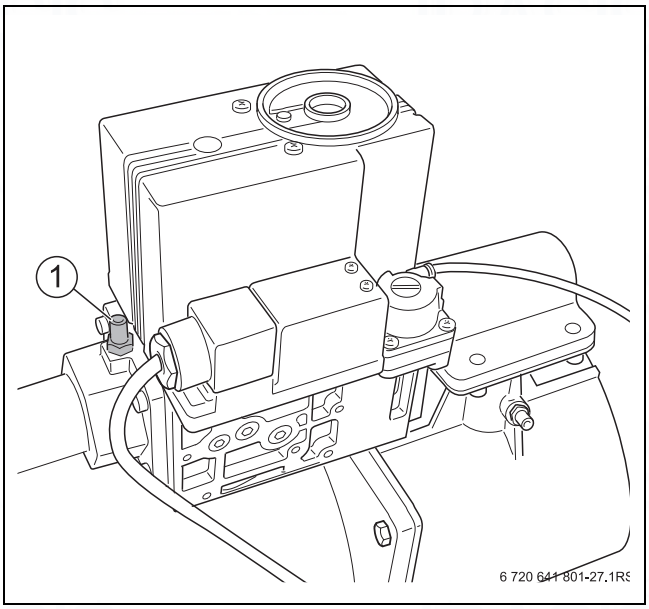

Fig. 52 Checking for internal leaks (boiler size 160 kW)

[1] Pressure test port

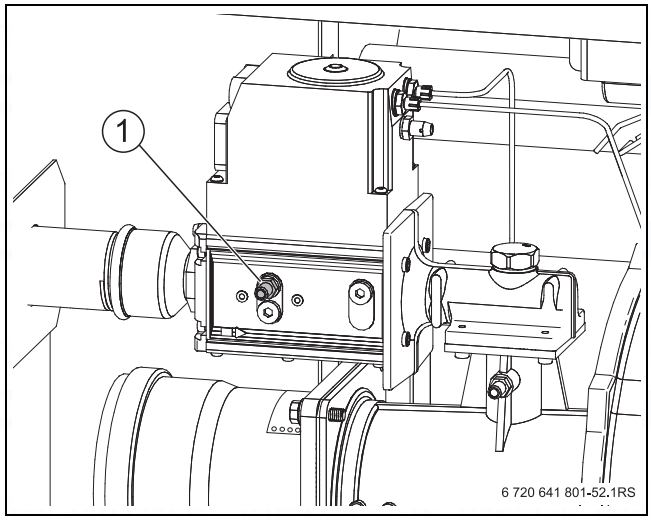

Fig. 53 Checking for internal leaks (boiler sizes 200 to 280 kW)

[1] Pressure test port

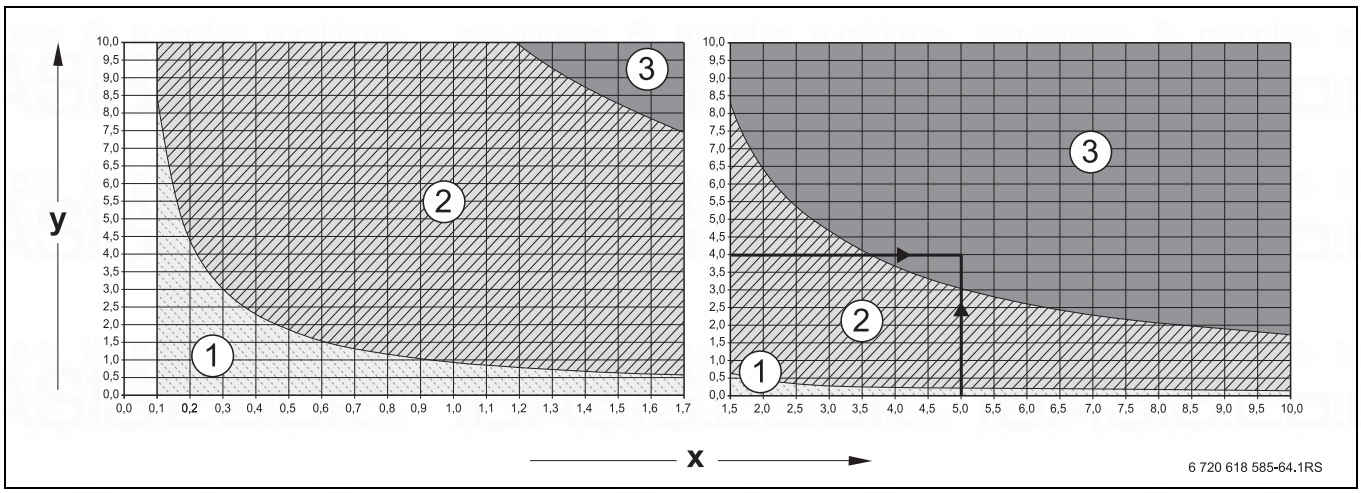

Fig. 54 Permitted pressure drop per minute during the internal leak test with the prevailing gas supply pressure

[1] "Valve tight" range = applies to new installations
[2] "Valve adequately tight" range = valve can be used without restrictions
[3] "Valve leaks" range = valve may not be used >> perform a test as described in the following

x Test volume in litres
y Pressure drop in one minute in mbar

Read-off example: test volume (V_{test}) 5 litres and pressure drop 4 mbar/min = range 3 "Valve leaking" = valve may not be used >> perform test as described below

If you detect a steep pressure drop of > 10 mbar/minute at a test volume of (V_{test}) of < 1 litre, you must increase the test volume (V_{test}). For this include the pipework up to the next shut-off valve in the leak test and repeat the test using the new test volume (V_{test}).

If the read-off point for the test volume (V_{test}) and pressure drop per minute lies within the "Valve leaks" range (see read-off example), you must carry out the test described below.

NOTICE: System damage!
- Never spray or let leak detection agent drip onto cable entries, plugs or electrical cables/leads.
- Cover areas at risk before testing for leaks.

- Check all joints in the tested pipework section using a foaming leak detection agent.
- If required, seal any leaks and repeat the test.
- If no leak is detected, replace the gas valve.

Completing the leak test
- Remove hose.
- After completing the measuring test, firmly tighten the screw in the pressure test port.
- Test the pressure test port for leaks.

9.4 Checking the operating pressure of the heating system

NOTICE: System damage through boiler scaling!
- Observe the water quality requirements in accordance with the "Water Quality Operators Log" and enter the volume and quality of the fill water.

NOTICE: System damage!
If the heating system is filled when hot, the resulting temperature stresses can cause stress cracks. The boiler will then leak.
- Only fill the heating system when cold (the flow temperature should not exceed 40 °C).
- **When the heating system is in operation, never fill it via the boiler drain & fill valve. Instead, only use a WRAS approved filling method.**

NOTICE: System damage due to frequent topping up!
Depending on water quality, the heating system may be damaged by corrosion or scaling if you frequently need to top up the water (observe the water quality log).
- Vent the heating system during filling.
- Check the heating system for leaks.
- Check the function of the expansion vessel.

In sealed systems the pressure gauge needle must be within the green marking.

The red needle of the pressure gauge must be set to the required operating pressure.

Establish an operating pressure of at least 1 bar.

- Check the operating pressure of the heating system.
  The operating pressure is too low, if the pressure gauge needle is below the green marking. Top up with water.

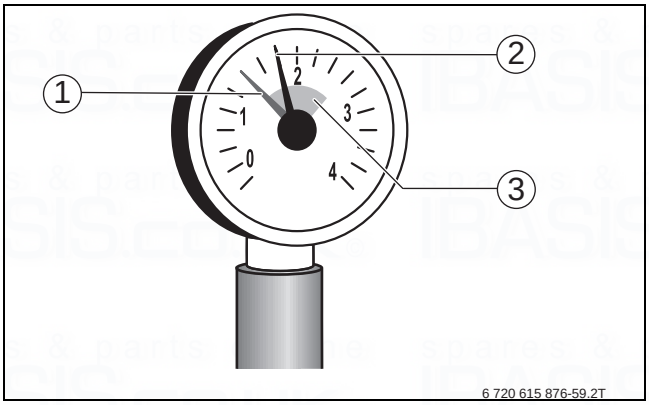

Fig. 55 Pressure gauge for sealed systems

[1] Red needle
[2] Pressure gauge needle
[3] Green marking

CAUTION: Health risk from contaminated drinking water!

- Observe all regulations and standards applicable in your country regarding the prevention of drinking water contamination.
- In Europe, observe standard EN 1717.

- Top up the water via a WRAS approved filling method.
- Vent the heating system via the radiator air vent valves.
- Check the operating pressure again.

You can also read off the operating pressure on the basic controller (e.g. display "P1.4" corresponds to 1.4 bar).

- Enter the amount of top-up water in the "Water Quality Operator's Log".

9.5 Measuring the CO_2 content

- Insert the test sensor into the core flow through the test port in the flue pipe
- Record the flue gas values.
  Where the CO_2 values fall outside the target range (full load from 8,5% up to 9,4%; partial load from 9,0% to 9,6%; and additionally in the case of 200 kW - 280 kW at 60% load < 9,7%), adjust the burner as described from chapter 6.13 and 6.14, page 26 ff. onwards.

Following applies for **Denmark** :

- The O_2 contents (natural gas DK, CO2 nominal=12.0 vol. – %), which correspond to the given CO_2 setting values, should be taken from chapter 11.5, page 61

9.6 Determining the level of contamination of the burner and heat exchanger

Before cleaning the burner and heat exchanger, first check the following points or carry out these steps.

9.6.1 Determining the level of contamination

- Connect a differential pressure measuring device between the test port on the burner [1] and the boiler connection elbow or connector [2] at the back of the boiler.

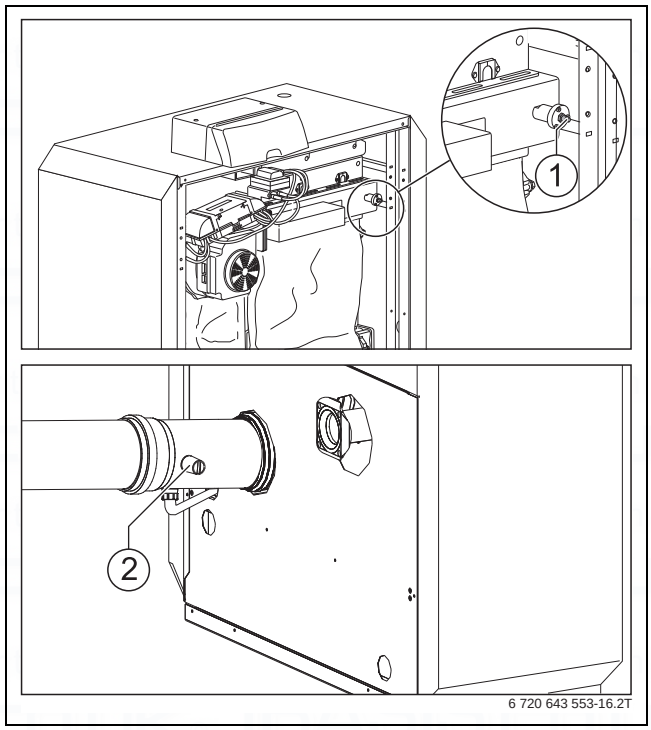

Fig. 56 Determining the level of contamination

[1] Test port on the burner
[2] Test point on the connector

Switch on the heating system at the basic controller.

- Set the ON/OFF switch on the basic controller to "I".

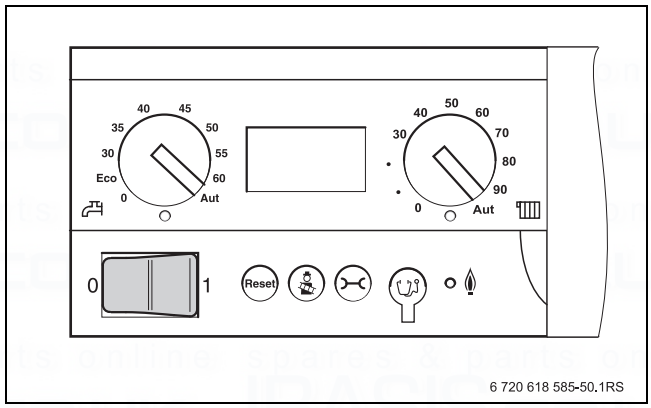

Fig. 57 Switching on the heating system

The entire heating system is switched ON. The status is displayed and shows the current boiler temperature in °C.

Carrying out a flue gas test

The key is used by the installer for the flue gas test.

The heating control unit operates for 30 minutes at a higher flow temperature. During the flue gas test the decimal point illuminates in the status display.

- Ensure that heat is being drawn off.
- Press the key until the decimal point in the status display illuminates (at least 2 seconds).
- Carry out the flue gas test.
- To cancel the flue gas test, press the key again.

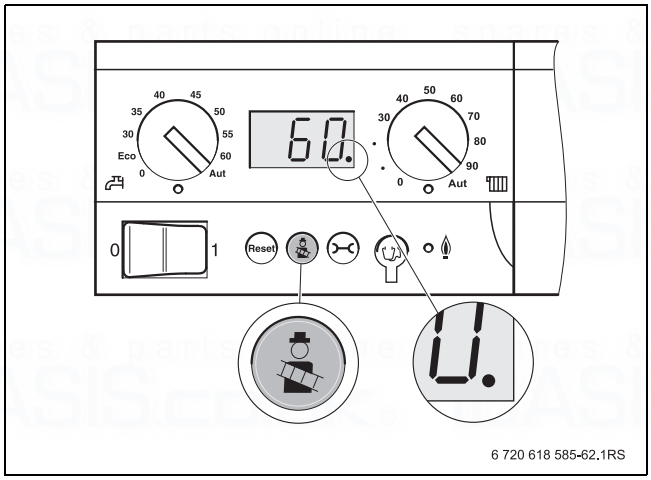

Fig. 58 Calling up the flue gas test

Calling up service menus on the RC35 user interface and displaying monitor data

- In order to open the **SERVICE MENU**, press the Menu/OK + Info + ↩ keys simultaneously.
- Turn the ◯ rotary selector anti-clockwise, until **Diagnosis** is selected (highlighted by ▶).

```
SERVICE MENU
 quick operation
 settings
▶diagnosis
 servicing
```

- Press the Menu/OK key to open the **SERVICE/DIAGNOSIS** menu.
- Turn the ◯ rotary selector anti-clockwise, until the **Monitor value** is selected (highlighted with ▶).

```
SERVICE/DIAGNOSIS
 function test
▶monitor value
 diagnosis
 servicing
```

- In order to open the **DIAGNOSIS/MON. VALUE** menu, press the Menu/OK key.
- Turn the ◯ rotary selector anti-clockwise, until the **boiler / burner** is selected (highlighted with ▶).

```
DIAGNOSIS/MON. VALUE
▶boiler / burner
 domestic hot water
 heating circuit 1
 bus users
```

- In order to open the **BOILER/BURNER** menu, press the Menu/OK key. The values monitored are displayed as a list; in other words, more values will appear if the rotary selector is turned.
- Read off the "Current heat output" at the RC35 user interface.
- Wait until the "Current heat output" has reached 100%.
- Read off the differential pressure at the measuring device and compare it with the value in table 20.
  If the measured pressure is higher than the value in the table, the heat exchanger must be cleaned.

Boiler size [kW]					
90	120	160	200	240	280
360	460	550	530	540	560

Table 20 Cleaning threshold - differential pressure in Pa

9.7 Cleaning the burner and heat exchanger

- Shut down the heating system (→ chapter 7.1, page 33).
- Close the main shut-off valve or gas isolator.
- Allow the boiler to cool down.
- Remove the siphon (→ Fig. 59, [1]) from the drain of the condensation catch pan (→ Fig. 59, [2]) and place a bucket or pan below it.

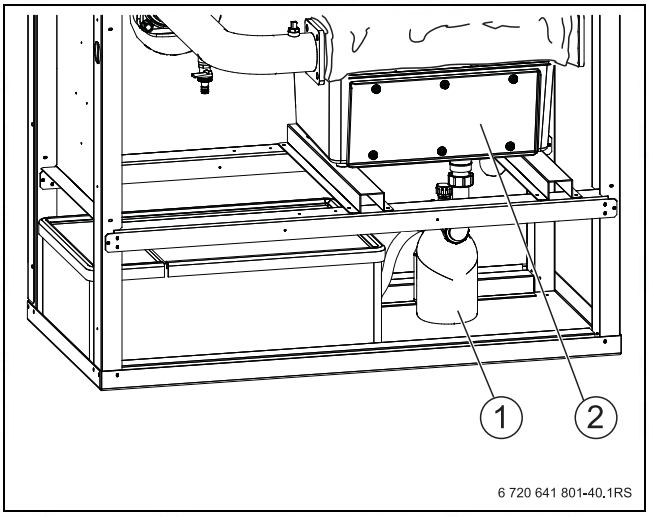

Fig. 59 Removing the siphon

[1] Siphon
[2] Condensate pan

9.7.1 Removing the burner

- Release all electrical plug-in connectors [1, 2] at the burner.

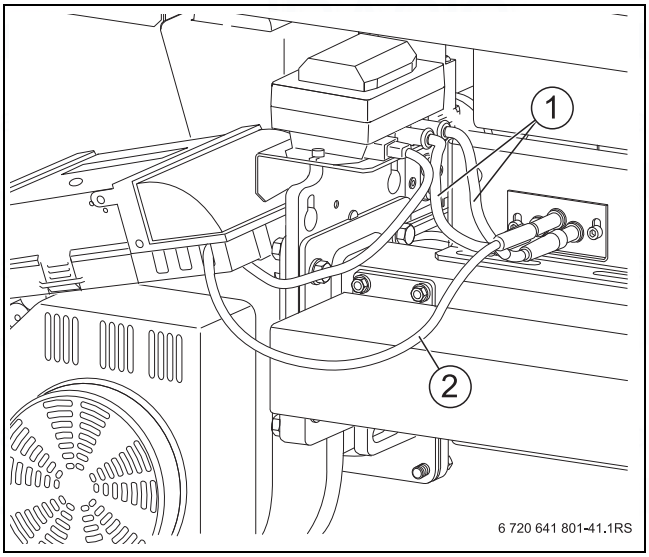

Fig. 60 Releasing all electrical plug-in connectors at the burner

[1] Ignition cable
[2] Monitoring cable

- Undo the fixing nuts [3] from the top and bottom of the burner shield.
- Bolts on the side of the fan:
  undo the 2 rear hexagon bolts [2] by 2 turns;
  remove the 2 front hexagon bolts [1].
- Carefully pull out the burner towards you.

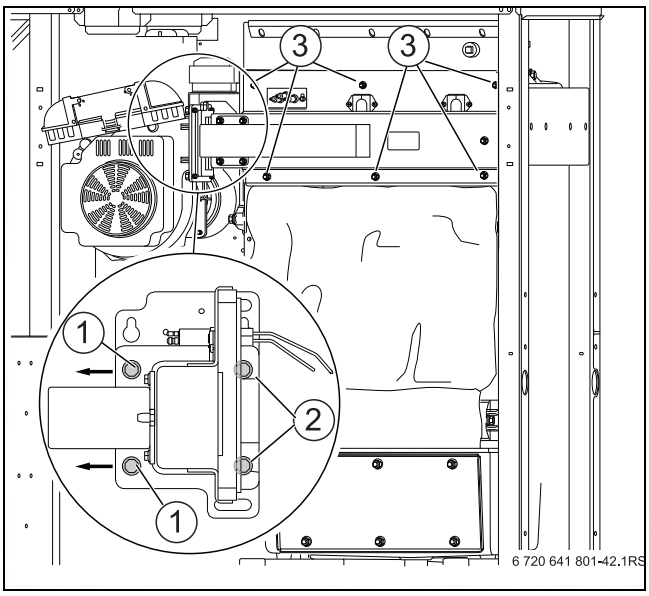

Fig. 61 Removing the burner from the heat exchanger

[1] Front hexagon screws
[2] Rear hexagon screws
[3] Fixing nuts

9.7.2 Wet cleaning the heat exchanger

When wet cleaning, use a cleaning agent appropriate to the level of contamination (soot or encrusted residues). The cleaning agent must be suitable for aluminium!

DANGER: Risk to life from escaping flue gas!
- When fitting the cleaning cover, check for damaged gaskets and their correct seating.

- Clean the heat exchanger with water or a cleaning agent suitable for aluminium (observe the instructions by the manufacturer of the cleaning agent).

During wet cleaning, protect electrical components (fan, gas valve etc.) against moisture and contamination.

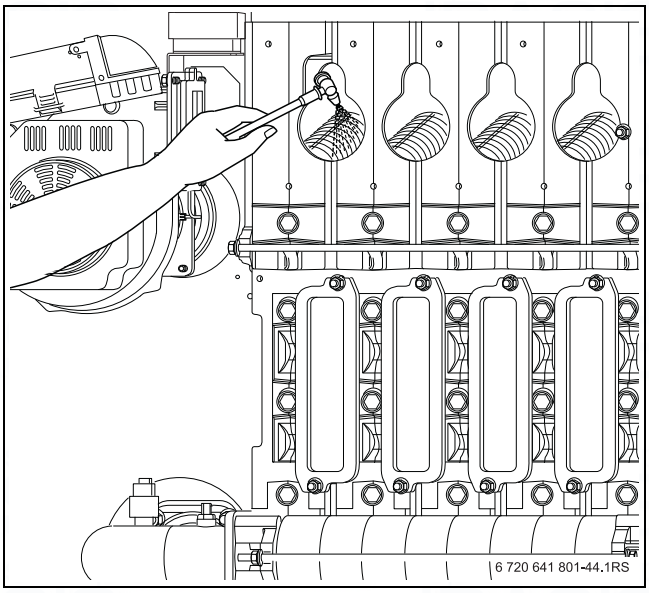

Fig. 62 Wet cleaning the heat exchanger

- Use a hose to flush any residual dirt into the bucket or condensation catch pan.
- Clean the condensate pan with water.
- Clean the siphon with water.

DANGER: Risk to life through poisoning! Siphons not filled with water can cause a risk to life through escaping flue gas.
- Fill the siphon with approx. 2 litres of water.
- Fit the siphon (→ chapter 5.5.5, page 17 ff.).

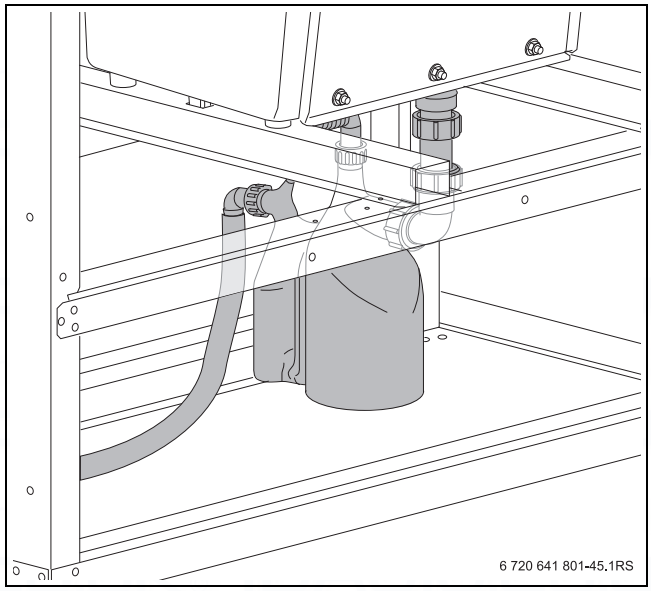

Fig. 63 Cleaning the siphon

- Check the condensate drain for blockages.

9.7.3 Cleaning the burner

- Blow out the burner rods and manifold from inside towards the outside with compressed air.

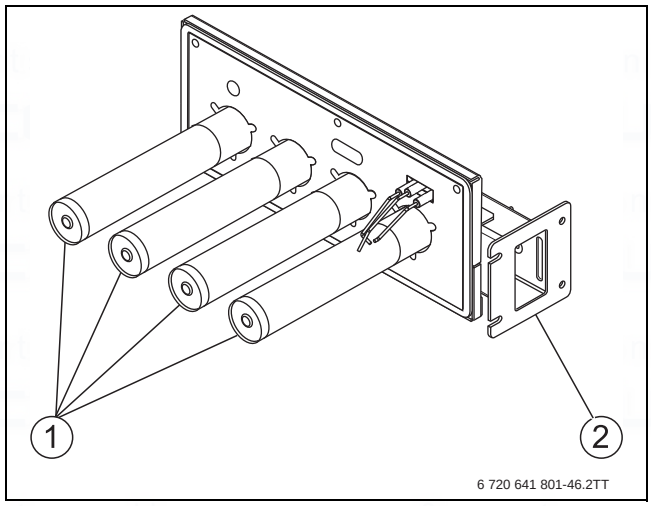

Fig. 64 Burner

[1] Burner rods
[2] Manifold

9.7.4 Checking and adjusting electrode position

Adjusting the electrode position

- Measure the distances between the electrodes and the burner rod in accordance with → Fig. 65 and adjust with the long holes of the electrodes if required.
- Use the adjustment gauge provided to check the electrode position. The adjustment gauge is either fixed to the appliance frame (→ Fig. 1, page 6), or it is in the wallet with the enclosed technical documentation.
- Adjust the burner rod in such a way, that the electrode position corresponds to → Fig. 65.
  The electrode position is in the centre of the hole pattern

DANGER: Risk of death from escaping flue gas!
Incorrectly positioned or damaged ignition electrodes can cause pressure surges as a result of faulty combustion, and these in turn can damage the flue gas system. In such cases carbon monoxide (CO) can escape into the room.

- Never bend electrodes. Bending the electrode damages it and is therefore generally prohibited.
- Check the specified electrode position and clearances during installation and all maintenance.

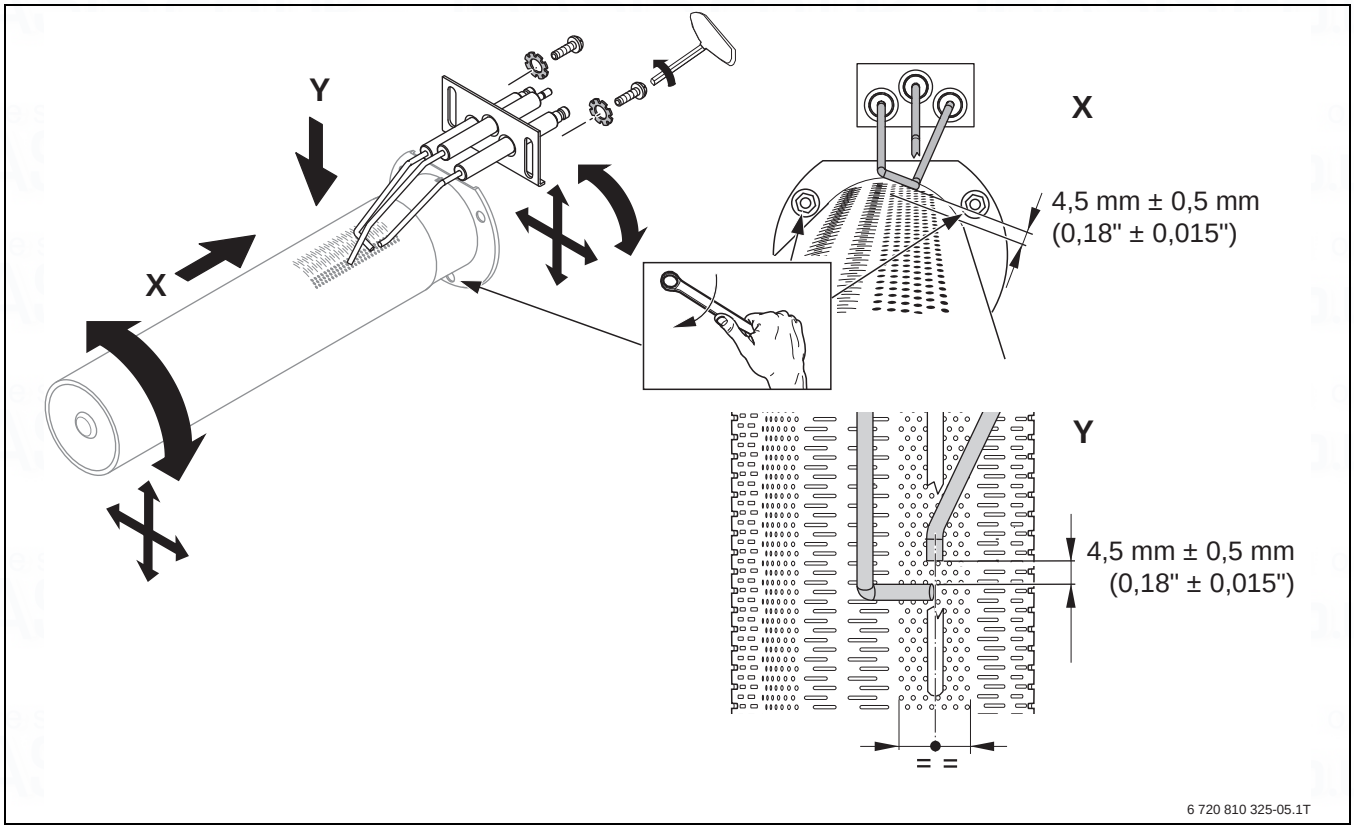

Fig. 65 Setting of electrode position (overview)

Checking the electrode position

▶ Check the electrode clearances and position in accordance with the following figures by using the adjustment gauge provided.

Storing the adjustment gauge:

▶ After using it, store the adjustment gauge in the wallet with the technical documents

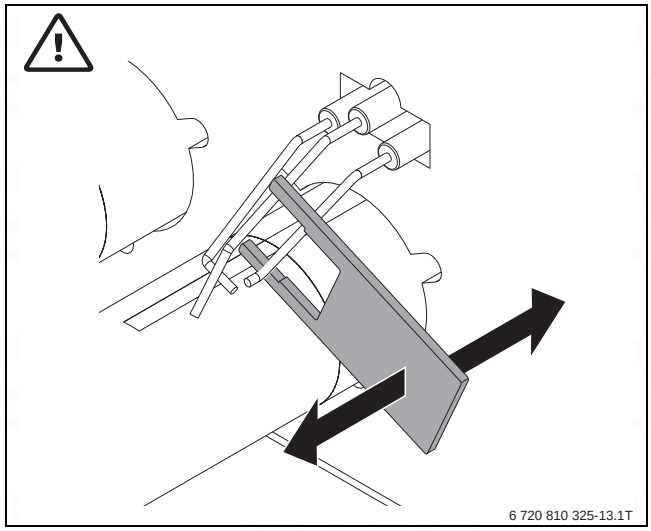

Fig. 66 Checking the clearance of the ignition electrode to burner rod

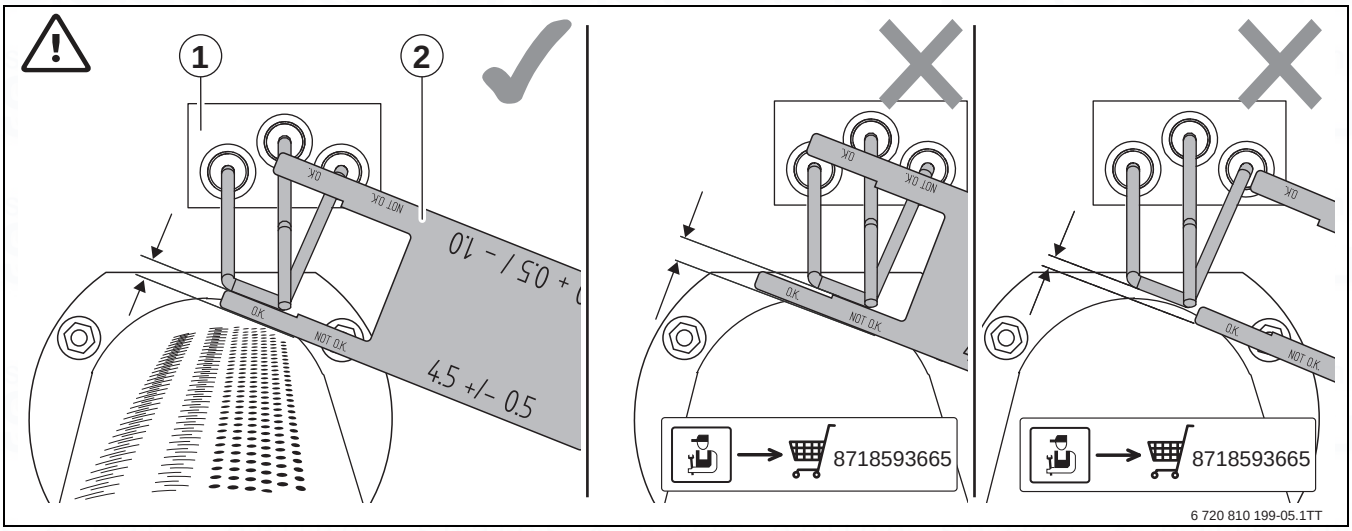

Fig. 67 Checking the clearance of the ignition electrode to burner rod

[1] Electrode block (ignition electrode/flame sensing electrode)
[2] Adjustment gauge

Adjust the electrodes in accordance with Fig. 65, page 40.
If no further adjustments are possible, use a new ignition electrode spare part.

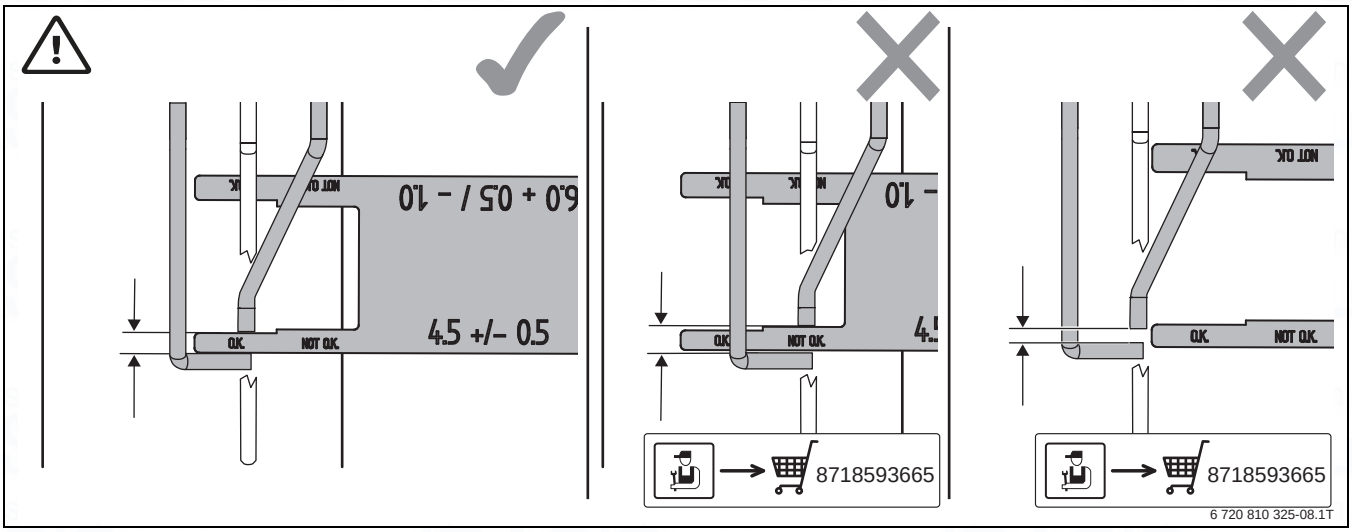

Fig. 68 Checking the electrode clearance

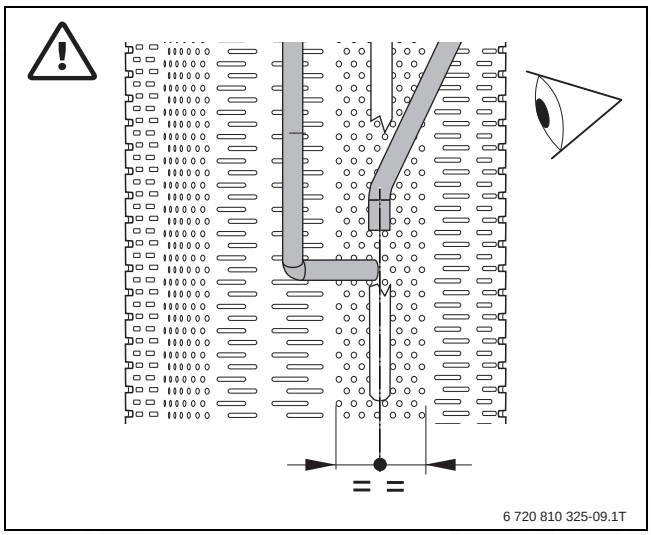

Fig. 69 Visual inspection of the electrode position using the hole pattern

Burn-off

- Inspect the ignition electrode clearance (burn-off) in accordance with → Fig. 65 and carry out replacement if necessary. Bending the electrodes is not permitted.
- Check the electrodes for contamination, deposits, wear or damage.
- In the event of wear or damage, replace the electrode block.
- If contamination or deposits are found on the electrodes, replace the electrode block or sand down the electrodes.

We recommend that the electrode block is replaced during annual maintenance.

9.8 Refitting detached parts

- Reassemble all boiler parts that were removed for inspection and maintenance purposes in the reverse order.
- Check all gaskets for wear and damage.
- Replace gaskets if required.
- Check the flat gasket inside the flange and replace, if required, following an inspection or service.

There is an indicator window on the top of the flange so you can check from the outside that a gasket has been inserted.

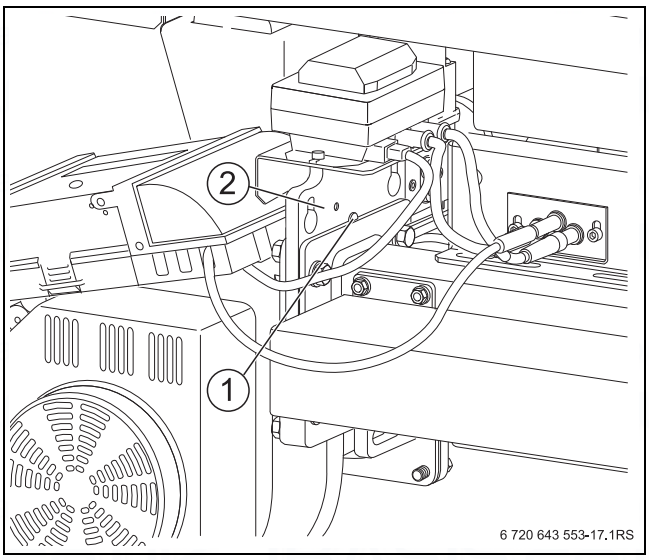

Fig. 70

[1] Indicator window on flange
[2] Flange

9.9 Checking for leaks during operation

NOTICE: Risk of system damage due to short circuit!

- Cover the fan and other points at risk prior to checking for leaks.
- Never apply leak detector spray to cable entries, plugs or electrical cables/leads. Do not allow it to drip onto them either.

- Start the boiler and check all gaskets for leaks under full load using a leak detection agent.
- Further checks of the tightness of the entire gas path (→ chapter 6.20, page 31).

9.10 Checking the ionisation current

To ensure trouble-free operation, the ionisation current at partial and full load (and burning flame) should be at least 3 µA.

The ionisation current (flame current) can be read off on the RC35 programming unit at "SERVICE MENU DIAGNOSIS/MONITOR VALUE" (→ chapter 6.18.1).

9.11 Completing inspection and maintenance

9.11.1 Fitting the casing sections

- Fit the casing sections (→ Fig. 47, page 31).

9.11.2 Confirming inspection and maintenance

- Sign the inspection and maintenance report in this manual (→ chapter 9.12).

9.12 Inspection and maintenance reports

The inspection and maintenance reports also serve as templates for photocopying.

▶ Sign and date the completed inspection work.

Inspection work		Page	Full load	Partial load	Full load	Partial load
1.	Checking the general condition of the heating system (visual inspection and function check)		☐	☐	☐	☐
2.	Check the system parts, which are in contact with gas or water, for the following:					
	- Internal leaks		☐	☐	☐	☐
	- Visible signs of corrosion		☐	☐	☐	☐
	- Signs of ageing		☐	☐	☐	☐
3.	Check the concentration of antifreeze/additives in the heating water (observe the manufacturer's instructions and the details in the operator's log).		Concentration:_____%		Concentration:_____%	
4.	Check the water pressure of the heating system.	36	☐	☐	☐	☐
	- Pre-charge pressure of the expansion vessel (→ installation instructions for the expansion vessel)					
	- Operating pressure	36				
5.	Determine extent of contamination:	37	_____Pa	–	_____Pa	–
	Check the burner and heat exchanger for contamination; shut down the heating system for this step. Clean the burner and/or heat exchanger if necessary.	37	☐	☐	☐	☐
6.	Check the siphon and condensation catch pan; shut down the heating system for this step.					
7.	Check the electrode block; shut down the heating system for this step.	40				
8.	Checking the gas supply pressure	29				
9.	Check the supply air and exhaust air vents, the flue gas connection and the flue gas routing.	25	☐	☐	☐	☐
10.	Record the measured values:	29				
	- Feed pressure		_____Pa	_____Pa	_____Pa	_____Pa
	- Gross flue gas temperature t_A		_____°C	_____°C	_____°C	_____°C
	- Air temperature t_L		_____°C	_____°C	_____°C	_____°C
	- Net flue gas temperature t_A - t_L		_____°C	_____°C	_____°C	_____°C
	- Flue gas loss qA		_____%	_____%	_____%	_____%
	- CO content, free of air		_____ppm	_____ppm	_____ppm	_____ppm
	- Carbon dioxide content (CO_2) or oxygen content (O_2)		_____%	_____%	_____%	_____%
	- Carbon dioxide content (CO_2) or oxygen content (O_2) for 60% load with boiler size 200kW - -280 kW		60% load _____%		60% load _____%	
11.	Carry out function checks:	29				
	- Check the ionisation current.		_____µA	_____µA	_____µA	_____µA
12.	Check for leaks during operation.	31	☐	☐	☐	☐
13.	Check that the control unit is set correctly to meet demand (see documents for the control unit).	–	☐	☐	☐	☐

Table 21 Inspection and service report

Inspection work		Page	Full load	Partial load	Full load	Partial load
14.	If necessary, check the installed water treatment cartridge for function and wear.		☐	☐	☐	☐
15.	Final checking of inspection work	–	☐	☐	☐	☐
	Confirm professional inspection Company stamp/date/signature					

Table 21 Inspection and service report

If any condition requiring maintenance is identified in the course of the inspection, that work must be carried out as required.

	Demand-based maintenance	Page	Date: ____	Date: ____
1.	Shut down the heating system.	34	☐	☐
2.	Clean the burner and heat exchanger.	38	☐	☐
3.	Clean the siphon.	39	☐	☐
4.	Clean the condensation catch pan.	39	☐	☐
5.	Electrode block 1) adjusted; 2) cleaned	40	1) ☐ ; 2) ☐	1) ☐ ; 2) ☐
	Electrode block replaced.		☐	☐
6.	Carry out a function check.		☐	☐
7.	Carry out leak test on all joints			
	Confirm professional maintenance. Company stamp/signature			

Table 22

10 Troubleshooting

10.1 Recognising the operating condition and clearing faults

If a fault has developed, the fault code flashes on the control unit display. The RC35 user interface shows faults as plain text messages.

NOTICE: Risk of system damage through frost.
The heating system can freeze up if it has been switched off through a fault shutdown.

- ▶ Rectify the fault immediately and restart the heating system.
- ▶ Where that is not possible, drain the heating and DHW pipework at the lowest point.

If the display flashes and does not display the current boiler temperature or a status indicator, there is a fault present in the system.

Example: "6A" = the burner will not start

For an overview of the operating and fault codes, along with possible causes and remedial measures, see the control unit→ documentation and the following chapter 10.3.

▶ Hold down "Reset" for 5 seconds to clear the fault.

Some faults have to be cleared using the reset button on the burner control unit (→ chapter 10.3, page 46).

A reset is only possible, if a fault message is flashing. The display shows "rE" whilst the reset is being performed.

If the display then reverts to a normal status indicator message, the fault has been eliminated. Should the fault reoccur, repeat the reset two or three times.

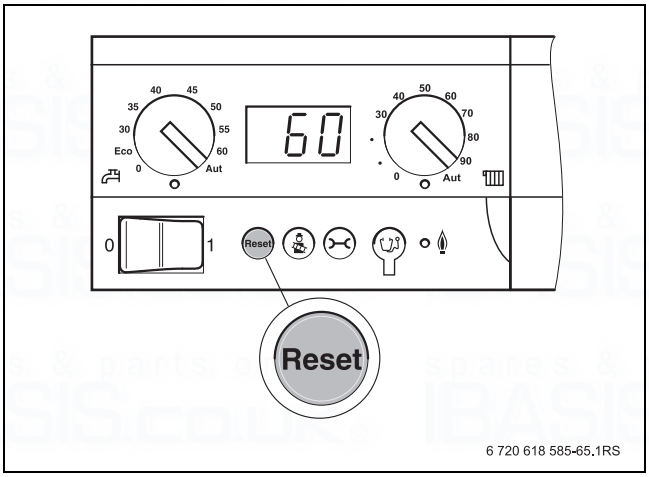

Fig. 71 Clearing a fault with the "Reset" key

10.2 Emergency operation

The burner control unit automatically goes to emergency operation, if the communication with the Logamatic MC10 control unit is interrupted.

In emergency operation the burner control unit regulates the boiler water temperature to 60 °C to maintain the operation of the heating system, until communications have been restored.

Clearing faults in emergency operation

In emergency operation faults can only be cleared via the reset button on the burner control unit. Clearing is only possible, if the fault is a locking fault.

▶ Press the reset button to clear the fault.

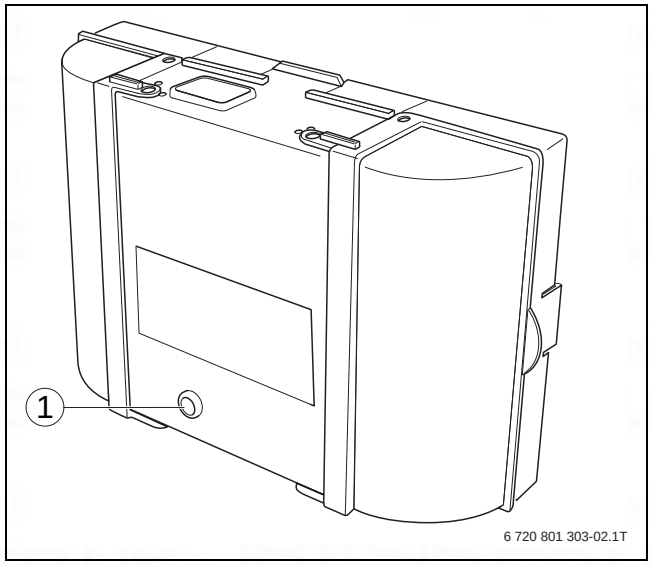

Fig. 72 Clearing a fault on the burner control unit

[1] Reset button

10.3 Operating and fault displays

10.3.1 Control unit status indicators

Fault code	Sub-code	Cause	Description	Test procedure/ cause	Corrective measure
2P	564	Temperature rises too quickly at the boiler temperature sensor (> 70K/min).	Heat exchanger protection due to excessively fast heat-up speed.	No or insufficient heat draw-off (e.g. thermostatic valves or mixers closed).	Ensure adequate heat draw-off
				Boiler circuit flow rate too low.	Install adequately sized pumps.
				Pump does not work.	Check whether the pump is being triggered. Replace the pump if required.
				Deposits on the water side of the boiler (dirt from the heating system, scaling).	Flush/clean the boiler block on the heating water side with agents approved for use with aluminium.
OA	-	Appliance in switching optimisation program.	A new burner demand occurs within the set switching optimisation time. Appliance is in standby period. The standard switching optimisation time is 10 minutes.	Check output setting on the BC10 basic controller.	Match the boiler output to the required heat demand of the building.
				Check the control setting at the RC35 user interface.	Match the control setting to the system conditions.
OH	-	The appliance is in standby, there is no heat demand.	The boiler is ready to operate and has no heat demand from the heating circuit.	-	-
OY	-	The current boiler temperature is higher than the set boiler water temperature.	The current boiler temperature is higher than the set boiler water temperature. The boiler is shut down.	-	-
OP	-	Waiting for the fan to start up.	The start-up needs to be detected for the sequence to continue.	-	-
OE	-	The appliance is in standby, there is an active heat demand, but an excess of energy is being supplied.	The current heat demand of the system is lower than that, which the minimum modulation level of the burner supplies.	-	-
OU	-	Start of the program sequence to start the burner.	-	-	-
OC	-	Beginning of burner start.	-	-	-
OL	-	Opening of the gas valve.	-	-	-
OF	-	Insufficient flow rate through the boiler.	Temperature differential between the flow and return > 15 K. Temperature differential between the flow and the safety temperature sensor > 15 K.	Check the flow temperature with the BC10, check the return temperature with the RC35 user interface or service key, measure the resistance of the boiler temperature sensor (high-limit safety cut-out) and compare it with the curve.	Adjust the setting of the boiler circulation pump. Check the surface temperature of the cast section, which is fitted with the safety temperature sensor, using a temperature measuring instrument. Check whether a cast section is blocked with dirt.

Table 23 Operating codes

10.3.2 Control unit fault displays

Type [1]	Fault code	Sub-code	Cause	Description	Test procedure/cause	Corrective measure
B	2E	207	Water pressure < 0.6 bar.	-	Check whether the pressure in the system is at least 1 bar.	Correct the operating pressure.
V	2U	533	Incorrect hydraulic connection of boiler or pump.	The boiler control unit has detected an incorrect flow on the water side.	Check whether the boiler flow and return have been accidentally swapped. Check pump for correct flow direction.	Connect the flow and return correctly. Ensure correct flow direction for the pumps.
B	2U	565	Excessive differential between the flow and return temperature. > 40 K	Heat exchanger protection due to excessive temperature spread.	Problems in the hydraulics.	Check the system hydraulics.
V	2U	575	Intelligent high-limit safety cut-out (ISTB) for the flow.	The actual boiler flow temperature reaches the intelligent high-limit safety temperature for the flow of 140 °C, and an ionisation current is detected or the solenoid valves are open.	Check the flow rate on the water side.	Ensure adequate flow rate. Replace the boiler temperature sensor/high-limit safety cut-out. Replace ignition/monitoring electrode.
V	3C	537	No speed.	There is no speed feedback message at the burner control unit, although the fan should be in operation.	Check the connecting lead between the burner control unit and the fan for faulty contacts, breaks and damage. Check the plug-in connectors at the burner control unit and fan.	Establish the contacts correctly. Replace cables if necessary. Replace the burner control unit.
V	3C	538	Fan speed too low.	The detected speed is lower than the specified speed.	Contamination in the fan.	Clean the fan if necessary.
					Fan faulty.	Replace the fan.
V	3C	540	Excessively high fan speed.	The detected speed is higher than the specified speed.	Check PWM signal/burner control unit for faulty contacts, breaks or damage. Check plug-in connectors for damage.	Establish the contacts correctly. Replace cables if necessary. Replace the burner control unit.
V	4A	520	ISTB in flow. (Intelligent high-limit safety cut-out)	The flow temperature has reached a value of 100 °C.	Since the temperature rise in the boiler is monitored by the boiler temperature sensor, and consequently the burner is switched off in good time, this fault display can not appear under normal circumstances. Unfavourable hydraulics in two-boiler systems: the boilers influence each other reciprocally, e.g. via the return or flow.	Check hydraulics.

Table 24 Fault displays
1) V = locking; B = blocking

Type [1]	Fault code	Sub-code	Cause	Description	Test procedure/cause	Corrective measure
V	4U	521	Sensor differential on the boiler temperature sensor between temperature sensors 1 and 2 is too high.	Temperature differential between temperature sensors 1 and 2 is too high(deviation > 5 K/ 2s).	Check whether the reset button on the burner control unit lights up.	Press the reset button on the burner control unit.
					Check whether the plug-in connectors at the boiler temperature sensor and the burner control unit are dirty or damaged.	If required, clean or replace the plug-in connectors.
					Check the resistance values at boiler temperature sensor against the table and visually check the plug on the temperature sensor.	If sensor values deviate from those specified or the plug is faulty, replace the boiler temperature sensor.
					Check the connecting lead for continuity.	If there are any breaks, replace the connecting lead.
V	4U	522	Short circuit between temperature sensors 1 and 2 at the boiler temperature sensor.	A temperature sensor fault was detected in test mode.	Check the sensor lead. Check the plug-in connector.	Replace if damaged. Clean if dirty or replace if necessary. Reconnect any loose plugs.
					Check the sensor values against the table.	Replace the temperature sensor, if there are any deviations from the table.
V	4Y	523	Interruption in the boiler temperature sensor.	Temperature too low at the boiler temperature sensor (< -5 °C)	Check the sensor lead.	Replace if damaged.
					Check the plug-in connector.	Clean if dirty or replace if necessary. Replace if damaged. Reconnect any loose plugs.
					Check the sensor values against the table.	Replace the temperature sensor, if there are any deviations from the table.
V	4U	524	Short circuit at the boiler temperature sensor.	An excessively high temperature (> 130 °C) is measured at the boiler temperature sensor.	Check the sensor lead.	Replace if damaged.
					Check the plug-in connector.	Clean if dirty or replace if necessary. Replace if damaged. Reconnect any loose plugs.
					Check the sensor values against the table.	Replace the temperature sensor, if there are any deviations from the table.
V	4A	575	ISTB (intelligent high-limit safety cut-out) responds.	The boiler flow temperature has reached its maximum permitted level.	High-limit safety cut-out has triggered.	Check the gas valve. (Does the flame extinguish after a controlled shutdown?)
B	5L	542	Incomplete communication with the burner control unit.	The MC10 generates this fault, if not all the required data is supplied by the burner control unit.	Check the cable connections between the burner control unit and the MC10.	If the connections are OK, replace the burner control unit.

Table 24 Fault displays
1) V = locking; B = blocking

Type [1]	Fault code	Sub-code	Cause	Description	Test procedure/cause	Corrective measure
B	5L	543	No communication with the burner control unit.	The MC10 is not receiving any data from the burner control unit. Consequence: quick flashing of the reset button on the burner control unit (= Emergency operation)	Check whether the cable plugs (BUS cable and power cable) between the burner control unit and the MC10 are correctly plugged in.	Reconnect any loose plugs.
					Check on the MC10 whether 230 V is present at the terminals of the "Mains automatic combustion cut-out".	Replace the MC10 if there are not 230 V.
					Check whether the connecting leads (Bus and power cables) between the burner control unit and the MC10 are damaged.	Replace connecting leads.
					Check whether the reset button on the burner control unit lights up green.	If the reset button does not light up, replace the burner control unit.
					Disconnect the Bus cable between the burner control unit and the MC10 and check whether the boiler runs in emergency operation (runs up to 60 °C boiler temperature).	If the boiler does not start up, replace the burner control unit.
					Check by replacing, whether the burner control unit or the MC10 is faulty.	Replace the burner control unit or MC10.
B	5L	543	No communication with the burner control unit.	The MC10 is not receiving any data from the burner control unit. Consequence: quick flashing of the reset button on the burner control unit (= Emergency operation)	If the reset button on the burner control unit does not light up, wait a certain period of time, since the appliance may not start up if the burner control unit is cold.	Wait for max. 30 minutes and check, whether the reset button on the burner control unit then lights up green again. If this is not the case, replace the burner control unit.
					Check whether the MC10 safety chain has triggered (terminal 17/18).	Determine the cause of safety chain triggering and resolve the problem. Then reset the relevant safety element.
B	6L	515	Ionisation signal failure during operation.	Ionisation signal failure during burner operation.	-	None, the burner control unit tries to start again
B	6L	514	Loss of flame within the flame stabilisation time.	No flame signal was detected within the stabilisation time.	-	None, the burner control unit tries to start again.
V	6C	576	Ionisation current within the pre-ventilation > 0.9 µA.	A flame signal was detected during the pre-ventilation phase.	Electrode dirty or faulty.	Clean the electrode and, if necessary, replace it. If replacing the electrode does not resolve the issue, the burner control unit must be replaced.

Table 24 Fault displays
1) V = locking; B = blocking

Type [1]	Fault code	Sub-code	Cause	Description	Test procedure/cause	Corrective measure
B	6A	577	No flame within the safety time.	Ionisation current within the safety time is < 1.1 µA.	Air in the gas line.	Vent the gas line.
					Back-pressure of the flue system is too high due to an unfavourable layout (too many deflections; cross-sections too small or too long; horizontal sections too long).	Size and route the flue system correctly.
					Inadequately sized gas line cross-sections (min. cross-section of the gas supply pipe).	Install adequately sized gas lines.
					The gas pressure regulator is not appropriate for the required gas volume.	Install a gas pressure regulator that is appropriate for the required gas volume and, if necessary, notify the gas supplier.
					Gas supply pressure too low.	Notify the gas supplier if the pressure is too low.
					Check the connecting lead between the burner control unit and the flame sensing electrode ionisation for poor contacts, breaks and damage.	Establish the contacts correctly. Replace cables if necessary.
					Check the connecting lead between the ignition transformer and ignition electrode for poor contacts (on electrode and transformer), breaks and damage.	Establish the contacts correctly. Replace the cable if necessary.
					Check the electrode clearances and ignition/ionisation electrode for damage.	Align burner rod or electrode. Replace faulty electrode.
					Ignition/ionisation electrode dirty.	Clean or replace ignition/ionisation electrode.
					Ignition transformer faulty (no ignition spark or delayed ignition spark, "hard start").	Replace the ignition transformer.
					Burner control unit faulty.	Replace the burner control unit.
V	6L	561	"Power up" 5 times (power interruption during burner start).	The burner control unit was switched off 5 times during the burner start.	Check the 230 V power supply to the control unit.	Reset the burner control unit at the reset button. Remedy the problem in the power supply.
B	7A	550	Undervoltage.	The mains voltage is too low.	The mains voltage must not fall below 195 V.	Ensure the correct power supply.
B	7A	551	Voltage interruption.	There has been a brief interruption in the mains voltage.	Check the mains cable for possible loose contacts. Check the wiring and correct contacts of the mains plug at the MC10 or burner control unit.	Remedy any contact problems.
B	7P	549	The safety chain has opened.	The continuity of the external components, which are integrated in the MC10 safety chain has been interrupted.	Check the continuity of the components.	If required, replace faulty components.

Table 24 Fault displays
1) V = locking; B = blocking

Type [1]	Fault code	Sub-code	Cause	Description	Test procedure/cause	Corrective measure
B	8L	579	No gas supply pressure	There is no gas supply pressure, although solenoid valve 1 is supposed to have opened. The burner makes three successive attempts at starting, then it waits for one hour before making three more start attempts.	Check that the gas isolator is open.	Replace the gas valve if required.
					Check whether there is any gas supply pressure.	Measure the gas supply pressure. Where required, Replace the gas valve.
V	8P	580	Solenoid valve 1 leaking	The valve test system has detected an unacceptably high leakage rate on solenoid valve 1.	Check the gas valve for contamination. Gas filter fitted.	Replace the gas valve.
V	8U	581	Solenoid valve 2 leaking	The valve test system has detected an unacceptably high leakage rate on solenoid valve 2.	Check the gas valve for contamination. Gas filter fitted.	Replace the gas valve.
V	9Y	500 501 502 503	Fault in the internal relay of the burner control unit.	Internal electronic fault in the burner control unit.	Press the "Reset" button and wait to see if the fault is eliminated.	If the fault remains after "Reset", the burner control unit must be replaced.
V	CY	566	Return temperature < -5 °C (interruption)	The control unit receives unrealistic values from the return temperature sensor.	Check the connecting lead between the burner control unit and the return temperature sensor.	Replace the connecting lead if necessary.
					Check the electrical connection of the connecting lead at the burner control unit and return temperature sensor.	Eliminate the contact problem if necessary.
					Check the resistance values of the temperature sensor against the table.	Replace the temperature sensor if necessary.
					Burner control unit faulty.	If the connecting lead, contacts and resistance values are all OK, replace the burner control unit.
V	CY	567	Return temperature > 130 °C (short circuit)	The control unit receives unrealistic values from the return temperature sensor.	Check the connecting lead between the burner control unit and the return temperature sensor.	Replace the connecting lead if necessary.
V	CY	567	Return temperature > 130 °C (short circuit)	The control unit receives unrealistic values from the return temperature sensor.	Check the electrical connection of the connecting lead at the burner control unit and return temperature sensor.	Eliminate the contact problem if necessary.
					Check the resistance values of the temperature sensor against the table.	Replace the temperature sensor if necessary.
					Burner control unit faulty.	If the connecting lead, contacts and resistance values are all OK, replace the burner control unit.
V	CO	568	Fault in the water pressure sensor (cable break).	Interruption of the water pressure sensor (voltage > 3.5 V).	Check the connecting lead running to the water pressure sensor.	Eliminate any interruption.
					Check the water pressure sensor.	Replace the water pressure sensor.

Table 24 Fault displays
1) V = locking; B = blocking

Type [1]	Fault code	Sub-code	Cause	Description	Test procedure/cause	Corrective measure
V	CO	569	Fault in the water pressure sensor (short circuit).	Short circuit in the water pressure sensor (voltage < 0.5 V).	Check the connecting lead running to the water pressure sensor.	Remedy any short circuit.
					Check the water pressure sensor.	Replace the water pressure sensor.
V	CY	573	Flow temperature < -5 °C (interruption)	The control unit receives unrealistic values from the flow temperature sensor.	Check the connecting lead between the burner control unit and the flow temperature sensor.	Replace the connecting lead if necessary.
					Check the electrical connection of the connecting lead at the burner control unit and the flow temperature sensor.	Eliminate any contact problems if necessary.
					Check the resistance values of the temperature sensor against the table.	Replace the temperature sensor if necessary.
					Burner control unit faulty.	If the connecting lead, contacts and resistance values are all OK, replace the burner control unit.
V	CY	574	Flow temperature > 130 °C (short circuit)	The control unit receives unrealistic values from the flow temperature sensor.	Check the connecting lead between the burner control unit and the flow temperature sensor.	Replace the connecting lead if necessary.
					Check the electrical connection of the connecting lead at the burner control unit and the flow temperature sensor.	Eliminate any contact problems if necessary.
					Check the resistance values of the temperature sensor against the table.	Replace the temperature sensor if necessary.
					Burner control unit faulty.	If the connecting lead, contacts and resistance values are all OK, replace the burner control unit.
V	LP	570	Too many resets via the interface.	Too many resets were carried out via the interface within a certain period. Please note: this fault can only be reset via the reset button on the burner control unit.	Faults present have been repeatedly reset but not eliminated.	Identify the cause of the faults, which have resulted in the resets, and eliminate them.
					The BC10 has developed a fault, which is causing constant resets.	Replace the BC10.
					The burner control unit has developed a fault.	Replace the burner control unit.
V	LL	571	Too many restarts despite resets.	15 restarts have occurred in direct succession. This means that the same problem persisted after the resets. Please note: this fault can only be reset via the reset button on the burner control unit.	Faults present have been repeatedly reset but not eliminated.	Identify the cause of the faults, which have resulted in the resets, and eliminate them.

Table 24 Fault displays
1) V = locking; B = blocking

Type [1]	Fault code	Sub-code	Cause	Description	Test procedure/cause	Corrective measure
V	EE	601	Boiler temperature sensor reading (twin sensors).	Successive measurements of the boiler temperature are too widely divergent.	Check the cable running to the boiler temperature sensor and the contacts at the burner control unit and pressure sensor. Check the plug-in connector.	Replace if damaged. Clean if dirty or replace if necessary. Reconnect any loose plugs.
					Check the sensor values against the table.	Replace the temperature sensor if there are any deviations from the table.
					Burner control unit faulty.	If the connecting lead, contacts and resistance values are all OK, replace the burner control unit.
V	EE	612	Readings of the return temperature sensor	Successive measurements of the return temperature are too widely divergent.	Check the cable running to the return temperature sensor and the contacts. Check the plug-in connector.	Replace if damaged. Clean if dirty or replace if necessary. Reconnect any loose plugs.
					Check the sensor values against the table.	Replace the temperature sensor if there are any deviations from the table.
					Burner control unit faulty.	If the connecting lead, contacts and resistance values are all OK, replace the burner control unit.
V	EE	613	Flow temperature sensor reading	Successive measurements of the flow temperature deviate severely from each other.	Check the cable running to the flow temperature sensor and the contacts. Check the plug-in connector.	Replace if damaged. Clean if dirty or replace if necessary. Reconnect any loose plugs.
					Check the sensor values against the table.	Replace the temperature sensor if there are any deviations from the table.
					Burner control unit faulty.	If the connecting lead, contacts and resistance values are all OK, replace the burner control unit.
V	4A	700		Condition when delivered from factory	Boiler is locked out	Rest the boiler using "Reset" (→ chapter 6.10, page 25)

Table 24 Fault displays
1) V = locking; B = blocking

10.3.3 Status indicator of the burner control unit.

The lighting of the reset button displays the current operating condition.

Operating condition	Colour code	Lighting of the reset button
Burner control unit is in operation	■.....	on
The burner control unit is in the locked-out fault status	■.....❍.....■.....❍.....■.....❍.....■.....❍.....■.....❍.....■.....❍.....	flashes slowly
The boiler control unit is in emergency operation, communication disrupted	■❍■❍■❍■❍■❍■❍■❍■❍■❍■❍	flashes quickly
The burner control unit is not in operation	❍.....	off

Table 25 Display of the operating condition of the burner via the lighting of the reset button.

... Permanently
❍ off
■ green

11 Appendix

11.1 Sensor curves

DANGER: Risk to life from electric shock.

- Isolate the heating system before taking any readings.

Always measure the temperatures being compared (flow, return and boiler temperature) near to the relevant sensor. Measure the resistance at the cable ends.

11.1.1 Temperature sensor at the burner control unit

	Resistance values of the temperature sensor at the burner control unit.		
Temperature [°C]	Minimum value [Ω]	Nominal value [Ω]	Maximum value [Ω]
5	23466.20	24495.00	25523.80
10	18770.80	19553.00	20335.20
15	15120.00	15701.00	16282.00
20	12245.80	12690.00	13134.20
25	9951.30	10291.00	10630.70
30	8145.40	8406.00	8666.60
35	6711.50	6912.00	7112.50
40	5560.60	5715.00	5869.40
45	4625.40	4744.00	4862.60
50	3866.90	3958.00	4049.10
55	3239.10	3312.00	3384.90
60	2730.20	2786.00	2841.80
65	2314.50	2357.00	2399.50
70	1969.90	2004.00	2038.10
75	1683.30	1709.00	1734.70
80	1444.90	1464.00	1483.10
85	1241.90	1257.00	1272.10
90	1073.10	1084.00	1094.90
95	927.60	938.90	950.20
100	805.20	815.90	826.60

Table 26 Resistance values

2 similar temperature sensors (twin sensors), which are installed in a single sensor casing, are used as boiler temperature sensors.
All temperature sensors in the boiler have the same sensor curve.

11.2 Flow resistance on the heating water side

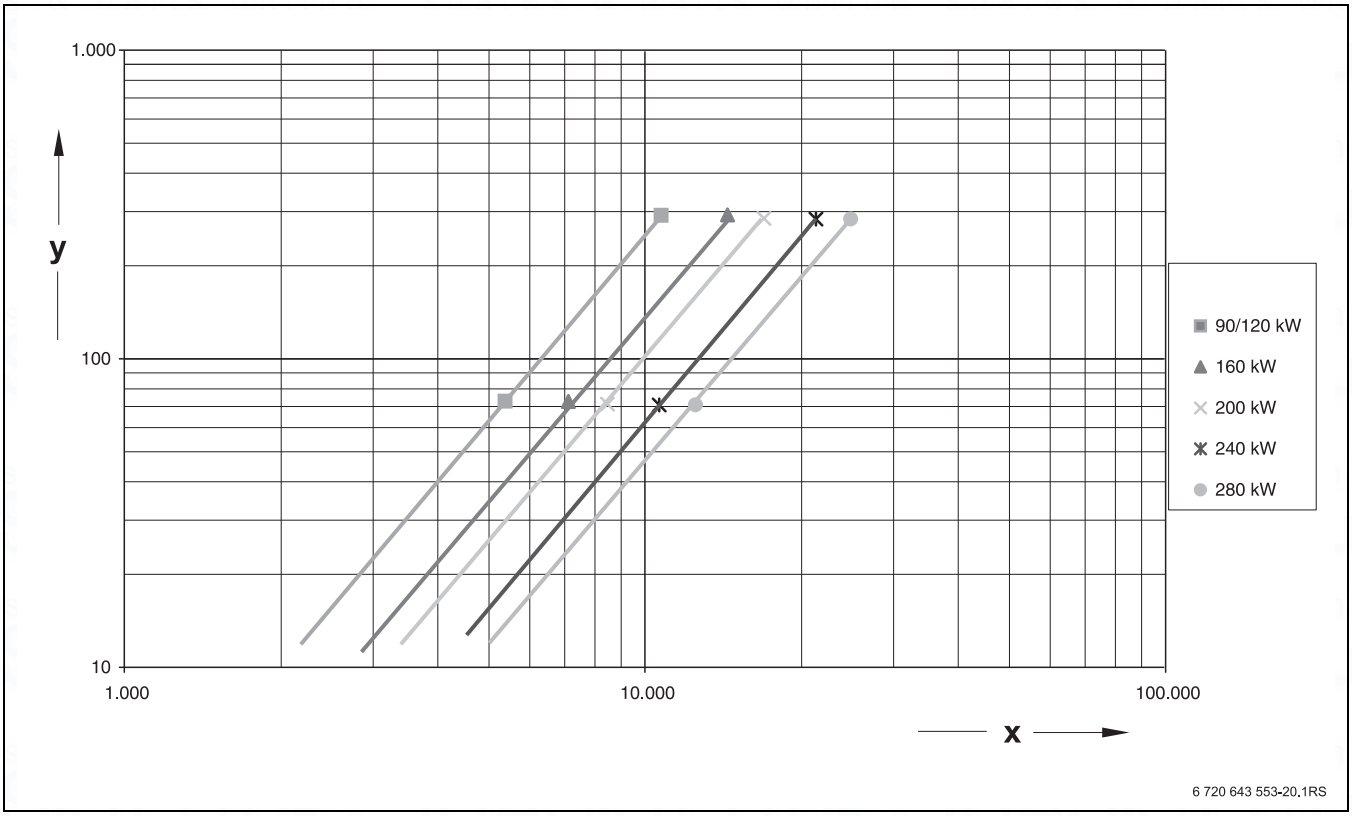

Fig. 73 Resistance on the heating water side without non-return valve

[x] Flow rate in l/h
[y] Pressure drop on the heating water side in mbar

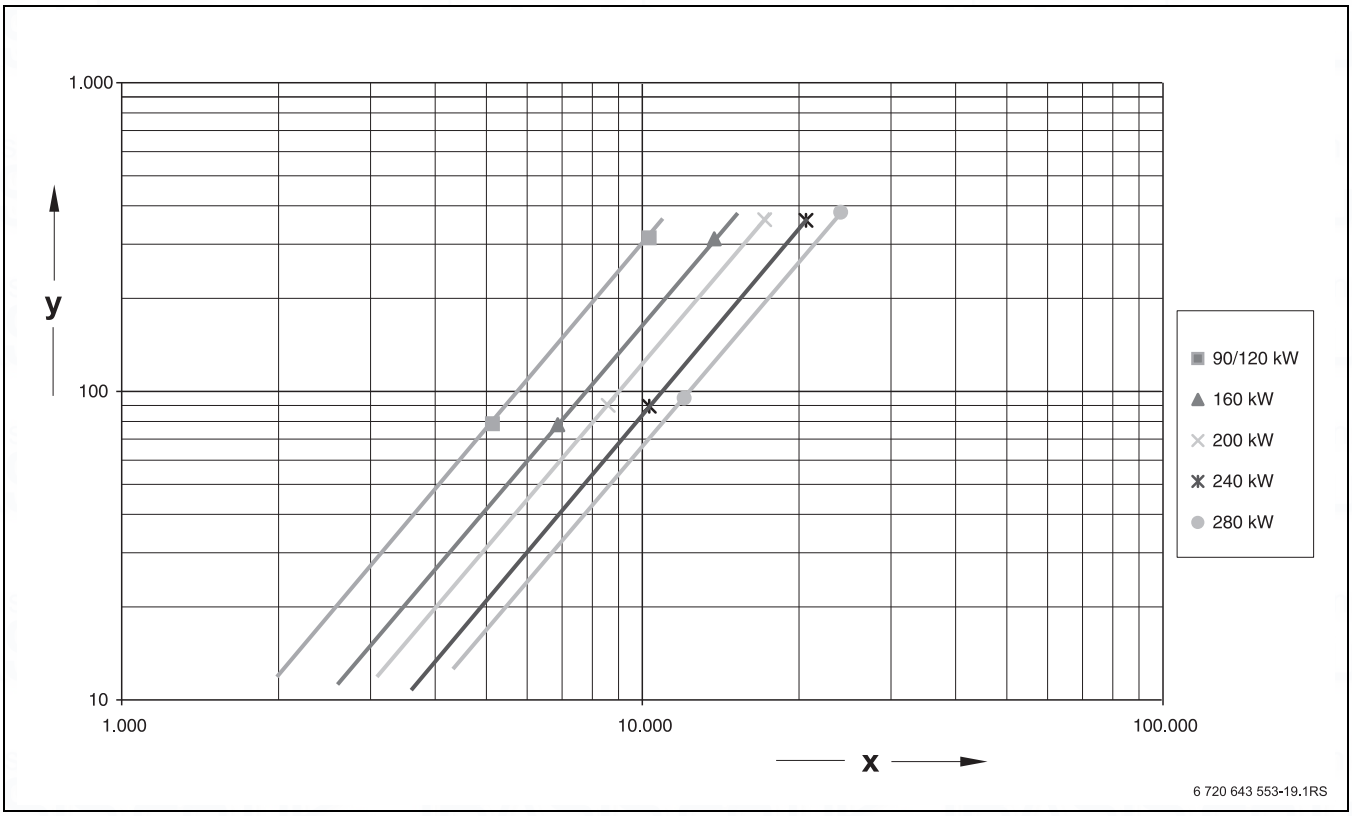

Fig. 74 Resistance on the heating water side with non-return valve (cascade)

[x] Flow rate in l/h
[y] Pressure drop on the heating water side in mbar

11.3 MC10 connection diagram

NOTICE: System damage with incorrect installation!

- Provide a permanent power supply (not a safety plug).
- Ensure that the power supply is connected to the correct phases.
- Select the installation, fuse/circuit breaker rating, ON/OFF switch, emergency stop switch and safety measures in accordance with local regulations.

DANGER: Risk to life from electric shock!

- Never use the earth conductor (green/yellow) as a control cable.

NOTICE: Fault due to power failure!

- When connecting external components to the MC10 control unit, ensure that these components do not exceed a total maximum power consumption of 5 A.

spares & parts online IBASIS.CO.UK

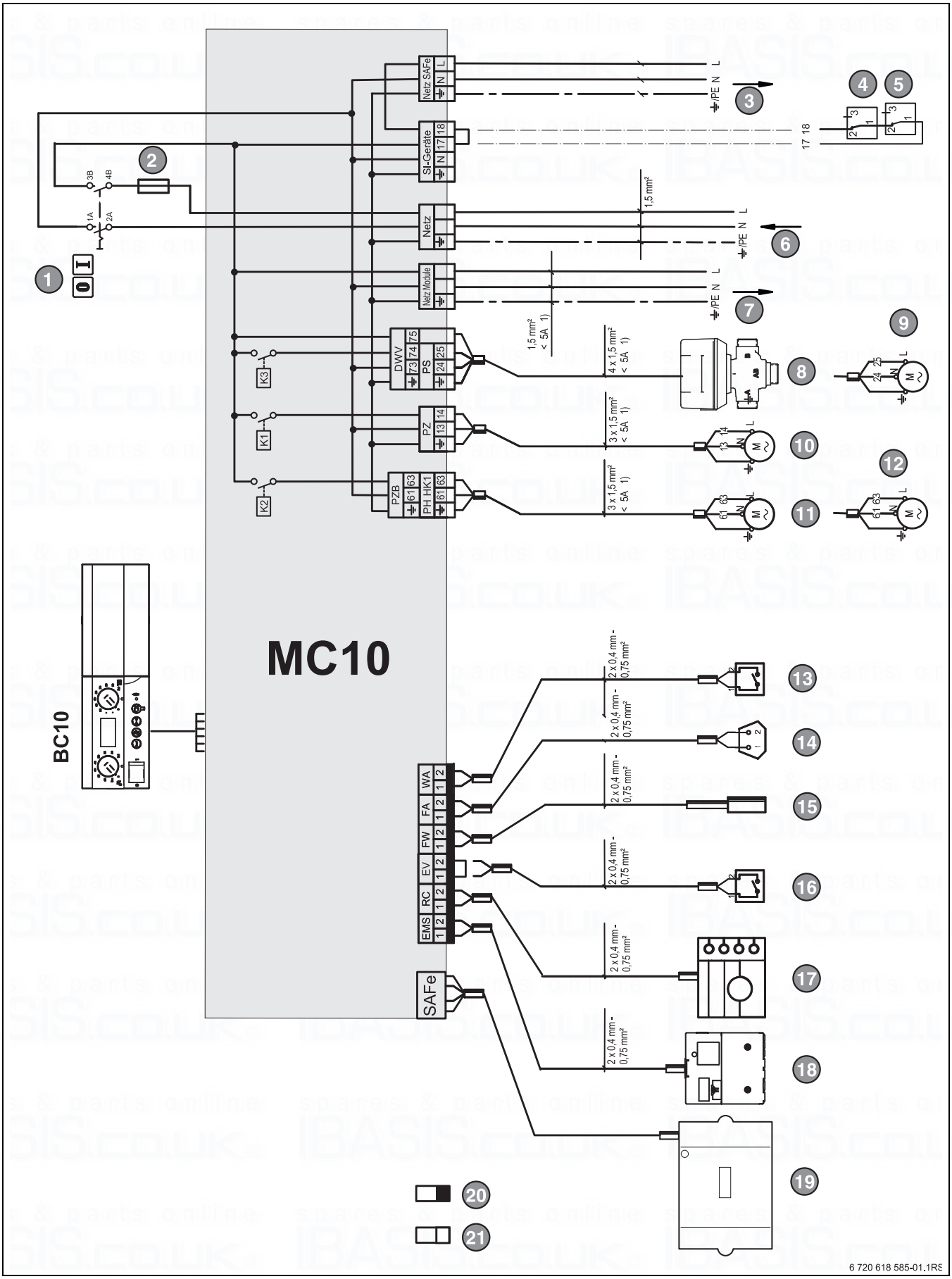

Fig. 75 MC10 connection diagram
1) The total current of all externally connected components must not exceed 5 A.

Key to Fig. 75 :

[1] On/Off switch
[2] Fuse, 10 AT
[3] Mains supply for SAFe40 or SAFe42 burner control unit, 230 V/50 Hz
Mains supply for SAFe42 burner control unit and fan, 230 V/50 Hz
[4] Component 1
[5] Component 2
[6] Mains entry
[7] Power supply for function modules, 230 V/50 Hz
[8] DWV 3-way valve
Terminal 73 blue
Terminal 74 black
Terminal 75 brown
[9] PS - Cylinder primary pump
[10] PZ - DHW circulation pump
[11] PZB - Feed pump
[12] PH-HK1 - Heating pump
[13] WA - Heat demand (external)
[14] FA - Outside temperature sensor
[15] FW - DHW temperature sensor
[16] EV - External interlock
(remove the jumper when connected)
[17] RC - user interface
[18] EMS - BUS cable EMS,
connection to function modules
[19] Burner control unit - Bus cable for burner control unit,
Connection to the burner control unit
[20] Low voltages
[21] Control voltage 230 V~

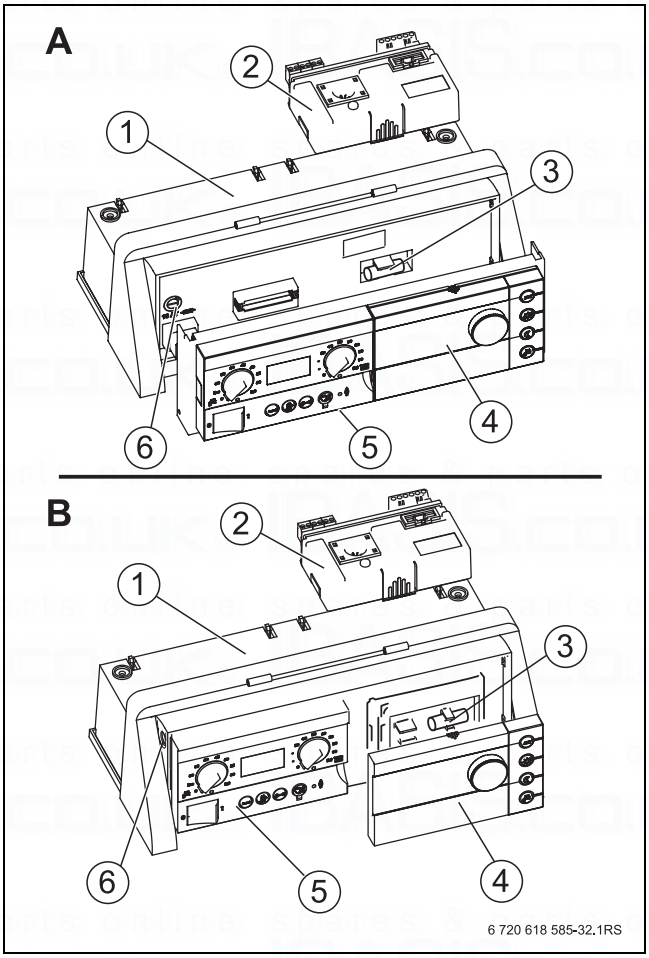

Fig. 76 Available versions of BC10

[A] Fuse inside the MC10
[B] Fuse inside the BC10 basic controller
[1] Logamatic MC10
[2] Function modules xM10
[3] Spare fuse 10 AT
[4] RC35 user interface or cover
[5] BC10 basic controller
[6] Appliance fuse 10 AT

11.4 Connection diagram of burner control unit

SAFe 40

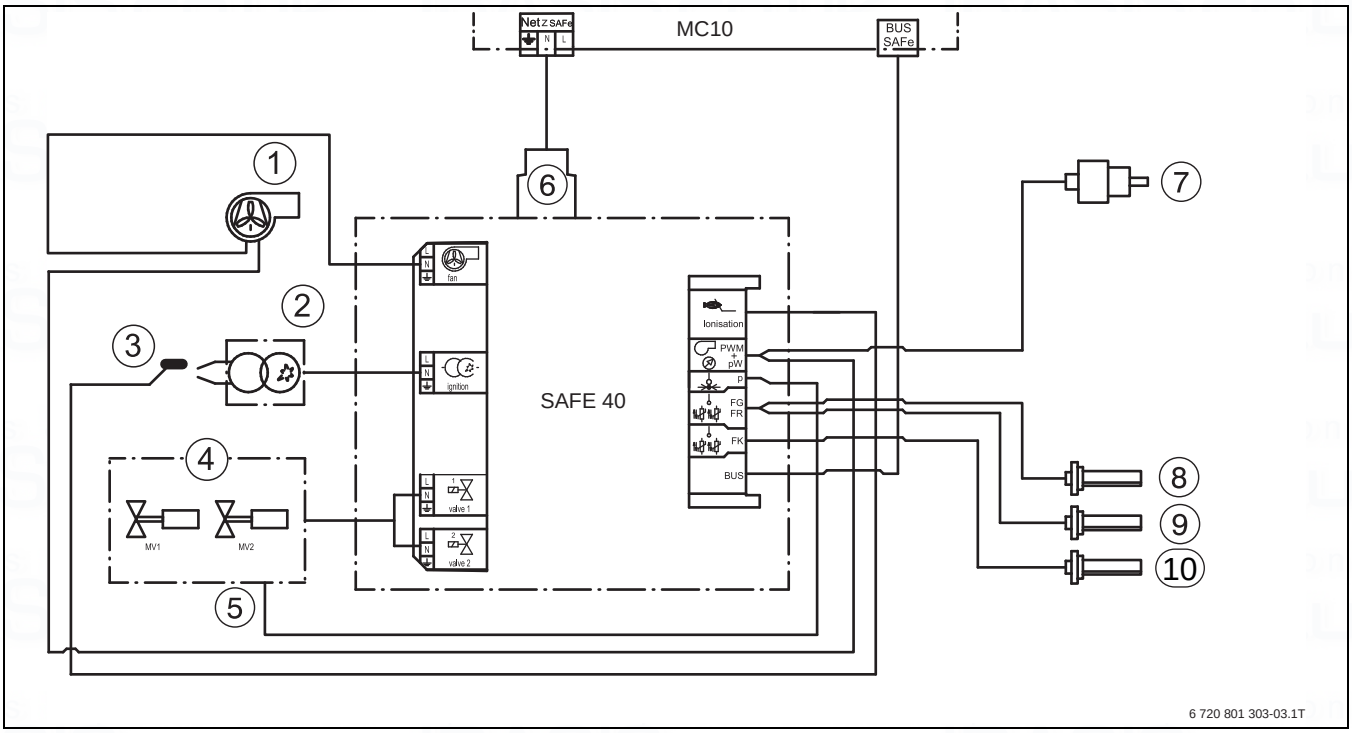

Fig. 77 Connection diagram of SAFe 40

SAFe 42

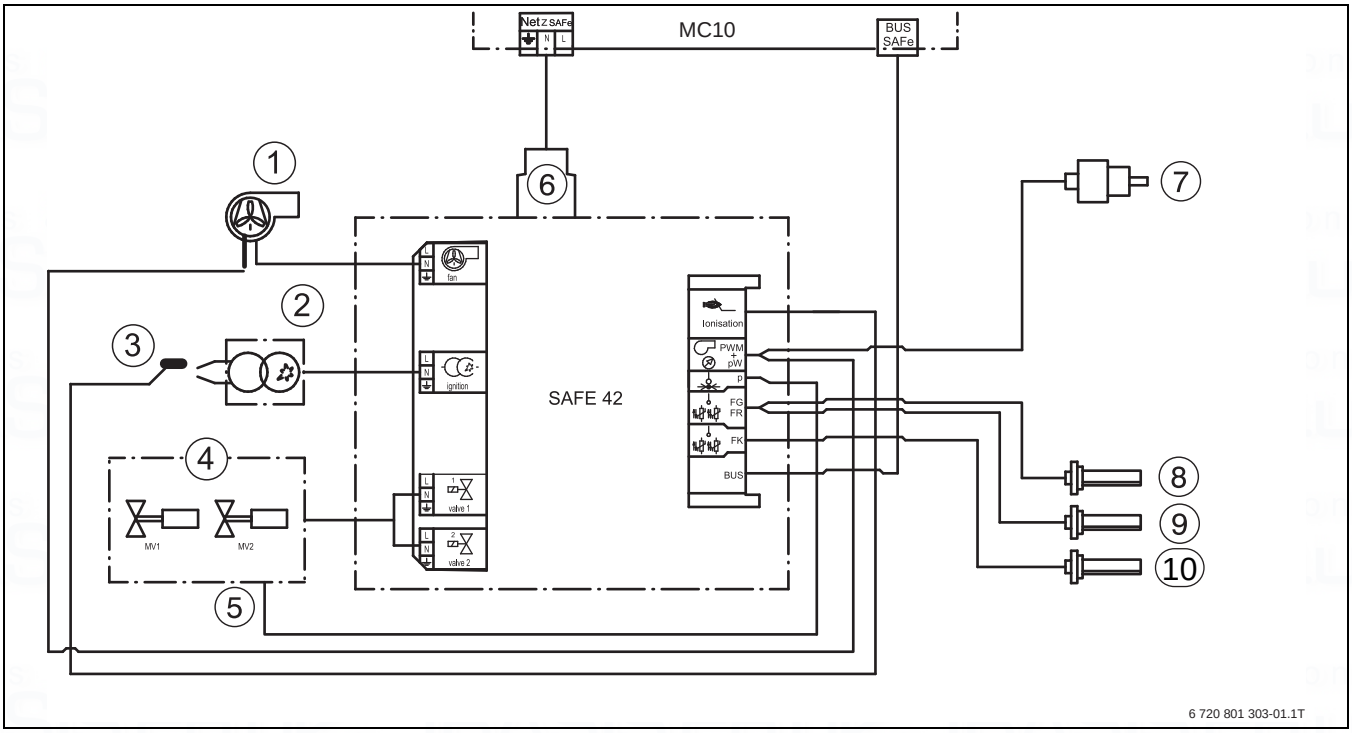

Fig. 78 Connection diagram of SAFe 42 (version for fan power supply via SAFe)

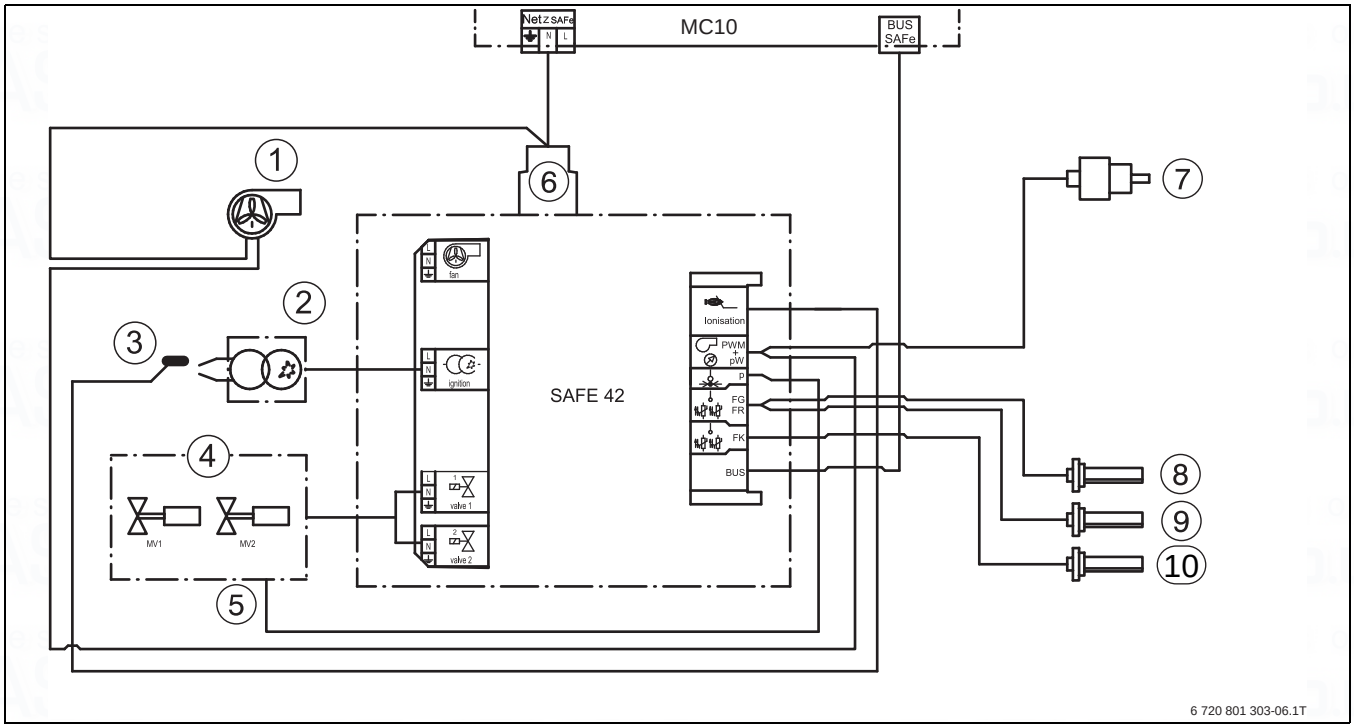

Fig. 79 Connection diagram of SAFe 42 (version for fan power supply via control unit)

Key to Fig. 77, Fig. 78 and Fig. 79:

[1] Fan (pulse width modulation signal)
[2] Ignition transformer
[3] Ionisation
[4] Gas solenoid valve (MV1/MV2)
[5] Gas pressure switch (200 kW – 280 kW)
[6] Mains entry
[7] Water pressure sensor
[8] Flow temperature sensor
[9] Return temperature sensor
[10] Boiler temperature sensor

11.5 Conversion of vol. – % CO_2 into vol. – % O_2 for burner setting

Depending on the nominal $CO_{2\,max}$ in vol. – % of the distributed gas, the given CO_2 default value can be converted into an O_2 default value according to the following formula:

$$O_2 = 20,95 \times \frac{CO_{2max} - CO_2}{CO_{2max}}$$

F. 1 Formula for calculating the O_2 value

[O_2] Default value of O_2 in vol. – %
[CO_2] Default value of CO_2 in vol. – %
[CO_{2max}] Nominal value of CO_{2max} for the distributed gas in vol. – %

Calculation example:
Default value for CO_2 = 9.1 vol. – %
Nominal value for CO_{2max} = 12.0 vol. – %

$$O_2 = 20,95 \times \frac{12 - 9,1}{12} \approx 5,1$$

F. 2 Calculation of the O_2 value

[O_2] O_2 value →5.1 vol. – %

▶ Request nominal $CO_{2\,max}$ in vol. – % with your gas supplier

If the specified values for $CO_{2\,max}$ and CO_2 are listed in the following table, the corresponding O_2 value can be read directly from the table.

Nominal $CO_{2\,max}$ for the distributed gas [vol. – %]	**11.4**	**11.5**	**11.6**	**11.7**	**11.8**	**11.9**	**12**	**12.1**	**12.2**	**12.3**
CO_2 default value for the burner setting [vol. – %]	**O_2 value [vol. – %]**	**O_2 value [vol. – %]**	**O_2 value [vol. – %]**	**O_2 value [vol. – %]**	**O_2 value [vol. – %]**	**O_2 value [vol. – %]**	**O_2 value [vol. – %]**	**O_2 value [vol. – %]**	**O_2 value [vol. – %]**	**O_2 value [vol. – %]**
8.5	5.3	5.5	5.6	5.7	5.9	6.0	6.1	6.2	6.4	6.5
8.6	5.1	5.3	5.4	5.6	5.7	5.8	5.9	6.1	6.2	6.3
8.7	5.0	5.1	5.2	5.4	5.5	5.6	5.8	5.9	6.0	6.1
8.8	4.8	4.9	5.1	5.2	5.3	5.5	5.6	5.7	5.8	6.0
8.9	4.6	4.7	4.9	5.0	5.1	5.3	5.4	5.5	5.7	5.8
9.0	4.4	4.6	4.7	4.8	5.0	5.1	5.2	5.4	5.5	5.6
9.1	4.2	4.4	4.5	4.7	4.8	4.9	5.1	5.2	5.3	5.5
9.2	4.0	4.2	4.3	4.5	4.6	4.8	4.9	5.0	5.2	5.3
9.3	3.9	4.0	4.2	4.3	4.4	4.6	4.7	4.8	5.0	5.1
9.4	3.7	3.8	4.0	4.1	4.3	4.4	4.5	4.7	4.8	4.9
9.5	3.5	3.6	3.8	3.9	4.1	4.2	4.4	4.5	4.6	4.8
9.6	3.3	3.5	3.6	3.8	3.9	4.0	4.2	4.3	4.5	4.6
9.7	3.1	3.3	3.4	3.6	3.7	3.9	4.0	4.2	4.3	4.4
9.8	2.9	3.1	3.6	3.4	3.6	3.7	3.8	4.0	4.1	4.3

Table 27 O_2-default values depending on the nominal CO_{2max} value (with the read-off example)

Read-off calculation:
Default value: CO_2 = 9.1 vol. – %
Nominal value: CO_{2max} = 12.0 vol. – %
Result: O_2 = 5.1 vol. – %

Index

A
Aligning 13
Appliance dimensions and weight 10
Automatic air vent valve 17

C
Cleaning the siphon 39
Condensate 14, 17
Connections on the water side 15

D
Disposal 33
Double nipple 18
Drain valve 18

E
Electrical data 10
Electrodes 40
Emergencies 33
Environment / disposal 33
Establishing the fuel supply 19

F
Frost 13
Full load adjusting screw 23

G
Gas supply pressure 29
Gas tightness test 42
Gas train volume 34

H
Heating water circuit 10

I
Ignition cable 38, 42
Installation location 13
Ionisation current 29, 42

M
Monitoring cable 38, 42

O
Old appliance 33

P
Packaging 33
Partial load adjusting screw 28
Permitted pressure drop 36
Pressure test nipple 24

R
Recycling 33
Reports, inspection and maintenance 43
Risk of frost 33

S
Safety 4
Sensor curves 54
Siphon 17

T
Tee 18
Test point in the flue pipe 29

U
Used appliances 33

V
Ventilation air connection elbow RLU (accessory) 15

W
Wet cleaning 39
Wobbe index 22

Notes

spares & parts online BASIS.co.uk

Buderus
Cotswold Way, Warndon, Worcester WR4 9SW

All Enquiries: 0330 123 3004

www.buderus.co.uk

In the UK and IE, Buderus is a brand name
of Bosch Thermotechnology Ltd.

Bosch Thermotechnik GmbH
Sophienstrasse 30-32
D-35576 Wetzlar
www.buderus.de
info@buderus.de

C & F Quadrant Ltd.
Unit L40 Cherry Orchard Industrial Estate
Cherry Orchard, Dublin 10
Tel.: 01.6305700
Fax.: 01.6305706 / 01.6305715
www.cfquadrant.ie
E-mail: sales@cfquadrant.ie

Buderus